Bharat Heavy Electricals Limited
ELECTRONICS DIVISION
Mysore Road, Bangalore – 560026 **Ph.080-26998392/8232**
Email ID: cjaka@bhel.in, kapilverma@bhel.in
PV – O&M Dept.

NOTICE INVITING TENDER

1	TENDER NUMBER(RFQ)	:	**EDN: PVSS: NTPC: KADIRI/50MWp: O&M**; Dt: 15.10.2020
2	NAME OF WORK	:	**Operation and Maintenance works of NTPC 50 MWp Solar Power Plant at Kadiri, Ananthapur, Andhra Pradesh for a period of 11 months. (All listed works shall be undertaken and executed)**
3	ESTIMATED COST	:	**Rs 64.42 Lakhs (Approx.) Plus applicable GST.**
4	EARNEST MONEY DEPOSIT	:	**Rs. 1.30 Lakhs (Mandatory for MSME also)** **(a) Bidders can submit Rs. 1.30 Lakhs EMD through DD/SBI Collect (Please refer point no.: 9 of "Instructions to tenderer" for guideline for payment through SBI Collect).**
5	SECURITY DEPOSIT	:	a) Security Deposit(SD) will be 5% of the work order amount b) 50% of SD shall be submitted before start of work c) Balance will be recovered from running Bills at a rate of 10% per bill. d) 50% of SD will be released after completion of all the works and remaining 50% after 6 months from the date of completion of all the works.
6	DURATION OF WORK	:	From the date of site handover for O&M, likely in November 2020 upto 07-10-2021 (11 months approx.)
7	LAST DATE AND TIME FOR THE SUBMISSION OF DULY FILLED IN TENDER DOCUMENT	:	26.10.2020 Before 01:00 P.M.
8	ADDRESS TO BE SUPERSCRIBED ON TENDER ENVELOPE	:	Mr. Chandrashekhar C Jaka, DGM, (PV- O&M) 5th Floor, New Engineering Building, BHEL- Electronics Division Mysore Road, Bangalore -560 026.
9	DATE AND TIME OF TECHNICAL BID OPENING	:	26.10.2020 at 01:30 P.M
10	**DATE AND TIME FOR SITE ININSPECTION.**	**:**	**SITE INSPECTION HAS TO BE CARRIED OUT PRIOR TO BID SUBMISSION. SITE INSPECTION REPORT SHOULD BE ENCLOSED ALONG WITH THE BID.** **(Please call to 8317595560 / 9448163998 for inspection)**

NOTE: The tenderer shall return the dully filled in tender document after affixing signature on all pages and submit. All clarifications regarding this tender will be published on the BHEL tender website.

Bharat Heavy Electricals Ltd
Electronics Division
Mysore Road, Bangalore – 560026

Tender Document for

OPERATION AND MAINTENANCE WORKS OF NTPC 50 MWp SOLAR POWER PLANT AT KADIRI, ANANTHAPUR, ANDHRA PRADESH FOR A PERIOD OF 11 MONTHS.

TENDER NUMBER RFQ EDN: PVSS: NTPC: KADIRI/50MWp: O&M; DATE : 15.10.2020

TECHNICAL BID DATE OF OPENING: 26-10-2020 (Price bid opening date intimation will be given separately)

Part – I	Technical cum Commercial Bid	……	33 Pages
	Unpriced Bid NTPC 50 MWp	…….	03 Pages
	TECHNICAL SPECIFICATIONS	…….	05 Pages
	BHEL General Conditions of Contract 2019	…….	33 Pages
	Bank Guarantee format	……	02 Pages
Part – II	Price Bid NTPC 50 MWp	…….	03 Pages

Note:

1. Part – I: To be submitted in a separate sealed cover.
2. Part – II: To be submitted in a separate sealed cover.
3. Earnest Money Deposit of Rupees 1.30 Lakhs shall be submitted as per point No. 4 of page No. 1 of this tender document.
4. Tenders will be liable for rejection if the above mentioned EMD is not submitted along with the tender.
5. Part-I, Part-II, Tender EMD sealed covers should be put in outer envelope and super scribing the Name of work and Name & Address of the Tenderer.
6. Firms banned by BHEL are not eligible to participate in the tender. Any bidder on whom Show Cause Notice / Risk & Cost action initiated / implemented in last 2 years from tender opening date are not eligible for participation in this tender The tender envelope submitted by such a firms/bidder will not be opened for evaluation and no communication in this regard will be entertained.

BHARAT HEAVY ELECTRICALS LTD, ELECTRONICS DIVISION, BANGALORE-26

TENDER NUMBER RFQ: EDN: PVSS: NTPC: KADIRI/50MWp: O&M; DATE 15.10.2020

PART-I TECHNICAL-CUM-COMMERCIAL BID
(To be furnished by the Bidders)

01. NAME OF THE WORK : **Operation and Maintenance works of NTPC 50 MWp, Solar Power Plant at Kadiri, Ananthapur, Andhra Pradesh for a period of 11 months.**

02. APPROXIMATE ESTT.COST RS. : Rs. 64.42 Lakhs (approx.) Plus applicable GST.

03. DURATION OF WORK : From the date of site handover for O&M, likely in November 2020 upto 07-10-2021 (11 months approx.)

04. NAME OF THE CONTRACTOR :

05. ADDRESS

(A) OFFICE :

E-mail :

TEL. PH. NO. :

(B) RESIDENCE :

TEL.PH NO :

06. PAN NO :

07. GST NO :

08. STAFF STRENGTH :

09. DOCUMENTS FULFILLING TENDER PRE-QUALIFICATION CRITERIA : **E**nclosed / Not enclosed

10. a) SCOPE OF WORK (As per schedule of items) : UNDERSTOOD/ NOT UNDERSTOOD

b) Accept to execute all activities of Schedule of works : YES/ NO

c) Full acceptance to all points mentioned in "Notes" under Schedule of works : YES/ NO

11. a) EMD PARTICULARS (DEMAND DRAFT/ SBI COLLECT REF NO. / BG DETAIL) :

b) Electronic Funds Transfer (EFT) form enclosed : Please fill up the form in ANNEXURE-II

12. Penalty as per BHEL General conditions of contract 2019 clause No. 2.7.9 : Understood / Not Understood

O&M activities are defined item-wise with particular rate.
In case vendor does not execute any of the jobs within 30 days,
BHEL reserves the option to execute the same themselves and
the cost incurred will be deducted from the vendor's bills.

13. Constitution of Firm : Individual / Sole Proprietorship Concern / Partnership Firm / Public Ltd. Company/ Private Ltd. Company.

15. Accept to pay statutory payments like ESI, PF etc., as per terms and conditions of BHEL and Govt. guideline's : Accepted / Not accepted

16. BHEL Payment terms acceptance (Cl. no. 21, 22.1 & 22.2 of "Special Conditions of Contract") : Accepted / Not accepted

17. **O&M Contractor shall have to fill at least 65% of post in supervisory and managerial cadres and 80% of posts in other cadres by the local persons. The expression "Local person " shall mean a person domiciled in Andhra Pradesh state for minimum 15 years shall be considered as local person. The Contractor shall furnish documentary evidence to this effect before start of O&M** : Accepted / Not accepted

Note:

1. **Bidders are advised to quote their best prices (% above/below the total estimate +/- (or) at par).**
2. **BHEL shall be resorting to Reverse Auction (RA) (Guidelines as available on www.bhel.com) for this tender. RA shall be conducted among all the techno-commercially qualified bidders. Price bids of all techno-commercially qualified bidders shall be opened and same shall be considered as initial bids of bidders in RA. In case any bidder(s) do(es) not participate in online Reverse Auction, their sealed envelope price bid along with applicable loading, if any, shall be considered for ranking.**

PRE QUALIFICATION CRITERIA

1. Average annual financial turnover during the last 3 years ending 31st March of the previous financial year, should be **30% of the NIT value**. Bidder shall submit the audited balance sheets for past 3 years. In case, audited balance sheet is not available for current year, unaudited balance sheet is acceptable.

2. Experience of having successfully completed similar works during last 7 years ending last day of previous month to the one in which applications are invited should be either of the following:

   a. Three similar completed works costing not less than the amount equal to 40% of the estimated cost.
   b. Two similar completed works costing not less than the amount equal to 50% of the estimated cost.
   c. One similar completed work costing not less than the amount equal to 80% of the estimated cost.
   "Similar work" is defined as contract which includes Operation and Maintenance / Electrical Installation & Commissioning of Power Plants / Sub Stations of voltage level 33KV and above, in India.

   Overall contract value will be considered for each similar work irrespective of the O&M / I&C value. As evidence to this, the vendor shall submit (a) Copies of work orders from the clients, (b) Completion Certificate from client/client certified invoice.

3. Any vendors, against whom, action due to non-performance has been initiated by BHEL are not eligible for participation. The tender envelope submitted by such a firms/bidder will not be opened for evaluation and no communication in this regard will be entertained.

4. The bidders presently working at BHEL sites should submit the satisfactory performance certification issued by BHEL not earlier than 60 days reckoning from the date of tender opening.

Note: Offers of the Tenderers not meeting the above requirements are liable to be rejected.

Documents required to be submitted

1. Certificate of Incorporation of the Bidder's company.
2. Registration Certificate with ESI and PF Authority/Declaration.
3. Income Tax Returns for last Three years
4. Balance Sheet and Profit & Loss Account for the last 03 years signed by auditor.
5. Availability of Technical personnel in letter head.
6. Registration with BHEL/CPWD/other Govt. organization/PSU if any.
7. Declaration for fulfilling the BOCW requirements in bidder's letter head if any.
8. List of equipment to be mobilized at site in bidder's letter head.
9. GST Registration details or Declaration in bidder's letter head.
10. Declaration by bidder's for not blacklisted and/or not banned by any PSU's (or) Government institutions/organizations (or) semi-Government institutions/organizations in bidder's letter head.

All the supporting documents to be signed and sealed by the bidder (BHEL have the rights to verify the original documents if required)

INFORMATION TO THE TENDERER:

(i) The Bidders is advised to visit the site and examine the site conditions, but not limited to traffic, location, surroundings, climate, access to site, applicable laws and regulations, and obtain for itself on its own responsibility of all information, as per their understanding, as may be necessary for preparing the Bid and entering into the Contract Agreement. All the expenses in this regard for the subject Solar plant and its associated costs shall be borne by the Bidder.

(ii) The bidders should carry out preliminary survey at the site before submission of offer to ensure that the rate quoted for the relevant schedule of items are correct and submit the competitive price.

(iii) The bidder should encourage to use local labour that has the necessary skills as per the requirement of work.

(iv) Contractor to note, BHEL reserves the right to get any part of the work done through other agency or deploy BHEL's own/hired/otherwise arranged resources, at the risk and cost of the contractor after due notice of a period of two weeks by BHEL, in the event of:

a) Contractors continued poor progress.
b) Withdrawal from or abandonment of the work before completion of the work.
c) Contractor's inability to progress the work for completion as stipulated in the contract.
d) Poor quality of work.
e) Corrupt act of Contractor.
f) Insolvency of the contractor.
g) Persistent disregard to the instructions of BHEL.
h) Assignment, transfer, sub-letting of contract without BHEL's written permission.
i) Non fulfillment of any contractual obligations, Non-compliance to any Statutory laws / regulations of the land.
j) In the opinion of BHEL, the contractor is overloaded and is not in a position to execute job as per required schedule.

(v) The liquidated damages/penalties arising out of Risk and Cost will be recovered. BHEL shall recover the amount from any money due from the Contractor, or from any money due to the contractor including security deposit or by forfeiting any T&P asset or material of the contractor under this contract or any other contract of BHEL or by any other means or any combination thereof.

(vii) **Documents to be submitted on award of work (as applicable):**

a) Security deposit in the form of Cash/DD/ NSC's / Kisan Vikas Patra / FDR / Bank Guarantee in favour of BHEL

(b)Electronic Fund Transfer Form duly signed & sealed by banker along with cancelled cheque copy

(c) Labour license of the workmen engaged, valid for contract period (If applicable)

(d) Workmen Compensation Insurance Policy for the workmen engaged and valid for contract period

(e) Deduction of statutory taxes (as applicable) at source would be enforced from the running bills at the rates prescribed unless exemption certificate is produced from the concerned authorities.

The following documents are to be submitted along with the Running Account Bills for process of payment

a) Tax Invoice with details of GST number of BHEL and contractor.
b) Measurements of works executed, duly verified by Site in charge / Project manager of BHEL and signed as Accepted by contractor along with the stipulated O&M formats.
c) Provident PF Remittance challan for the bill duration.
d) ESI Remittance challan for the bill duration.
e) Invoice submitted along with running bills to indicate the GST amount charged and bear GST NUMBER etc. as per prevailing taxes.

Bill submitted subsequently to be accompanied with a declaration that GST liability on the earlier bill has been discharged.

i) by paying money to the Government (along with Tax paid Challan Copy)
ii) by utilization of Input GST Credit

f) BOCW Registration and payment proof if applicable.
g) O&M reports (as applicable) as per instruction of Engineer In-charge.

Bharat Heavy Electricals Limited
ELECTRONICS DIVISION
MYSORE ROAD- BANGALORE-26
INSTRUCTIONS TO TENDERER

1. Sealed Tender for the above noted work is hereby invited from Contractors experienced in similar Operation & maintenance works of Solar power plants with 33KV switchyard.
2. Project detail and location:

Project Name	**50 MWp Solar Power Plant**
Owner	M/s NTPC
Location	Kadiri, Ananthapur, Andhra Pradesh

3. **Tenders should be addressed to: Mr. Chandrashekhar C Jaka, DGM, (PV- O&M), NEB 5th Floor, Electronics Division, Bharat Heavy Electricals Limited, Mysore road, Bangalore – 560 026. In three separate sealed cover for "Technical cum Commercial Bid", Price Bid & EMD duly super scribed and put in an outer envelope, super scribing the Name of work, Tender no. and Name and address of the Tenderer.**
4. The local address of the Contractors, the name of the person to whom all the Correspondence are to be addressed should be indicated, with email id, telephone/mobile number (both office and residence).
5. All entries in tender documents should be in one ink (preferably blue ink). Erasing and overwriting is not permitted. All corrections should be duly signed by tenderer concerned.
6. Tenderers shall fill in all the required particulars in the blank space provided for this purpose in the tender documents and also sign in each and every page of the tender document including the drawings if any attached there before submitting tender.
7. Percentage above or below estimate should be quoted in figures as well as in words in Indian Currency only i.e. Rupees and Paisa with reference to overall cost shown in the attached schedule. These rates shall be for the finished work at site. The rate shall include all taxes and duties payable on account of, Octroi, tax etc except GST. on work contract etc., and also expenses towards PF and ESI contributions.
8. In case the rate quoted in figures differs from those quoted in words, the lower of the rates quoted will be taken as the tendered rate and shall be binding on the tenderer.
9. The rate to be quoted by the tenderer shall be firm and shall cover and include all statutory levies such as "Octroi, etc except GST, arising from Act passed by Parliament or State Legislature and rules framed there under. The rates shall further be deemed to include statutory levies arising from such Acts, Central or State, which may come into force, subsequent to submission of tenders.
10. (a) The rate quoted in the tender shall remain valid for a period of 'THREE MONTHS' from the date of opening tender.
    (b) Tenderer shall not increase quoted rates, once the tenderer has submitted offers/quotation/price and during execution of contract in case tender is accepted.
    (c) Successful bidder should execute the work strictly in accordance with Tender schedule quoted rates as accepted by BHEL.
    (d) **PRICE VARIATION clause not applicable**.
11. The rates quoted should be excluding GST arising on the transaction. If BHEL is required to discharge the liability of any taxes on the transaction like TDS(IT), TDS(WCT), TDS(GST) (as applicable) under reverse charge mechanism or any other similar taxes, which is or becomes payable by BHEL, the same shall be deducted from the bills of the contractor. **The rate/Percentage quoted by bidder shall be excluding GST which shall be shown separately in price bid.**
12. Quantities shown in the schedule are only approximate and are liable to variation without entitling the Contractors to any compensation.

13. Before tendering, the tenderer is advised to inspect the site of work and its environments and be well acquainted with the actual working and other prevailing conditions, position of material, Condition of each equipment and extent of repair / replacements to be carried out and labour work involved. They should be well versed with BHEL General Conditions of Contract instruction to the tenderers, drawing and specification and all other documents which form part of the agreement to be entered into, subsequent to award of work. The tenderer should be specially note that it is tenderers responsibility to provide any items which is not specifically mentioned in the specifications and drawing, but which is necessary to complete the work.

14. Details and quantities of each item of work shown in the bill of quantities attached here to only approximate. They are given as a guide for the purpose of tendering only and are liable for variation and alteration at the discretion of the competent authority. The work under each item as executed to the satisfaction of the engineer in charge and records/reports to be submitted by the Contractor.

15. Should a tenderer find discrepancies or omission in the drawing attached to the tender documents or should be in doubt as to their meaning he should at once address to the authority inviting the tender for clarifications. Every endeavor is made to avoid any error which can materially affect the basis of the tender but successful tenderer shall take upon himself to provide for the risk of any error which may be subsequently discovered and shall make no subsequent claim on account thereof.

16. In the event of the tender being submitted by a firm the tender must be signed separately and legibly by each partner or member of the firm or in their absence, by the person holding the power of Attorney on behalf of firm concerned. In the latter case, a copy of the power of Attorney duly attested by a Gazette Officer must accompany the tender.

17. If in any case, the date of Tender Opening falls on holiday, the Tender will be opened on the next working day.

18. Every tender must be accompanied by Earnest Money Deposit. This earnest money will be refunded to the unsuccessful tenderer after finalization of the award of work. In the case of successful tenderer, the earnest money will be retained as a part of Security Deposit for satisfactory completion of the work in accordance with Clause-16 of BHEL General Conditions of the Contract. Tenders without Earnest Money Deposit receipt are liable to reject. No interest will be paid on the earnest money deposit.

19. The Earnest money deposit may be furnished as

a) Demand Draft in favour of BHEL EDN, Bangalore – 560026.

b) The Earnest money deposit may be furnished through online from SBI Collect.

<u>Guidelines for payment of EMD Fee</u>

Step-1: Please enter the following link in your internet address browser or click on the following link.
https://www.onlinesbi.com/sbicollect/icollecthome.htm
Please click on"proceed" after Clicking "Check Box" to proceed for payment

Step-2 : Now the SBI's SB-Collect site gets opened. Please select State of Corporation as " Andhra Pradesh" and type of Corporation as " Industry" and then click on "Go" appearing on the screen.

Step-3 : Now select " Bharat Heavy Electricals " from the dropdown table appearing against "Industry Name" and click Submit

Step-4: Now select " Others " from the dropdown table appearing against "Category" and click Submit

Step-5: The below screen (similar) will appear. Please select sub category "EMD" and fill up other details and transfer money.

State Bank Collect / State Bank Collect

State Bank Collect

BHARAT HEAVY ELECTRICALS LTD
BHEL HOUSE, SIRI FORT, NEW DELHI-110003

Provide details of payment

Select Payment Category *	OTHERS
SUB CATEGORY *	--Select SUB CATEGORY--
NAME *	
VENDOR CODE	
AMOUNT *	
Remarks	

Please enter your Name, Date of Birth **(For Personal Banking) / Incorporation (For Corporate Banking)** & Mobile Number. This is required to reprint your e-receipt / remittance(PAP) form, if the need arises.

Name *	
Date of Birth / Incorporation*	
Mobile Number *	
Enter the text as shown in the image *	87E21

20. For reimbursement of Earnest Money Deposit, the tenderer should fill the enclosed EFT form, obtain the Banker's signature and also enclose a photocopy of cancelled cheque leaf.
21. Unless the bidder whose tender is accepted, signs contract agreement within fifteen days (15 days) of the date of the order directing to do so, the amount of Earnest Money Deposit (EMD)will be forfeited and acceptance of the tender will be withdrawn.
22. If after opening of tender, a tenderer revokes the tender or increase of earlier quoted rates or after acceptance of his tender does not commence the work in accordance with the instruction of Engineer-in-charge, the Earnest Money Deposited by bidder will be forfeited and acceptance of bidder's tender will be withdrawn.

    If only a part of work included in the tender had been awarded to the tenderer, the amount of Earnest Money to be retained will be based on value of the contract so awarded.
23. The BHARAT HEAVY ELECTRICALS LIMITED reserve the right to reject any or all the tenders received or accept any tender or part thereof without assigning reason thereof. In the case of acceptance of a part of tender, the time for completion may also be reduced to the extent considered necessary by the accepting authority.
24. Conditional and Unsigned tenders, tenders which are incomplete or otherwise considered defective, tenders which are not in accordance with the tender conditions laid down by the accepting officer and tenders not submitted in the prescribed forms are liable to be rejected.
25. Tenderer shall submit Solvency Certificate for the value specified from a Bank of standing regarding the tenderer's financial position (as applicable).
26. The tenderers should enclose relevant documents regarding constitution of firm i.e. Individual / Sole Proprietorship Concern / Partnership Firm / Public Limited Company / Private Limited.

27. The tenders should be enclosed with a list of contracts already held by the tenderer at the time of submitting the tender and giving the following particulars:
    a) Name of the work, value and address.
    b) The balance work remaining to be done on the same.
28. a) The filled in tender sealed cover shall be handed over/couriered/speed post to at office of **Mr. Chandrashekhar C Jaka, DGM, (PV- O&M) NEB 5th Floor, Electronics Division, Bharat Heavy Electricals Limited, Mysore road, Bangalore – 560 026,** before the time fixed for submission of tender.
    b) Tenders received after the due date & time of opening of tenders will be rejected.
29. The Contractors responsibility under this contract shall commence from date of receipt of the order or acceptance of tender.
30. Tenders submitted by speed post or courier service shall be posted with due consideration of any delay in postal delivery. Tenders received after the due date of opening tenders are liable to be rejected.
31. If proprietor or partner of a firm expires after the submission of tender or after the acceptance of tender, BHEL reserves the right to cancel the contract if the character of the firm undergoes a substantial change.
32. THE BHARAT HEAVY ELECTRICALS LIMITED will not be bound by any power of Attorney granted by the tenderer or changes in the composition of firm made subsequent to signing of the contract. They may however recognize such power of Attorney and changes after obtaining proper legal advice.
33. If the tenderer deliberately gives wrong information on tender regarding past unsatisfactory performance with BHEL sister units or any other Customer / clients, BHEL reserves the right to reject such tender at any stage including contract execution period and initiate penal action against the bidder as deemed fit.
34. Words imparting the singular number shall also be deemed to include the plural number and vice-versa where the context so require.
35. The General and Special Conditions are complementary to each other and where they are in conflict, the special condition shall prevail.
36. The expenses for completing the stamping agreement shall be borne by the contractor.
37. Unless or otherwise stated above tendered work includes men, material, machine and commissioning of equipment as agreed to in the contract.
38. After completing of the job, the contractor has to furnish actual drawings of work done in consultation with Engineer-in-charge.
39. Any covering letter and comments of the tenderer should be submitted along with the offer.
40. Cement and steel for carrying out Civil Works will have to be procured by the Contractor. Materials shall be accompanied with Test certificates and connected dispatch documents for proof of source from approved manufacturer's works or stockyard. The Contractor shall provide all the materials needed for trial run, testing including chemicals, consumables etc. In quoting their rates, the Contractors are advised to take into account the cost of the above materials. All the construction materials should be approved by BHEL before commencement of work.
41. Contractor are required to follow Field Quality Plan (FQP) for Civil construction as approved by BHEL/customer in respect of Tests to be carried out and reports and documents to be furnished.
42. Should a tenderer or a contractor has a relative or in the case of firm or company, any of its shareholder's relative is employed in Bharat Heavy Electricals Limited, the authority inviting tenders

shall be informed of this fact at the time of submission of the tender, failing which tender may be disqualified or if such fact subsequently comes to light.

43. These 'INSTRUCTIONS TO TENDERER' & GENERAL CONDITIONS OF CONTRACT OF BHEL' shall be deemed to form an integral part of the Contract agreement for the work to be entered into. The Contractor has to scrutinize the same, and when submitting his tender, indicate his acceptance of both. In cases of variation between the two in any matter, the conditions in the 'THE INSTRUCTIONS TO TENDERER' shall prevail. (Extracts of important clauses of BHEL GCC are enclosed).

44. All operations to be carried out by the Contractor during the execution of the contract such as drilling, welding etc., shall be done with proper equipment to be brought by the tenderer. Contractor shall make his own power and water supply.

45. The Contractor shall comply with the provision of Employees Provident Fund's and **miscellaneous Provisions Act 1952** and rules, regulations and other orders issued there under. He as an employer shall be liable to pay employer's contribution/deductions towards PF under the PF Act in respect of all labour employed by him for the execution of the contract in accordance with the provisions of the Employees' Provident Funds and Miscellaneous Provisions Act, 1952 as amended from time to time. For this purpose, he shall indicate the code number obtained from the Regional Provident Fund Commissioner or he should obtain a code number if he has not and produce the Photostat copy of the challan receipt of monthly remittance of the contribution made by him to the Commissioner. He shall also furnish such returns such returns as are due, under the Act, to be sent to the appropriate authorities through the Principal Employer". The Contractor shall also comply with the provision of **Payment of Bonus Act 1965** and shall be liable to pay the Bonus as per the Act.

46. The Contractor should get himself registered with the E.S.I Authorities as an independent Employer, obtain a separate code number and remit the dues in respect of the Labour employed by him for the work and produce the challan/Receipts of remittance of the ESI contributions due under the E.S.I Act to the Company authorities. He shall also furnish such returns, as are due, under the Act, to be sent to the appropriate authorities' through the Principal Employer. The contractor can remit their ESI & PF through a sub-agent who processes the ESI & PF code and agrees to enter an MOU with the contractor.

45. If any action is brought in by P.F. Commissioner/ESI authorities on BHEL for the work done by the Contractor for his labourers regarding PF/ESI amount due, short remittances, non-remittances etc., the Contractor shall defend the case on behalf of BHEL and / or reimburse BHEL the expenses so incurred.

46. The Contractor shall apply and obtain license under Contract labour (R&A) Act 1970 and comply the relevant provisions of this Act in respect of the labour employed by him for executing this contract. The contractor shall furnish necessary returns to the authority through the Principal Employer.

47. Contractor shall insure all his labourers and material. Any claim by his Employees for damages shall be settled by the Contractor even if action is against BHEL or to reimburse the legal expenses incurred by BHEL.

48. Any action brought in by anybody on BHEL regarding patent, right etc., used by Contractor in execution of work shall be defended by the Contractor and / or reimburse BHEL the cost of the same.

49. Contractor shall produce necessary records, documents; explanation whenever he is called upon to do by any Government Agencies.

50. Contractor should obtain “Workmen Compensation Policy” for their Employees.

51. LEAD, LIFT, DEWATERING ETC.,

a) Unless otherwise specified in the tender schedule, the rates for all items will be deemed to include all leads, lifts and descents involved in the work.

b) No separate payment will be made for dewatering (including seepage, surface drainage and monsoon water) desludging and allied operations at any stage of the work, and the cost of such operations will be deemed to be included in the contract rates.

c) No separate payment will be made for curing including pumping of curing water where ever necessary.

52. EXTRA ITEMS

No extra items of work shall be carried out by the contractor other than those authorized to do so in writing by the Engineer-in-charge. For any such items of work executed as per instructions of Engineer-in-charge, the rates will be fixed on the basis indicated under clause 50 of BHEL GCC/as per terms and conditions of BHEL. The schedule of rates to be followed in this case will be rates offered by BHEL for similar works in other contracts awarded by BHEL upon mutual agreement.

BHARAT HEAVY ELECTICALS LIMITED

(ELECTRONICS DIVISION)

MYSORE ROAD- BANGALORE-26

GENERAL CONDITIONS OF CONTRACT/TECHNICAL SPECIFIC ATION

It is hereby agreed by me/us that the BHEL General Conditions of Contract including subsequent amendments/ additions/deletions to clauses if any, and conditions pertaining the settlement of disputes by Arbitration form an integral part of the tender documents and that the tender submitted by me/ us is subject to the aforesaid BHEL General Conditions of Contract/ Technical Specification for Civil works which has been read and accepted by me/us.

ENCLOSURE: A

CLAUSE 20 OF GENERAL CONDITIONS OF CONTRACT

LABOUR

The Contractor shall employ labour in sufficient numbers either directly or through sub-contractors to maintain the required rate of progress and of quality to ensure workmanship of the degree specified in the contract and to the satisfaction of the Engineer-in-charge. The contractor shall not employ in connection with the works any person who has not completed his eighteen years of age.

The contractor shall furnish to the Engineer-in-charge at the intervals specified by him. A distribution return of the number and description by trades of the people employed on the works. The Contractor shall also submit on the 4th and 19th or every month to the Engineer-in-charge a true statement showing in respect of the second half of the preceding month and the first half of the current month (i) the accidents that occurred during the said fortnight showing the circumstances under which they happened and the extent of damage and injury caused by them and (ii) the number of female workers who have been allowed maternity benefits as provided in the maternity benefit Act, 1961 or Rules made there under and the amount paid to them.
The contractor shall pay to labour employed by him either directly or through sub-contractors wages not less than fair wages as defined in the contractors Labour Regulations.

The Contractor shall in respect of labour employed by him either directly or through sub- contractors comply with or cause to be complied by with sub-contractors, labour Regulations in regard to all matters provided therein.

The Contractors shall comply with the provisions of the payment of wages Act, 1936, Minimum Wages Act, 1948, Workmen's Compensation Act 1923, Payment of Bonus Act 1965, Industrial Disputes Act, 1947, Maternity Benefit Act 1961 or any modifications there of or any other law relating thereto and rules made there under from time to time.

The Contractors shall be liable to pay his contribution and the employees' contribution of the State Insurance Scheme in respect of all labour employed by him for the execution of the contract, in accordance with the provision of "The Employees', State Insurance Act, 1948", as amended from time to time. The Contractors shall apply to the ESI Authorities, get himself registered with them and obtain a code Number. He shall pay the remittances under his code Number only. The Contractor shall be liable to pay his contribution and the Employees' contribution towards PF as per Provident Fund Rules and Regulations in respect of all labour employed by him for the execution of the contract.

The contractor shall apply to the PF Authorities, get himself registered and obtain a code number from them. He shall pay the remittances towards PF under his code Number only. The Engineer-in-charge shall on a report having been made by an Inspecting Officer as defined in the Contractors Labour Regulations have the power to deduct from the moneys due to the Contractor any sum required or estimated to be required for making good the loss suffered by a worker or workers by reason of non-fulfillment of the conditions of the contract for the benefit of workers, non - payment of

wages or of deductions made from him or their wages which are not justified by the terms of the contract of non-observance of the said contractor's Labour Regulations.

The Contractors shall indemnify the BHEL against any payment to be made under and for observance of the regulation aforesaid without prejudice to his right to claim indemnity from these sub-contractors.

MODEL RULES FOR LABOUR WELFARE

The Contractor shall at his own expense comply with or cause to be complied with model Rules for Labour Welfare as appended to these conditions or rules framed by Government from time to time for the protection of health and for making sanitary arrangements for workers employed directly or indirectly on the works, In case the Contractors fails to make arrangements as aforesaid the Engineer-in-charge shall be entitled do so and recover the cost thereof from the contractor.

ENCLOSURE: B

SAFETY CODE

RESPONSIBILITIES OF THE CONTRACTOR IN RESPECT OF SAFETY OF MEN, EQUIPMENT, MATERIAL AND ENVIRONMENT

1. Before commencing the work, contractor shall submit a "SAFETY PLAN" to the authorized BHEL Official. The 'SAFETY PLAN' shall indicate in detail the measure that would be taken by the contractor to ensure safety of men, equipment, material and environment during execution of the work. The plan shall take care to satisfy all requirements specified hereunder. The contractor shall submit Safety Plan along with his offer. During negotiations before placing of work order and during execution of the contract BHEL shall have right to review and suggest modification in the Safety Plan. Contractor shall abide by BHEL decision in this respect.
2. The contractor shall take all necessary safety precautions and arrange for appropriate appliances as per direction of BHEL or its authorized officials to prevent loss of human lives, injuries to personnel engaged, and damage to property and environment.
3. The contractor shall provide to its work force and ensure the use of the following personal protective equipment as found necessary and as directed by the authorized BHEL Officer: -Safety Helmets conforming to IS-2925: 1984.
   (i) Safety Belts conforming to IS-3521: 1983.
   (ii) Safety Shoes conforming to IS-1989: 1978.
   (iii) Eye and Face protection devices conforming to IS-8520: 1977 and IS-8940: 1978.
   (iv) Hand and body protection devices conforming to:
   IS-2573: 1975
   IS-6994: 1973
   IS-8807: 1978
   IS-8519: 1977
4. In view of present pandemic situation, Bidders are mandatorily has to ensure all precautionary measures as per guidelines issued by State/Central government/District administration to prevent spread of COVID-19 like usage of Personal protective Equipment's and other norms like wearing masks, maintaining social distance and other instructions issued from time to time and also quote percentage including cost incurring due to prevent spread of COVID-19.

5. Successful bidder should take utmost care of their manpower deployed, considering the current outbreak due to COVID-19, Successful bidder should take precautionary measures as per guidelines issued by State/Central government/District administration to prevent spread of COVID-19.

All tools, tackles, lifting appliances, material handling equipment scaffolds, cradles, safety nets, ladders, equipment's etc. used by the contractor shall be of safe design and construction. These shall be tested and certificate of fitness obtained before putting them to use and from time to time as instructed by authorized BHEL Official who shall have the right to ban the use of any item.

All electrical equipment's, connections and wiring for constructions power, its distribution and use shall conform to the requirement of the Indian Electricity Act and Rules. Only electricians licensed by the appropriate statutory authority shall be employed by the contractor to carry out all types of electrical works. All electrical appliances including portable electric tools used by the contractor shall have safe plugging system to source of power and be appropriately earthed. The contractor shall not use any hand

lamp energized by electric power with supply voltage of more than 24 volts. For work in confined space lighting shall be arranged with power sources of not more than 24 volts.

The Contractor shall adopt all fire safety measures as laid down in the "Code for fire Safety at Construction Sites" issued by the Safety Department of the Construction Management (HQ) of BHEL and as per directions of the authorized BHEL Official. A copy of the above referred "Code of Fire Safety at the Construction Sites" shall be made available by BHEL to the contractor for reference, on demand by the contractor, during tendering stage itself.

Where it becomes necessary to provide and/or store petroleum products, explosives, chemicals and liquid or gaseous fuel or any other substance that may cause fire or explosion, the contractor shall be responsible for carrying out such provisions and/or storage in accordance with the rules and regulations laid down in the relevant government acts, such as Petroleum Act, Explosives Act, Petroleum and Carbides of Calcium Manual of the Chief Controller of Explosives, Govt. of India. etc., prior approval to the authorized BHEL Official at the site shall also be taken by the contractor in all such matters.

The contractor shall arrange at his cost (wherever not specified) appropriate illumination at all work spots for safe working when natural daylight may not be adequate for clear visibility.

The contractor shall be held responsible for any violation of statutory regulations local, state or central and BHEL instructions that may endanger safety of men, equipment, material and environment in his scope of work or another contractor or agencies. Cost of damages if any, to life and property arising out of such violation of statutory regulations and BHEL instructions shall be borne by the contractor.

In case of a fatal or disabling injury accident to any person at construction sites due to the lapses by the contractor, the victim and/or his/her dependents shall be compensated by the contractor as per statutory requirements. However, if considered necessary, BHEL shall have the right to impose appropriate financial penalty on the contractor and recover the same from payments due to the contractor for suitably compensating the victim and/or his/her dependents. Before imposing any such penalty, appropriate enquiry shall be held by BHEL giving opportunity to the contractor to present his case.

In case of any damage to property by the contractor, BHEL shall have the right to recover cost of such damages from payments from payments due to the contractor after holding an appropriate enquiry.

In case of any delay in the completion of a job due to mishaps attributable to lapses buy the contractor; BHEL shall have to recover cost of such delay from payments due to the contractor, after notifying suitably and giving him opportunity to present his case.

If the contractor fails to improve the standards of safety in its operation to the satisfaction of BHEL after being given a reasonable opportunity to do so; and/or if the contractor fails to take appropriate safety precautions or to provide necessary safety devices and equipment or to carry out instructions regarding safety issued by the authorized BHEL Official, BHEL shall have the right to take corrective steps at the risk and cost of the contractor after giving a notice of not less than seven days indicating the steps that would be taken by BHEL.

The contractor shall submit report of all accidents, fires and property damage, dangerous occurrence to the authorized BHEL Official immediately after such occurrence, but in any case not later than twelve hours of the occurrence. Such reports shall be furnished in the manner prescribed by BHEL. In addition, the contractor to the authorized BHEL Official shall also submit periodic reports on safety from time to time as prescribed.

Before commencing the work, the contractor shall appoint/nominate a responsible officer to supervise implementation of all safety measures and liaison with his counterpart of BHEL.

If safety record of the contractor in execution of the awarded job is to the satisfaction of Safety Department of BHEL, issue of an appropriate certificate to recognize the safety performance of the contractor may be considered by BHEL after completion the job.

SPECIAL CONDITIONS OF CONTRACT

1. GENERAL

The special conditions of contract and other contract documents are complimentary to each other and shall be read in conjunction with each other. In case of any conflict of meanings between the special conditions of contract and the BHEL General Conditions of Contract the provisions of the special conditions of contract shall override the corresponding provisions of the BHEL General Conditions of Contract.

2. SCOPE OF WORK

The scope of work includes for the full, final and entire completion of all works as detailed in specifications and drawings, which forms part of this Contract. The scope of work also includes cleaning/removing all debris in line with bill of quantity as directed by Engineer In-charge. The scope of work under this contract shall cover supply of all materials, labour, tools, and plants etc., unless otherwise specified in the specifications, descriptions of items or in foregoing clauses.

3. SITE CONDITIONS

a) Before tendering the Contractor shall get themselves acquainted with site conditions such as the nature of soil likely to be encountered during the course of the work etc,. The rates quoted by the contractor shall be deemed to have been quoted after getting acquainted with the prevailing site conditions. Initial jungle clearance, stripping of top soil etc., shall also be included in the quoted rates. No claims on the pretext of ignorance of site conditions shall be entertained.

b) The site of work is as mentioned in the Tender document.

4. SITE FACILITES

A. LAND

The Employer will allot land as available free of cost to the contractor for his office stores. He must maintain the areas allotted to him in a neat and clean conditions as required by the Employer. The contractor shall provide adequate storage and office facilities with approval from the Engineer. The rate quoted by the contractor shall be deemed to include for these and no separate payment will be made towards these. On completion of work, the site shall be cleaned by the contractor of all materials, temporary debris, rubbish plants and equipment's, belonging to the contractor at no extra cost. The site and surroundings shall be handed over in a neat and clean condition. In case of any failure by the contractor, the employer will get inside cleared at risk and cost of the Contractor.

B. POWER AND WATER SUPPLY

Facilities for drawing Power and water required at site for execution of the works shall be arranged by the contractor at his expense and risk. The necessary source for power & water supply has to be organized by vendor. Necessary distribution box, extension board points duly earthed, and with armoured safe power cables to be laid across the field provided point shall be in the scope of the tenderer. Further, laying of water intake and distribution pipes across the Site to various points of work from Electricity source provided water source point shall be in the scope of the tenderer. If required D.G generation sets shall be provided for Power arrangement by the contractor at his own cost. The tenderer shall make provision for temporary storage of water at suitable locations with pump if required to reach the water supply to work areas. The contractor will have to make his own arrangements for the same, without claiming any extra charge for the power and water drawl and distribution equipment.

5. MACHINERY

The Contractor shall at his own expense, supply all tools, plant and equipment (hereinafter referred to as T & P) required for execution of contract, as specified in the tender documents. whole of the works shall be executed in perfect conformity with the specifications and drawings. If contractor perform any works in a manner contrary to the specifications and drawings and without reference to the Engineer-in-charge, he shall bear all the costs arising or ensuring there from.

a) All technical documents regarding the construction of works are given in the metric system and work should be carried out according to metric system.

b) The work shall be carried out as per detailed drawings supplied by the employer. The working drawings shall be emailed progressively to the contractor free of cost. The contractor shall keep one set of drawings (duly protected from dust and wear and tear) at his own expenses always available at site for reference of Engineer-in-charge and other representatives.

c) The works shall be carried out as per detailed specifications enclosed with the tender. For items for which there is no mention in the drawings, detailed specification relevant IS specification (latest edition) shall be followed.

d) The contractor shall submit to the Employer for their approval complete drawings, of all temporary works and staging which he may require for carrying out the works shown in the drawings.

He shall at the same time if so required by the Employer submit his calculations relating to strength and anticipated deflection in respect of any aforesaid temporary works. He shall also submit for the approval of Employer drawings showing the methods he proposes to adopt for the erection of the various parts of the temporary works. Any modification to the drawings that may be required by the Employer shall be made by the contractor at his own cost. However, notwithstanding the approval of modification required for temporary works, the contractor shall be fully responsible for their efficiency, security and maintenance and for all obligations and risks in regard to such works, specified or implied in this contract and be shall reinstate the same at his own cost, should any mishap or accident occur causing damage or injury there from, subject however, to such clauses of the General conditions as may be applicable in such cases.

6. BENCH MARKS AND REFERENCE POINTS

The contractor shall construct and maintain proper benchmarks and reference points of the inter section of all main walls, no separate payment shall be made for this and rates quoted deemed to include this cost. Surveying where ever required is in contractor scope.

7. SAFETY PRECAUTIONS

The contractor shall at times observe the safety code and make necessary action as required in the tender. In default thereof, the employer may get this done departmentally or through other agencies and recover the cost from the contractor.

The Contractors shall also abide by all the security regulations promulgated from time to time by employer.

8. RATES

The rates to be quoted are intended to provide for works duly and properly completed in accordance with the general and special conditions of contract and specifications and drawings together with such alteration and/or conditions as may be required / ordered without prejudice to the generality thereof shall include for detail of construction which are obviously and fairly intended and which

may not have been specifically referred in these documents and working drawings and but are essential for execution and satisfactory completion of work including those of minor nature and shall be deemed to include and cover internal the followings.

a) Arrangements for obtaining the clearance wherever required from statutory bodies, regarding license for construction, permanent electricity, water supply, and sanitary connections including payment of necessary fees, inspection charges and obtaining financial certificates for using these services.

The various items rates quoted in the schedule as applicable shall be deemed to include the above services and no separate payments shall be made towards these.

b) The cost of all superintendence and labour materials, tools, plants, equipment's, mobilizing and demobilizing equipment fuel lubricants, fixture, transport charges, temporary and permanent works and quarrying charges, testing, screening, washing, handling of materials, stacking and removal charges, of any rejected materials and water and power arrangements and satisfactory maintenance of the same satisfactory completion of the work intended.

c) All fees, duties, royalties, rent and compensation to owner for surface damage or taxes and impositions payable to local authorities, in respect of land an structure, for all materials supplied for the work or any other duties/expenses for which the contractor may become liable or may be put to under any provision of the law for the purpose of in connection with the execution of the contract including levies payable on the transactions.

d) Settings out of works profiles etc., and of construction repair and up-keep of all centre lines, bench marks and levels and page there of including provisions of masonry/concrete pillars showing the centre line of structure/gridlines and levels and maintenance and protection of the some including providing fencing etc., throughout the period of contract.

e) Breaking, maintenance and removal of temporary works and buildings.

f) Supply of complete, Moulds, cost of testing of materials etc.

g) Working in all conditions including in/under water liquid, conditions etc., and shall also include bailing or pumping out water from the foundations, basements or any other sources of whatsoever de-sledging and allied operation at any stage of work including all suspension period and delays whatsoever. Cost of curing including pumping and cost of water whatever necessary.

h) In the interest of completion of work within the stipulated time, certain works are to be carried out during the monsoon period also. No separate payment will be made to the contractor for such works and it will be deemed to be included in the contract rates.

i) Diversion and draining works, protection works, temporary facilities, bridges, gangway.

j) Work at all depth in foundation below the ground level and in superstructure up to all height above ground level including all lifts and distances involved at any other place of work and disposed/barrow areas.

k) Unless otherwise specified in the specification schedule cost of all leads/lifts etc.

l) Provision of centering, scaffolding, strutting props etc.,

m) All materials and labour required for fencing in a protection against risk of accidents and for providing necessary/planking strutting with hand rails, gumboots, helmets, safety belts etc., during the progress of work.

n) Prevention on trespassing by providing barrier arrangements for the safety of the public or employees during the provision of works.

o) Works in all shapes include and curved all sizes as shown are as required.

p) Cleaning the site after the completion of work all debris, left out construction materials machine equipment's, temporary offices, stores, works shop etc., including dressing the area neat and clean shape.

q) Such other incidental charges or contingencies as may have been provided for in the specifications.

9. **LABOUR COLONIES**

Labour camp will not permitted within the project premises.

10. **ESCALATION**

The rates to be quoted by the tenderer shall be firm and shall cover and include all statutory levies, arising from, acts passed by parliament or by state legislature, the rates shall further be deemed to include statutory levies arising from such Acts, Central or State, which may come in to force subsequent to submission of tenders. The tenderer shall note that no claim for enhancement of rates, on the ground that existing statutory levies have been increased, or that new statutory levies have come in to effect after tender, or on any other ground, will be entertained on any account.

11. **QUANTITY**

The probable quantities of the several items of work are furnished in the schedule of quantities. It must be clearly understood that neither the probable quantities nor the value of individual items nor the aggregate value of the entire work shall be binding on the Employer/Engineer does not in any way assure the contractor or Guarantee that the said probable quantities are correct or that the work will correspond to these. The Employer/Engineer reserve the right to omit, vary or add to the item/work described in the schedule, of quantities and no claim for compensation will be entertaining on this account.

12. **VARIATION/DEVIATION IN QUANTITIES**

The contractor shall not make any alteration in addition to or omission from the work as described in the tender document except in pursuance of the written instructions of the Engineer-in-charge. No such deviation from the work described in the tender documents shall be valid unless the same has been specifically confirmed and accepted by the accepting officer in writing and incorporated in the contract. The rates quoted are firm.

13. **MATERIALS**

BHEL will not supply any materials unless otherwise specified.

14. **SUPPLY OF CEMENT, STEEL , PAINT AND OTHER CONSTRUCTION MATERIALS, IS TO BE MADE BY CONTRACTOR**

Makes / Source of supply of cement, steel, paint and other construction materials shall be as per approval of BHEL/NTPC

15. **SUPPLY BY CONTRACTOR**

The work is for a completed job including labour and supply of all materials except those otherwise specified in the bid document.

The material and works shall be subject to inspection and test as per field quality plan (FQP) duly approved by **BHEL/NTPC** .

All materials supplied by the contractor according to the contract conditions shall be subject to inspection and passing by the Engineer-in-charge or his representatives from time to time, the contractor providing all facilities for such instruction free of cost.

BHEL officers connected with the contract shall have the power at any time to inspect and examine any stores or materials intended to be used in or on the work, whether on the site or at any factory or workshop or other place where such stores or materials are being fabricated or manufactured or at any place the same are lying and the contractor shall give necessary facilities for such inspection and examination.

The Engineer-in-charge shall be entitled to have tests made of any stores or materials supplied by the contractor shall provide at his own expense all facilities which the Engineer-in-charge may require for this purpose. If at the discretion of the Engineer-in-charge an independent expert is employed to make any such tests his charges shall be borne by the contractor only if the tests disclosed that the said stores or materials are not in accordance with the provision of the contract.
Should the Engineer-in-charge/Civil Engineer consider at any time during the construction or reconstruction on prior to the expiry of the Maintenance Period that the stores or materials provided by the contractor are unsound or of quality inferior to that contracted for, or otherwise not in accordance with the contract (in respect where the decision of the Engineer-in-charge/Civil Engineer shall be final and conclusive) the contractor shall on demand, in writing from the Engineer-in-charge specifying the stores or materials complained of, not with-standing that the same may have been inadvertently passed, certified that and paid forth with remove the stores or materials so specified and provide other and suitable stores or materials at his own expense, to the entire satisfaction of the Engineer-in-charge/Civil Engineer and in the event of his failing to do so within a period to be specified by the Engineer-in-charge/Civil Engineer, in his demand aforesaid, the Engineer-in-charge/Civil Engineer may replace within the other stores or materials complained of at the risk and expense in all respect of the contractor.

The liability of the contractor under this conditions, shall not extend beyond the maintenance period aforesaid except as regards stores or materials which the Engineer-in-charge/Civil Engineer shall have previously given notice to the contractor to replace (Maintenance period for any work under this organization will be six months from the date of actual completion of the particular work and handing over to BHEL).

16. INTERRUPTION TO THE WORKS

While quoting the rates/prices the Contractor should take in to account the fact that due to the design or other stipulations at site, or the necessity to follow a particular sequence of overall construction operation, or non-supply of particular drawings, or the connected work or other reasons, interruptions are likely to be encountered in a work of this nature and magnitude. No claims for such interruptions will be entertained on any account.

17. EXTENSION OF TIME OR PENALTY/LIQUIDATED DAMAGES

Extension of time or penalty/liquidated damages as the case may be will be determined as stipulated in clause No. 2.7.9 of BHEL General Conditions of Contract 2019.

a) In addition to the above a penalty of 0.5% per week of delay on the value of work order will be levied if vendor fails to start the O& M work within one week of the date of notice.

18. COMPLETION OF WORK AND MEASUREMENT

a) All work shall be carried out according to authorized dimensions and measurement will be restricted to those authorized dimension even though the Contractor may for convenience of this work exceed the authorized dimensions.
b) All work shall be measured in accordance with the applicable standard method of measurements prescribed by the Indian Standard Institution (1200 latest edition) unless otherwise specified.
c) The Contractor shall admit for technical inspection, works which are likely to be embedded or covered by other works and have the necessary measurement books and certificates to this effect duly signed by the Engineer before the works are covered.
d) On completion of the work, the Contractor must submit to the Engineer the following documents for passing of works.
   i) A copy of the working drawing showing there on all addition and alterations in the process of execution.
   ii) A certificate for embedded and covered up works as in sub-para (C) above
e) The authorized Contractors representative and a representative of the Employer shall jointly sign a certificate of handing over any completed work and date of signature of that certificate will be that the date from which the maintenance period of that unit will reckoned.
f) Notwithstanding the above, insurance cover has to be taken by the contractor for the full value of work as also for the duration of the contract period. 50% of the Security Deposit shall be released only on the total completion of the building and handing over to BHEL to their satisfaction. Remaining 50% of Security Deposit shall be released subject to the stipulation in BHEL's GCC after 6 months from the date of completion of the building.

19. MAINTENANCE OF WORK

The contractor will be responsible for the maintenance of works during the period of construction until the various items are taken over, and for a further period of six months, from the date of taking over.

If the contractor fails to maintain the building satisfactorily, it will be got done by other agency and cost towards such maintenance together with departmental charges will be recovered from his bills/dues.

20. SECURITY DEPOSIT

Upon acceptance of the tender, the successful tenderer shall remit the security deposit with Bharat Heavy Electricals Ltd within the time as specified in the Letter of Intent.
The rate of Security Deposit will be 5% of work order value.

The contractor should submit the Security Deposit before the start of the work by

i) Cash (as permissible under the income Tax Act).

ii) Pay order, demand draft in favour of BHEL.

iii) Local cheques of scheduled banks, subject to realization.

iv) Securities available from Post Offices such as National Saving Certificates, Kisan Vikas Patras etc.,(Certificate should be held in the name of contractor furnishing the security and duly pledged in favour of BHEL and discharged on the back).

47. Bank Guarantee from scheduled Banks/Public financial Institutions as defined in the companies Act subject to a maximum of 50% of the total security deposit value. The balance 50% will be recovered from running bills. The Bank Guarantee format should have the approval of BHEL. Bank guarantee shall be necessarily issued by any Nationalised or Scheduled Banks. BGs from Co-operative banks are not acceptable in any circumstances.

v)

vi) Fixed Deposit Receipt issued by scheduled Banks/Public Financial Institutions as defined in the Companies Act. The FDR should be in the name of the contractor, A/C BHEL, duly discharged on the back.

vii) Security Deposit can also be recovered at the rate of 10% from the running bills. However, in such cases at least 50% of the Security Deposit should be collected before start of the work and balance 50% may be recovered from the running bills.

viii) EMD of the successful tenderer shall be converted and adjusted against the Security Deposit.
The EMD/Security Deposit shall not carry any interest.

NOTE: Accepting of Security Deposit against Sl. No. (iv) and (vi) above will be subject to hypothecation or endorsement on the documents in favour on BHEL. However, BHEL will not be liable or responsible in any manner for the collection of interest or renewal of the documents or in any other matter connected therewith.
For extra items of work and deviated quantities, security deposit will be recovered at 10% of the value of deviated amount. The security deposit will be released as stipulated under relevant clause of GCC 2019.

21. RUNNING ACCOUNT PAYMENTS

During execution of work, monthly payments of all works in place will be made on the basis of measurements recorded in measurement sheet/book/register format in respect of items executed but no claim on the account will be entertained, if for any reason payments are not so made. PRICE VARIATION clause not applicable.

22.1 MOBILIZATION ADVANCE/ADVANCE PAYMENT - NOT APPLICABLE

22.2 INTEREST & RECOVERY - NOT APPLICABLE

23. Statutory Deduction towards Income Tax will be made as per rules.

24. In respect of all labour directly or indirectly employed on the work by the Contractor, the Contractor shall comply with the provisions of the contract labour (Regulation and Abolition) Act 1970

or any amendment thereof and all legislations and rules of the State and or Central Government or other Authority, framed from time to time governing the protection of health, sanitary arrangements, wages, welfare and safety for labour employed on building and construction works. The rules and other statutory obligations with regard to fair wages, welfare and safety measures, maintenance of the register etc., will be deemed to be part of the contract.

25. The Contractor is required to take insurance for all workers employed on works towards payment for workmen compensation. The insurance has to be taken out within 15 days of the award of work and has to be produced at the time of signing agreement. Half (1/2%) shall be deducted for every bill if the contractor fails to produce a proof of having taken such an insurance to cover his workmen. However, the contractor shall be fully responsible for all the consequences arising out of such default. This may also be read with relevant clauses of BHEL GCC 2019.

25. <u>TIME OF COMPLETION</u>

The date of commencement of work shall be counted from the date of handing over the site to the contractor. It may be clearly understood that time is the essence of the contract and the entire work should be completed within the time imposed in the tender document letter of intent.

26. The Contractor has to pay the Works Contract Tax (Under relevant section of the State Government Act) of their own on Monthly basis.

27. The management of BHEL shall be at liberty to terminate the contract by issuing a month's notice to the contractor without assigning any reason what so ever. As regards unsatisfactory performance or noncompliance with any of the terms & conditions of the contract by the contractor. The management of BHEL shall have the right to terminate the contractor forthwith without notice & rearrange the balance work through other agencies at the risk & cost of the contractor & under such circumstances, the Earnest Money Deposit/Security Deposit paid by the contractor shall stand forfeited.

28. <u>SPECIAL CONDITIONS OF TENDER</u>

i) Tenderers should not disclose any price bid details/discounts in the technical bids.

29. <u>WORKMEN COMPENSATION POLICY</u>

The contractor is required to take Insurance for all the workers employed on the works towards payments for workmen compensation. The Insurance has to be taken out within 15 days of the award of work and has to be provided at the time of signing the agreement. Half percent (0.5%) of the amount shall be deducted from every bill if the contractor fails to produce a proof of having taken such an insurance to cover his workmen. However, the contractor shall be fully responsible for the consequences arising out of such default.

FORM OF TENDER

Having examined the invitation to bid, Instructions to Bidder, General conditions of contract, Special conditions, Specifications tender schedule, Contract drawings and other documents for the above work, we the undersigned, offer to construct, erect complete and maintain the whole of the said in conformity with the said bid documents on the terms and conditions and under the provisions set out or called for in the contract documents at the rates listed in the schedule of unit prices or elsewhere in the contract documents.

We undertake if our bid is accepted, to commence the works within 7 days from the date of issue of award and to complete and delivery the whole of the works comprised in the contract as per the time schedule agreed to the contract document.

We agree to abide by this bid for the period of three months from the date fixed for receiving the same and it shall remain binding upon us and may be accepted at any time before expiry of the period.

Until and unless a formal agreement is prepared and executed this bid, together with your award thereof shall constitute a binding contract between us.

ENCLOSURE: C

CLAUSE 58 OF GENERAL CONDITIONS OF CONTRACT

ARBITRATION:

Except where otherwise provided for in the contract all questions and disputes relating to the meaning of the specifications, designs, drawings and instructions herein before mentioned and as to the quality of workmanship or materials used on the work or has been other as to any other questions, claim, right, matter or thing whatsoever in any way arising out of or relating to the contract, designs, drawings, specifications, estimates, instructions, orders or these conditions or otherwise concerning the works, of or the execution or failure to execute the same whether arising during the program progress of the work or after the completion or abandonment thereof shall be referred to the sole arbitration of the Executive Director/General Manager of BHEL and if the Managing Executive Director/General Manager Chief Engineer is unable or unwilling to act, to a as the sole arbitration of some other person appointed by the Executive Director / General Manager, willing to act as such Arbitrator. There will be no objection if the arbitrator so appointed is an employee of BHEL EDN or an employee of any other unit of BHEL and that he had to deal with the matters to which the contract relates and that in the course of its his duties as such he had expressed views on all or any of the matters in dispute or difference. The Arbitrator to whom the to matter is originally referred being transferred or by vacating his office or being unable to act for any reason, such Executive Director / General Manager as aforesaid at the time of such transfer, vacation of office or inability to act, shall appoint account another person to act as arbitrator in accordance with the terms of the contract, such person shall be entitled to proceed with the reference from the stage at which it was left by his predecessor. It is also a term of this contract that no person other than a person appointed by such Executive Director/General Manager or an employee appointed as arbitrator as aforesaid should act as arbitrator and the arbitrator shall give reasons for the award.

Subject as aforesaid the provision of the Arbitration Act, 1940 or any statutory modification or re-enactment thereof and the rules made there under and for the time being in force shall apply to the arbitration proceeding under this clause.

It is a term of a contract that the party involving invoking arbitration shall specify the dispute or disputes to be referred to arbitration under this clause together with the amount or amounts claimed in respect of each such dispute.

The arbitrator(s) may from time to time with consent of the parties enlarge extend the time, for making the publishing the awards.

The work under the contract shall, if reasonably possible, continue during the arbitration proceeding and no payment due to or payable to the contractor shall be withheld on account of such proceedings.

The arbitrator shall be deemed to have entered on the reference on the date he issued notice to both the parties fixing the date of the hearing.

The arbitrator shall give a separate speaking award in respect of each dispute or difference referred to him.

The venue of arbitration shall be such place as may be fixed by the arbitrator in his sole discretion.

The award of the arbitrator shall be final, conclusive and binding on all parties to this contract.

Annexure - I

Certificate by Chartered Accountant on letter head

This is to Certify that M/S ....., (hereinafter referred to as 'company') having its registered office at ..... is registered under MSMED Act 2006, (Entrepreneur Memorandum No (Part–II) ..... dtd:....., Category: ..... (Micro/Small)). (Copy enclosed).

Further verified from the Books of Accounts that the investment of the company as per the latest audited financial year ..... as per MSMED Act 2006 is as follows:

1. **For Manufacturing Enterprises:** Investment in plant and machinery (i.e. original cost excluding land and building and the items specified by the Ministry of Small Scale Industries vide its notification No.S.O.1722(E) dated October 5, 2006 :
   Rs.....Lacs
2. **For Service Enterprises:** Investment in equipment (original cost excluding land and building and furniture, fittings and other items not directly related to the service rendered or as may be notified under the MSMED Act, 2006:
   Rs.....Lacs

(Strike off whichever is not applicable)

The above investment of Rs.....Lacs is within permissible limit of Rs.....Lacs for .....Micro / Small **(Strike off which is not applicable)** Category under MSMED Act 2006.

Or

The company has been graduated from its original category (Micro/ Small) **(Strike off which is not applicable)** and the date of graduation of such enterprise from its original category is ..... (dd/mm/yyyy) which is within the period of 3 years from the date of graduation of such enterprise from its original category as notified vide S.O. No. 3322(E) dated 01.11.2013 published in the gazette notification dated 04.11.2013 by Ministry of MSME.

Date:

(Signature)

Name -

Membership number -

Seal of Chartered Accountant

ANNEXURE II

Electronic Funds Transfer (EFT) OR
Paylink Direct Credit Form

Please Fill up the form in **CAPITAL LETTERS** only.
TYPE OF REQUEST(Tick one): _____ CREATE _____ CHANGE

BHEL Vendor / Supplier Code:
Company Name :
Permanent Account Number(PAN):
Address

City: _____ PINCODE _____ STATE _____

Contact Person(s)
Telephone No:
Fax No:
e-mail id:

1 Bank Name:
2 Bank Address:

3 Bank Telephone No:
4 Bank Account No:
5 Account Type: Savings/Cash Credit
6 9 Digit Code Number of Bank and branch appearing on MICR cheque issued by Bank
7 Bank swift Code(applicable for EFT only)
8 Bank IFSC code(applicable for RTGS)
9 Bank IFSC code(applicable for NEFT)

A I hereby certify that the particulars given above are true, correct and complete and that I, as a representative for the above named Company, hereby authorise BHEL, EDN, Bangalore to electronically deposit payments to the designated bank account.

B If the transaction is delayed or not effected at all for reasons of incomplete or incorrect information, I would not hold BHEL / transfering Bank responsible.

C This authority remains in full force until BHEL, EDN,Bangalore receives written notification requesting a change or cancellation.

D I have read the contents of the covering letter and agree to discharge the resposibility expected of me as a participant under ECS / EFT.

Date:

Authorised Signatory:
Designation: Telephone NO. with STD Code

Company Seal

Bank Certificate

We certify that_____has an Account No_____ with us and we confirm that the bank details given above are correct as per our records.

Date: (.....)
Place: Signature

Please return completed form along with a blank cancelled cheque or photocopy thereof to:
Bharath Heavy Electricals Ltd,
Attn:
Electronics Division, Mysore Road,
BANGALORE - 560 026
In case of any Querry, please call : 080-26998xxx / 2674xxxx or fax no. 080-2674xxxx

ANNEXURE-III

UNDERTAKING BY THE TENDERER(S)

We _____ (Name of the Tenderer) hereby declare that we have fully read and thoroughly understood the tender requirements and accept all terms and conditions of the tender. Our offer is in confirmation to all the terms and conditions of the tender.

We also confirm that if once work is awarded to us, we are responsible for making the due payment of wage/salary to all our Labourers/staff along with all statutory payments in timely manner. In case of any default from our side in making payment as mentioned above, BHEL may make the salary/wage/lump sum payment directly to our labourers/staff deployed by us and is authorized to recover the expenditure so incurred with processing charges from our Security Deposit/Bank Guarantee/ Running Bills. We further confirm that, we will be responsible for all statutory obligations (like Minimum wages, PF, ESI and Bonus etc.) towards our deployed manpower.

We also hereby agree that, at the end of every wage month, we will submit the wage details due to the manpower deployed by us to BHEL before 10th of next month.

Date: Bidder sign with seal

Note: This undertaking on letter head is mandatory for technical qualification of the bid.

Additional Clauses for GST:

1. BHEL GST Number of Nodal Agency:

   Nodal Unit Registered as Supplier of Goods/Services in GST:
   GSTIN of Nodal Unit: Will be intimated later after award of work.

2. HSN (Harmonized System of Nomenclature) / SAC (Services Accounting Code) to be mandatorily mentioned in all quotations & invoices submitted.

3. Invoice submitted should be in the format as specified under GST Laws viz. all details as mentioned in Invoice Rules like GSTN registration number, invoice number, quantity, rate, value, taxes with nomenclature – CGST, SGST, IGST mentioned separately, HSN Code / SAC Code etc.

4. Payment of GST to vendors as applicable will be made only if it is matching with data uploaded by Vendors

5. Vendors to give undertaking that GST as mentioned in the Invoice has been paid/will be paid either through cash or admissible input credit and also file the returns

6. For invoices paid on Reverse charge basis – that it is “payable on reverse charge basis” to be mentioned on the invoice.

7. With respect to supplies, vendor should intimate BHEL immediately on dispatch for parallel billing on customer

8. Vendor should get GST registration, if not available, in the state of Andhra Pradesh immediately after placement of order.

Unprice-Bid *(Annexure-I)*

SCHEDULE OF WORKS FOR OPERATION AND MAINTENANCE OF NTPC KADIRI 50MWp SOLAR PV PLANT FOR 11 Months

Sl No	Activity description	Scope of Work & Remarks	Unit	Qty	Total Cost (% weightage of Total Value)
1	O&M Contractor has to take charge of Site in As-is-Where-is condition and to repair/replace the faulty euipment as mentioned on ONE TIME Basis. Further O&M of these equipment will be under regular O&M Scope. Bidder is advised to visit the site to ascertain the extent of repairs / replacement and scope of this work.	1. Fire Alarm System is not working. Needs repair/replacement. 2. Printer machine in SCADA room is not working. Needs repair. 3. CMCS water tank replacement and 1 booster pump repair.	Set (One time initial)	1	4.84%
2	Deployment of O&M Staff-O&M Incharge (1NO)	"Minimum One technical-cum-administrative in-charge having graduation in electrical / electronics engineering and experience in electrical plants with overall responsibility for complete plant operations. The in-charge shall have competence to handle technical and operational / crisis problems. " Major responsibilities of O&M incharge : (i) Allotment of work to all the O&M staff and supervision of O&M works as per schedule approved by BHEL. (ii) Sending Daily, weekly and Monthly reports (i.e. Daily values of solar array strings, weather parameters, Daily energy generation, Events (with date, time) of faults / tripping / breakdown of equipment, Events (with date, time) of grid outage, Events (with date, time) of equipment damages, Activities of module cleaning etc) (iii) Interaction with customer NTPC / HESCOM etc. (iv) Coordinating with sub-station upon grid failures /cable faults and implementing the needful steps to restore the plant to normal operation. Requesting for Line clearances and closing the same after fault is rectified. (v) Monthly downloading of data from ABT meter using HESCOM / as instructed by NTPC. Energy generation / meter reading report to be prepared and submitted to the concerned department. Signatures from NTPC representatives shall be obtained wherever required. (vi) Maintaining plant records and log books, stock register and reporting to BHEL. (vii) Trouble-shooting and Updation of SCADA system if required as instructed by BHEL. (viii) Theft incidents: immediate reporting to BHEL, filing FIRs at police stations on BHEL behalf, coordination for site inspection by insurance companies and clearance of insurance claims, logging of events (date, time) and maintaining records. (ix) Accidents: immediate reporting to BHEL, coordinating with hospitals, logging of events (data, time) and maintaining records. Maintaining O&M Log book and recording daily evenys and works. Payment for Services of O&M in Charge shall be as per attendance records maintained and deductions will be passed in case of non-availability.	Monthly	11	4.22%

SCHEDULE OF WORKS FOR OPERATION AND MAINTENANCE OF NTPC KADIRI 50MWp SOLAR PV PLANT FOR 11 Months

Sl No	Activity description	Scope of Work & Remarks	Unit	Qty	Total Cost (% weightage of Total Value)
3	Deployment of O&M Staff: Engineers having graduation/Diploma in electrical /electronics engineering (2 nos.) and O&M Technicians (6 nos.)	"Minimum Six working level O&M Technicians staff (Two in morning 6am shift and 4 in General shift 10am) with ITI / diploma level qualifications in engineering with competence for operating electrical / electronics / mechanical equipment, taking measurements, data logging / maintaining registers, preparation of reports in computer." Note: At least one among the technical personnel shall essentially be a certified / licensed person for HT operations (33KV minimum). This is a mandatory requirement. Technicians(Skilled and Highly skilled) shall perform Plant Operation works such as (i) Logging of DC, AC, grid parameters (current, voltage, power, energy) at PCUs, HT panels, 33KV switchyard, transformer temperatures, equipment tripping/ breakdown, grid outage as per BHEL formats. (ii) SCADA data station / HMI PC operations, trend graphs and urgent reporting to BHEL in case of any problems / anomalies observed with any of the parameters, resolving communication issues between SCADA and other equipment, healthiness of all equipment " Carrying out Preventive and Breakdown maintenance shall be carried out as per O&M schedule / OEM guidelines / maintenance manual such as a) Cleaning, tightness checks, lubrication and other maintenance of equipment -PCUs, HT panels, 33KV Power transformers, Inverter transformers, C&R panels, Auxiliary transformers, ACDB, FCBC, UPS, Battery banks, 33 KV Switchyard equipment, SMBs, SCADA, WMS, CCTV, Fire Alarm, ESE Lightning arresters, earthing, light fitting -indoor and outdoor etc. b) Replacement of Silica gel, gaskets, Rectification of Oil leakages in all transformers and 33KV Switchyard equipment. c) Repair/ replacement of failed 33KV cable inside plant, replacement of failed 33 kV termination/ jointing kits. d) Trouble-shooting of solar array problems as DC earth fault, OFC/ communication cable faults, replacement of damaged PV modules, SMB components etc. e) Checking tightness of MMS and PV Modules (f) Monthly earth resistance measurement and recording value on the Earth chambers and in O&M Log book. (g) Watering of earth pits (h) Inspection of fire extinguishers (weight, pressure indication, physical status etc.) followed by refilling actions, if necessary, based on indications. Report to be submitted as per BHEL approved recording formats. Measurement of Services of Technicians shall be as per attendance records maintained and deductions will be passed in case of non-availability at site.	Monthly	11	30.03%
4	Deployment of O&M Staff-O&M UNSKILLED (13 nos.)	Minimum Six unskilled persons for regular house-keeping (cleaning / mopping etc) and water cleaning of SPV modules (all working in General Shift from 10am) A) Water cleaning of solar modules of approximately 166240 nos. **(TWO cycles per month, each cycle shall consist of cleaning of entire 166240 Nos modules)**. B)Grass cutting - maintenance of plant without grass (One cycle per quarterly). Minimum 4 grass cutting machines to be used for grass cutting. Grass cutting machines and its Petrol cost is under vendor scope. C) General maintenance works such as Daily housekeeping activity for Inverter rooms and Control room including toilets, Garbage removal from solar array field, switchyard, roads, drains, pathways, sand buckets, repair of plumbing works, underground water tanks, Sintex tanks, cleaning of sewerage lines, septic tanks, soak pits if required, minor civil repair works such as leakages, doors, windows, rolling shutters, ventilators, floor/ tiles/ wall cracks, cleanning of drains etc. Each of the Unskilled workers shall be eligible for one day off in a week. A reliever shall also be deploted to take care of this requirement such that Minimum numbers of unskilled labour is maintained every day. O&M Contractor shall disburse payment to these labour in line with Minimum wages Act of Andhra Pradesh state and mainatin and submit records. D) Drinking water to be arranged for O&M personnel at site. Measurement of Services of Unskilled labour shall be as per attendance records maintained and deductions will be passed in O&M Contractor Bills in case of non-availability at site.	Monthly	11	33.14%

SCHEDULE OF WORKS FOR OPERATION AND MAINTENANCE OF NTPC KADIRI 50MWp SOLAR PV PLANT FOR 11 Months

Sl No	Activity description	Scope of Work & Remarks	Unit	Qty	Total Cost (% weightage of Total Value)
5	Checking and re-filling of Fire extinguishers and sand buckets as required.	All the fire extinguishers to be checked for healthiness and re-filling to be carried out as and when required. Inspection of fire extinguishers (weight, pressure indication, physical status etc) followed by refilling actions, if necessary, based on indications. Report to be submitted as per BHEL approved recording formats.	Monthly	11	5.71%
6	Seasonal tilting of SPV modules	Seasonal tilting of SPV modules as per seasonal tilting chart. All PV Modules installed shall be checked for tightness of bolts, For damages / hot spots on any module. Checking tightness of power cable terminations in SPV modules (MC4), SMBs, electrical panels of control room and switchyard.	Half Yearly	2	12.90%
7	Annual maintenance activities	Annual maintenance of all transformers with respect to BDV measurement, Oil filtering as required, tightness of cables, earthing and hardwares, replacement of gasket, silica gel breather, paint touchup, arresting oil leakages and oil topup of all transformers (33KV and aux transformers), CT, PT, lubrication of moving contacts (VCBs) and other related electrical works. Through OEM / competent testing agencies as approved by BHEL. All required tools, tackles, testing and measuring instruments, Oil filtration kit, DG set etc. to be arranged by vendor. The Annual Maintenance activities shall be carried out between November to January and will be measured only when all activities listed above are completed. Payment for any Maintenance not carried out shall be deducted from O&M Contractor Bills.	Yearly	1	5.19%
8	Calibration of Weather Monitoring Station equipment	Weather monitoring station equipment to be calibrated at IMD or OEM recommended labs as per calibration period of individual equipment as recommended by OEM.	Yearly	1	0.78%
9	Painting of all metal structures (non-galvanized), main gate, rolling shutters, switchyard and transformer yards fencing and gates, earthing chambers and all rusted components etc.	Painting of all metal structures shall be carried out once in every year.	Yearly	1	0.78%
10	Internet Charges	Internet lease line of 2 MBPS for remote connectivity of SCADA to be arranged at site round the clock (Including payment of unpaid dues)	Yearly	1	1.37%
11	Maintenance of Roads and drains	Maintenance of Roads and drains such as: I. Crack repairing of the road surface. II. Pot-holes over the top road surface to be rectify. III. Maintenance of shoulders for the rain cuts or damage due to some external reasons. IV. Before and after the monsoon season the storm water drainage shall be maintained & cleaned for smoother flow of storm water.	Yearly	1	1.04%
Total amount excluding GST (Rs.)					**6,441,527**

Total amount: Rupees Sixty-Four Lakhs Forty-One Thousand Five Hundred and Twenty-Seven, Plus applicable GST

IMPORTANT NOTE:
Monthly/Annual O&M payment to the contractor will be released on comparision of generation as per guaranteed paramenter vis-a-vis Actual generation. The shortfall (if any) w.r.t guaranteed generation shall be duly supported by documentary evidence. Incase of shortfall w.r.t guaranteed generation paramenter, BHEL Engineering department to certifiy that "the reasons submitted by contractor are beyond its reasonable control". The amount equivalent to shortfall in generation may be observed by BHEL on exceptional basis.

*Manpower indicated is only minimum requirement. However, vendor to deploy required manpower to complete each activity in specified time duration.

The value of the Contract will remain same throughout contract period and no escalation is allowed. Hence bidder has to quote the price, considering the revision of minimum wages by Government notifications from time to time.

Technical Specification
of Operation & Maintenance work
at NTPC 50MWp SPV power plant, KADIRI, AP

OPERATION AND MAINTENANCE:

1.0	Commencement of operations and maintenance: O&M shall be likely from November, 2020	
1.1	Period for O&M: Vendor shall operate and maintain the power plant for a period of 11 months (approx.) from November, 2020.	
1.2	O&M personnel 1. Vendor shall deploy following minimum personnel: **(a) Technical / administrative / office personnel** (i) One technical-cum-administrative in-charge having graduation in electrical / electronics engineering and experience with overall responsibility for complete plant operations. The in-charge shall have competence to deftly handle technical and operational / crisis problems. (ii) Two Engineers having graduation/Diploma in electrical /electronics engineering. (iii) Six working level staff with ITI / diploma level qualifications in engineering with competence for operating electrical / electronic / mechanical equipment, taking measurements, data logging / maintaining registers, preparation of reports in computer. (iv) Thirteen unskilled persons for regular house-keeping (cleaning / mopping etc) and water cleaning of SPV modules. (v) **Note:** At least one among the technical personnel shall essentially be a certified / licensed person for HT operations (33kV minimum). This is a mandatory requirement. **(b) Security personnel** Deployment of security guards during O&M period shall be in scope of BHEL. 2. Vendor shall provide uniforms for the O&M staff. 3. Similarly, O&M personnel shall be provided with raincoats, toolsets, earthing rods, safety gloves, safety goggles, gumboots, helmets and all other personal protective equipment (PPE) that will be relevant to ensure human safety. 4. Names, qualification, work responsibility of personnel shall be listed on a display board within control room. 5. Attendance register shall be maintained for both the teams. 6. Vendor shall ensure statutory requirements such as ESI, PF and labour license for their O&M personnel posted at site. 7. BHEL / NTPC shall have right to disallow any O&M employee, if found unfit to perform. BHEL instructions issued in writing shall be binding on vendor who shall replace the person. 8. O&M personnel at site shall conform to general regulations in force at site and to any special instructions from local NTPC administration. 9. O&M personnel at site shall be deemed to be aware of damages and risks incidental to conditions of NTPC land & works from time to time and BHEL / NTPC shall not be responsible for any injury to personnel arising there from. 10. Training to O&M personnel It is the absolute responsibility of vendor to ensure imparting of necessary training to their O&M personnel to get them acquainted with the	

	operations of various electrical and mechanical equipment of the power plant. For this purpose, vendor shall identify the O&M personnel well in advance and involve them during installation and commissioning stages so that they become well versed with various functional aspects of the power plant. 11. Availability of O&M personnel at power plant (a) Vendor shall ensure that operating staff are present in the power plant during 7:30 AM– 6:30 PM every day. (b) Vendor shall ensure that certain minimum operating staffs are present at the power plant even on festivals, public holidays and any other unique occasions so that the plant is run under competent supervision on all days. 12. O&M personnel shall, strictly, not use any part of the power plant for their personal / residential purposes. Their presence at the plant shall, strictly, be meant only for the purpose of operation and maintenance of plant.	
1.3	**O&M operations – daily basis** (1) Water cleaning of SPV modules (2) Inverter room / CMCS room cleaning – dry sweeping, wet mopping (3) Water wash cleaning of toilets, urinals (4) Gardening of landscaping areas: watering of plants, trimming of plants as applicable and necessary. (5) Logging of DC, AC, grid parameters (current, voltage, power, energy) at PCUs &VCB panels, transformer temperatures, equipment tripping/ breakdown, grid outage etc as per BHEL formats. (6) SCADA data station / PC operations for daily monitoring of weather parameters, trend graphs and urgent reporting to BHEL/NTPC in case of any problems / anomalies observed with any of the parameters. (7) Drinking water to be arranged for O&M personnel at site. (8) Grass cutting, removal of debris and dumping the same at designated place.	
1.4	**O&M activities – weekly basis** (1) Removal of garbage from solar array field, switchyard, roads, drains, pathways, sand buckets; logging in registers with signatures of operating persons and in-charge. (2) Monitoring and logging of fire extinguisher levels / pressures as per BHEL formats	
1.5	**O&M activities – monthly basis** (1) Inspection of fire extinguishers (weight, pressure indication, physical status etc) followed by refilling actions, if necessary, based on indications. Report to be submitted as per BHEL approved recording formats. (2) Earthing resistance measurements for solar array structures, control room equipment, switchyard equipment, lightning arrestors: measured values shall be recorded in registers and reported to BHEL as per BHEL approved recording formats. (3) Submission of values / status of plant parameters and events for the corresponding month, as below, as per BHEL approved formats: a. Daily values of solar array strings (SMB parameters) b. Daily values of weather parameters (solar energy, wind speed, ambient temperature) c. Daily energy generation d. Events (with date, time) of faults / tripping / breakdown of equipment	

	e. Events (with date, time) of grid outage f. Events (with date, time) of equipment damages, accidents and thefts g. Activities of module cleaning (4) Monthly reports shall be submitted to BHEL for all the above data. (5) Energy generation / meter reading report to be prepared and submitted to the concerned department. Signatures from NTPC representatives shall be obtained wherever required.	
1.6	**O&M activities - quarterly basis** (1) Cleaning of PCUs, LT panels, VCB panels, UPS panels etc to remove accumulated dust. (2) Monitoring and status review, followed by rectification / calibration / replenishment / replacement actions as necessary and applicable for following: (a) Spare items of all electrical equipment (b) First aid box items - medicines and accessories (c) Safety gadgets (d) Tool kits and measuring instruments (e) Yard lights (f) Pumps, starters (g) Control room appliances: air conditioners, lights, fans, exhaust fans, switch boards etc (3) Pest control for control room (rats, snakes etc) – sprays, chemicals, medicines etc to be applied wherever required. (4) Submission of quarterly report on above activities to BHEL.	
1.7	**O&M activities – half yearly basis** (1) Cleaning of water storage tanks.	
1.8	**O&M activities – yearly basis** (1) BDV measurements for oil samples from all the transformers and submission of report to BHEL / NTPC. (2) Filtration of oil to be arranged, if required, based on BDV measurement report. (3) Lubrication of moving contacts (VCBs etc) with appropriate grease etc (4) Cleaning of sewerage lines, septic tanks (if found necessary) (5) Painting of main gate, switchyard gate / fencing, earthing chambers, other steel structures within control room and switchyard if required based on conditions of rusting etc (6) Checking tightness of hardware in solar array structures and tightening wherever required. (7) Checking tightness of power cable terminations in SPV modules (MC4), SMBs, electrical panels of control room and switchyard. (8) Maintenance of Roads and drains.	
1.9	**O&M activities - as and when required (contextual basis)** (1) Monitoring and operation of plant electrical equipment as and when required: (a) VCB on/off: local operations from outdoor VCB panel and remote operations from SCADA system. (b) Settings of numerical relays in VCB panels: review and revision in consultation with BHEL. (c) ACB and MCCB on/off operations on LT side	

	(d) PCU operations: emergency close, LCD displays (selection of settings, monitoring the DC/AC/event/fault status parameters), operation of duct fans (e) UPS panels and Battery bank operations (f) Bore well pump operations to fill the water storage tanks (2) Seasonal tilting of SPV modules from one angle to the other (5, 15 and 30 degrees) based on seasonal tilting chart that will be finalized by BHEL/NTPC during detailed engineering phase. This is a critical activity as energy generation is strongly affected by the angle. Vendor shall deploy the necessary tools/tackles, machinery, number of skilled/unskilled labour etc for this purpose. (3) Coordinating, on behalf of BHEL, and obtaining renewal of statutory licenses, clearances and approvals from state departments such as electricity boards, CEA/CEIG etc (4) Repair and replacement of vendor supplied items, by vendor, with urgent action plans and implementation, when the items are found non-working / damaged. The same shall be reported to BHEL within 12 hours from time of observation. (5) Reporting, on an immediate basis (within max 2 hours) of functional problems / damages in BHEL supplied items to facilitate repair / replacement by BHEL. Further, vendor shall correspond / coordinate with respective equipment vendors / service centres, on behalf of BHEL, for getting the service engineers to the site. Later, coordinating with the service engineers during their visit to site, and assisting them in the trouble shooting process until the problem is resolved. Vendor shall report to BHEL (within max 2 hours) immediately after the problem is resolved. (6) Vendor shall keep updating the spares inventory at the site every time there is consumption of spare items towards replacement. In case of shortage of spares, the same shall be reported on an urgent basis (with max 2 hours) to BHEL. (7) Coordinating with sub-station upon grid failures, line problems etc and implementing the needful steps to restore the plant to normal operation. (8) Theft incidents: immediate reporting to BHEL, filing FIRs with police stations on behalf of BHEL, coordination for site inspection by insurance companies and clearance of insurance claims, logging of events (date, time) and maintaining records. (9) Accidents: immediate reporting to BHEL, coordinating with hospitals, logging of events (data, time) and maintaining records.	

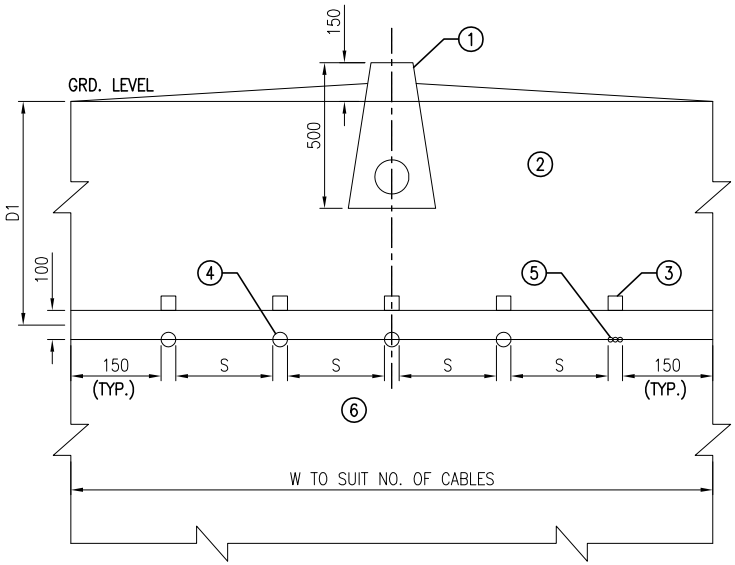

DIRECYLY BURIED CABLES
IN SINGLE LAYER

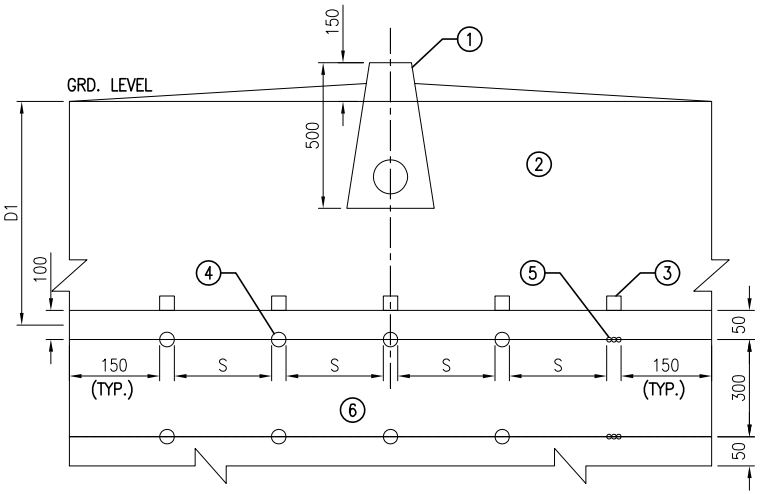

DIRECYLY BURIED CABLES
IN TWO LAYER

LEGEND:

1. CABLE ROUTE MARKER
2. EARTH BACK FILLED & RAMMED
3. PROTECTIVE COVERS
   a) BRICKS FOR LOW VOLTAGE CABLES
   b) RCC FOR HIGH VOLTAGE CABLES WITH HOLE AT EACH END TO TIE THE TO EACH OTHER WITH G.S. WIRE.
4. ARMOURED POWER CABLE
5. ARMOURED CONTROL CABLE
6. FINE SAND / RIDDLED SOIL COMPACTED

DIMENSION MIN.	1100V GRADE CABLES	FOR 3.3kV TO 11kV	22kV & 33kV
D1	750	900	1050
S	d BETWEEN CABLES OF SAME CLASS X 300mm BETWEEN CABLES OF DIFFERENT CLASS X 400mm BETWEEN SINGLE CORE POWER CABLE AND COMMUNICATION CABLE X 300mm BETWEEN MULTICORE POWER CABLE AND COMMUNICATION CABLE		

d – OVERALL DIAMETER OF THE BIGGER OF THE TWO CABLES.

X – SPACING SHALL BE TAKEN BOTH HORIZONTALLY AND VERTICALLY.

NOTES:

1. ALL DIMENSIONS ARE IN MM.
2. SINGLE CORE CABLES SHALL BE RUN IN TREFOIL FORMATION AND SHALL BE ROUND BY SELFLOCKING CABLE TIES AT EVERY 750mm.
3. CABLE IDENTIFICATION TAG SHALL BE TIED AT BOTH ENDS OF THE CABLES AND ALSO AT AN INTERVAL OF 10 METRES.
4. IF THE MINIMUN CLEARENCE AS INDICATED THE ABOVE TABLE FOR CABLES OF DIFFERENT. CLASSES ARE NOT FEASIBLE, BRICK BARRIERS SHALL BE USED BETWEEN ADJACENT CABLES.
5. G.I PIPE SHALL BE PROVIDED FOR ROAD CROSSING AT A MINIMUM DEPTH OF 600mm FROM THE GRADE LEVEL UNLESS OTHERWISE SPECIFIED.
6. ROUTE MARKERS SHALL BE PROVIDED AT AN INTERVAL OF 30M & AT EVERY CHANGE IN DIRECTION.

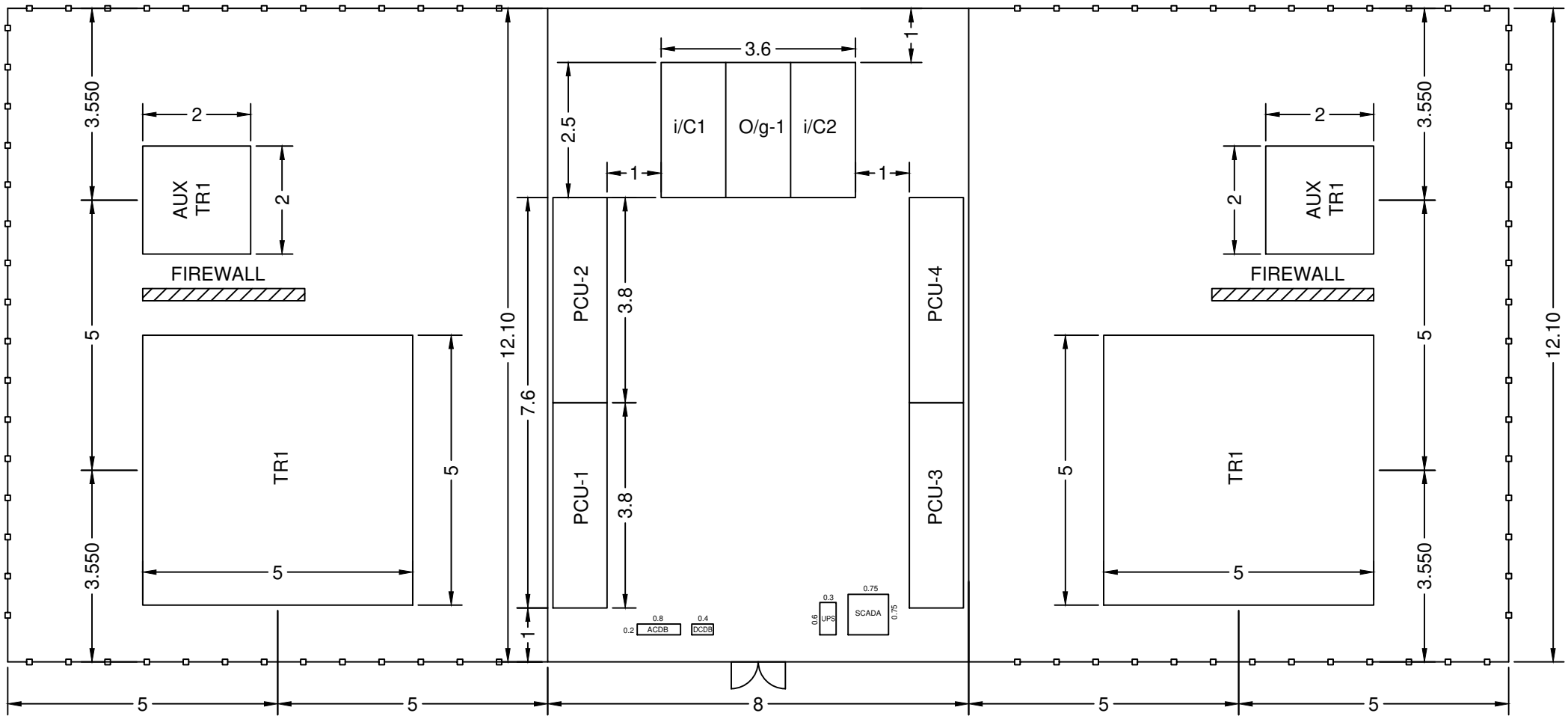

INVERTOR ROOM LAYOUT FOR NTPC 50 MWp

NOTE:

1. ALL THE DIMENSIONS ARE IN METERS.

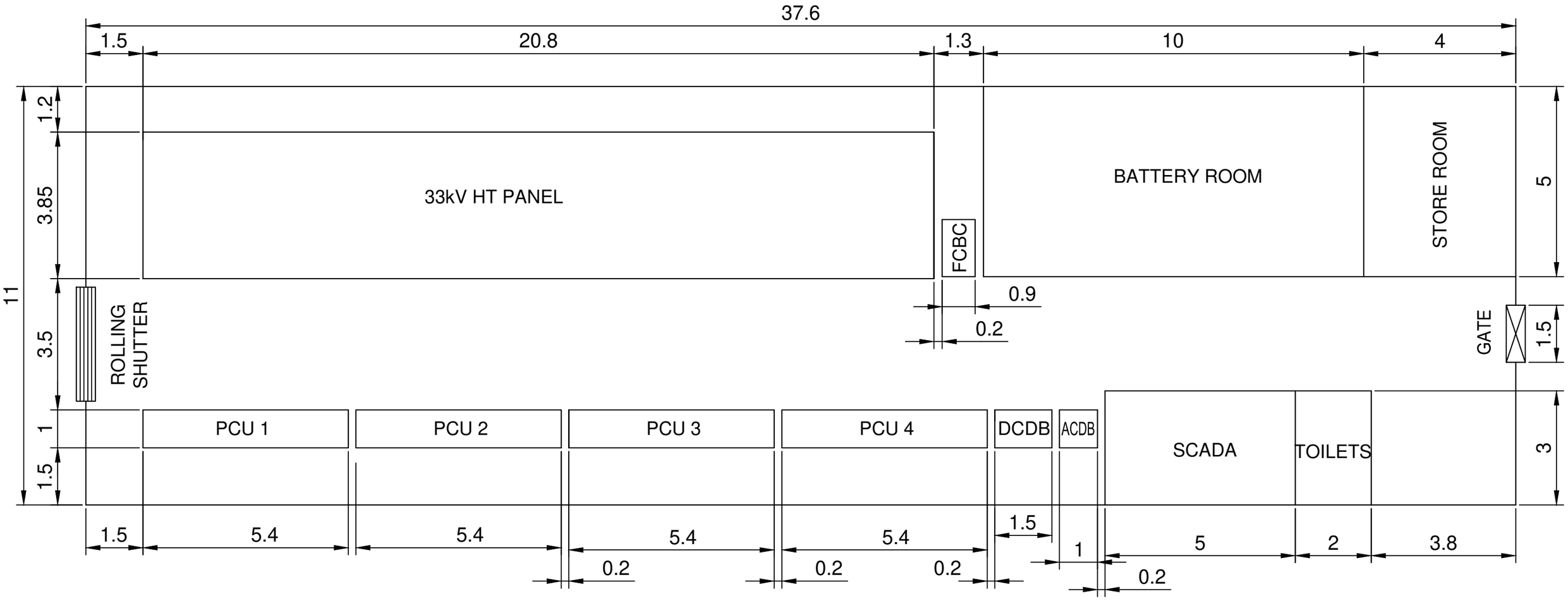

CONTROL ROOM LAYOUT FOR NTPC 50 MWp

NOTE:
1. ALL THE DIMENSIONS ARE IN METERS.

50 MWp SOLAR PV POWER PLANT AT ANANTAPUR DIST

ARRAY DETAILS

PV ARRAY CAPACITY	50 MWp *
Total no.of PV Modules (290Wp)	
PV Modules per series string	
Total No. of strings	8480 nos .
Main Control Room with 2 bays of Switchyard	1 set
No. of Inverter rooms	
Center to center Inter Row Gap	
Land Area	

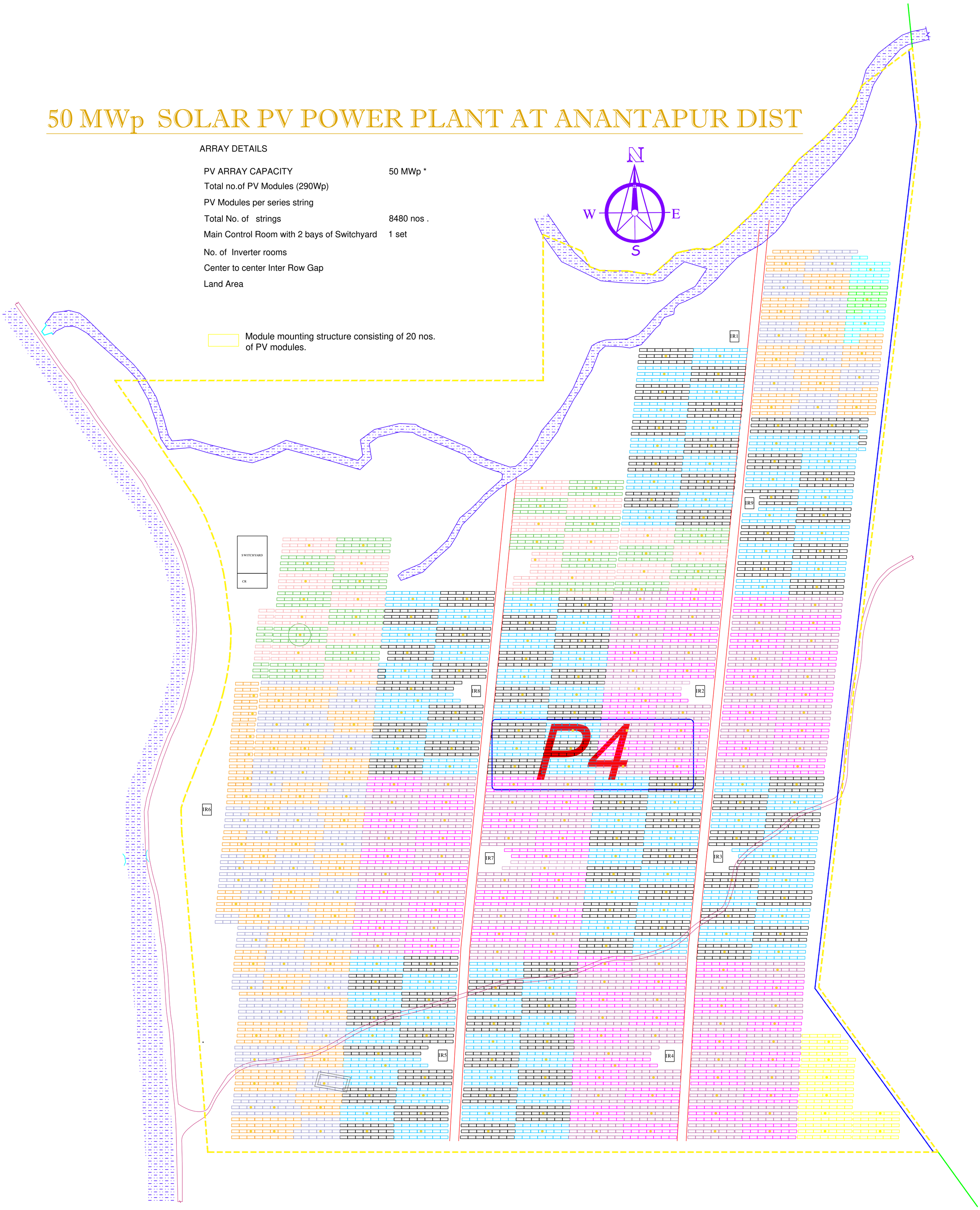

FIRST ANGLE PROJECTION

DRAWING NO. BH-NT-AN-DC-086

ALL DIMENSIONS ARE IN mm

COPYRIGHT AND CONFIDENTIAL
The information on this document is the property of Bharat Heavy Electricals Limited.
It may not be used, copied or reproduced by any person or company in the course of any Company business or otherwise, nor may it be disclosed to any person or company without the express permission of the Company.

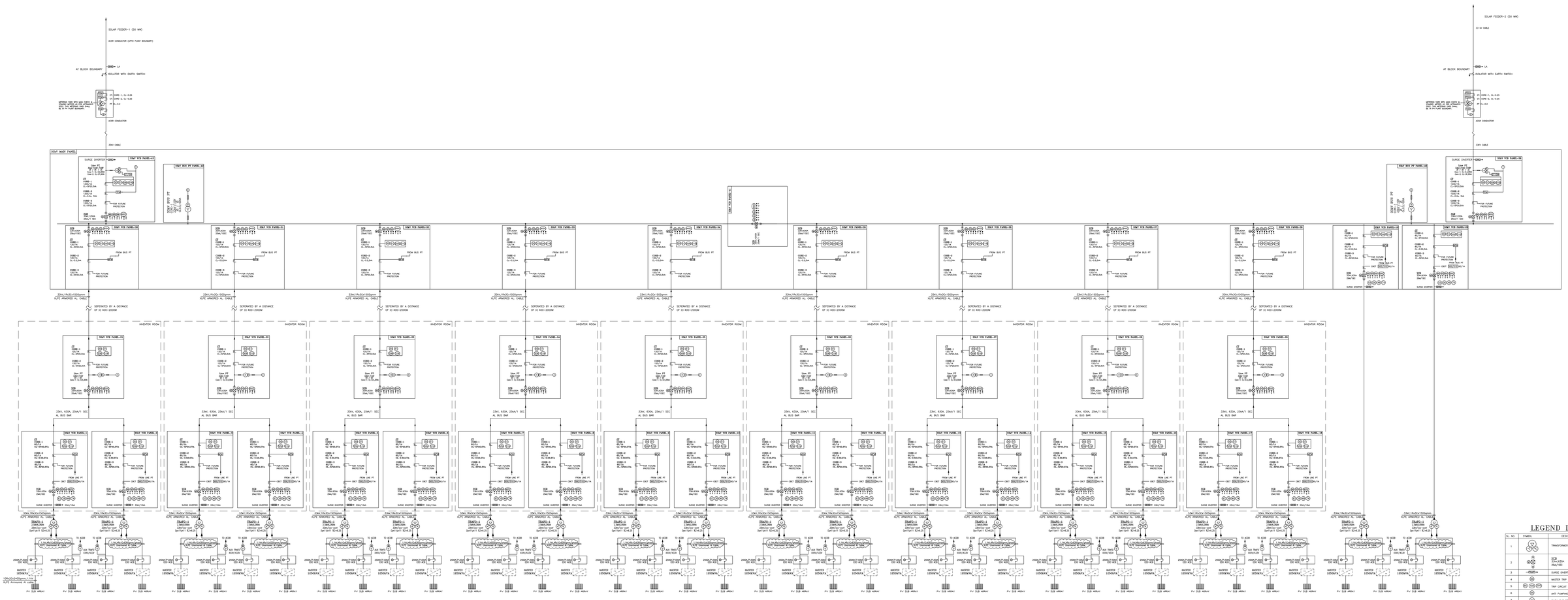

LEGEND DETAILS

SL. NO.	SYMBOL	DESCRIPTION
1		TRANSFORMER
2		SURGE SHORTER, 33kV/10kA
3		SURGE SHORTER, 33kV/10kA
4	86	MASTER TRIP RELAY
5	95 / 95 / 95	TRIP CIRCUIT SUPERVISION RELAY
6	99	ANTI PUMPING RELAY
7	63	BUCHHOLZ RELAY
8	38	MAGNETIC OIL LEVEL GAUGE
9	49	WINDING TEMP INDICATOR AND OIL TEMP INDICATOR
10	94	PRESSURE RELIEF DEVICE
11		VCB ON
12		VCB OFF
13		SPRING CHARGE
14		AUTO TRIP
15		TRIP CIRCUIT HEALTHY
16		SERVICE POSITION
17		TEST POSITION
18		DC FAILURE
19	50	INST OVER CURRENT RELAY
20	51	IDMT OVER CURRENT RELAY
21	50N	NEUTRAL INSTANTANEOUS OVER CURRENT RELAY
22	51N	IDMT EARTH FAULT RELAY
23	MFM	MULTI FUNCTION METER
24		CURRENT TRANSFORMER
25	27	UNDER VOLTAGE RELAY
26	59	OVER VOLTAGE RELAY
27		POTENTIAL TRANSFORMER
28		FUSE
29		LIGHTNING ARRESTOR
30	87T	TRANSFORMER DIFFERENTIAL RELAY
31	86A/T/C	CBCT
32	78	VECTOR SURGE RELAY
33		ISOLATOR WITH EARTH SWITCH
34	50/51	LOCAL BREAKER BACKUP RELAY
35	30	ANNUNCIATION WINDOWS (32 NOs)
36	TM	TARIFF ENERGY METER
37	86HV	DC FAILURE INDICATION
38		INVERTER, 630kVA

REV.	DATE	ALTERED	REV.	DATE	ALTERED	REV.	DATE	ALTERED	REV.	DATE	ALTERED	REV.	DATE	ALTERED	REV.	DATE	ALTERED	REV.	DATE	ALTERED	REV.	DATE	ALTERED	REV.	DATE	ALTERED	REV.	DATE	ALTERED	REV.	DATE	ALTERED
		CHECKED			CHECKED			CHECKED			CHECKED			CHECKED			CHECKED			CHECKED			CHECKED			CHECKED			CHECKED			CHECKED
		APPROVED			APPROVED			APPROVED			APPROVED			APPROVED			APPROVED			APPROVED			APPROVED			APPROVED			APPROVED			APPROVED

REV.	DATE	ALTERED	SAN
		CHECKED	VJ
01	180615	APPROVED	NHK
		DRAWING REVISED AS PER NTPC COMMENTS.	

REV.	DATE	ALTERED
		CHECKED
00		APPROVED
		FIRST ISSUE

	NAME	SIGN	DATE
DRAWN	SAN		210515
CHECKED	VJ		210515
APPROVED	NHK		210515

DISTRIBUTION OF PRINTS

DEPT.	CODE
SC&PV	439

PROJECT : 50MW SOLAR POWER PLANT
CUSTOMER : NTPC-ANANTAPUR

BHARAT HEAVY ELECTRICALS LIMITED.
ELECTRONICS DIVISION, BANGALORE

TITLE: SINGLE LINE DIAGRAM-AC

No. OF SHEETS	01
SHEET No.	01
REV	01

NTPC DRG.NO. 5711-004-P4-PVE-P-086

BHEL DRG. No. BH-NT-AN-DG-086

A0 SIZE

SIGN & DATE | REF. DRG.NO. | INVENTORY NO.

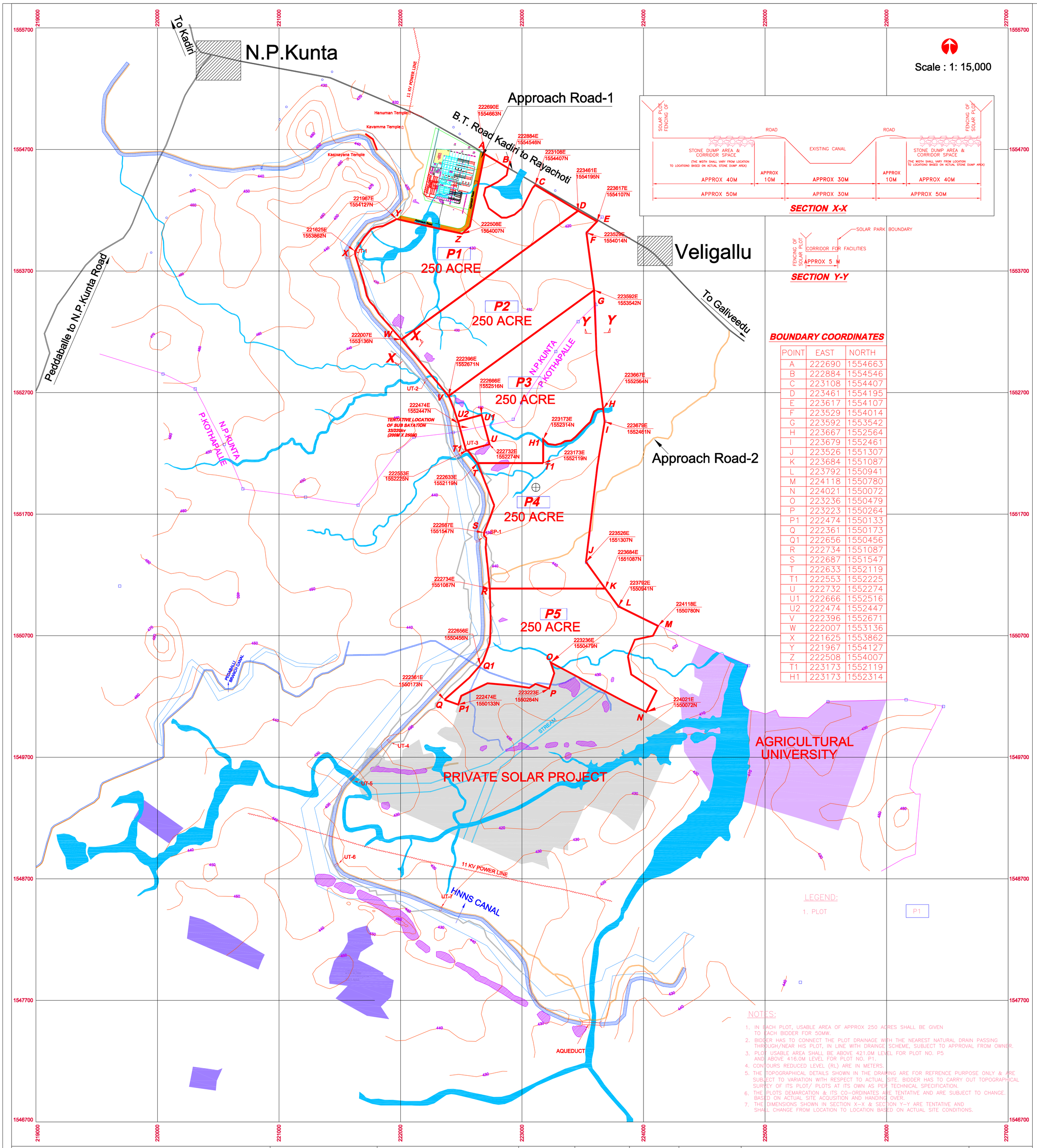

BOUNDARY COORDINATES

POINT	EAST	NORTH
A	222690	1554663
B	222884	1554546
C	223108	1554407
D	223461	1554195
E	223617	1554107
F	223529	1554014
G	223592	1553542
H	223667	1552564
I	223679	1552461
J	223526	1551307
K	223684	1551087
L	223792	1550941
M	224118	1550780
N	224021	1550072
O	223236	1550479
P	223223	1550264
P1	222474	1550133
Q	222361	1550173
Q1	222656	1550456
R	222734	1551087
S	222687	1551547
T	222633	1552119
T1	222553	1552225
U	222732	1552274
U1	222666	1552516
U2	222474	1552447
V	222396	1552671
W	222007	1553136
X	221625	1553862
Y	221967	1554127
Z	222508	1554007
T1	223173	1552119
H1	223173	1552314

NOTES:

1. IN EACH PLOT, USABLE AREA OF APPROX 250 ACRES SHALL BE GIVEN TO EACH BIDDER FOR 50MW.
2. BIDDER HAS TO CONNECT THE PLOT DRAINAGE WITH THE NEAREST NATURAL DRAIN PASSING THROUGH/NEAR HIS PLOT, IN LINE WITH DRAINGE SCHEME, SUBJECT TO APPROVAL FROM OWNER.
3. PLOT USABLE AREA SHALL BE ABOVE 421.0M LEVEL FOR PLOT NO. P5 AND ABOVE 416.0M LEVEL FOR PLOT NO. P1.
4. CONTOURS REDUCED LEVEL (RL) ARE IN METERS.
5. THE TOPOGRAPHICAL DETAILS SHOWN IN THE DRAWING ARE FOR REFRENCE PURPOSE ONLY & ARE SUBJECT TO VARIATION WITH RESPECT TO ACTUAL SITE. BIDDER HAS TO CARRY OUT TOPOGRAPHICAL SURVEY OF ITS PLOT/ PLOTS AT ITS OWN AS PER TECHNICAL SPECIFICATION.
6. THE PLOTS DEMARCATION & ITS CO-ORDINATES ARE TENTATIVE AND ARE SUBJECT TO CHANGE. BASED ON ACTUAL SITE ACQUSITION AND HANDING OVER.
7. THE DIMENSIONS SHOWN IN SECTION X-X & SECTION Y-Y ARE TENTATIVE AND SHALL CHANGE FROM LOCATION TO LOCATION BASED ON ACTUAL SITE CONDITIONS.

NOTE :

1. ALL DIMENSIONS ARE IN METERS.
2. GRID LINES ARE DRAWN A 1000m X 1000m INTERVAL.
3. CONTOUR INTERVAL 2.00 MTR.

GENERAL :		LEGEND :		CANAL AS PER REVENUE MAP	SCALE :	1 : 15,000
VILLAGE	P.KOTHAPALLE & N.P.KUNTA			STREAMS	DRN BY : M.R	DATE : 06-12-2014
TALUK	KADIRI	ASSIGNED LAND		VILLAGE BOUNDARY	CHK BY : K.D.L	DATE : 08-12-2014
DISTRICT	ANANTHAPUR				TYPE OF DWG	AUTO CAD
STATE	ANDHRA PRADESH			B.T. ROADS, ROADS	DRAWING NO.	REV-01/08-12-14
LEGEND :				STONES	CAD FILE NAME	REVISED TOPO MAP
10 M CONTOUR		SALES OCCURRED LANDS		TEMPLE,		
		EXCAVATED CANAL		AQUEDUCT		

PROJECT : 1000 MW SOLAR POWER PROJECT AT N.P.KUNTA SITE, ANANTHAPUR DISTRICT,

SUB. DATE : 08-12-2014

TITLE : REV TOPO MAP OF P. KOTHAPALLE & N.P.KUNTA VILLAGES

CLIENT : NREDCAP LTD. REGD. OFF. 5-8-207/2, PISGAH COMPLEX, NAMPALLY, HYDERABAD.

SURVEYED BY : TOP VIEW INFRATECH INDIA PVT.LTD
F-204,Viswa Central, Nizamia Observatory Road, Near Lalbunglow, Ameerpet, Hyderabad-500016.
Ph:040-65451076, Mobile: 9440151076
E-mail - info@topviewtech.com
www.topviewtech.com

TOTAL AREA OF SURVEY NO. 539 & 679 = APPROX. 7200 ACRES

REV.NO.	DESCRIPTION	DRAWN	DESIGN	CHKD.	M	E	C	C&I	ES	APPD	DATE
F	PLOTS LAYOUT REVISED AFTER INCORPORTING PGCIL SWITCHYARD REVISED LAYOUT LEAVING 12.5 ACRES PLOT	MANOJ	CMV								09.05.15
E	PLOTS LAYOUT REVISED AFTER INCORPORTING PGCIL SWITCHYARD LOCATION/LAYOUT	MANOJ	CMV								29.04.15
D	FOR TENDER PURPOSE ONLY	MANOJ	CMV								26.12.14
C	FOR TENDER PURPOSE ONLY	MANOJ	CMV								05.11.14
B	FOR TENDER PURPOSE ONLY	MANOJ	CMV								14.10.14
A	FOR TENDER PURPOSE ONLY	MANOJ	CMV								25.09.14
		BINU			CLEARED BY						

एन टी पी सी NTPC

NTPC Limited

(A GOVERNMENT OF INDIA ENTERPRISE)
ENGINEERING DIVISION

PROJECT: DEVELOPMENT OF 250MW (5X50MW) SOLAR PV PROJECT IN ANANTAPUR DISTRICT OF AP

TITLE: VICINITY MAP

SIZE	SCALE	DRG. NO.	REV. NO.
A0	——	5711-004-POC-A-001	F

FILE NAME : 5711-004-POC-A-001

GENERAL CONDITIONS

OF

CONTRACT

2019

ಭಾರತ್ ಹೆವಿ ಎಲೆಕ್ಟ್ರಿಕಲ್ಸ್ ಲಿಮಿಟೆಡ್, ವಿದ್ಯುನ್ಮಾನ ವಿಭಾಗ, ಬೆಂಗಳೂರು

भारत हेवी इलेक्ट्रिकल्स लिमिटेड, इलेक्ट्रानिक्स डिवीज़न, बेंगलुरु

Bharat Heavy Electricals Limited, Electronics Division, Bengaluru

CONTENTS

Chapter-1

1. General Instructions to Tenderers

1.1. Dispatch Instructions

1.2. Submission of Tenders

1.3. Language

1.4. Price Discrepancy

1.5. Evaluation of Bids

1.6. Data to be enclosed

1.7. Authorisation and Attestation

1.8. Earnest Money Deposit

1.9. Security Deposit

1.10. Return of Security Deposit

1.11. Bank Guarantee

1.12. Validity of offer

1.13. Execution of Contract Agreement

1.14. Rejection of Tender and other Conditions

1.15 BHEL Fraud Prevention Policy

2. Chapter-2

2.1. Definitions

2.2. Law Governing Contract and Court Jurisdiction

2.3. Issue of Notice

2.4. Use of land

2.5. Commencement of Work

2.6. Measurement of Work and Mode of Payment

2.7. Rights of BHEL

2.8. Responsibilities of Contractor in respect of Local Laws, Employment of Workers etc

2.9. Progress Monitoring, Monthly Review and Performance Evaluation

2.10. Time of Completion

2.11. Extension of Time for Completion

2.12. Over Run Compensation

2.13. Quantity Variation

2.14. Extra Works

2.15. Supplementary Items

2.16. Strikes & Lockout

2.17. Force Majeure

2.18. Arbitration and Reconciliation

2.19. Payments

2.20. Performance Guarantee for Workmanship

2.21. Closing of Contracts

2.22. Reverse Auction

2.23. Suspension of Business Dealings

2.24. Other Issues

CHAPTER -1

1. GENERAL INSTRUCTION TO TENDERERS

1.1. DESPATCH INSTRUCTION

i) The General Conditions of Contract form part of the Tender specifications. All pages of the tender documents shall be duly signed, stamped and submitted along with the offer in token of complete acceptance thereof. The information furnished shall be complete by itself. The tenderer is required to furnish all the details and other documents as required in the following pages

ii) Tenderers are advised to study all the tender documents carefully. Any submission of tender by the tenderer shall be deemed to have been done after careful study and examination of the tender documents and with the full understanding of the implications thereof. Should the tenderers have any doubt about the meaning of any portion of the Tender Specification or find discrepancies or omissions in the drawings or the tender documents issued are incomplete or shall require clarification on any aspects, the scope of work etc., he shall contact the authority inviting the tender well in time (so as not to affect last date of submission) for clarification before the submission of the tender. Tenderer's request for clarifications shall be with reference to Sections and Clause numbers given in the tender documents. The tender specifications and terms and conditions shall be deemed to have been accepted by the tenderer in the offer. Pre requirements and conditions shall be liable for rejection.

iii) Integrity pact (IP): If NIT calls for Integrity Pact, the same shall be duly signed & stamped by the authorised signatory & submitted along with tender document.

1.2. SUBMISSION OF TENDERS

1.2.1 The tenderers must submit their tenders as per instructions in the NIT

1.2.2 BHEL takes no responsibility for delay, loss or non-receipt of tenders sent by post/courier. The tenders received after the specified time of their submission are treated as 'Late Tenders' and shall not be considered under any circumstances. Offers received by Fax/Email/Internet shall be considered as per terms of NIT.

1.2.3 Tenders shall be opened by authorised Officer of BHEL at his office at the time and date as specified in the NIT, in the presence of such of those tenderers or their authorised representatives who may be present

1.2.4 Tenderers whose bids are found techno commercially qualified shall be informed the date and time of opening of the Price Bids and such Tenderers may depute their representatives to witness the opening of the price bids. BHEL's decision in this regard shall be final and binding.

1.2.5 Before submission of Offer, the tenderers are advised to inspect the site of work and the environments and be well acquainted with the actual working and other prevalent conditions, facilities available, position of material and labour, means of transport and access to Site, accommodation, etc. No claim will be entertained later on the grounds of lack of knowledge of any of these conditions.

1.3. ***LANGUAGE***

1.3.1 The tenderer shall quote the rates in English language and international numerals. These rates shall be entered in figures as well as in words. For the purpose of the tenders, the metric system of units shall be used.

1.3.2 All entries in the tender shall either be typed or written legibly in ink. Erasing and over-writing is not permitted and may render such tenders liable for rejection. All cancellations and insertions shall be duly attested by the tenderer.

1.4 ***PRICE DISCREPANCY:***

1.4.1 Conventional (Manual) Price Bid opening:

i) If, in the price structure quoted for the required goods/services/works, there is discrepancy between the unit price and the total price (which is obtained by multiplying the unit price by the quantity), the unit price shall prevail and the total price corrected accordingly, unless in the opinion of BHEL there is obvious misplacement of decimal point in the unit price, in which case the total price as quoted shall govern and the unit price corrected accordingly

ii) If there is an error in a total corresponding to the addition or subtraction of subtotals, the subtotals shall prevail and the total shall be corrected;

iii) If there is a discrepancy between words and figures, the amount in words shall prevail, unless the amount expressed in words is related to an arithmetic error, in which case the amount in figures shall prevail subject of (i) and (ii) above.

iv) If there is such discrepancy in an offer, the same shall be conveyed to the bidder with target date up to which the bidder has to send his acceptance on the above lines and if the bidder does not agree to the decision of BHEL, the bid is liable to be ignored.

v) In case of lump sum price, if there is any difference between the amount in figures and in words, the amount quoted by the bidder in words shall be taken as correct.

vi) In case of omission in quoting any rate for one or more items, the evaluation shall be done considering the highest quoted rate obtained against the respective items by other tenderers for the subject tender. If the tenderer becomes L-1, the notional rates for the omission items shall be the lowest rates quoted for the respective items by the other tenderers against the respective omission items for the subject job and the 'Total quoted price (loaded for omissions)' shall be arrived at. However the overall price remaining the same as quoted originally, the rates for all the items in the 'Total quoted price (loaded for omissions)' shall be reduced item wise in proportion to the ratio of 'Original' total price and the 'Total quoted price (loaded for omissions)".

1.4.2 Reverse Auction: In case of Reverse Auction, the successful bidder shall undertake to execute the work as per overall price offered by him during the Reverse Auction process. In case of omission of rates, the procedure shall be as per 'Guidelines for Reverse Auction' enclosed.
i) Offers from tenderers who are under suspension (banned) by any Unit/Region/Division of BHEL shall not be considered.
ii) Offers from tenderers who do not comply with the latest guidelines of Ministry/ Commissions of Govt of India shall not be considered.

1.5. ***EVALUATION OF BIDS***

i) Technical Bids submitted by the tenderer will be opened first and evaluated for fulfilling the Pre-Qualification criteria and other conditions in NIT/Tender documents, based on documentary evidences submitted along with the offer, BHEL reserves the right to ask for proofs/documents, clarification in relation to Technical/commercial data during tender evaluation

ii) Price Bids of shortlisted bidders shall only be opened either through the conventional price bid opening or through electronic Reverse Auction, at the discretion of BHEL

iii) Price Bids of unqualified bidders shall not be opened. Reasons for rejection shall be intimated to the vendor before the opening of Price bid.

1.6. ***DATA TO BE ENCLOSED***

The following information in full shall be furnished by the tenderer. Non-submission of this information may lead to rejection of the offer.

i) INCOME TAX PERMANENT ACCOUNT NUMBER, GSTIN, SAC, HSN Certified copies of PAN, GSTIN shall be furnished along with tender. The names, addresses and contact information of the Directors/Partners shall be furnished along with the offer.

ii) An attested copy of the Power of Attorney, in case the tender is signed by an individual other than the sole proprietor.

iii) IN CASE OF INDIVIDUAL TENDERER:

His / her full name, address, PAN, GSTIN and place & nature of business to be furnished.

iv) IN CASE OF PARTNERSHIP FIRM

The names of all the partners and their addresses, a copy of the partnership deed/instrument of partnership shall be enclosed.

v) IN CASE OF COMPANIES:

Date and place of registration including date of commencement certificate in case of Public Companies (certified copies of Memorandum and articles of Association are also to be furnished). Nature of business carried on by the Company and the provisions of the Memorandum relating thereof.

*1.7. **AUTHORISATION AND ATTESTATION***

Tenders shall be signed by a person duly authorised/empowered to do so. An attested copy of the Power of Attorney, in case the tender is signed by an individual other than the sole proprietor shall be submitted along with the tenders

*1.8. **EARNEST MONEY DEPOSIT***

1.8.1 Every tender must be accompanied by the prescribed amount of Earnest Money Deposit (EMD) in the manner described herein.

The EMD may be accepted only in the following forms:
(i) Electronic Fund Transfer credited in BHEL account (before tender opening)
(ii) Banker's cheque/ Pay order/ Demand draft, in favor of BHEL (along with offer)In case total EMD amount is more than Rs 20 Lakh, the amount in excess of Rs 20 lakh maybe accepted in the form of Bank Guarantee from scheduled bank. The Bank Guarantee in such cases shall be valid for at-least six months.
(iii) Through SBI collect (before tender opening)
(iv) No other form of EMD remittance shall be acceptable to BHEL

1.8.2 EMD by the bidder will be forfeited as per Tender Documents if

i) After opening the tender and within the offer validity period, the tenderer revokes his/her tender or makes any modification in his tender which is not acceptable to BHEL.
ii) The Contractor fails to deposit the required Security deposit or commence the work within the period as per LOI/ Contract.
iii) EMD by the tenderer shall be withheld in case any action on the tenderer is envisaged in derailing the tender process by unlawful means

1.8.3 EMD shall not carry any interest.

1.8.4 In the case of unsuccessful bidders, the Earnest Money will be refunded to them within a reasonable time after acceptance of award by successful tenderer.

1.8.5 EMD of successful tenderer will be converted as part of Security Deposit

*1.9. **SECURITY DEPOSIT***

The total amount of Security Deposit will be 5% of the contract value (including all applicable taxes) EMD of the successful tenderer shall be converted and adjusted towards the required amount of Security Deposit.

1.9.1 Modes of Security deposit:

The balance amount to make up the required Security Deposit of 5% of the contract value may be accepted in the following forms:
i) Cash (as permissible under the extant Income Tax Act)
ii) Local cheques of Scheduled Banks (subject to realization)/ Pay Order/ Demand Draft/ Electronic Fund Transfer in favour of BHEL
iii) Bank Guarantee from Scheduled Banks/ Public Financial Institutions as defined in the Companies Act. The Bank Guarantee format should have the approval of BHEL
iv) Fixed Deposit Receipt issued by Scheduled Banks/ Public Financial Institutions as defined in the Companies Act (FDR should be in the name of the Contractor, a/c BHEL)
v) Securities available from Indian Post offices such as National Savings Certificates, Kisan Vikas Patras etc. (held in the name of Contractor furnishing the security and duly endorsed/ hypothecated/ pledged, as applicable, in favour of BHEL) (Note: BHEL will not be liable or responsible in any manner for the collection of interest or renewal of the documents or in any other matter connected therewith)
vi) 50% of the required Security Deposit, including the EMD, should be paid before start of the work. Balance of the Security Deposit can be collected by deducting10% of the gross amount progressively from each of the running bills of the Contractor till the total amount of the required Security Deposit is collected. If the value of work done at any time exceeds the contract value, the amount of Security Deposit shall be correspondingly enhanced and the additional Security Deposit shall be immediately deposited by the Contractor or recovered from payment/s due to the Contractor. Security Deposit shall be released to the Contractor upon fulfilment of contractual obligations as per terms of the contract.

1.9.2 The Security Deposit shall not carry any interest.

1.9.3 The validity of Bank Guarantees towards Security Deposit shall be initially up to the completion period as stipulated in the Letter of Intent/Award (plus maintenance period if applicable), and 03 months claim period. The same shall be kept valid by proper renewal till the acceptance of Final Bills of the Contractor, by BHEL

1.9.4 BHEL reserves the right of forfeiture of Security Deposit in addition to other claims and penalties in the event of the Contractor's failure to fulfill any of the contractual obligations or in the event of termination of contract as per terms and conditions of contract. BHEL reserves the right to set off the Security Deposit against any claims of other contracts with BHEL.

1.10. ***REFUND OF SECURITY DEPOSIT***

50% of the security deposit may be refunded on completion of the work after payment of the final bill and the balance 50% of the security deposit is refunded only after the expiry of the maintenance period from date of completion of work as stipulated in the contract concerned.

1.10.1 *DEFECTS LIABILITY PERIOD:*

The contractor shall be responsible to make good and remedy at his own expenses within such period as may be stipulated by the Engineer-in-charge, any defect which may develop or may be noticed before the expiry of the maintenance period of six months or as stipulated in NIT hereto from the certified date of completion and intimation of which has been sent to the contractor within seven days of the expiry of the said period by a letter sent by hand delivery or by registered post or Email. If contractor fails to attend to the above, defect will be rectified at contractor's risk & cost and same will be deducted from the security deposit/payable amounts available with BHEL.

1.11. ***BANK GUARANTEES***

Where ever Bank Guarantees are to be furnished/submitted by the contractor, the following shall be complied with

i) Bank Guarantees shall be from Scheduled Banks / Public Financial Institutions as defined in the Companies Act.

ii) The Bank Guarantees shall be as per prescribed BHEL formats.

iii) It is the responsibility of the bidder to get the Bank Guarantees revalidated/extended for the required period (subject to a minimum period of six months), as per the advice of BHEL. BHEL shall not be liable for issue of any reminders regarding expiry of the Bank Guarantees.

iv) In case extension/further extensions of any Bank Guarantees are not required, the bidders shall ensure that the same is explicitly endorsed by BHEL

v) In case the Bank Guarantees are not extended before the expiry date, BHEL reserves the right to invoke the same by informing the concerned Bank in writing, without any advance notice/communication to the concerned bidder.

vi) Bidders to note that any corrections to Bank Guarantees shall be done by the issuing Bank, only through an amendment in an appropriate non judicial stamp paper.

vii) The Original Bank Guarantee shall be sent directly by the Bank to BHEL under Registered Post (Acknowledgement Due).

1.12. VALIDITY OF OFFER

The rates in the Tender shall be kept open for acceptance for a minimum period of Ninety (90) DAYS from latest due date of offer submission (including extension, if any). In case BHEL calls for negotiations, such negotiations shall not amount to cancellation or withdrawal of the original offer which shall be binding on the tenderers.

1.13 EXECUTION OF CONTRACT AGREEMENT

The successful tenderer's responsibility under this contract commences from the date of issue of the Letter of Intent by BHEL. The Tenderer shall submit an unqualified acceptance to the Letter of Intent/Award within the period stipulated therein.

The successful tenderer shall be required to execute an agreement in the prescribed form, with BHEL, within fifteen days (15 days) after the acceptance of the Letter of Intent/Award, and in any case before releasing the first running bill. The contract agreement shall be signed by a person duly authorized/empowered by the tenderer. The expenses for preparation of agreement document shall be borne by Tenderer.

1.14. REJECTION OF TENDER AND OTHER CONDITIONS

1.14.1 The acceptance of tender will rest with BHEL which does not bind itself to accept the lowest tender or any tender and reserves to itself full rights for the following without assigning any reasons whatsoever:-

a. To reject any or all of the tenders.

b. To split up the work amongst two or more tenderers as per NIT

c. To award the work in part if specified in NIT

d. In case of either of the contingencies stated in (b) and (c) above, the time for completion as stipulated in the tender shall be applicable.

1.14.2 Conditional tenders, unsolicited tenders, tenders which are incomplete or not in the form specified or defective or have been materially altered or not in accordance with the tender conditions, specifications etc., are liable to be rejected.

1.14.3 Tenders are liable to be rejected in case of unsatisfactory performance of the tenderer with BHEL, or tenderer under suspension (hold/banning /delisted) by any unit / region / division of BHEL or tenderers who do not comply with the latest guidelines of Ministry/Commissions of Govt of India. BHEL reserves the right to reject a bidder in case it is observed that they are overloaded and may not be in a position to execute this job. The decision of BHEL will be final in this regard.

1.14.4 If a tenderer who is a proprietor expires after the submission of his tender or after the acceptance of his tender, BHEL may at their discretion, cancel such tender. If a partner of a firm expires after the submission of tender or after the acceptance of the tender, BHEL may then cancel such tender at their discretion, unless the firm retains its character.

1.14.5 BHEL will not be bound by any Power of Attorney granted by changes in the composition of the firm made subsequent to the execution of the contract. They may, however, recognize such power of Attorney and changes after obtaining proper legal advice, the cost of which will be chargeable to the contractor concerned.

1.14.6 If the tenderer deliberately gives wrong information in his tender, BHEL reserves the right to reject such tender at any stage or to cancel the contract if awarded and forfeit the Earnest Money/Security Deposit/any other money due.

1.14.7 Canvassing in any form in connection with the tenders submitted by the Tenderer shall make his offer liable to rejection.

1.14.8 In case the Proprietor, Partner or Director of the Company/Firm submitting the Tender, has any relative or relation employed in BHEL, the authority inviting the Tender shall be informed, along with the Offer. Failing to do so, BHEL may, at its sole discretion, reject the tender or cancel the contract and forfeit the Earnest Money/Security Deposit.

1.14.9 The successful tenderer should not sub-contract part or complete work detailed in the tender specification undertaken by him without written permission of BHEL's Construction Manager/Site Incharge. The tenderer is solely responsible to BHEL for the work awarded to him.

1.14.10 The Tender submitted by a techno commercially qualified tenderer shall become the property of BHEL who shall be under no obligation to return the same to the bidder. However unopened price bids and late tenders shall be returned to the bidders after finalization of contract.

1.14.11 Unsolicited discount received after the due date and time of Bid Submission shall not be considered for evaluation. However, if the party who has submitted the unsolicited discount/rebate becomes the L-I party, then the awarded price i.e contract value shall be worked out after considering the discount so offered.

1.14.12 BHEL shall not be liable for any expenses incurred by the bidder in the preparation of the tender irrespective of whether the tender is accepted or not.

1.15 ***BHEL Fraud Prevention Policy :***

The bidder along with its associate/ collaborators/sub-contractors/ Sub-Vendors/ Consultants/service providers shall strictly adhere to BHEL Fraud Prevention Policy displayed on BHEL website http://www.bhel.com and shall immediately bring to the notice of BHEL Management about any fraud or suspected fraud as soon as it comes to their notice. Fraud prevention policy and list of Nodal officers shall be hosted on BHEL website, vendor portals of Units/Regions Internet.

CHAPTER-2

2.1 DEFINITION: The following terms shall have the meaning hereby assigned to them except where the context otherwise requires

i) BHEL shall mean Bharat Heavy Electricals Limited, a company registered under Companies Act 1956, with its Registered Office at BHEL HOUSE, SIRI FORT, NEW DELHI – 110 049, or its Authorised Officers or its Site Engineers or other employees authorised to deal with any matters with which these persons are concerned on its behalf.

ii) "EXECUTIVE DIRECTOR" or 'GROUP GENERAL MANAGER' or "GENERAL MANAGER (Incharge)" or "GENERAL MANAGER" shall mean the Officer in Electronics Division, Mysore road, Bengaluru-560026

iii) "COMPETENT AUTHORITY" shall mean Executive Director or Group General Manager or General Manager (In-charge) or General Manager or BHEL Officers who are empowered to act on behalf of the Executive Director or General Manager (In-charge) or General Manager of BHEL.

iv) "ENGINEER" or "ENGINEER IN CHARGE" shall mean an Officer of BHEL as may be duly appointed and authorized by BHEL to act as "Engineer" on his behalf for the purpose of the Contract, to perform the duty set forth in this General Conditions of Contract and other Contract documents. The term also includes 'CONSTRUCTION MANAGER' or 'SITE INCHARGE' as well as Officers

v) "SITE" shall mean the places or place at which the plants/equipment are to be erected and services are to be performed as per the specification of this Tender.

vi) "CLIENT OF BHEL" or "CUSTOMER" shall mean the project authorities with whom BHEL has entered into a contract for supply of equipment or provision of services.

vii) "CONTRACTOR" shall mean the successful Bidder/Tenderer who is awarded the Contract and shall include the Contractor's successors, heirs, executors, administrators and permitted assigns.

viii) "CONTRACT" or "CONTRACT DOCUMENT" shall mean and include the Work Order, Contract Agreement, the accepted appendices of Rates, Schedules, Quantities if any, General Conditions of Contract, Special Conditions of Contract, Instructions to the Tenderers, Drawings, Technical Specifications, the Special Specifications if any, the Tender documents, subsequent amendments mutually agreed upon and the Letter of Intent/Acceptance issued by BHEL. Any conditions or terms stipulated by the contractor in the tender documents or subsequent letters shall not form part of the contract unless, specifically accepted in writing by BHEL in the Letter of Intent/Award and incorporated in the agreement.

ix) "GENERAL CONDITIONS OF CONTRACT" shall mean the 'Instructions to Tenderers' and 'General Conditions of Contract' pertaining to the work for which above tenders have been called for.

x) "TENDER SPECIFICATION" or "TENDER" or "TENDER DOCUMENTS" shall mean General Conditions, Common Conditions, Special Conditions, Price Bid, Rate Schedule, Technical Specifications, Appendices, Annexures, Corrigendum's, Amendments, Forms, procedures, Site information, etc and drawings/documents pertaining to the work for which the tenderers are required to submit their offers. Individual specification number will be assigned to each Tender Specification.

xi) "LETTER OF INTENT" shall mean the intimation by a Post/Fax/email to the tenderer that the tender has been accepted in accordance with provisions contained in the letter. The responsibility of the contractor commences from the date of issue of this letter and all terms and conditions of the contract are applicable from this date.

xii) "COMPLETION TIME" shall mean the period by 'date/month' specified in the 'Letter of Intent/Award' or date mutually agreed upon for handing over of the intended scope of work, the erected equipment/plant which are found acceptable by the Engineer, being of required standard and conforming to the specifications of the Contract.

xiii) "PLANT" shall mean and connote the entire assembly of the plant and equipment's covered by the contract.

xiv) "EQUIPMENT" shall mean equipment, machineries, materials, structural, electrical and other components of the plant covered by the contract.

xv) "TESTS" shall mean and include such test or tests to be carried out on the part of the contractor as are prescribed in the contract or considered necessary by BHEL, in order to ascertain the quality, workmanship, performance and efficiency of the contractor or part thereof.

xvi) "APPROVED", "DIRECTED" or "INSTRUCTED" shall mean approved, directed or instructed by BHEL.

xvii) "WORK or CONTRACT WORK" shall mean and include supply of all categories of labour, specified consumables, tools and tackles and Plants required for complete and satisfactory site transportation, handling, stacking, storing, erecting, testing and commissioning of the equipment's to the entire satisfaction of BHEL.

xviii) "SINGULAR AND PLURALS ETC" words carrying singular number shall also include plural and vice versa, where the context so requires. Words imparting the masculine Gender shall be taken to include the feminine Gender and words imparting persons shall include any Company or Associations or Body of Individuals, whether incorporated or not.

xix) "HEADING" – The heading in these General Conditions are solely for the purpose of facilitating reference and shall not be deemed to be part thereof or be taken as instructions thereof or of the contract.

xx) "MONTH" shall mean calendar month unless otherwise specified in the Tender.

xxi) Day' or 'Days' unless herein otherwise expressly defined shall mean calendar day or days of twenty four (24) hours each. A week shall mean continuous period of seven (7) days.

xxii) "COMMISSIONING" shall mean the synchronization testing and achieving functional operation of the Equipment with associated system after all initial adjustments, trials, cleaning, re-assembly required at site if any, have been completed and Equipment with associated system is ready for taking into service.

xxiii) "WRITING" shall include any manuscript type written or hand written or printed statement or electronically transmitted messages, under the signature or seal or transmittal of BHEL.

xxiv) "TEMPORARY WORK" shall mean all temporary works for every kind required in or for the execution, completion, maintenance of the work.

xxv) 'CONTRACT PRICE' or 'CONTRACT VALUE' shall mean the sum including applicable taxes mentioned in the LOI/LOA/Contract Agreement subject to such additions thereto or deductions there from as may be made under provisions hereinafter contained

xxvi) "COMMENCEMENT DATE" or "START DATE" shall mean the commencement/start of work at Site as per terms defined in the Tender

xxvii) "SHORT CLOSING" or "FORE CLOSING" of Contract shall mean the premature closing of Contract, for reasons not attributable to the contractor and mutually agreed between BHEL and the contractor

xxviii) "TERMINATION" of Contract shall mean the pre mature closing of contract due to reasons as mentioned in the contract

2.2 LAW GOVERNING THE CONTRACT AND COURT JURISDICTION

The contract shall be governed by the Law for the time being in force in the Republic of India. The Civil Court having original Civil Jurisdiction at Bengaluru, shall alone have exclusive jurisdiction in regard to all claims in respect of the Contract. No other Civil Court shall have jurisdiction in case of any dispute, under this contract

2.3 ISSUE OF NOTICE

2.3.1 Service of notice on contractor: Any notice to be given to the Contractor under the terms of the contract shall be served by sending the same by Registered Post / Speed Post / FAX / Email to or leaving the same at the Contractor's last known address of the principal place of business (or in the event of the contractor being a company, to or at its Registered Office). In case of change of address, the notice shall be served at changed address as notified in writing by the Contractor to BHEL. Such posting or leaving of the notice shall be deemed to be good service of such notice and the time mentioned to the condition for doing any act after notice shall be reckoned from the date so mentioned in such notice.

2.3.2 Service of notice on BHEL Any notice to be given to BHEL in-charge under the terms of the Contract shall be served by sending the same by post or Email or leaving the same at BHEL address or changed address as notified in writing by BHEL to the Contractor.

2.4 USE OF LAND

No land belonging to BHEL or their Customer under temporary possession of BHEL shall be occupied by the contractor without written permission of BHEL.

2.4.1 STORES AND MATERIALS:

The contractor shall, at his own expense, supply all stores and materials required for the contract, other than those which may be provided by BHEL at the rates detailed therein subject to their availability at the place of issue indicated therein. All stores and materials to be supplied by the Contractor shall be of the best kind as described in the Specifications and the Contractor shall, if required by the Engineer –in- charge furnish him with proof to his satisfaction that the store and materials so comply with the specifications.

The contractor shall, at his own expense and without delay, supply samples of stores and materials proposed to be used in the execution of the work for the approval of the Engineer-in charge, who may reject all stores and materials not corresponding either in quality or character to the approved samples.

In the case of stores provided by BHEL, the Contractor shall bear the cost of loading, transporting to site, unloading, storing under cover as required, assembling & jointing the several parts together as necessary and incorporating & fixing these stores & materials in the work, including all preparatory work of whatever description that may be required, and closing, preparing, loading and returning empty cases or containers to the place of issue without any extra charges.
Contractor is responsible for safe & secure storage of above material.

2.4.2 PATENT RIGHTS:

The contractor shall fully indemnify BHEL, or the agent, servant, or employee of BHEL, against any action, claim or proceeding relating to infringement or the use of any patent or design or any alleged patent or design rights, and shall pay any royalties which may be payable in respect of any article/ or part thereof included in the contract.

In the event of any claims being made or action brought against BHEL, or any agent, or servant or employee of BHEL., in respect of any of the matters aforesaid, the contractor shall not apply when such increment has taken place in complying with the specific directions issued by the BHEL but the contractor shall pay any royalties payable in respect of any such use.

2.4.3 WATER :

The contractor shall allow in his tender and provide at his cost all water required for the work or his employees on the work, together with all pipes and fittings or other means that may be necessary or required to ensure a proper and ample supply of water for all purpose connected with the work.

In the event of a provision existing in the Tender documents for supply of water on payment by BHEL, water will be supplied from the BHEL supply System, or other sources at any points fixed by the Site Engineer/ Engineer-in-charge on the site of work. The contractor shall make necessary arrangement for lifting, pumping, carrying or conveying the water as required at his own cost. The levy of water charges to be borne by the Contractor in such case shall be specifically mentioned in the Tender documents.

2.4.4 TEMPORARY WORKSHOPS, STORES ETC :

The Contractor shall, during the progress of the work provide, erect and maintain at his own expense all necessary temporary workshops, store, offices, toilets etc., required for the proper and efficient execution of the work. The planning, siting and erection of these building shall have the approval of the Engineer-in-charge and the Contractor shall at all times keep them in a clean and sanitized condition to the entire satisfaction of the Engineer-in-charge.

On completion of the work all such temporary buildings shall be cleared and the site restored to its original state in a clean and tidy condition to the entire satisfaction of the Engineer-in-charge.

2.5 COMMENCEMENT OF WORK

2.5.1 Time is essence of contract and is specified in the tender document or in each individual work order.

2.5.2 The contractor shall commence the work within seven(07) days from LOI/work order or as intimated by BHEL and shall proceed with the same with due expedition without delay.

2.5.3 If the contractor fails to start the work within stipulated time as per LOI or as intimated by BHEL, then BHEL at its sole discretion will have the right to cancel the contract. The Earnest Money and/or Security Deposit with BHEL will stand forfeited without any further reference to him without prejudice to any and all of BHEL's other rights and remedies in this regard.

2.5.4 All the work shall be carried out under the direction and to the satisfaction of BHEL.

2.6 ***MEASUREMENT OF WORK AND MODE OF PAYMENT:***

2.6.1 All payments due to the contractors shall be made by electronic mode only, unless otherwise found operationally difficult.

2.6.2 For progress running bill payments: - The Contractor shall present detailed measurement sheets in triplicate, duly indicating all relevant details based on technical documents and connected drawings for work done during the month/period under various categories in line with terms of payment as per contract. The basis of arriving at the quantities, weights shall be relevant documents and drawings released by BHEL. These measurement sheets shall be prepared jointly with BHEL Engineers and signed by both the parties.

2.6.3 These measurement sheets will be checked by BHEL Engineer and quantities and percentage eligible for payment under various groups shall be decided by BHEL Engineer. The abstract of quantities and percentage so arrived at based on the terms of payment shall be entered in Measurement Book and signed by both the parties.

2.6.4 Based on the above quantities, contractor shall prepare the bills in prescribed format and work out the financial value. These will be entered in Measurement Book and signed by both the parties. Payment shall be made by BHEL after effecting the recoveries due from the contractor.

2.6.5 All recoveries due from the contractor for the month/period shall be effected in full from the corresponding running bills unless specific approval from the competent authorities is obtained to the contrary.

2.6.6 Measurement shall be restricted to that portion of work for which it is required to ascertain the financial liability of BHEL under this contract.

2.6.7 The measurement shall be taken jointly by persons duly authorized on the part of BHEL and by the Contractor.

2.6.8 The Contractor shall bear the expenditure involved if any, in making the measurements and testing of materials to be used/used in the work. The contractor shall, without extra charges, provide all the assistance with appliances and other things necessary for measurement.

2.6.9 If at any time due to any reason whatsoever, it becomes necessary to re-measure the work done in full or in part, the expenses towards such re measurements shall be borne by the contractor unless such re measurements are warranted solely for reasons not attributable to contractor.

2.6.10 Passing of bills covered by such measurements does not amount to acceptance of the completion of the work measured. Any left out work has to be completed, if pointed out at a later date by BHEL.

2.6.11 Final measurement bill shall be prepared in the final bill format prescribed for the purpose based on the certificate issued by BHEL Engineer that entire works as stipulated in tender specification has been completed in all respects to the entire satisfaction of BHEL. Contractor shall give unqualified "No Claim" Certificate. All the tools and tackles loaned to him should be returned in satisfactory condition to BHEL. The abstract of final quantities and financial values shall also be entered in the Measurement Books and signed by both parties to the contract. The Final Bill shall be prepared and paid within a reasonable time after completion of work.

2.7 ***RIGHTS OF BHEL***

BHEL reserves the following rights in respect of this contract during the original contract period or its extensions if any, as per the provisions of the contract, without entitling the contractor for any compensation.

2.7.1 To withdraw any portion of work and/or to restrict/alter quantum of work as indicated in the contract during the progress of work and get it done through other agencies to suit BHEL's commitment to its customer or in case BHEL decides to advance the date of completion due to other emergent reasons/ BHEL's obligation to its customer.

2.7.2 To terminate the contract or get any part of the work done through other agency or deploy BHEL's own/hired/otherwise arranged resources , at the risk and cost of the contractor after due notice of a period of two weeks by BHEL, in the event of:-

i) Contractor's continued poor progress

ii) Withdrawal from or abandonment of the work before completion of the work

iii) Contractor's inability to progress the work for completion as stipulated in the contract

iv) Poor quality of work

v) Corrupt act of Contractor

vi) Insolvency of the Contractor

vii) Persistent disregard to the instructions of BHEL

viii) Assignment, transfer, sub-letting of contract without BHEL's written permission

ix) Non fulfillment of any contractual obligations / non-compliance of statutory requirements

x) In the opinion of BHEL, the contractor is overloaded and is not in a position to execute the job as per required schedule

2.7.3 To meet the expenses including BHEL overheads of 35% & Liquidated damage/penalties arising out of "Risk & Cost" as explained above under Sl.No. 2.7.2. BHEL shall recover the amount from any money due from Contractor, from any money due to the Contractor including Security Deposit or by forfeiting any T&P or material of the contractor under this contract or any other contract of BHEL or by any other means or any combination thereof

2.7.4 To terminate the contract or to restrict the quantum of work and pay for the portion of work executed in case BHEL's contract with their customer are terminated for any reason, as per mutual agreement.

2.7.5 To effect recovery from any amounts due to the contractor under this or any other contract or in any other form, the moneys BHEL is statutorily forced to pay to anybody, due to contractor's failure to fulfill any of his obligations. BHEL shall levy overheads of 35% on all such payments.

2.7.6 While every endeavor will be made by BHEL to this end, they cannot guarantee uninterrupted work due to conditions beyond their control. The Contractor will not be normally entitled for any compensation/extra payment on this account unless otherwise specified elsewhere in the contract.

2.7.7 In case the execution of works comes to a complete halt or reaches a stage wherein worthwhile works cannot be executed and there is no possibility of commencement of work for a period of not less than two months, due to reasons not attributable to the contractor and other than Force Majeure conditions, BHEL may consider permitting the contractor to de mobilize forthwith and re mobilize at an agreed future date. Cost of such demobilization/remobilization shall be mutually agreed. ORC (Over run Charges) in such cases shall not be applicable for the period between the period of demobilization and re mobilisation. The duration of contract/time extension shall accordingly get modified suitably. In case of any conflict, BHEL decision in this regard shall be final and binding on the contractor.

2.7.8 In the unforeseen event of inordinate delay in receipt of materials, drawings, fronts, etc, due to which inordinate discontinuity of work is anticipated, BHEL at its discretion may consider contractor's request to short close the contract, provided that the balance works are minor vis a vis the scope of work envisaged as per the contract. At the point of requesting for

short closure, contractor shall establish that he has completed all works possible of completion and he is not able to proceed with the balance works due to constraints beyond his control. In such a case, the estimated value of the unexecuted portion of work as mutually agreed, shall however be reduced from the final contract value.

2.7.9 ***LIQUIDATED DAMAGES/PENALTY***

COMPENSATION FOR DELAY:

If the contractor fails to maintain the required progress in terms of condition 2.10 or to complete the work and clear the site on or before the contracted or extended the period of completion, he shall, without prejudice to any other right or remedy of the BHEL on account of such breach, pay as agreed compensation an amount calculated as stipulated below

For unfinished anticipated value of work where finished portion is fit for use

Rate of compensation as follows:

- *Completion period (as originally stipulated)not exceeding 6 months. ……@ 1 percent per week*
- *Completion period (as originally stipulated) Exceeding 6 months and not exceeding 2 years…@ 0.5 percent per week*
- *Completion period (as originally stipulated) exceeding 2 years…… @ 0.25 percent per week*

Provided always that the total amount of compensation for delay to be paid under condition shall not exceed the under noted percentage of the anticipated contract value

- *Completion period (as originally stipulated) not exceeding 6 months. ……@ 10 percent of anticipated value of work*
- *Completion period (as originally stipulated)Exceeding 6 months and not exceeding 2 years…@ 7.5 percent of anticipated value of work*
- *Completion period (as originally stipulated)Exceeding 2 years……..@ 5 percent of anticipated value of work*

The amount of compensation may be adjusted or set off against any sum payable to the Contractor under this or any other contract with the BHEL.

2.7.10 ***POST TECHNICAL AUDIT OF WORK AND BILLS****: BHEL reserve the right to carry out a post-payment audit and technical examination of the work and final bill including all supporting vouchers, abstract etc., and to enforce recovery of any sums becoming due as a result thereof in the manner provided in the proceeding sub-paragraph's provided however that no such recovery shall be enforced after three years of passing the final bill*

2.8 RESPONSIBILITIES OF THE CONTRACTOR IN RESPECT OF LOCAL LAWS, EMPLOYMENT OF WORKERS ETC.

The following are the responsibilities of the contractor in respect of observance of local laws, employment of personnel, payment of taxes etc. The subcontractor shall fully indemnify BHEL against any claims of whatsoever nature arising due to the failure of the contractor in discharging any of his responsibilities hereunder:

2.8.1 The contractor at all times during the continuance of this contract shall, in all his dealings with local labour for the time being employed on or in connection with the work, have due regard to all local festivals and religious and other customs.

2.8.2 The contractor shall comply with all applicable State and Central Laws, Statutory Rules, Maternity act, Regulations etc. such as contract labour(R&A) Act 1970, Minimum wage Act 19748, Payment of wages Act 1936,ESI Act 1948, EPF Act 1952, Employees' compensation Act 1923, Provision of Companies Act 1948 & rules thereof, The interstate Migrant Workmen 1979, The Karnataka Factories Rules 1969, Payment of Bonus Act 1965, Payment of Gratuity Act 1972. Child labour Prohibition act 1986, Karnataka Minimum Wage Act , Prevention of sexual harassment at work place Act 2013, Guidelines/notification related to Safai Karamchari Act , Equal Remuneration Act 1976, The company's instructions as issued from time to time in regard to working hours, wages, leaves, holidays etc. for labour as may be enacted by the Government during the tenure of the Contract and having force or jurisdiction at Site. The Contractor shall also give to the local Governing Body, Police and other relevant Authorities all such notices as may be required by the Law.

The contractor shall produce the following registers and forms:

- *Form XIII- Register of work men employed by contractor(Rule 75)*
- *Form XIV- Employment Card issued by contractor(Rule 76)*
- *Form XVI- Muster Roll (Rule 78(1) (a)(i))*
- *Form XVII- Register of Wages (Rule 78(1) (a)(i))*
- *Form XVIII- Register of wages cum Muster Roll(in case of weekly payment)*
- *Form XIX- Wage slip (Rule 78(b))*
- *Form XX- Register of deduction for damages Or Loss Rule 78(1) (a)(ii))*
- *Form XXI- Register of files Rule 78(1) (a)(ii))*
- *Form XXII- Register of Advance Rule 78(1) (a)(ii))*
- *Form XXIII- Register of Overtime Rule 78(1) (a)(iii))*
- *Form XXIV- Return to be sent by the contractor to the Licensing officer (Rule 82(1))*

2.8.3 The contractor shall obtain independent License under the Contract Labour (Regulations and Abolition Act)as required from the concerned Authorities based on the certificate (Form-V) issued by the Principal Employer/Customer

2.8.4 The contractor shall pay all taxes, fees, license charges, deposits, duties, tolls, royalties, commission or other charges which may be levied on account of his operations in executing the contract.

2.8.5 While BHEL would pay the inspection fees and Registration fees of Boiler & explosive/Electrical Inspectorate, all other arrangements for site visits periodically by the Inspectorate to site, Inspection certificate etc. will have to be made by contractor. However, BHEL will not make any payment to the Inspectorate in connection with contractor's Welders/Electricians qualification tests etc.

2.8.6 Contractor shall be responsible for provision of Health and Sanitary arrangements (more particularly described in Contract Labour Regulation & Abolition Act), Safety precautions etc. as may be required for safe and satisfactory execution of contract.

2.8.7 The contractor shall be responsible for proper accommodation including adequate medical facilities for personnel employed by him.

2.8.8 The contractor shall be responsible for the proper behavior and observance of all regulations by the staff employed by him.

2.8.9 The contractor shall ensure that no damage is caused to any person/property of other parties working at site. If any such damage is caused, it is responsibility of the contractor to make good the losses or compensate for the same.

2.8.10 All the properties/equipment/components of BHEL/their Client loaned with or without deposit to the contractor in connection with the contract shall remain properties of BHEL/their Client.

2.8.11 The contractor shall use such properties for the purpose of execution of this contract. All such properties/equipment/components shall be deemed to be in good condition when received by the contractor unless he notifies within 48 hours to the contrary. The contractor shall return them in good condition as and when required by BHEL/their Client. In case of non-return, loss, damage, repairs etc, the cost thereof as may be fixed by BHEL Engineer will be recovered from the contractor

2.8.12 Any delay in completion of works/or non-achievement of periodical targets due to the reasons attributable to the contractor, the same may have to be compensated by the contractor either by increasing manpower and resources or by working extra hours and/or by working more than one shift. All these are to be carried out by the contractor at no extra cost.

2.8.13 The contractor shall arrange, coordinate his work in such a manner as to cause no hindrance to other agencies working in the same premises.

2.8.14 All safety rules and codes applied by the Client/BHEL at site shall be observed by the contractor without exception. The contractor shall be responsible for the safety of the equipment/material and works to be performed by him and shall maintain all light, fencing guards, slings etc. or other protection necessary for the purpose. Contractor shall also take such additional precautions as may be indicated from time to time by the Engineer with a view to prevent pilferage, accidents, fire hazards. Due precautions shall be taken against fire hazards and atmospheric conditions. Suitable number of Clerical staff, watch and ward, store keepers to take care of equipment/materials and construction tools and tackles shall be posted at site by the contractor till the completion of work under this contract. The contractor shall arrange for such safety devices as are necessary for such type of work and carry out the requisite site tests of handling equipment, lifting tools, tackles etc. as per prescribed standards and practices. Contractor has to ensure the implementation of Health, Safety and Environment (HSE) requirements as per directions given by BHEL/Customer. The contractor has to assist in HSE audit by BHEL/Customer and submit compliance Report. The contractor has to generate and submit record/reports as per HSE plan/activities as per instruction of BHEL/Customer. All tools, plant and equipment brought to the site shall become the property of BHEL and shall not be removed from the site without the prior written approval from BHEL. When the work is finally completed or the Contractor is determined for reasons other than the defaults of the contract, he shall forthwith remove from the site all tools, plants, equipment etc., (other than those as may have been provided by BHEL) and upon such removal, the same shall revert in, and become the property of the contractor.

2.8.15 The contractor will be directly responsible for payment of wages to his workmen on specified date of respective month declared as per applicable Labour Act. A pay roll sheet giving all the payments given to the workers and duly signed by the contractor's representative should be furnished to BHEL site for record purpose.

2.8.16 In case of any class of work for which there is no such specification as laid down in the contract, such work shall be carried out in accordance with the instructions and requirements of the Engineer.

2.8.17 Also, no idle charges will be admissible in the event of any stoppage caused in the work resulting in contractor's labour and Tools & Plants being rendered idle due to any reason at any time.

2.8.18 The contractor shall take all reasonable care to protect the materials and work till such time the plant/equipment has been taken over by BHEL or their Client whichever is earlier.

2.8.19 The contractor shall not stop the work or abandon the site for whatsoever reason of dispute, excepting force majeure conditions. All such problems/disputes shall be separately discussed and settled without affecting the progress of work. Such stoppage or abandonment shall be treated as breach of contract and dealt with accordingly

2.8.20 The contractor shall keep the area of work clean and shall remove the debris etc. while executing day-to-day work. Upon completion of work, the contractor shall remove from the vicinity of work, all scrap, packing materials, rubbish, unused and other materials and deposit them in places specified by the Engineer. The contractor will also demolish all the hutments, sheds, offices, etc. constructed and used by him and shall clean the debris. In the event of his failure to do so, the same will be arranged to be done by the Engineer and the expenses recovered from the contractor. If the work is executed in Factory premises, no hutment will be allowed.

2.8.21 The contractor shall execute the work in the most substantial and workman like manner in the stipulated time. Accuracy of work and timely execution shall be the essence of this contract. The contractor shall be responsible to ensure that the quality, assembly and workmanship conform to the dimensions and clearance given in the drawings and/ or as per the instructions of the Engineer.

2.8.22 The Contractor to note that some of BHEL's T&Ps/MMDs may not be insured. The Contractor will take necessary precautions and due care to protect the same while in his custody from any damage/ loss till the same is handed over back to BHEL. In case the damage / loss is due to carelessness/ negligence on the part of the contractor, the Contractor is liable to get them repair/ replaced immediately and in case of his failure to do so within a reasonable time, BHEL will reserve the right to recover the loss from the contractor.

2.8.23 The contractor shall provide all watchmen necessary, for the protection of the site, the work, the materials, the tools , plant, equipment and anything else lying on the site during the progress of the work. He shall solely be responsible for and shall take all reasonable and proper steps for protecting, securing , lighting and watching all places on or about the work and the site which may be dangerous to any person whom so ever.

2.8.24 SITE DRAINAGE: All water that may accumulate on the site during the process of the work, or in trenches and excavations shall be removed to the entire satisfaction of the Engineer-in-charge and at Contractors expense.

2.8.25 INSPECTION OF THE WORK: BHEL Officers concerned with the Contract shall have power at any time to inspect and examine any part of the work and the contractor shall give such facilities as may be required to given for such inspection and examination.

2.8.26 In case the contractor is required to undertake any work outside the scope of this contract, the rates payable shall be those mutually agreed upon if the item rates are not mentioned in existing contract

i. For any item of wok required to be carried out after the contract has been awarded and which is not covered by Contractors Schedule but is covered by C.P.W.D. schedule of rates the rate payable for such a fresh item will be derived from updated C.P.W.D. schedule of rates by the method of proportion as follows:

ii. Rate as per estimated updated C.P.W.D DSR and loading tender excess (plus or minus) on pro–rata basis for nearest analogous items. For other items rate as per estimated C.P.W.D DSR and loading tender excess(plus or minus)

iii. If rates are not available in C.P.W.D. DSR, deviated item rates will be derived from market rate with 15% profit and overheads.

2.9 ***PROGRESS MONITORING, MONTHLY REVIEW AND PERFORMANCE EVALUATION***

2.9.1 A detailed plan/programme for completion of the contractual scope of work as per the time schedule given in the contract shall be jointly agreed between BHEL and Contractor, before commencement of work . The above programme shall be supported by month wise deployment of resources viz Manpower, T&P, Consumables, etc. Progress will be reviewed periodically (Daily/Weekly/Monthly) vis a vis this jointly agreed programme. The Contractor shall submit periodical progress reports (Daily/Weekly/Monthly) and other reports/information including manpower, consumables, T&P mobilization etc as desired by BHEL.

2.9.2 Monthly progress review between BHEL and Contractor shall be based on the agreed programme as above, availability of inputs/fronts etc, and constraints if any, as per prescribed formats. Manpower, T&P and consumable reports as per prescribed formats shall be submitted by contractor every month. Release of RA Bills shall be contingent upon certification by BHEL Site Engineer of the availability of the above prescribed formats duly filled in and signed.

2.9.3 The burden of proof that the causes leading to any shortfall is not due to any reasons attributable to the contractor is on the contractor himself. The monthly progress review shall record shortfalls attributable to (i) Contractor, (ii) Force Majeure Conditions, and (iii) BHEL

2.10 ***TIME OF COMPLETION***

2.10.1 Time is essence of the contract. The time schedule shall be as prescribed in the Contract. The time for completion shall be reckoned from the date of commencement of work at Site as certified by BHEL Engineers

2.10.2 The entire work shall be completed by the contractor within the time schedule or within such extended periods of time as may be allowed by BHEL under clause 2.11

2.11 ***EXTENSION OF TIME FOR COMPLETION***

2.11.1 If the completion of work as detailed in the scope of work gets delayed beyond the contract period, the contractor shall request for an extension of the contract and BHEL at its discretion may extend the Contract.

2.11.2 Based on the monthly reviews jointly signed, the works balance at the end of original contract period less the backlog attributable to the contractor shall be quantified, and the number of months of 'Time extension' required for completion of the same shall be jointly worked out. Within this period of 'Time extension', the contractor is bound to complete the portion of backlog attributable to the contractor. Any further 'Time extension' or 'Time extensions' at the end of the previous extension shall be worked out similarly.

2.11.3 However if any 'Time extension' is granted to the contractor to facilitate continuation of work and completion of contract, due to backlog attributable to the contractor alone, then it shall be without prejudice to the rights of BHEL to impose penalty/LD for the delays attributable to the contractor, in addition to any other actions BHEL may wish to take at the risk and cost of contractor.

2.11.4 A joint programme shall be drawn for the balance amount of work to be completed during the period of 'Time Extension', along with matching resources (with weightages) to be deployed by the contractor as per specified format. Review of the programme and record of shortfall shall be done every month of the 'Time extension' period in the same manner as is done for the regular contract period.

2.11.5 During the period of 'Time extension', contractor shall maintain their resources as per mutually agreed program

2.11.6 At the end of total work completion as certified by BHEL Engineer, and upon analysis of the total delay, the portion of time extensions attributable to (i) Contractor, (ii) Force majeure conditions, and (iii) BHEL, shall be worked out and shall be considered to be exhausted in the same order. The total period of time extensions shall be the sum of (i), (ii) and (iii) above and shall be equal to period between the scheduled date of completion and the actual date of completion of contract. LD shall be imposed/levied for the portion of time extensions attributable to contractor and recoverable from the dues payable to the contractor.

2.12 ***OVERRUN COMPENSATION (THIS CLAUSE IS NOT APPLICABLE IN BHEL FACTORY & TOWNSHIP PREMISES)***

2.12.1 Over Run Compensation (ORC) is payable by way of rate revisions for periods beyond original, contract period subject to the following terms and conditions.

2.12.2 Rates shall be increased by 10% for the first twelve months of one or more extensions beyond original contract period. For the next twelve months of further extensions if any, rates shall be increased as above by 10% over the previous twelve months, and similarly for each subsequent twelve months extension.

2.12.3 Should there be any 'Time extension' for reasons attributable only to the contractor, then the work shall be executed by the contractor at the rates applicable for the period the work was planned

2.12.4 Payment of ORC shall be regulated as follows:

i) Contractor is entitled to Over Run Compensation (ORC) only for the portion of backlog attributable to BHEL.

ii) 50% of the compensation is allocated for deployment of resources agreed as per the joint programme drawn vide 2.11.4. Payment shall however be based on the actual deployment of resources for the month as certified by BHEL, as per weightages assigned therein

iii) 50% of the compensation, is allocated for achieving of planned progress agreed as per the joint programme drawn vide 2.11.4. Payment shall be on pro rata basis for actual achieved quantities

iv) Total Over Run Compensation shall be limited to 10% of the executed contract value as certified in Final Bill. For this purpose executed contract value excludes PVC, ORC, Supplementary/Additional Items and Extra Works done on Man-day rate basis

2.12.5 Contractor shall not be entitled for any Over Run Compensation (ORC) for the portion of backlog attributable to the contractor. Such works shall be executed at the rates applicable for the period the work was planned

2.13 ***QUANTITY VARIATION***

2.13.1 The quoted rates shall remain firm irrespective of any variations in the individual quantities.

2.14 ***EXTRA WORKS***

2.14.1 All rectifications/modifications, revamping, and reworks required for any reasons not attributable to the contractor, or needed due to any change in deviation from drawings and design of equipment, operation/maintenance requirements, mismatching, or due to damages in transit, storage and erection/commissioning, and other allied works which are not very specifically indicated in the drawings, but are found essential for satisfactory completion of the work, will be considered as extra works.

2.14.2 Extra works arising on account of the contractor's fault, irrespective of time consumed in rectification of the damage/loss, will have to be carried out by the contractor free of cost. Under such circumstances, any material and consumable required for this purpose will also have to be arranged by the contractor at his cost.

2.14.3 All the extra work should be carried out by a separately identifiable gang, without affecting routine activities. Daily log sheets in the pro-forma prescribed by BHEL should be maintained and shall be signed by the contractor's representative and BHEL engineer. No claim for extra work will be considered/entertained in the absence of the said supporting documents i.e. daily log sheets. Signing of log sheets by BHEL engineer does not necessarily mean the acceptance of such works as extra works.

2.14.4 BHEL retains the right to award or not to award any of the major repair/ rework/modification/rectification/fabrication works to the contractor, at their discretion without assigning any reason for the same

2.14.5 After eligibility of extra works is established and finally accepted by BHEL engineer/designer, payment will be released on competent authority's approval at the following rate.

MAN-HOUR RATE FOR ELIGIBLE EXTRA WORKS: Single composite average labour man-hour rate, including overtime if any, supervision, use of tools and tackles and other site expenses and incidentals, consumables for carrying out any major rework/ repairs/ rectification/ modification/ fabrication as certified by site as may arise during the course of erection, testing, commissioning or extra works arising out of transit, storage and erection damages, payment , if found due will be as per applicable minimum wage act

2.14.6 The above composite labour man hour rate towards extra works shall remain firm and not subject to any variation during execution of the work. PVC will not be applicable for extra works. Rate revision, Over Run Charges/compensation etc will not be applicable due to extra works.

2.14.7 Extra Works for Civil Packages shall be regulated as follows

i) Rates for Extra Works arising due to (1) non availability of BOQ (Rate Schedule), OR (2) change in Specifications of materials/works (3) rectification/modification/dismantling & re erecting etc due to no fault of Contractor, shall be in the order of the following:

a) Item rates are to be derived from similar nature of items in the BOQ (Rate Schedule) with applicable escalation derived from All India Consumer Price Index for Whole Sale Commodities.

b) As per applicable updated CPWD-DSR (or latest edition) with applicable escalation derived, Notification issued by the office of CPWD for 'Cost Index' in that Region where the project is being executed,

c) Item rates are to be worked out on the basis of prevailing market rates mutually agreed between BHEL and Contractor, plus 15% towards Contractor's overheads and profit.

ii) PVC and ORC will not applicable be for (i) above.

2.15 ***SUPPLEMENTARY ITEMS***

2.15.1 For NON Civil Works

Supplementary items are items/works required for completion of entire work but not specified in the scope of work. Subject to certification of such items/works as supplementary items by BHEL Engineer, rates shall be derived on the basis of any one of the following on mutual agreement:

i) Based on percentage breakup/rates indicated for similar/nearby items

ii) In case (i) above does not exist, then BHEL/site may derive the percentage breakup/rates to suit the type of work

2.15.2 For Civil Works

i) Rates for Supplementary Works/Additional Works arising out due to additions/alterations in the original scope of works as per contract subject to certification of BHEL Engineer shall be worked out as under:

a) Item rates which are available in existing BOQ (Rate Schedule) shall be operated with applicable escalation derived from All India Consumer Price Index for Whole Sale Commodities

b) Items of works which are not available in existing BOQ shall be operated as an 'Extra Works' and rate shall be derived as per clause no 2.14

ii) Execution of Supplementary Works/Additional Works through the Contractor shall be at the sole discretion of BHEL, and shall be considered as part of executed contract value for the purpose of Quantity Variation as per clause 2.13

iii) BHEL Engineer's decision regarding fixing the rate as above is final and binding on the contractor.

iv) PVC and ORC will not be applicable for (i) above.

2.16 ***STRIKES & LOCKOUT***

2.16.1 The contractor will be fully responsible for all disputes and other issues connected with his labour/employee. In the event of the contractor's labour/employee resorting to strike or the Contractor resorting to lockout and if the strike or lockout declared is not settled within a period of 15 days, BHEL shall have the right to get the work executed through any other

agencies and the cost so incurred by BHEL along with Overhead charges of 35% shall be deducted from the Contractor's bills along with overhead of 35%

2.16.2 For all purposes whatsoever, the employees of the contractor shall not be deemed to be in the employment of BHEL

2.17 FORCE MAJEURE

The following shall amount to Force Majeure:-

2.17.1 Acts of God, act of any Government, War, Sabotage, Riots, Strike, Civil commotion, Police action, Revolution, Flood, Fire, Cyclones, Earth quake and Epidemic and other similar causes over which the contractor has no control.

2.17.2 If the contractor suffers delay in the due execution of the contractual obligation due to delays caused by force majeure as defined above, the agreed time of completion of the job covered by this contract or the obligations of the contractor shall be extended by a period of time equal to period of delay, provided that on the occurrence of any such contingency, the contractor immediately reports to BHEL in writing the causes of delay and the contractor shall not be eligible for any compensation.

2.18 ***ARBITRATION & RECONCILIATION***

2.18.1 In case amicable settlement is not reached in the event of any dispute or difference arising out of the execution of the Contract or the respective rights and liabilities of the parties or in relation to interpretation of any provision by the Contractor in any manner touching upon the Contract, such dispute or difference shall (except as to any matters, the decision of which is specifically provided for therein) be referred to the sole arbitration of the arbitrator appointed by BHEL/In charge.

The award of the Arbitrator shall be binding upon the parties to the dispute Subject as aforesaid, the provisions of Arbitration and Reconciliation Act 1996 (India) or statutory modifications or reenactments thereof and the rules made there under and for the time being in force shall apply to the arbitration proceedings under this clause. The venue of the arbitration shall be the place from which the contract is issued or such other place as the Arbitrator at his discretion may determine

2.18.2 In case of Contract with Public Sector Enterprise (PSE) or a Government Department, the following shall be applicable:

In the event of any dispute or difference relating to the interpretation and application of the provisions of the Contract, such dispute or difference shall be referred to by either party to the arbitration of one of the arbitrators in the department of public enterprises. The award of the arbitrator shall be binding upon the parties to the dispute, provided, however, any party aggrieved by such award may make further reference for setting aside or revision of the award to the Law Secretary, Department of Legal Affairs, Ministry of Law and Justice, Government of India. Upon such reference the dispute shall be decided by the Law Secretary or the Special Secretary or Additional Secretary when so authorized by the Law Secretary, whose decision shall bind the parties hereto finally and conclusively.

2.18.3 The cost of arbitration shall be borne equally by the parties.

2.18.4 Work under the contract shall be continued during the arbitration proceedings

2.19 ***PAYMENTS***

Payments to Contractors are made in any one of the following forms

2.19.1 Running Account Bills (RA Bills)

i) These are for interim payments when the contracts are in progress. The bills for such interim payments are to be prepared by Contractor in prescribed formats (RA Bill forms).

ii) Payments shall be made according to the extent of work done as per measurements taken up to the end of the calendar month and in line with the terms of payments described in the Tender documents along with relevant statutory documents applicable for the work.

iii) Recoveries on account of electricity, water, statutory deductions, etc are made as per terms of contract

iv) Full rates for the work done shall be allowed only if the quantum of work has been done as per the specifications stipulated in the contract. If the work is not executed as per the stipulated specifications, BHEL may ask the contractor to re do the work according to the required specifications, without any extra cost. However, where this is not considered necessary 'OR' where the part work is done due to factors like non-availability of material to be supplied by BHEL 'OR' non availability of fronts 'OR' non availability of drawings, fraction payment against full rate, as is considered reasonable, may be allowed with due regard for the work remaining to be done. BHEL decision in this regard will be final and binding on the contractor.

v) In order to facilitate part payment, BHEL Site Engineer at his discretion may further split the contracted rates/percentages to suit site conditions, cash flow requirements according to the progress of work

2.19.2 Final Bill

Final Bill' is used for final payment on closing of Running Account for works or for single payment after completion of works. 'Final Bill' shall be submitted as per prescribed format after completion of works as per scope and upon material reconciliation, along with the following.

i) 'No Claim Certificate' by contractor

ii) Clearance certificates where ever applicable viz Clearance Certificates from Customer, various Statutory Authorities like Labour department, PF Authorities, Commercial Tax Department, etc

iii) Indemnity bond as per prescribed format BHEL shall settle the final bills after deducting all liabilities of Contractor to BHEL

2.20 ***PERFORMANCE GUARANTEE FOR WORKMANSHIP***

2.20.1 Even though the work will be carried out under the supervision of BHEL Engineers the Contractor will be responsible for the quality of the workmanship and shall guarantee the work done for a period of as mentioned in the contract/NIT from the date of commencement of guarantee period as defined in Technical Conditions of Contract, for good workmanship and shall rectify free of cost all defects due to faulty erection detected during the guarantee period. In the event of the Contractor failing to repair the defective works within the time specified by the Engineer, BHEL may proceed to undertake the repairs of such defective works at the Contractor's risk and cost, without prejudice to any other rights and recover the same from the balance security deposit.

2.20.2 BHEL shall release the balance security deposit subject to the following

i) Contractor has submitted 'Final Bill'

ii) Guarantee period as per contract has expired

iii) Contractor has furnished 'No Claim Certificate' in specified format

iv) BHEL Site Engineer/Construction Manager has furnished the 'No Demand Certificate' in specified format

v) Contractor has carried out the works required to be carried out by him during the period of Guarantee and all expenses incurred by BHEL on carrying out such works is included for adjustment from the Guarantee money refundable.

2.21 ***CLOSING OF CONTRACTS***

The Contract shall be considered completed and closed upon completion of all contractual obligations and settlement of Final Bill or completion of Guarantee period whichever is later. Upon closing of Contract, BHEL shall issue a completion certificate as per standard format, based on specific request of Contractor.

2.22 ***REVERSE AUCTION/PRICE BID OPENING:***

- *BHEL reserves the right to go for reverse auction at any point of time before opening of Price Bid.*
- *Bids with non-acceptance of reverse auction will be liable for rejection.*
- *Opening of Price Bid at discretion of BHEL.*
- *BHEL shall be at liberty to cancel the tender at any time, before ordering, without assigning any reason.*

2.23 ***SUSPENSION OF BUSINESS DEALINGS***

BHEL reserves the right to take action against Contractors who either fail to perform or Tenderers/Contractor who indulge in malpractices, by suspending business dealings with them in line with BHEL guidelines issued from time to time.

2.24 OTHER ISSUES

2.24.1 Value of Non judicial Stamp Paper for Bank Guarantees and for Contract Agreement shall be not less than Rs 200/- unless otherwise required under relevant statutes.

2.24.2 In case of any conflict between the General Conditions of Contract and Special Conditions of Contract, provisions contained in the Special Conditions of Contract shall prevail.

2.24.3 Unless otherwise specified in NIT, offers from consortium/JVs shall not be considered.

2.24.4 BHEL may not insist for signing of Contract Agreements in respect of low value and short time period contracts

ANNEXURE A

PROFORMA OF BANK GUARANTEE FOR EARNEST MONEY

(On non-Judicial paper of appropriate value)

Bank Guarantee No…….

Date…….

To

(Employer's Name and Address)

……..

Dear Sirs,

In accordance with the terms and conditions of Invitation for Bids/Notice Inviting Tender No……1(Tender Conditions), M/s. …….. having its registered office at ……2 (hereinafter referred to as the 'Tenderer'), is submitting its bid for the work of**……..3** invited by ……4.(name of the Employer) through its Unit at ……(

The Tender Conditions provide that the Tenderer shall pay a sum of Rs ……. as Earnest Money Deposit in the form therein mentioned. The form of payment of Earnest Money Deposit includes Bank Guarantee executed by a Scheduled Bank.

In lieu of the stipulations contained in the aforesaid Tender Conditions that an irrevocable and unconditional Bank Guarantee against Earnest Money Deposit for an amount of .....5 ..... is required to be submitted by the Tenderer as a condition precedent for participation in the said Tender and the Tenderer having approached us for giving the said Guarantee,

we, the .....[Name & address of the Bank] ..... having our Registered Office at ……..(hereinafter referred to as the Bank) being the Guarantor under this Guarantee, hereby irrevocably and unconditionally undertake to forthwith and immediately pay to the Employer without any demur, merely on your first demand any sum or sums of Rs. 5 .....(in words Rupees.....) without any reservation, protest, and recourse and without the beneficiary needing to prove or demonstrate reasons for its such demand.

Any such demand made on the Bank shall be conclusive as regards the amount due and payable by the Bank under this guarantee. However, our liability under this guarantee shall be restricted to an amount not exceeding Rs. _____ _____.

We undertake to pay to the Employer any money so demanded notwithstanding any dispute or disputes raised by the Vendor/Contractor/Vendors in any suit or proceeding pending before any Court or Tribunal, Arbitrator or any other authority, our liability under this present being absolute and unequivocal.

The payment so made by us under this Guarantee shall be a valid discharge of our liability for payment hereunder and the Tenderer shall have no claim against us for making such payment.

We …….. Bank further agree that the Employer shall have the fullest liberty without our consent and without affecting in any manner our obligations hereunder to vary any of the terms and conditions of the said Tender or to extend the time of submission of from time to time or to postpone for any time or from time to time any of the powers exercisable by the Employer against the said Tenderer and we shall not be relieved from our liability by reason of any such variation, or extension being granted to the said Tenderer or for any forbearance, act or omission on the part of the Employer or any indulgence by the Employer to the said Tenderer or by any such matter or thing whatsoever which under the law relating to sureties would but for this provision have effect of so relieving us.

The Bank also agrees that the Employer at its option shall be entitled to enforce this Guarantee against the Bank as a principal debtor, in the first instance without proceeding against the Tenderer and notwithstanding any security or other guarantee that the Employer may have in relation to the Tenderer's liabilities.

This Guarantee shall be irrevocable and shall remain in force upto and including……..6 and shall be extended from time to time for such period as may be desired by the Employer.

This Guarantee shall not be determined or affected by liquidation or winding up, dissolution or change of constitution or insolvency of the Tenderer but shall in all respects and for all purposes be binding and operative until payment of all money payable to the Employer in terms hereof. However, unless a demand or claim under this Guarantee is made on us in writing on or before the …… [7] we shall be discharged from all liabilities under this Guarantee.

We, …… Bank lastly undertake not to revoke this guarantee during its currency except with the previous consent of the Employer in writing.

Notwithstanding anything to the contrary contained hereinabove:

a) The liability of the Bank under this Guarantee shall not exceed……5…..
b) This Guarantee shall be valid up to ……6
c) Unless the Bank is served a written claim or demand on or before _____7 all rights under this guarantee shall be forfeited and the Bank shall be relieved and discharged from all liabilities under this guarantee irrespective of whether or not the original bank guarantee is returned to the Bank

We, _____ Bank, have power to issue this Guarantee under law and the undersigned as a duly authorized person has full powers to sign this Guarantee on behalf of the Bank.

For and on behalf of

(Name of the Bank)

Date…….

Place of Issue……..

Price-Bid

SCHEDULE OF WORKS FOR OPERATION AND MAINTENANCE OF NTPC KADIRI 50MWp SOLAR PV PLANT FOR 11 Months

Sl No	Activity description	Scope of Work & Remarks	Unit	Qty	Total Cost (% weightage of Total Value)
1	O&M Contractor has to take charge of Site in As-is-Where-is condition and to repair/replace the faulty euipment as mentioned on ONE TIME Basis. Further O&M of these equipment will be under regular O&M Scope. Bidder is advised to visit the site to ascertain the extent of repairs / replacement and scope of this work.	1. Fire Alarm System is not working. Needs repair/replacement. 2. Printer machine in SCADA room is not working. Needs repair. 3. CMCS water tank replacement and 1 booster pump repair.	Set (One time initial)	1	4.84%
2	Deployment of O&M Staff-O&M Incharge (1NO)	"Minimum One technical-cum-administrative in-charge having graduation in electrical / electronics engineering and experience in electrical plants with overall responsibility for complete plant operations. The in-charge shall have competence to handle technical and operational / crisis problems. " Major responsibilities of O&M incharge : (i) Allotment of work to all the O&M staff and supervision of O&M works as per schedule approved by BHEL. (ii) Sending Daily, weekly and Monthly reports (i.e. Daily values of solar array strings, weather parameters, Daily energy generation, Events (with date, time) of faults / tripping / breakdown of equipment, Events (with date, time) of grid outage, Events (with date, time) of equipment damages, Activities of module cleaning etc) (iii) Interaction with customer NTPC / HESCOM etc. (iv) Coordinating with sub-station upon grid failures /cable faults and implementing the needful steps to restore the plant to normal operation. Requesting for Line clearances and closing the same after fault is rectified. (v) Monthly downloading of data from ABT meter using HESCOM / as instructed by NTPC. Energy generation / meter reading report to be prepared and submitted to the concerned department. Signatures from NTPC representatives shall be obtained wherever required. (vi) Maintaining plant records and log books, stock register and reporting to BHEL. (vii) Trouble-shooting and Updation of SCADA system if required as instructed by BHEL. (viii) Theft incidents: immediate reporting to BHEL, filing FIRs at police stations on BHEL behalf, coordination for site inspection by insurance companies and clearance of insurance claims, logging of events (date, time) and maintaining records. (iX) Accidents: immediate reporting to BHEL, coordinating with hospitals, logging of events (data, time) and maintaining records. Maintaining O&M Log book and recording daily evenys and works. Payment for Services of O&M in Charge shall be as per attendance records maintained and deductions will be passed in case of non-availability.	Monthly	11	4.22%

SCHEDULE OF WORKS FOR OPERATION AND MAINTENANCE OF NTPC KADIRI 50MWp SOLAR PV PLANT FOR 11 Months

Sl No	Activity description	Scope of Work & Remarks	Unit	Qty	Total Cost (% weightage of Total Value)
3	Deployment of O&M Staff: Engineers having graduation/Diploma in electrical /electronics engineering (2 nos.) and O&M Technicians (6 nos.)	"Minimum Six working level O&M Technicians staff (Two in morning 6am shift and 4 in General shift 10am) with ITI / diploma level qualifications in engineering with competence for operating electrical / electronics / mechanical equipment, taking measurements, data logging / maintaining registers, preparation of reports in computer." Note: At least one among the technical personnel shall essentially be a certified / licensed person for HT operations (33KV minimum). This is a mandatory requirement. Technicians(Skilled and Highly skilled) shall perform Plant Operation works such as (i) Logging of DC, AC, grid parameters (current, voltage, power, energy) at PCUs, HT panels, 33KV switchyard, transformer temperatures, equipment tripping/ breakdown, grid outage as per BHEL formats. (ii) SCADA data station / HMI PC operations, trend graphs and urgent reporting to BHEL in case of any problems / anomalies observed with any of the parameters, resolving communication issues between SCADA and other equipment, healthiness of all equipment " Carrying out Preventive and Breakdown maintenance shall be carried out as per O&M schedule / OEM guidelines / maintenance manual such as a) Cleaning, tightness checks, lubrication and other maintenance of equipment -PCUs, HT panels, 33KV Power transformers, Inverter transformers, C&R panels, Auxiliary transformers, ACDB, FCBC, UPS, Battery banks, 33 KV Switchyard equipment, SMBs, SCADA, WMS, CCTV, Fire Alarm, ESE Lightning arresters, earthing, light fitting -indoor and outdoor etc. b) Replacement of Silica gel, gaskets, Rectification of Oil leakages in all transformers and 33KV Switchyard equipment. c) Repair/ replacement of failed 33KV cable inside plant, replacement of failed 33 kV termination/ jointing kits. d) Trouble-shooting of solar array problems as DC earth fault, OFC/ communication cable faults, replacement of damaged PV modules, SMB components etc. e) Checking tightness of MMS and PV Modules (f) Monthly earth resistance measurement and recording value on the Earth chambers and in O&M Log book. (g) Watering of earth pits (h) Inspection of fire extinguishers (weight, pressure indication, physical status etc.) followed by refilling actions, if necessary, based on indications. Report to be submitted as per BHEL approved recording formats. Measurement of Services of Technicians shall be as per attendance records maintained and deductions will be passed in case of non-availability at site.	Monthly	11	30.03%
4	Deployment of O&M Staff-O&M UNSKILLED (13NO)	Minimum Six unskilled persons for regular house-keeping (cleaning / mopping etc) and water cleaning of SPV modules (all working in General Shift from 10am) A) Water cleaning of solar modules of approximately 166240 nos. **(TWO cycles per month, each cycle shall consist of cleaning of entire 166240 Nos modules)**. B)Grass cutting - maintenance of plant without grass (One cycle per quarterly). Minimum 4 grass cutting machines to be used for grass cutting. Grass cutting machines and its Petrol cost is under vendor scope. C) General maintenance works such as Daily housekeeping activity for Inverter rooms and Control room including toilets, Garbage removal from solar array field, switchyard, roads, drains, pathways, sand buckets, repair of plumbing works, underground water tanks, Sintex tanks, cleaning of sewerage lines, septic tanks, soak pits if required, minor civil repair works such as leakages, doors, windows, rolling shutters, ventilators, floor/ tiles/ wall cracks, cleanning of drains etc. Each of the Unskilled workers shall be eligible for one day off in a week. A reliever shall also be deploted to take care of this requirement such that Minimum numbers of unskilled labour is maintained every day. O&M Contractor shall disburse payment to these labour in line with Minimum wages Act of Andhra Pradesh state and mainatin and submit records. D) Drinking water to be arranged for O&M personnel at site. Measurement of Services of Unskilled labour shall be as per attendance records maintained and deductions will be passed in O&M Contractor Bills in case of non-availability at site.	Monthly	11	33.14%

SCHEDULE OF WORKS FOR OPERATION AND MAINTENANCE OF NTPC KADIRI 50MWp SOLAR PV PLANT FOR 11 Months

Sl No	Activity description	Scope of Work & Remarks	Unit	Qty	Total Cost (% weightage of Total Value)
5	Checking and re-filling of Fire extinguishers and sand buckets as required.	All the fire extinguishers to be checked for healthiness and re-filling to be carried out as and when required. Inspection of fire extinguishers (weight, pressure indication, physical status etc) followed by refilling actions, if necessary, based on indications. Report to be submitted as per BHEL approved recording formats.	Monthly	11	5.71%
6	Seasonal tilting of SPV modules	Seasonal tilting of SPV modules as per seasonal tilting chart. All PV Modules installed shall be checked for tightness of bolts, For damages / hot spots on any module. Checking tightness of power cable terminations in SPV modules (MC4), SMBs, electrical panels of control room and switchyard.	Half Yearly	2	12.90%
7	Annual maintenance activities	Annual maintenance of all transformers with respect to BDV measurement, Oil filtering as required, tightness of cables, earthing and hardwares, replacement of gasket, silica gel breather, paint touchup, arresting oil leakages and oil topup of all transformers (33KV and aux transformers), CT, PT, lubrication of moving contacts (VCBs) and other related electrical works. Through OEM / competent testing agencies as approved by BHEL. All required tools, tackles, testing and measuring instruments, Oil filtration kit, DG set etc. to be arranged by vendor. The Annual Maintenance activities shall be carried out between November to January and will be measured only when all activities listed above are completed. Payment for any Maintenance not carried out shall be deducted from O&M Contractor Bills.	Yearly	1	5.19%
8	Calibration of Weather Monitoring Station equipment	Weather monitoring station equipment to be calibrated at IMD or OEM recommended labs as per calibration period of individual equipment as recommended by OEM.	Yearly	1	0.78%
9	Painting of all metal structures (non-galvanized), main gate, rolling shutters, switchyard and transformer yards fencing and gates, earthing chambers and all rusted components etc.	Painting of all metal structures shall be carried out once in every year.	Yearly	1	0.78%

SCHEDULE OF WORKS FOR OPERATION AND MAINTENANCE OF NTPC KADIRI 50MWp SOLAR PV PLANT FOR 11 Months

Sl No	Activity description	Scope of Work & Remarks	Unit	Qty	Total Cost (% weightage of Total Value)
10	Internet Charges	Internet lease line of 2 MBPS for remote connectivity of SCADA to be arranged at site round the clock (Including payment of unpaid dues)	Yearly	1	1.37%
11	Maintenance of Roads and drains	Maintenance of Roads and drains such as: I. Crack repairing of the road surface. II. Pot-holes over the top road surface to be rectify. III. Maintenance of shoulders for the rain cuts or damage due to some external reasons. IV. Before and after the monsoon season the storm water drainage shall be maintained & cleaned for smoother flow of storm water.	Yearly	1	1.04%
Total amount excluding GST (Rs.)					**6,441,527**
Total amount: Rupees Sixty-Four Lakhs Forty-One Thousand Five Hundred and Twenty-Seven, Plus applicable GST					
QUOTE PERCENTAGE (%) ABOVE/BELOW (+/-) (OR) AT PAR WITH RESPECT TO TOTAL AMOUNT					
QUOTED PERCENTAGE (%) IN WORDS ABOVE/BELOW (OR) AT PAR WITH RESPECT TO TOTAL AMOUNT					
Plus Applicable GST					

NOTE: 1. CONTRACTOR SHOULD QUOTE PERCENTAGE (%) ABOVE/BELOW (OR) AT PAR WITH RESPECT TO TOTAL AMOUNT.
2. QUOTED PERCENTAGE (%) IS APPLICABLE ON ALL ITEM RATES UNIFORMLY.
3. Measurement of Services / Activities carried out at Site shall be as per O&M Log book records and deductions will be passed in case of services / activities not completed in the month / year.

IMPORTANT NOTE:
Monthly/Annual O&M payment to the contractor will be released on comparision of generation as per guaranteed paramenter vis-a-vis Actual generation. The shortfall (if any) w.r.t guaranteed generation shall be duly supported by documentary evidence. Incase of shortfall w.r.t guaranteed generation paramenter, BHEL Engineering department to certifiy that "the reasons submitted by contractor are beyond its reasonable control". The amount equivalent to shortfall in generation may be observed by BHEL on exceptional basis.

*Manpower indicated is only minimum requirement. However, vendor to deploy required manpower to complete each activity in specified time duration.

The value of the Contract will remain same throughout contract period and no escalation is allowed. Hence bidder has to quote the price, considering the revision of minimum wages by Government notifications from time to time.