Annexure -1

List of Items and Drawings

One set consists of

Mark No	Item Description	Grade	Length mm	Nos	Galvanization
BR1	40LU40X3	FY350	2178	100	85μ
BR4	40LU40X3	FY350	2178	100	
BR7	40LU40X3	FY350	2175	229	
BR2	40LU40X2	FY350	2056	875	
BR5	40LU40X2	FY350	2056	1000	
BR8	40LU40X2	FY350	2053	800	
BR3A	40LU40X3	FY350	3405	8	
BR3B	40LU40X3	FY350	3343	8	
BR6A	45LU45X3	FY350	3504	8	
BR6B	45LU45X3	FY350	3285	8	
BR9A	50LU50X3	FY350	3620	8	
BR9B	50LU50X3	FY350	3220	9	

DRAWING NO:

ALL DIMENSIONS ARE IN MILLIMETERS

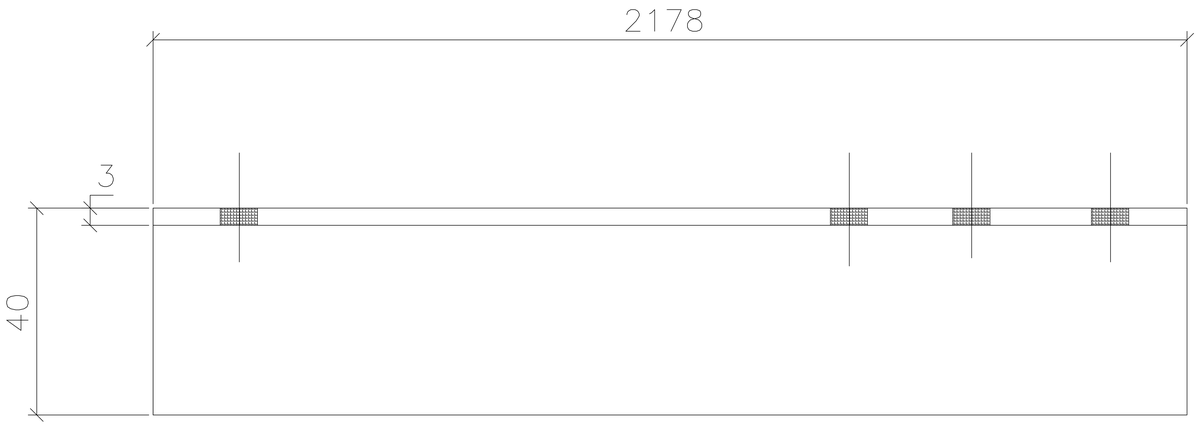

TOP VIEW

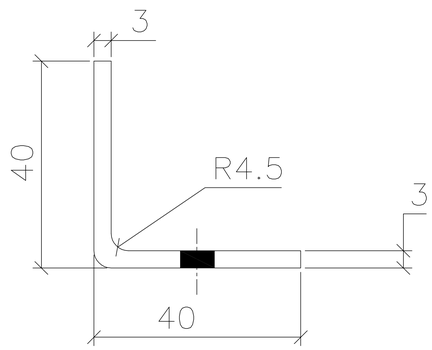

SIDE VIEW

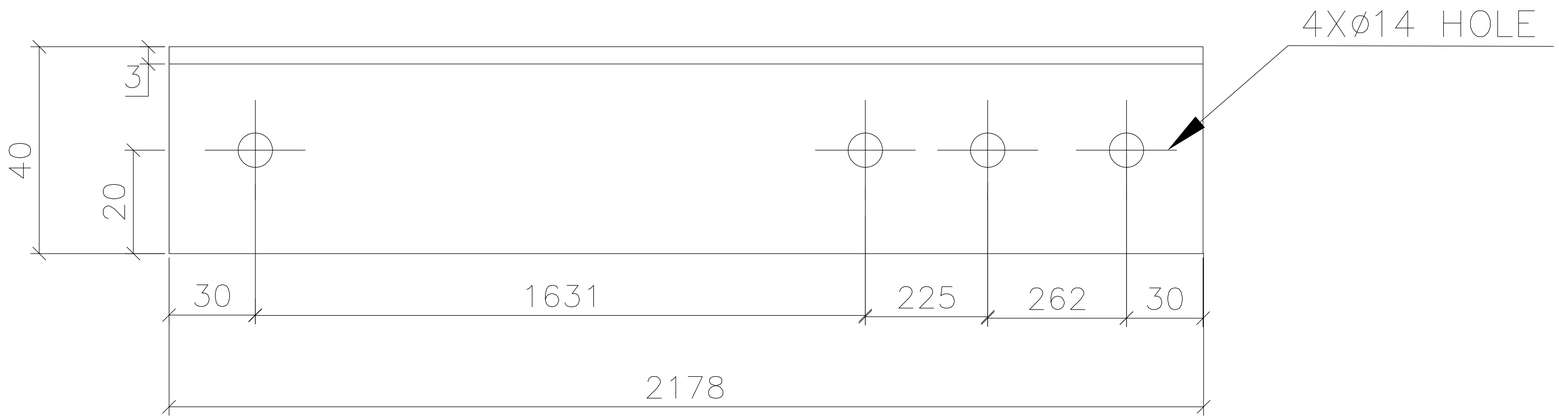

FRONT VIEW

GENERAL NOTES

1. ALL DIMENSIONS ARE IN MILLIMETERS UNLESS OTHERWISE SPECIFIED.
2. HOLE SIZES ARE SHOWN AFTER GALVANIZATION.
3. REMOVE ALL BURRS AND SHARP EDGES.
4. MMS 1 IS FOR FLAT TO 3 DEGREES TERRAIN

REFERENCE DRAWING:
5714-004-P4-PVC-Y-079 GENERAL ARRANGEMENT OF MODULE MOUNTING STRUCTURE

VARIANT NUMBER	ITEM NUMBER	DESCRIPTION	STD	DRAWING NUMBER	ITEM NO / VAR NO	MATERIAL CODE / MATERIAL SPECN	A/C	UNIT / D1	UNIT WEIGHT / QUANTITY	GS	ZONE
	01	BRACING BR-1							As per BOM		
		40X40X3-2178				FY 350			As per BOM		

50MWp SOLAR POWER PLANT (P4 BLOCK)

NTPC - MANDSAUR, MP

BHARAT HEAVY ELECTRICALS LIMITED.
PE&SD DIVISION, HYDERABAD

	NAME	SIGN.	DATE
DRN	SYAMAL		08.07.2016
CKD	VENU		08.07.2016
APPD	ESHAN		08.07.2016

No.OF VAR

DEPT.	SCALE	WEIGHT(Kg)	REF. TO ASSY. DRG.	ITEM NO.	No.OF ITEM
PE&SD	NTS	--			

CODE

TITLE
MODULE MOUNTING STRUCTURE
MMS 1: BRACING BR-1

BHEL DWG NO: PY-DH-3-M086-1260-01
NTPC DWG NO: 5714-004-P4-PVC-Y-080
REV. 02

SHEET NO. 06 NO. OF SHEETS 30

A2

DRAWING NO:

ALL DIMENSIONS ARE IN MILLIMETERS

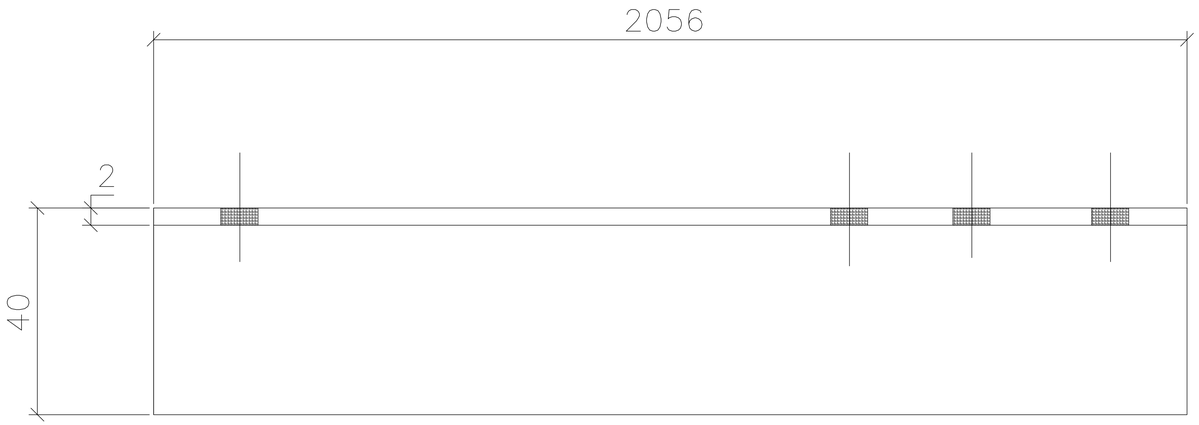

TOP VIEW

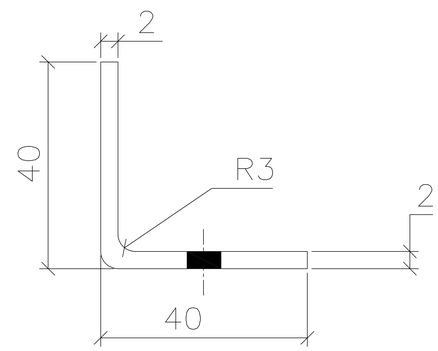

SIDE VIEW

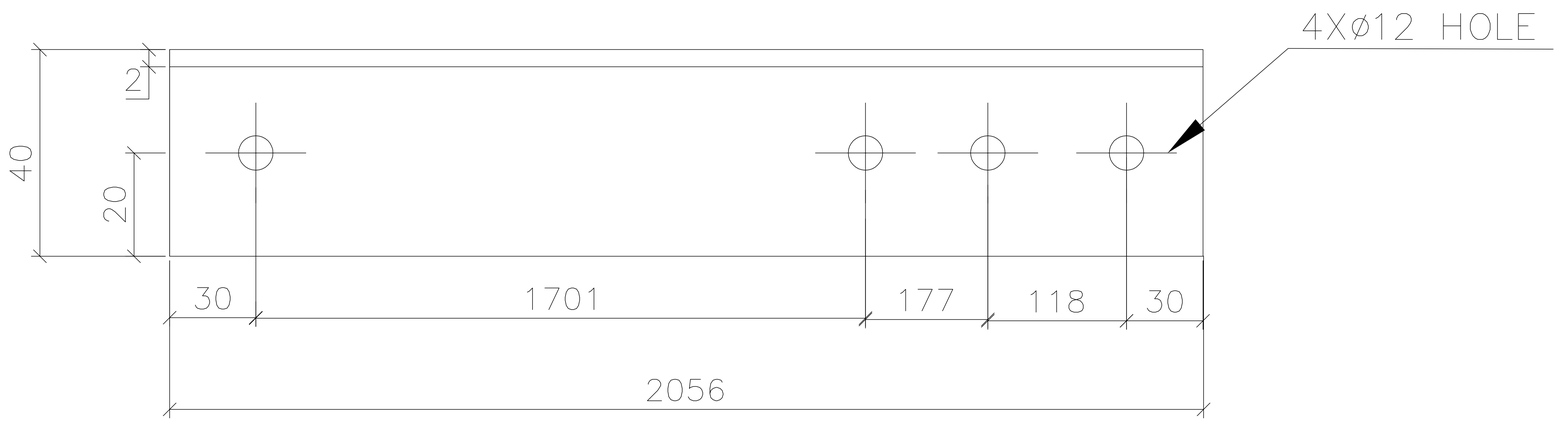

FRONT VIEW

GENERAL NOTES

1. ALL DIMENSIONS ARE IN MILLIMETERS UNLESS OTHERWISE SPECIFIED.
2. HOLE SIZES ARE SHOWN AFTER GALVANIZATION.
3. REMOVE ALL BURRS AND SHARP EDGES.
4. MMS 1 IS FOR FLAT TO 3 DEGREES TERRAIN

REFERENCE DRAWING:
5714-004-P4-PVC-Y-079 GENERAL ARRANGEMENT OF MODULE MOUNTING STRUCTURE

VARIANT NUMBER	ITEM NUMBER	DESCRIPTION	STD	DRAWING NUMBER	ITEM NO / VAR NO	MATERIAL CODE / MATERIAL SPECN	A/C	UNIT / D1	UNIT WEIGHT / QUANTITY	GS	ZONE
	01	BRACING BR-2							As per BOM		
		40X40X2-2056				FY 350			As per BOM		

50MWp SOLAR POWER PLANT (P4 BLOCK)

NTPC - MANDSAUR, MP

BHARAT HEAVY ELECTRICALS LIMITED.
PE&SD DIVISION, HYDERABAD

	NAME	SIGN.	DATE	No.OF VAR
DRN	SYAMAL		08.07.2016	
CKD	VENU		08.07.2016	
APPD	ESHAN		08.07.2016	

DEPT.	SCALE	WEIGHT(Kg)	REF. TO ASSY. DRG.	ITEM NO.	No.OF ITEM
PE&SD	NTS	--			

CODE

TITLE
MODULE MOUNTING STRUCTURE
MMS 1: BRACING BR-2

BHEL DWG NO: PY-DH-3-M086-1260-01
NTPC DWG NO: 5714-004-P4-PVC-Y-080
REV. 02
SHEET NO. 07
NO. OF SHEETS 30

A2

DRAWING NO:

ALL DIMENSIONS ARE IN MILLIMETERS

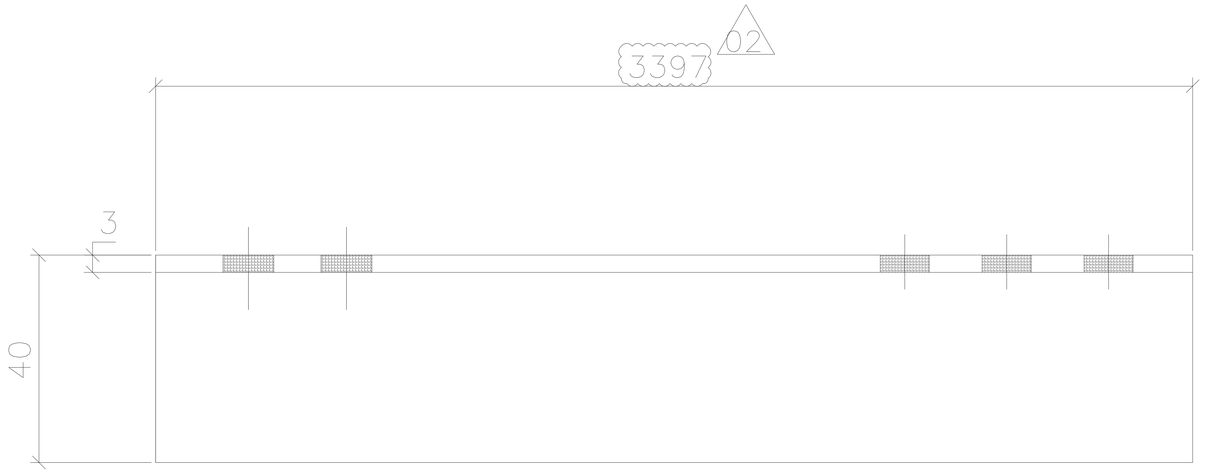

TOP VIEW

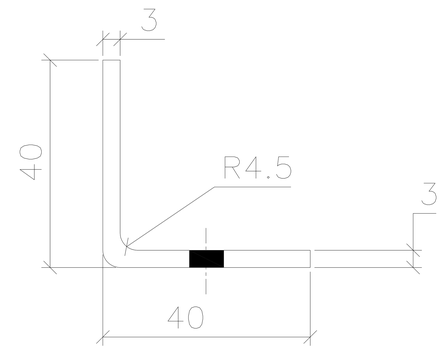

SIDE VIEW

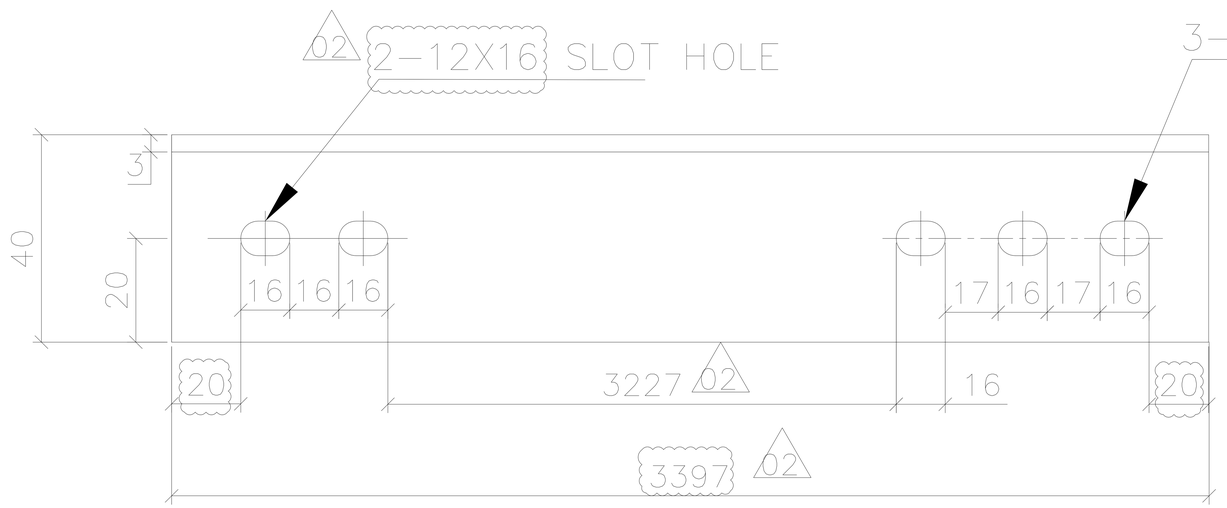

FRONT VIEW

GENERAL NOTES

1. ALL DIMENSIONS ARE IN MILLIMETERS UNLESS OTHERWISE SPECIFIED.
2. HOLE SIZES ARE SHOWN AFTER GALVANIZATION.
3. REMOVE ALL BURRS AND SHARP EDGES.
4. MMS 1 IS FOR FLAT TO 3 DEGREES TERRAIN

REFERENCE DRAWING:
5714-004-P4-PVC-Y-079 GENERAL ARRANGEMENT OF MODULE MOUNTING STRUCTURE

VARIANT NUMBER	ITEM NUMBER	DESCRIPTION	STD	DRAWING NUMBER	ITEM NO / VAR NO	MATERIAL CODE / MATERIAL SPECN	A/C	UNIT / D1	UNIT WEIGHT / QUANTITY	GS	ZONE
	01	BRACING BR-3A 40X40X3-3397				FY 350			As per BOM / As per BOM		

50MWp SOLAR POWER PLANT (P4 BLOCK)

NTPC - MANDSAUR, MP

BHARAT HEAVY ELECTRICALS LIMITED.
PE&SD DIVISION, HYDERABAD

	NAME	SIGN.	DATE	No.OF VAR
DRN	SYAMAL		08.07.2016	
CKD	VENU		08.07.2016	
APPD	ESHAN		08.07.2016	

DEPT.	SCALE	WEIGHT(Kg)	REF. TO ASSY. DRG.	ITEM NO.	No.OF ITEM
PE&SD	NTS	--			

CODE

TITLE
MODULE MOUNTING STRUCTURE
MMS 1: BRACING BR-3A

BHEL DWG NO: PY-DH-3-M086-1260-01
NTPC DWG NO: 5714-004-P4-PVC-Y-080
REV. 02
SHEET NO. 08
NO. OF SHEETS 30

A2

DRAWING NO:

ALL DIMENSIONS ARE IN MILLIMETERS

TOP VIEW

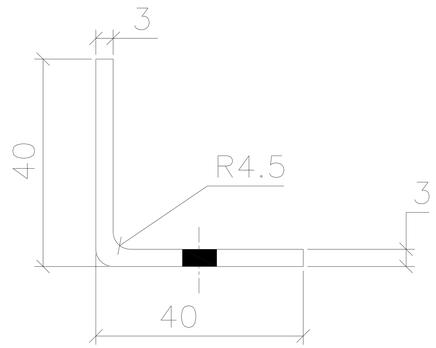

SIDE VIEW

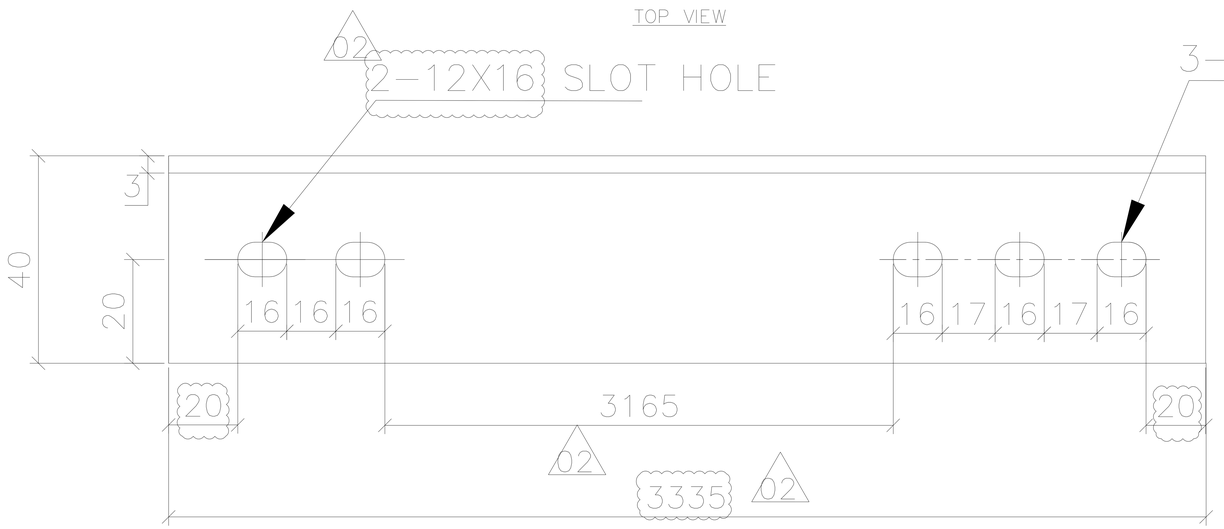

FRONT VIEW

GENERAL NOTES

1. ALL DIMENSIONS ARE IN MILLIMETERS UNLESS OTHERWISE SPECIFIED.
2. HOLE SIZES ARE SHOWN AFTER GALVANIZATION.
3. REMOVE ALL BURRS AND SHARP EDGES.
4. MMS 1 IS FOR FLAT TO 3 DEGREES TERRAIN

REFERENCE DRAWING:
5714-004-P4-PVC-Y-079 GENERAL ARRANGEMENT OF MODULE MOUNTING STRUCTURE

VARIANT NUMBER	ITEM NUMBER	DESCRIPTION	STD	DRAWING NUMBER	ITEM NO / VAR NO	MATERIAL CODE / MATERIAL SPECN	A/C	UNIT / D1	UNIT WEIGHT / QUANTITY	GS	ZONE
	01	BRACING BR-3B 40X40X3-3335				FY 350			As per BOM / As per BOM		

50MWp SOLAR POWER PLANT (P4 BLOCK)

NTPC - MANDSAUR, MP

BHARAT HEAVY ELECTRICALS LIMITED.
PE&SD DIVISION, HYDERABAD

	NAME	SIGN.	DATE	No.OF VAR
DRN	SYAMAL		08.07.2016	
CKD	VENU		08.07.2016	
APPD	ESHAN		08.07.2016	

DEPT.	SCALE	WEIGHT(Kg)	REF. TO ASSY. DRG.	ITEM NO.	No.OF ITEM
PE&SD	NTS	--			

CODE

TITLE
MODULE MOUNTING STRUCTURE
MMS 1: BRACING BR-3B

BHEL DWG NO: PY-DH-3-M086-1260-01
NTPC DWG NO: 5714-004-P4-PVC-Y-080
REV. 02
SHEET NO. 09
NO. OF SHEETS 30

A2

DRAWING NO:

ALL DIMENSIONS ARE IN MILLIMETERS

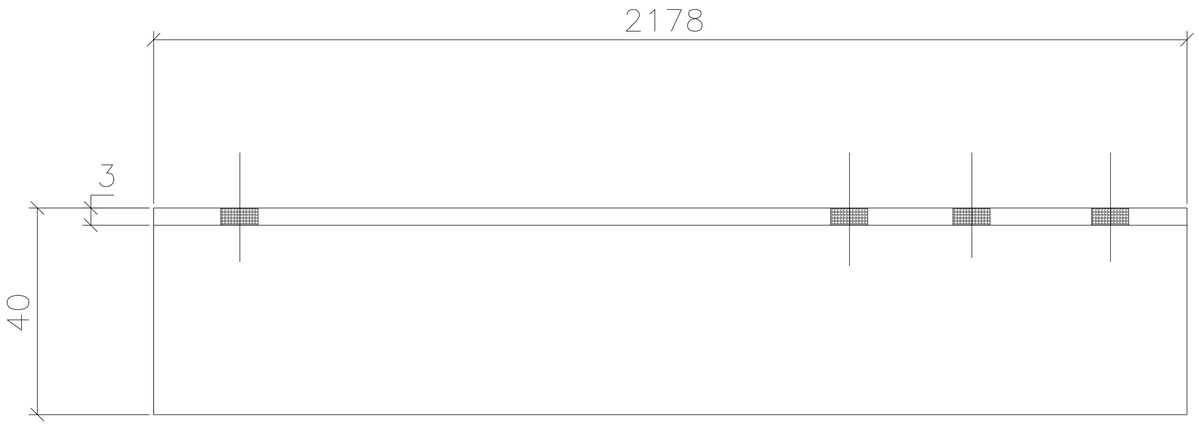

TOP VIEW

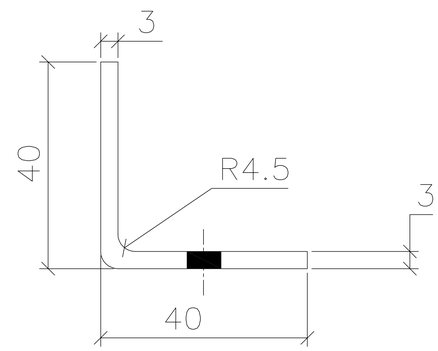

SIDE VIEW

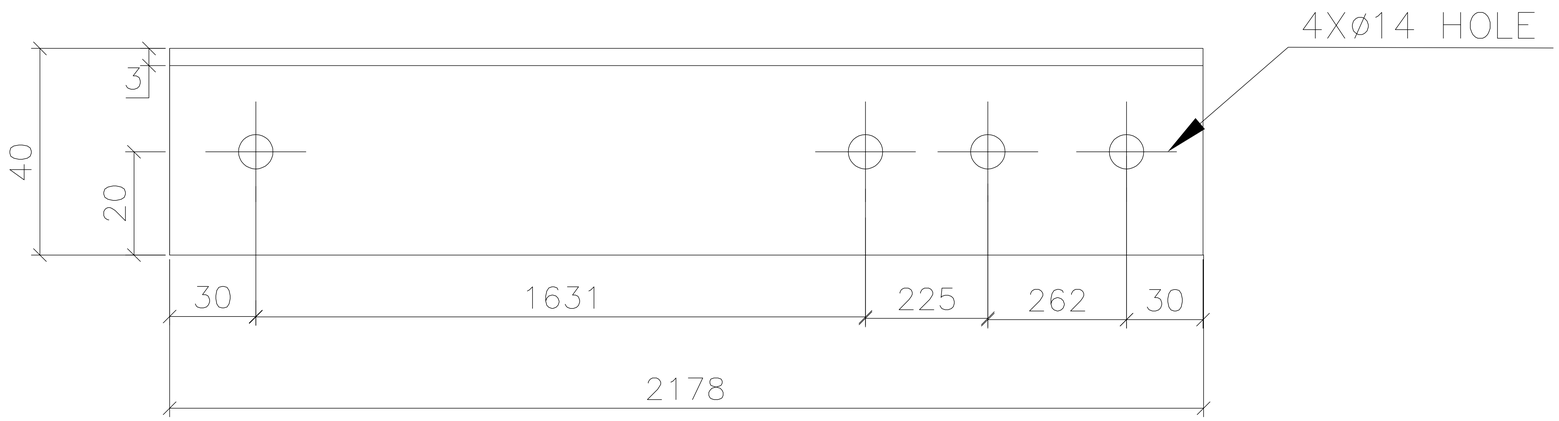

FRONT VIEW

GENERAL NOTES

1. ALL DIMENSIONS ARE IN MILLIMETERS UNLESS OTHERWISE SPECIFIED.
2. HOLE SIZES ARE SHOWN AFTER GALVANIZATION.
3. REMOVE ALL BURRS AND SHARP EDGES.
4. MMS 2 IS FOR 3 DEGREES TO 7 DEGREES TERRAIN

REFERENCE DRAWING:
5714-004-P4-PVC-Y-079 GENERAL ARRANGEMENT OF MODULE MOUNTING STRUCTURE

VARIANT NUMBER	ITEM NUMBER	DESCRIPTION	STD	DRAWING NUMBER	ITEM NO / VAR NO	MATERIAL CODE / MATERIAL SPECN	A/C	UNIT / D1	UNIT WEIGHT / QUANTITY	GS	ZONE
	01	BRACING BR-4							As per BOM		
		40X40X3-2178				FY 350			As per BOM		

50MWp SOLAR POWER PLANT (P4 BLOCK)

NTPC - MANDSAUR, MP

BHARAT HEAVY ELECTRICALS LIMITED.
PE&SD DIVISION, HYDERABAD

	NAME	SIGN.	DATE
DRN	SYAMAL		09.07.2016
CKD	VENU		09.07.2016
APPD	ESHAN		09.07.2016

No.OF VAR

DEPT.	SCALE	WEIGHT(Kg)	REF. TO ASSY. DRG.	ITEM NO.	No.OF ITEM
PE&SD	NTS	--			
CODE					

TITLE
MODULE MOUNTING STRUCTURE
MMS 2: BRACING BR-4

BHEL DWG NO: PY-DH-3-M086-1260-01
NTPC DWG NO: 5714-004-P4-PVC-Y-080
REV. 02
SHEET NO. 16
NO. OF SHEETS 30

A2

DRAWING NO:

ALL DIMENSIONS ARE IN MILLIMETERS

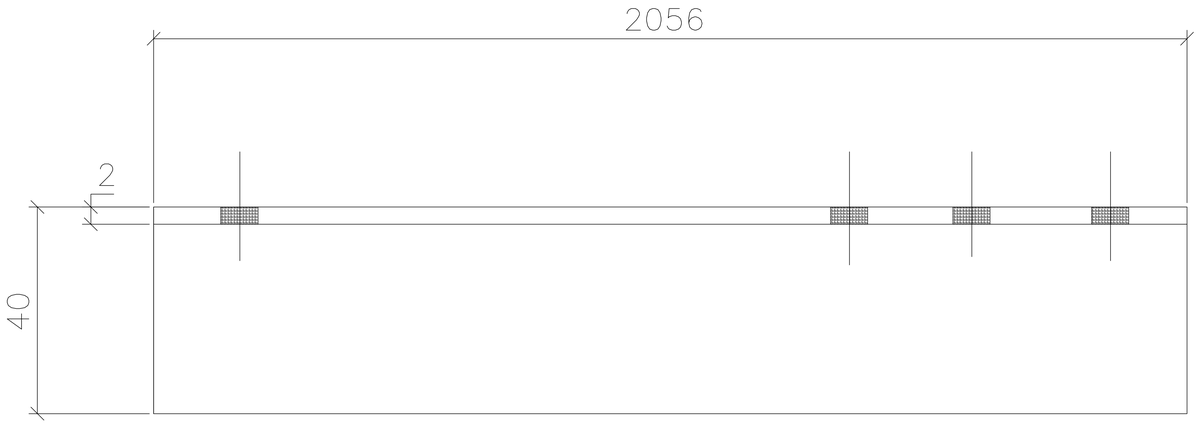

TOP VIEW

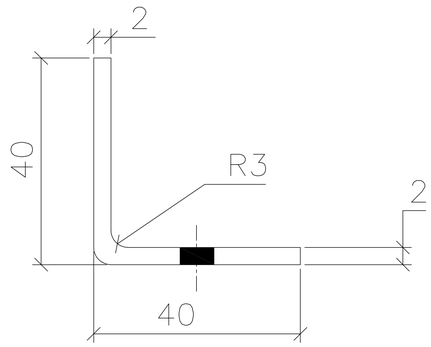

SIDE VIEW

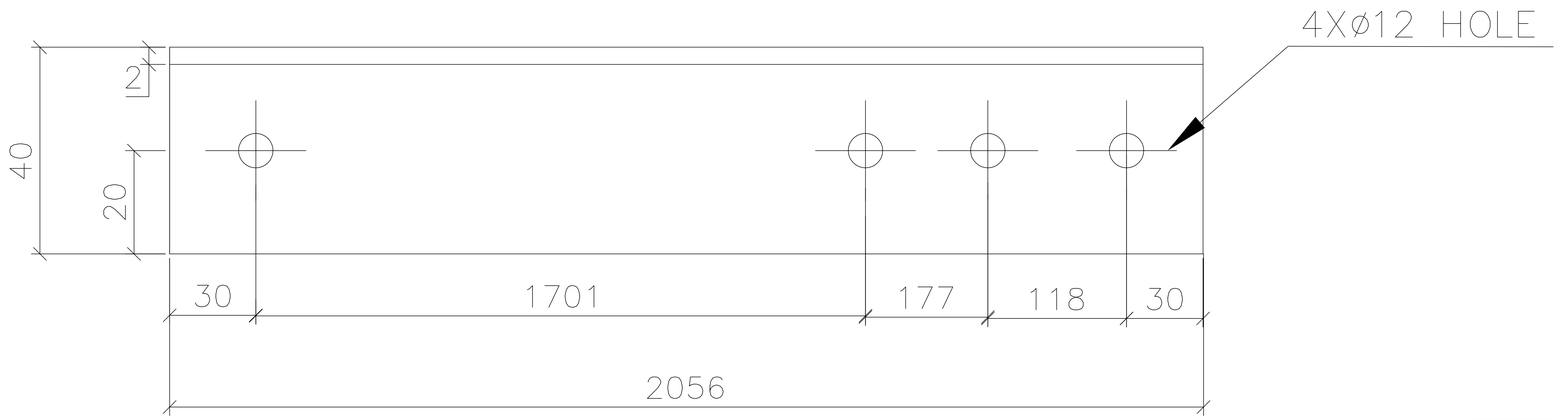

FRONT VIEW

GENERAL NOTES

1. ALL DIMENSIONS ARE IN MILLIMETERS UNLESS OTHERWISE SPECIFIED.
2. HOLE SIZES ARE SHOWN AFTER GALVANIZATION.
3. REMOVE ALL BURRS AND SHARP EDGES.
4. MMS 2 IS FOR 3 DEGREES TO 7 DEGREES TERRAIN

REFERENCE DRAWING:
5714-004-P4-PVC-Y-079 GENERAL ARRANGEMENT OF MODULE MOUNTING STRUCTURE

VARIANT NUMBER	ITEM NUMBER	DESCRIPTION	STD	DRAWING NUMBER	ITEM NO / VAR NO	MATERIAL CODE / MATERIAL SPECN	A/C	UNIT / D1	UNIT WEIGHT / QUANTITY	GS	ZONE
	01	BRACING BR-5							As per BOM		
		40X40X2-2056				FY 350			As per BOM		

50MWp SOLAR POWER PLANT (P4 BLOCK)

NTPC - MANDSAUR, MP

BHARAT HEAVY ELECTRICALS LIMITED.
PE&SD DIVISION, HYDERABAD

	NAME	SIGN.	DATE	No.OF VAR
DRN	SYAMAL		09.07.2016	
CKD	VENU		09.07.2016	
APPD	ESHAN		09.07.2016	

DEPT.	SCALE	WEIGHT(Kg)	REF. TO ASSY. DRG.	ITEM NO.	No.OF ITEM
PE&SD	NTS	--			

CODE

TITLE
MODULE MOUNTING STRUCTURE
MMS 2: BRACING BR-5

BHEL DWG NO: PY-DH-3-M086-1260-01
NTPC DWG NO: 5714-004-P4-PVC-Y-080
REV. 02
SHEET NO. 17
NO. OF SHEETS 30

A2

DRAWING NO:

ALL DIMENSIONS ARE IN MILLIMETERS

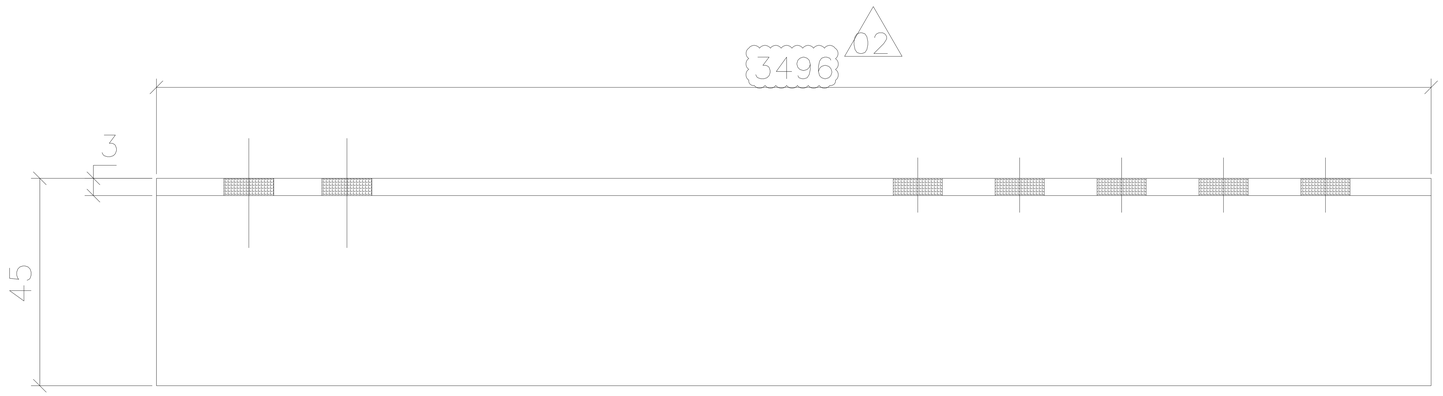

TOP VIEW

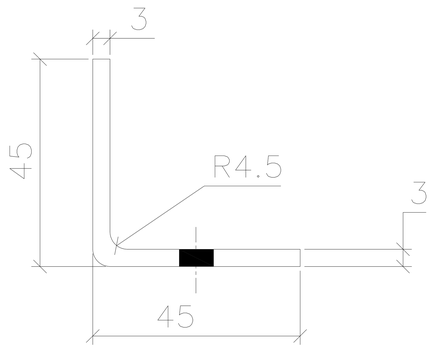

SIDE VIEW

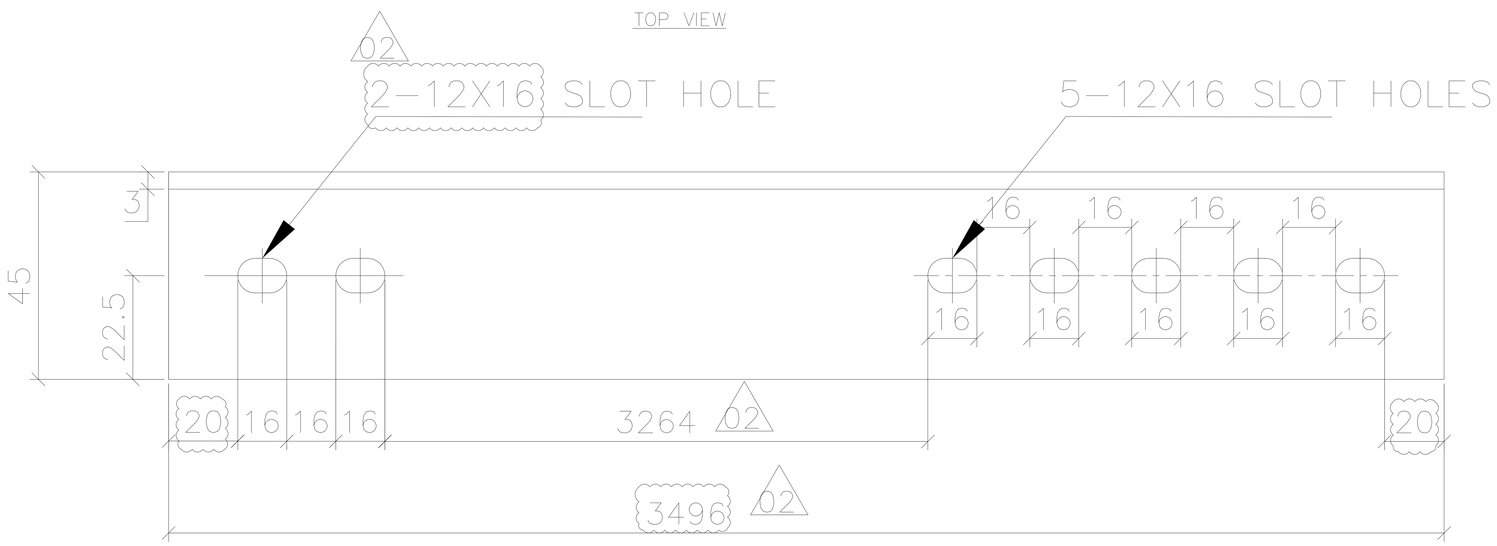

FRONT VIEW

GENERAL NOTES

1. ALL DIMENSIONS ARE IN MILLIMETERS UNLESS OTHERWISE SPECIFIED.
2. HOLE SIZES ARE SHOWN AFTER GALVANIZATION.
3. REMOVE ALL BURRS AND SHARP EDGES.
4. MMS 2 IS FOR 3 DEGREES TO 7 DEGREES TERRAIN

REFERENCE DRAWING:
5714-004-P4-PVC-Y-079 GENERAL ARRANGEMENT OF MODULE MOUNTING STRUCTURE

VARIANT NUMBER	ITEM NUMBER	DESCRIPTION	STD	DRAWING NUMBER	ITEM NO / VAR NO	MATERIAL CODE / MATERIAL SPECN	A/C	UNIT / D1	UNIT WEIGHT / QUANTITY	GS	ZONE
	01	BRACING BR-6A							As per BOM		
		45X45X3-3496				FY 350			As per BOM		

50MWp SOLAR POWER PLANT (P4 BLOCK)

NTPC - MANDSAUR, MP

BHARAT HEAVY ELECTRICALS LIMITED.
PE&SD DIVISION, HYDERABAD

	NAME	SIGN.	DATE	No.OF VAR
DRN	SYAMAL		09.07.2016	
CKD	VENU		09.07.2016	
APPD	ESHAN		09.07.2016	

DEPT.	CODE	SCALE	WEIGHT(Kg)	REF. TO ASSY. DRG.	ITEM NO.	No.OF ITEM
PE&SD		NTS	--			

TITLE
MODULE MOUNTING STRUCTURE
MMS 2: BRACING BR-6A

BHEL DWG NO: PY-DH-3-M086-1260-01
NTPC DWG NO: 5714-004-P4-PVC-Y-080
REV. 02
SHEET NO. 18
NO. OF SHEETS 30

A2

DRAWING NO:

ALL DIMENSIONS ARE IN MILLIMETERS

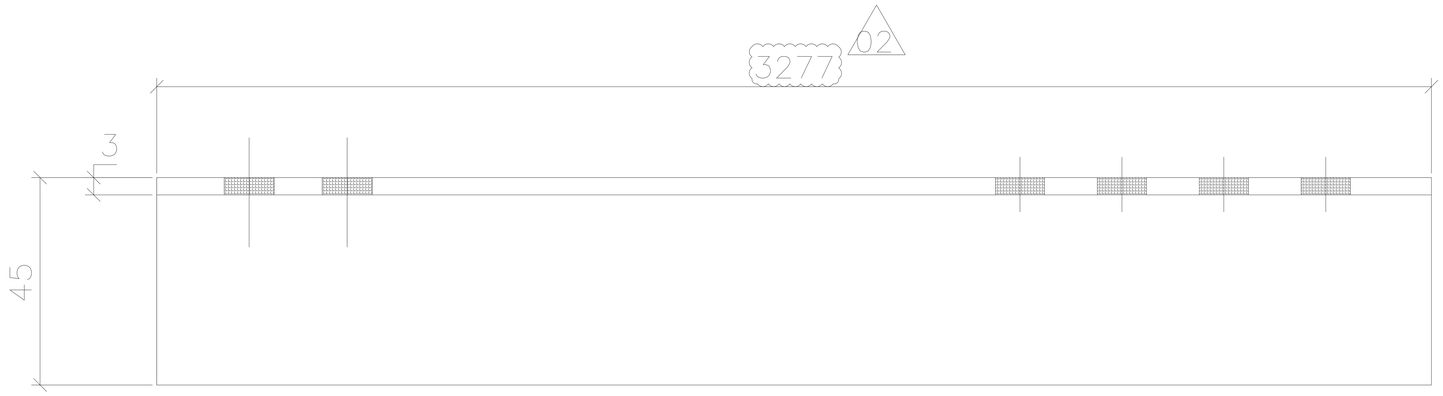

TOP VIEW

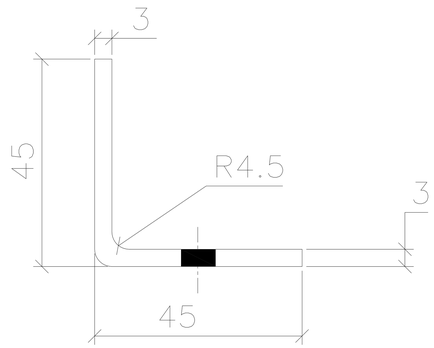

SIDE VIEW

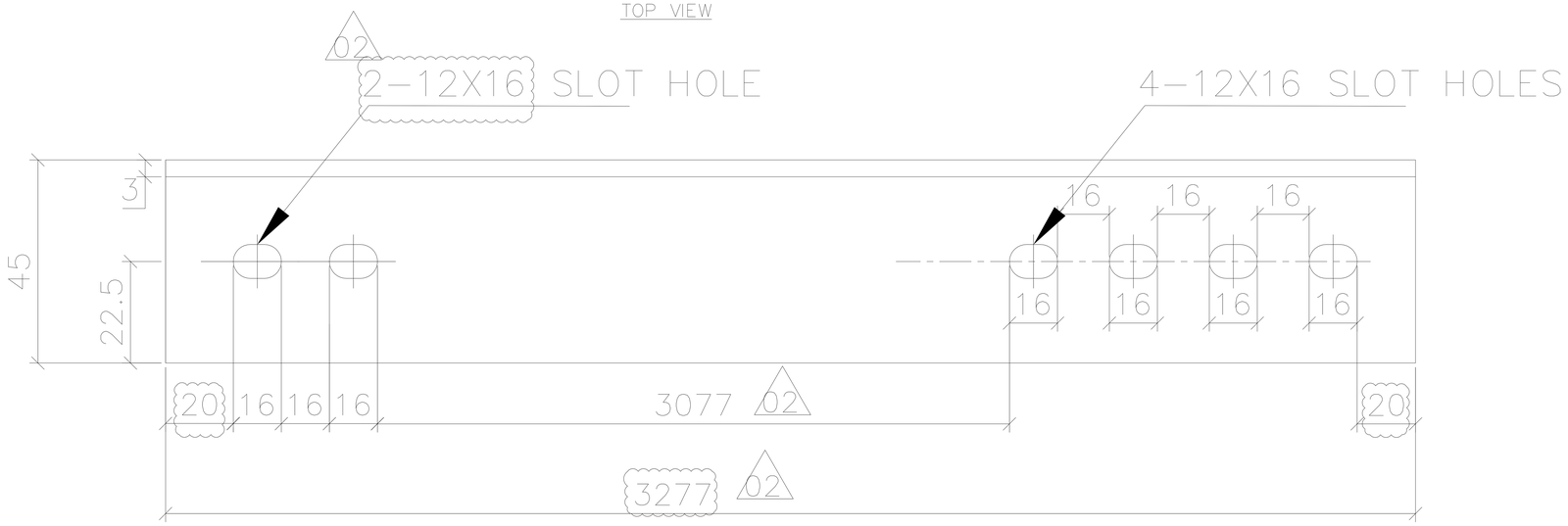

FRONT VIEW

GENERAL NOTES

1. ALL DIMENSIONS ARE IN MILLIMETERS UNLESS OTHERWISE SPECIFIED.
2. HOLE SIZES ARE SHOWN AFTER GALVANIZATION.
3. REMOVE ALL BURRS AND SHARP EDGES.
4. MMS 2 IS FOR 3 DEGREES TO 7 DEGREES TERRAIN

REFERENCE DRAWING:
5714-004-P4-PVC-Y-079 GENERAL ARRANGEMENT OF MODULE MOUNTING STRUCTURE

VARIANT NUMBER	ITEM NUMBER	DESCRIPTION	STD	DRAWING NUMBER	ITEM NO / VAR NO	MATERIAL CODE / MATERIAL SPECN	A/C	UNIT / D1	UNIT WEIGHT / QUANTITY	GS	ZONE
	01	BRACING BR-6B 45X45X3-3277				FY 350			As per BOM / As per BOM		

50MWp SOLAR POWER PLANT (P4 BLOCK)

NTPC - MANDSAUR, MP

BHARAT HEAVY ELECTRICALS LIMITED.
PE&SD DIVISION, HYDERABAD

	NAME	SIGN.	DATE	No.OF VAR
DRN	SYAMAL		09.07.2016	
CKD	VENU		09.07.2016	
APPD	ESHAN		09.07.2016	

DEPT.	SCALE	WEIGHT(Kg)	REF. TO ASSY. DRG.	ITEM NO.	No.OF ITEM
PE&SD	NTS	--			

CODE

TITLE
MODULE MOUNTING STRUCTURE
MMS 2: BRACING BR-6B

BHEL DWG NO: PY-DH-3-M086-1260-01
NTPC DWG NO: 5714-004-P4-PVC-Y-080
REV. 02
SHEET NO. 19
NO. OF SHEETS 30

A2

DRAWING NO:

ALL DIMENSIONS ARE IN MILLIMETERS

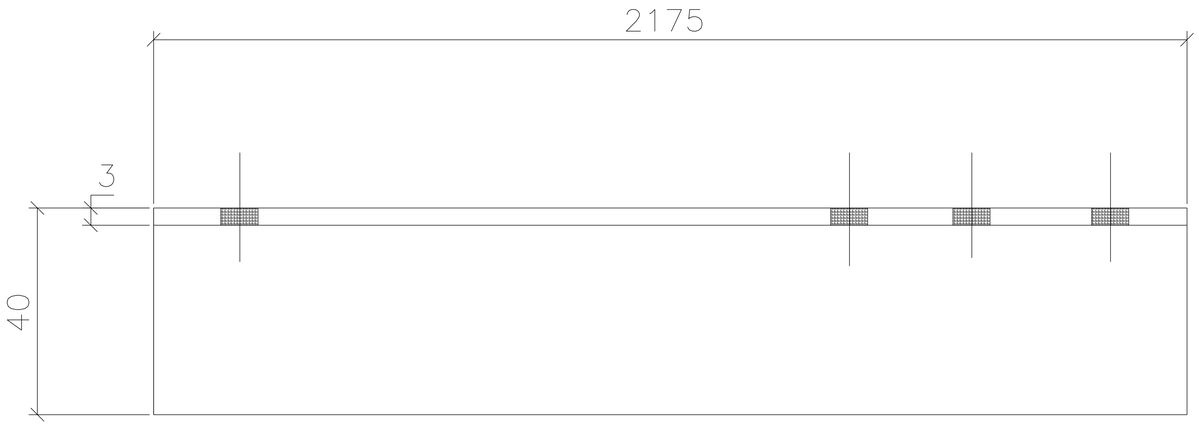

TOP VIEW

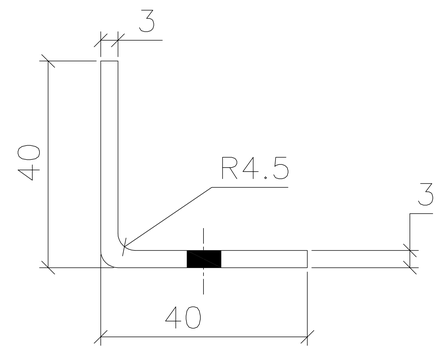

SIDE VIEW

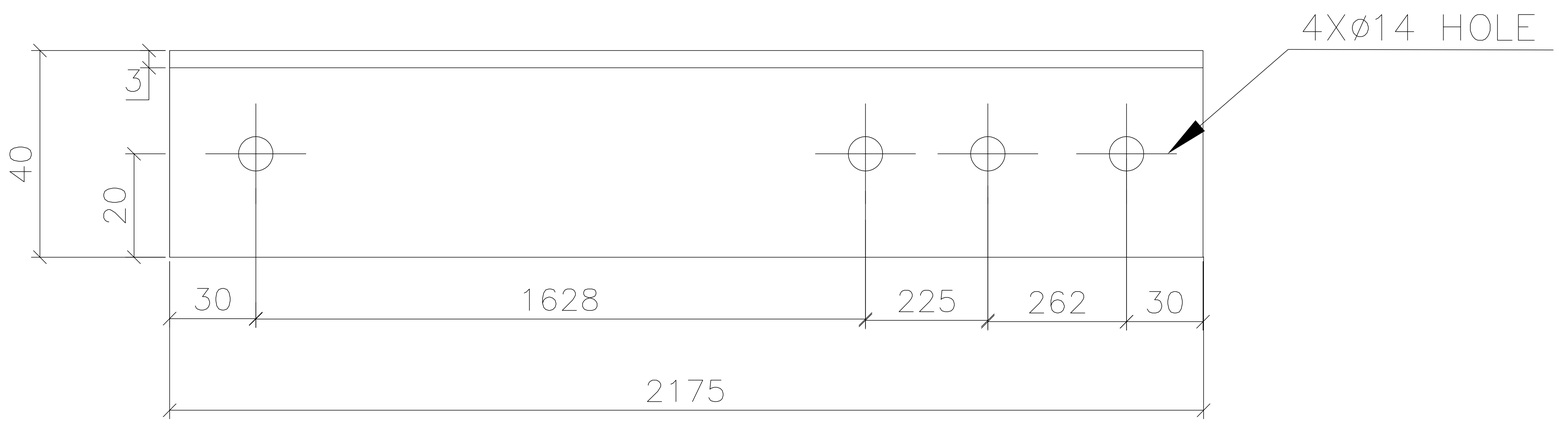

FRONT VIEW

GENERAL NOTES

1. ALL DIMENSIONS ARE IN MILLIMETERS UNLESS OTHERWISE SPECIFIED.
2. HOLE SIZES ARE SHOWN AFTER GALVANIZATION.
3. REMOVE ALL BURRS AND SHARP EDGES.
4. MMS 3 IS FOR 7 DEGREES TO 11.3 DEGREES TERRAIN

REFERENCE DRAWING:
5714-004-P4-PVC-Y-079 GENERAL ARRANGEMENT OF MODULE MOUNTING STRUCTURE

VARIANT NUMBER	ITEM NUMBER	DESCRIPTION	STD	DRAWING NUMBER	ITEM NO / VAR NO	MATERIAL CODE / MATERIAL SPECN	A/C	UNIT / D1	UNIT WEIGHT / QUANTITY	GS	ZONE
	01	BRACING BR-7 40X40X3-2175				FY 350			As per BOM / As per BOM		

50MWp SOLAR POWER PLANT (P4 BLOCK)

NTPC - MANDSAUR, MP

BHARAT HEAVY ELECTRICALS LIMITED.
PE&SD DIVISION, HYDERABAD

	NAME	SIGN.	DATE	No.OF VAR
DRN	SYAMAL		09.07.2016	
CKD	VENU		09.07.2016	
APPD	ESHAN		09.07.2016	

DEPT.	CODE	SCALE	WEIGHT(Kg)	REF. TO ASSY. DRG.	ITEM NO.	No.OF ITEM
PE&SD		NTS	--			

TITLE
MODULE MOUNTING STRUCTURE
MMS 3: BRACING BR-7

BHEL DWG NO: PY-DH-3-M086-1260-01
NTPC DWG NO: 5714-004-P4-PVC-Y-080
REV. 02
SHEET NO. 26
NO. OF SHEETS 30

A2

DRAWING NO:

ALL DIMENSIONS ARE IN MILLIMETERS

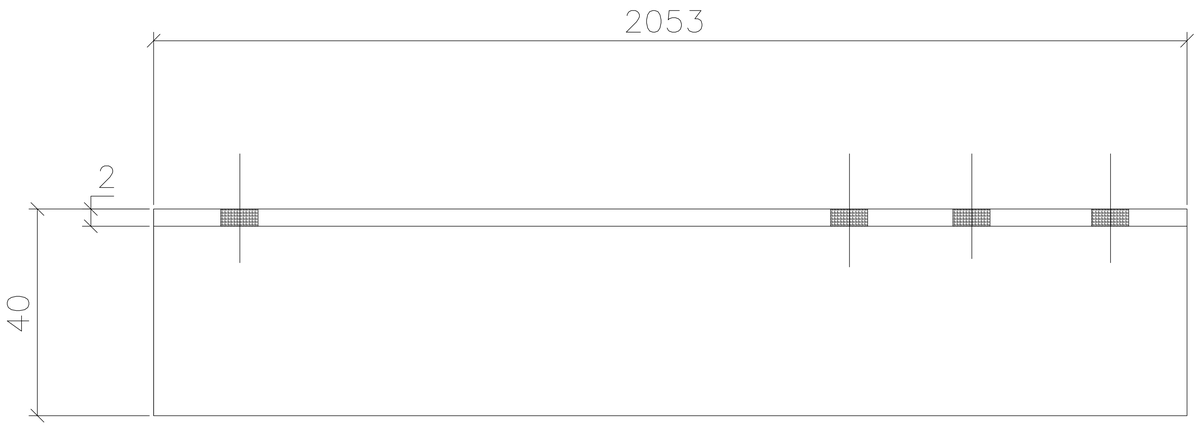

TOP VIEW

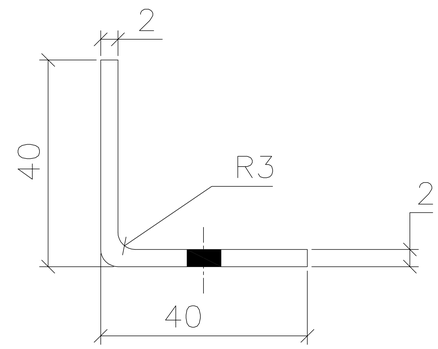

SIDE VIEW

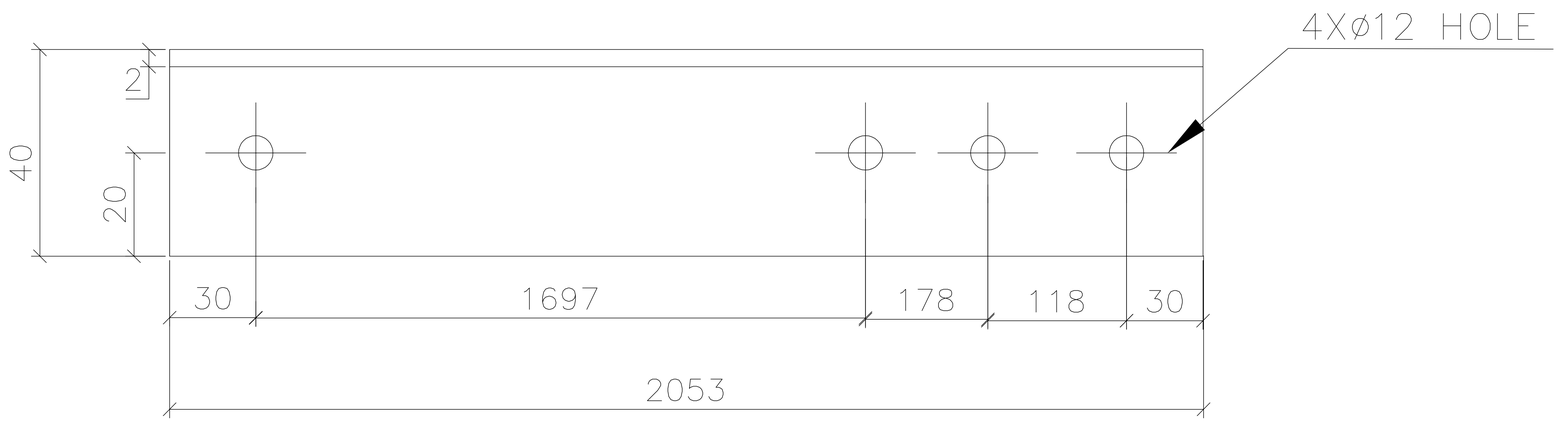

FRONT VIEW

GENERAL NOTES

1. ALL DIMENSIONS ARE IN MILLIMETERS UNLESS OTHERWISE SPECIFIED.
2. HOLE SIZES ARE SHOWN AFTER GALVANIZATION.
3. REMOVE ALL BURRS AND SHARP EDGES.
4. MMS 3 IS FOR 7 DEGREES TO 11.3 DEGREES TERRAIN

REFERENCE DRAWING:
5714-004-P4-PVC-Y-079 GENERAL ARRANGEMENT OF MODULE MOUNTING STRUCTURE

VARIANT NUMBER	ITEM NUMBER	DESCRIPTION	STD	DRAWING NUMBER	ITEM NO / VAR NO	MATERIAL CODE / MATERIAL SPECN	A/C	UNIT / D1	UNIT WEIGHT / QUANTITY	GS	ZONE
	01	BRACING BR-8							As per BOM		
		40X40X2-2053				FY 350			As per BOM		

50MWp SOLAR POWER PLANT (P4 BLOCK)

NTPC - MANDSAUR, MP

BHARAT HEAVY ELECTRICALS LIMITED.
PE&SD DIVISION, HYDERABAD

	NAME	SIGN.	DATE	No.OF VAR
DRN	SYAMAL		09.07.2016	
CKD	VENU		09.07.2016	
APPD	ESHAN		09.07.2016	

DEPT.	SCALE	WEIGHT(Kg)	REF. TO ASSY. DRG.	ITEM NO.	No.OF ITEM
PE&SD	NTS	--			
CODE					

TITLE
MODULE MOUNTING STRUCTURE
MMS 3: BRACING BR-8

BHEL DWG NO: PY-DH-3-M086-1260-01
NTPC DWG NO: 5714-004-P4-PVC-Y-080
REV. 02

SHEET NO. 27 NO. OF SHEETS 30

A2

DRAWING NO:

ALL DIMENSIONS ARE IN MILLIMETERS

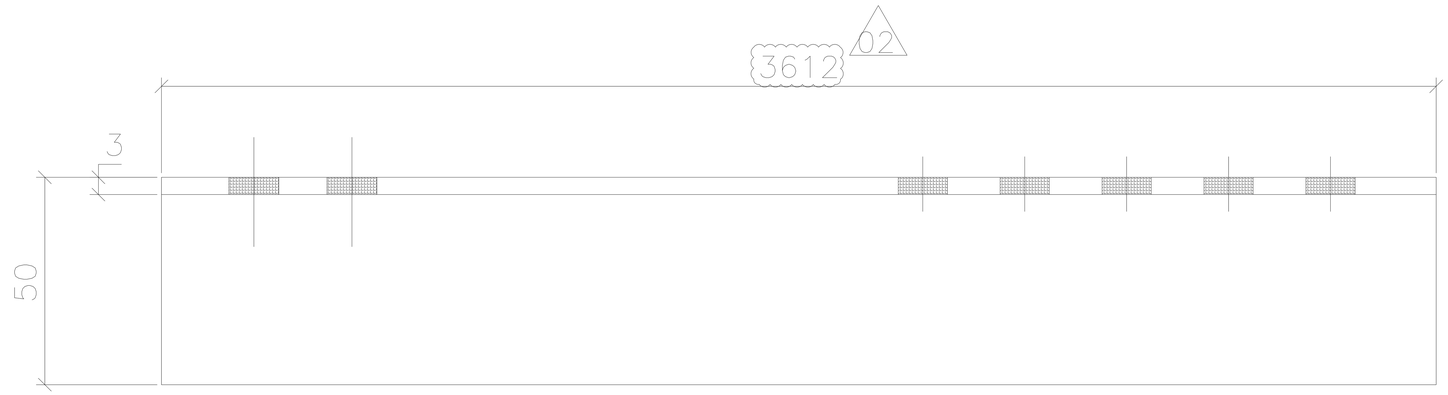

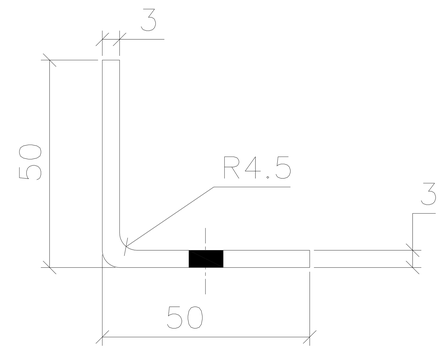

SIDE VIEW

TOP VIEW

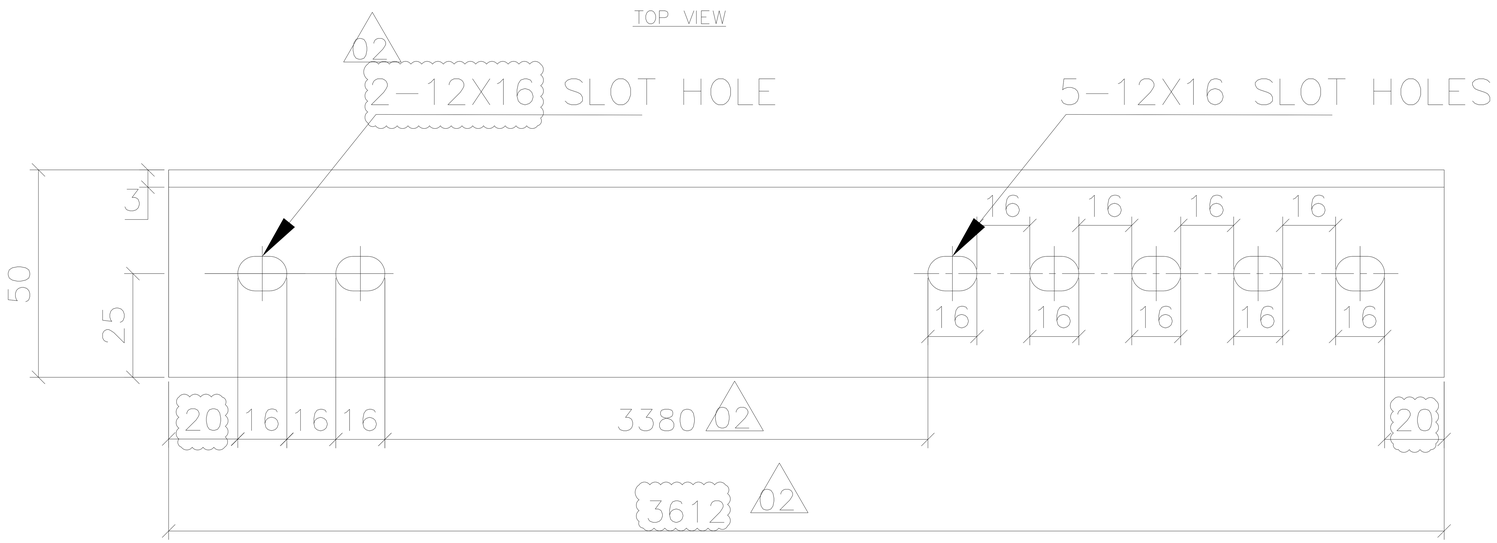

FRONT VIEW

GENERAL NOTES

1. ALL DIMENSIONS ARE IN MILLIMETERS UNLESS OTHERWISE SPECIFIED.
2. HOLE SIZES ARE SHOWN AFTER GALVANIZATION.
3. REMOVE ALL BURRS AND SHARP EDGES.
4. MMS 3 IS FOR 7 DEGREES TO 11.3 DEGREES TERRAIN

REFERENCE DRAWING:
5714-004-P4-PVC-Y-079 GENERAL ARRANGEMENT OF MODULE MOUNTING STRUCTURE

VARIANT NUMBER	ITEM NUMBER	DESCRIPTION	STD	DRAWING NUMBER	ITEM NO / VAR NO	MATERIAL CODE / MATERIAL SPECN	A/C	UNIT / D1	UNIT WEIGHT / QUANTITY	GS	ZONE
	01	BRACING BR-9A 50X50X3-3612				FY 350			As per BOM / As per BOM		

50MWp SOLAR POWER PLANT (P4 BLOCK)

NTPC - MANDSAUR, MP

BHARAT HEAVY ELECTRICALS LIMITED.
PE&SD DIVISION, HYDERABAD

	NAME	SIGN.	DATE	No.OF VAR
DRN	SYAMAL		09.07.2016	
CKD	VENU		09.07.2016	
APPD	ESHAN		09.07.2016	

DEPT.	SCALE	WEIGHT(Kg)	REF. TO ASSY. DRG.	ITEM NO.	No.OF ITEM
PE&SD	NTS	--			

CODE

TITLE
MODULE MOUNTING STRUCTURE
MMS 3: BRACING BR-9A

BHEL DWG NO: PY-DH-3-M086-1260-01
NTPC DWG NO: 5714-004-P4-PVC-Y-080
REV. 02

SHEET NO. 28 NO. OF SHEETS 30

A2

DRAWING NO:

ALL DIMENSIONS ARE IN MILLIMETERS

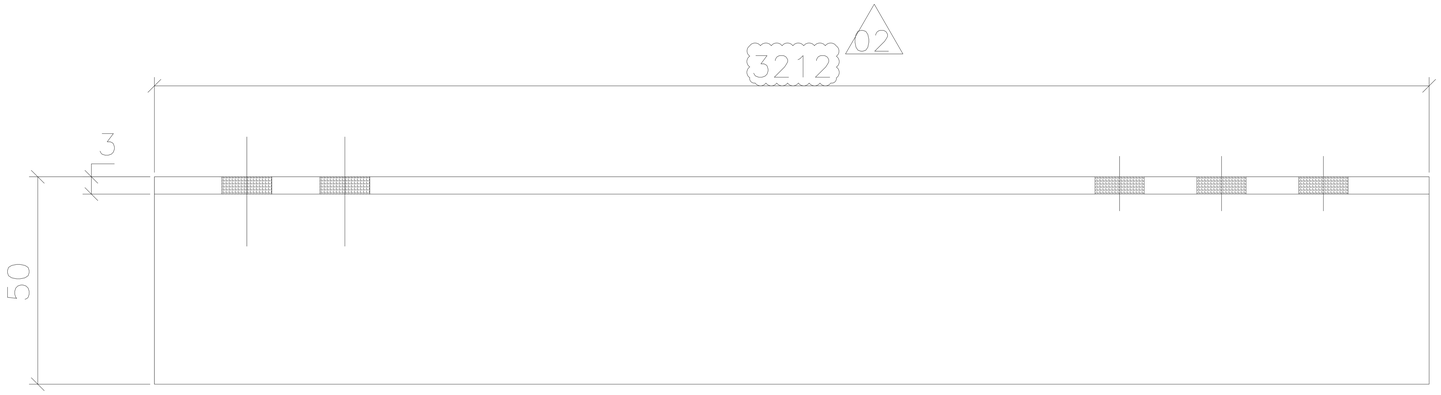

TOP VIEW

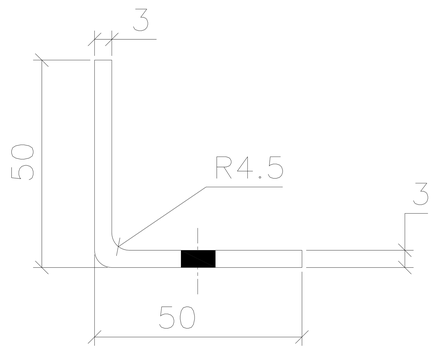

SIDE VIEW

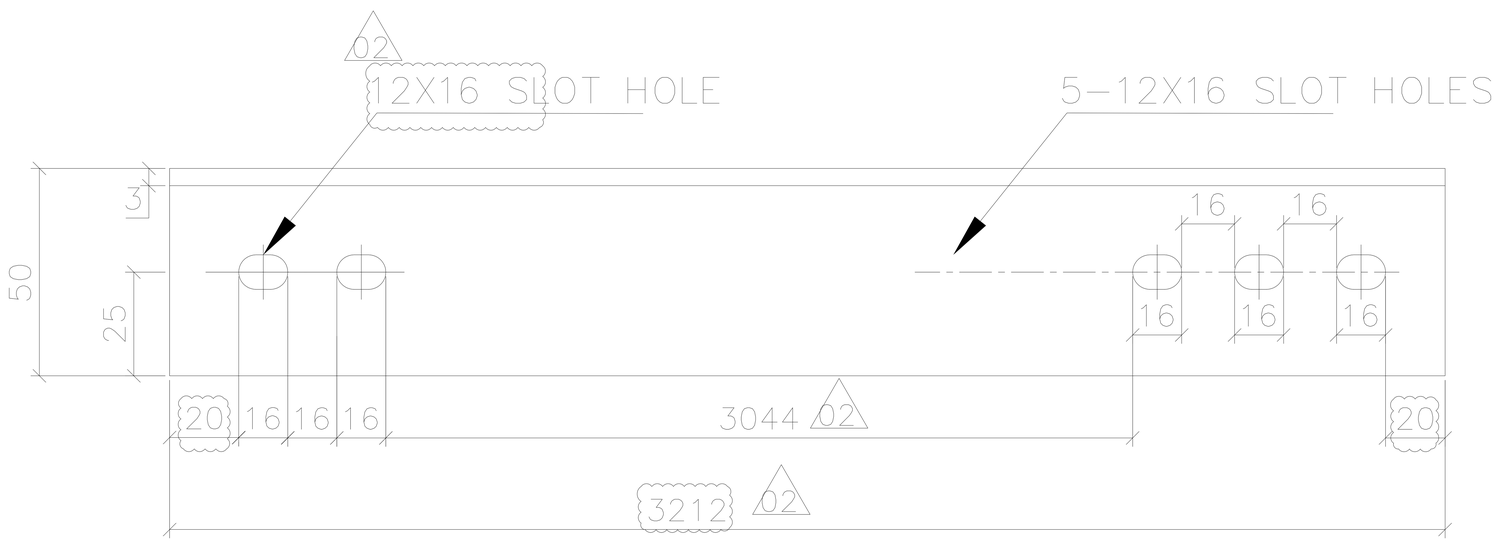

FRONT VIEW

GENERAL NOTES

1. ALL DIMENSIONS ARE IN MILLIMETERS UNLESS OTHERWISE SPECIFIED.
2. HOLE SIZES ARE SHOWN AFTER GALVANIZATION.
3. REMOVE ALL BURRS AND SHARP EDGES.
4. MMS 3 IS FOR 7 DEGREES TO 11.3 DEGREES TERRAIN

REFERENCE DRAWING:
5714-004-P4-PVC-Y-079 GENERAL ARRANGEMENT OF MODULE MOUNTING STRUCTURE

VARIANT NUMBER	ITEM NUMBER	DESCRIPTION	STD	DRAWING NUMBER	ITEM NO / VAR NO	MATERIAL CODE / MATERIAL SPECN	A/C	UNIT / D1	UNIT WEIGHT / QUANTITY	GS	ZONE
	01	BRACING BR-9B							As per BOM		
		50X50X3-3212				FY 350			As per BOM		

50MWp SOLAR POWER PLANT (P4 BLOCK)

NTPC - MANDSAUR, MP

BHARAT HEAVY ELECTRICALS LIMITED.
PE&SD DIVISION, HYDERABAD

	NAME	SIGN.	DATE	No.OF VAR
DRN	SYAMAL		09.07.2016	
CKD	VENU		09.07.2016	
APPD	ESHAN		09.07.2016	

DEPT.	SCALE	WEIGHT(Kg)	REF. TO ASSY. DRG.	ITEM NO.	No.OF ITEM
PE&SD	NTS	--			

CODE

TITLE
MODULE MOUNTING STRUCTURE
MMS 3: BRACING BR-9B

BHEL DWG NO: PY-DH-3-M086-1260-01
NTPC DWG NO: 5714-004-P4-PVC-Y-080
REV. 02

SHEET NO. 29 NO. OF SHEETS 30

A2