COPYRIGHT AND CONFIDENTIAL
The information on this document is the property of BHARAT HEAVY ELECTRICALS LIMITED.
It must not be used directly or indirectly in any way detrimental to the interest of the company.

PACKING, PRESERVATION AND SHIPPING INSTRUCTIONS FOR VENDOR SUPPLIED ITEMS

1.0 **Description**

This specification specifies the packing, preservation and shipping requirements for Gas Turbine vendor supplied items.

2.0 **Following are the minimum requirements to be followed for packing, preservation and shipping**

1) Packing drawings with packing list, list of deliverables, details of no. of packages, package dimensions and weight shall be submitted for BHEL approval during detail engineering. No item shall be dispatched without BHEL approved packing drawing.

2) Packing shall be accomplished in accordance with acceptable seaworthy packing and commercial practices for all shipments. Vendor shall prepare shipment of all the equipment, such that they will be protected from damage in handling and transit. All items shall reach site in undamaged conditions.

3) It is the responsibility of the vendor to determine that the packaging done is adequate to assure that all equipment shall arrive at destination in an undamaged condition and ready for the intended use.

4) Packing together components of dissimilar metals shall be avoided. Carbon steel material and stainless steel material shall be packed in separate packing cases.

5) Packing shall provide suitable protection for storage on site for a period of 1 year under the ambient conditions specified without any further protection.

6) All instruments and delicate components shall be de-mounted, preserved and packed separately.

7) **3 – Layer Wrapping**

All the items shall be individually wrapped with the following 3 layers minimum.

- Layer 1 - Polythene sheet of 100 GSM.
- Layer 2 - Two layers of stretch film sheet of 70 GSM (each).
- Layer 3 - HDPE Tarpaulin sheet of 150 GSM.

8) Each loose item shall be individually tagged with identification number and its assembly drawing. All equipment shall be identified at the shop with a metal tag or other permanent material securely attached to the equipment. Where equipment is not shipped as an assembled unit, each component or sub-assembly shall be properly tagged.

9) Each shipping container shall contain two packing lists, listing all contents of the particular container with one copy in a waterproof envelope inside the container and other copy shall be kept in a metallic pocket in a secure manner outside the container.

10) Inner walls of the package shall be covered with HDPE Tarpaulin sheet of 150 GSM.

RESTRICTED USE

Apr Sat 8 12:51 2017 This Drawing is printed from Engineering Digital Archive System (EDAS) Printed by : KRANTHI KUMAR CH-FME3041 / 6146368-TR1 on 03-04-19 10:54:00 Unauthorised Signatures are not acceptable in EDAS.

COPYRIGHT AND CONFIDENTIAL
The information on this document is the property of BHARAT HEAVY ELECTRICALS LIMITED.
It must not be used directly or indirectly in any way detrimental to the interest of the company.

11) Desiccant (silica gel to spec IS: 3401) filled in dust free air permeable linean bags shall be provided inside the packing consignments to absorb the moisture during transit. The desiccant quantity shall be minimum 15 TEH (525 g) for 1m^3 of air within the packing case.

12) All packages shall be marked with weight and center of gravity. Lifting points for lifting the package shall be clearly marked on the package.

13) All the openings of the equipment shall be closed with 10mm thick plywood sheet and the edges shall be sealed with GI sheet.

14) Sufficient battens (lined with water proof bituminised paper/HDPE Tarpaulin 150 GSM together with rubber sheet) shall be provided at appropriate places to arrest the movement of the goods inside the package during transit. The movement of the equipment in the packing case shall be firmly arrested by firmly fixing the equipment to the bottom of the packing case.

15) All open piping ends on the skid and all open ends of loose-shipped interconnecting piping shall be treated with 'Shell Ensis Fluid SDC' and closed off by metal or wooden blanks. The blanks shall be of the same rating as the piping and shall be bolted with a minimum of 4 bolts. A gasket shall be used. Plastic blanks shall not be permitted, except for piping and tubing of 20 mm and smaller.

16) Tube ends and other similar open ends shall be protected from both external damage and ingress of dirt and moisture during transit and while awaiting erection at Site. Flanged pipes shall have their open ends protected by adhesive tape or jointing and then be covered with a wooden blank flange secured by service bolts.

17) Cabinets and panels shall be suitably protected against damage by (sea) water, sand, rough handling and pilferage. They shall be completely enveloped as mentioned in Sl. No. 7 and hermetically sealed. Moisture absorbing silica gel envelopes shall be securely fixed to both the inside and outside of each cabinet\panel.

18) All stencil markings on the outside of casing shall be either of a waterproof material or protected by shellac or varnish to prevent obliteration in transit.

19) The equipment and packing must be provided with greater use of shock absorbent materials to with stand the rough conditions of the road during transport.

20) All shipping containers shall be identified with the Work order No, BHEL Purchase order No, serial order No. / Case No. as identified in the deliverable list, component part, BHEL material (when applicable), Net weight & Gross weight, packing dimensions (L x W x H), markings showing the upright position, sling position, C.G., marking showing the fragile contents and shipping number. On all the shipping containers following shall be marked with bold letters "GAS TURBINE ITEMS" and equipment name (like VENT FAN, INLET DUCT, GT ENCLOSURE etc.).

21) On the packing list, the applicable drawing number, components and part number of the equipment shall be clearly marked. Each component that is shipped shall be identified and keyed to the packing list.

22) All equipment shall leave the Vendor's facility in a clean and dry condition both inside and outside.

23) Shipping braces, covers etc. to be removed at installation, shall be painted yellow.

RESTRICTED USE
Apr Sat 8 12:51 2017
Printed by : KRANTHI KUMAR CH-FME3041 / 6146368-TR1 on 03-04-19 10:54:00
This Drawing is printed from Engineering Digital Archive System (EDAS)
Intellectual rights are not transferred to the recipient.

COPYRIGHT AND CONFIDENTIAL
The information on this document is the property of BHARAT HEAVY ELECTRICALS LIMITED.
It must not be used directly or indirectly in any way detrimental to the interest of the company.

24) Un-protected surfaces of steel and cast iron components, tools, bearings, shaft seals etc. shall be covered with VCI paper.

25) When more than one shipping container is required, vendor shall provide suitable container marking for identification of the parts at site. Assembly instructions shall be included with each shipment.

26) Instruments, impulse lines and tubing, where removed, shall be tagged and crated. Open ends shall be properly sealed. Tubing between skids shall be provided with unions at the skid edge, cabling between skids shall be coiled and clearly tagged.

27) All the components, sub-assemblies and assemblies shall be packed seal tight. All the opening of the components, sub-assemblies and assemblies shall be blanketed to prevent the ingress of dust and moisture.

28) All sharp corners and edges shall be protected by covering with rubber mats to prevent damage to the packing.

29) The timber used shall be of non-coniferous type as per specification HY51463 for Beams & Runners. Ply Wood planks as per specification IS:303 Gr. “MR” Type A,B shall be used for the Sides, Top & Bottom of the Packing Cases.

30) Commissioning spares and mandatory spares shall be packed separately and distinctly marked in red color with boldly written “S” mark on each face of the box.

31) Adequate preservation for 6 months shall be provided while packing.

32) **Closed Packing Case**

Closed packing case shall be constructed as per the following minimum. The packing shall be seal tight.

- Bottom 20mm thick PLYWOOD with beading.
- All sides and top 12mm thick PLYWOOD with beading.
- Adequate battens lined with HDPE Tarpaulin 150 GSM and rubber sheet to prevent the movement of equipment/component inside the packing case.
- Inner surface of the packing case covered with HDPE Tarpaulin 150 GSM.
- Outer surface of the packing case covered with 0.3 to 0.4 mm thick GI sheet to spec IS: 277 GR 450.
- Adequate wooden pieces and rubber sheets shall be provided between the components, around sharp corners & edges to prevent damage.
- Window shall be provided on the packing case for customs inspection.

33) **Steel Crate Packing**

Steel crate packing shall be constructed as per the following minimum.

- Steel structural frame using beams, channels around the ducts / structures (designed for the lifting load).
- All sides of the steel frame shall be closed with 12 mm thick plywood.
- Outer surface covered with 0.4 mm thick GI sheet to spec IS: 277 GR 450.
- Adequate wooden pieces and rubber sheets shall be provided between the ducts / structures, around sharp corners & edges.

RESTRICTED USE
Apr Sat 8 12:51 2017 This Drawing is printed from Engineering Digital Archive System (EDAS) Intellectual rights are not assigned to it.
Printed by : KRANTHI KUMAR CH-FME3041 / 6146368-TR1 on 03-04-19 10:54:00

COPYRIGHT AND CONFIDENTIAL
The information on this document is the property of BHARAT HEAVY ELECTRICALS LIMITED.
It must not be used directly or indirectly in any way detrimental to the interest of the company.

- Provision for lifting shall be provided on the steel crates.
- Window shall be provided on the packing for customs inspection.

3.0 **Vent Fan**

1) All the flange openings of the fan shall be closed with 10mm thick plywood sheet and the edges shall be sealed with GI sheet.
2) Fan & drive motor assembly and all other components (dampers, transition ducts, rain hoods, bird screen, silencer, CO2 latch, tubing, connectors, limit switch, gaskets; fasteners etc.) shall be individually wrapped with minimum **3 – Layer Wrapping**.
3) All the components including fan & drive motor assembly shall be packed in **Closed Packing Case**.

CLOSED PACKING CASE

4) Fan & drive motor assembly shall be rigidly fixed to the bottom of the packing case with screws. Adequate battens lined with HDPE Tarpaulin 150 GSM and rubber sheet shall be provided around the fan assembly to arrest the movement.
5) The packing of fan and drive motor must be designed to sustain transportation and handling effect loads of up to 2g.
6) Stainless steel material like tubing, CO2 latch, bird mesh shall be packed in separate packing case.
7) Adequate wooden pieces and rubber sheets shall be provided between the components, around sharp corners & edges to prevent damage.

.

RESTRICTED USE
Apr Sat 8 12:51 2017 Printed by : KRANTHI KUMAR CH-FME3041 / 6146368-TR1 on 03-04-19 10:54:00
This Drawing is printed from Engineering Digital Archive System (EDAS)
Intellectual rights are not assigned to the print.

COPYRIGHT AND CONFIDENTIAL
The information on this document is the property of BHARAT HEAVY ELECTRICALS LIMITED.
It must not be used directly or indirectly in any way detrimental to the interest of the company.

4.0 **Vent Duct**

1) All the flange openings of the duct shall be closed with 10mm thick plywood sheet and the edges shall be sealed with GI sheet.
2) All the components (ducts, expansion joint, structural members, dampers, CO2 latch, rain hood, bird mesh, gaskets, fasteners etc.) shall be individually wrapped with minimum **3 – Layer Wrapping**.
3) Expansion joint, dampers, CO2 latch, rain hood, bird mesh, gaskets, fasteners etc. shall be packed in **Closed Packing Case**.
4) Stainless steel material like CO2 latch, bird mesh shall be packed in separate packing case.

5.0 **Inlet duct**

1) All the flange openings of the ducts, silencer duct, elbow ducts, transition duct, plenum covers shall be closed with 12 mm thick plywood sheet and the edges shall be sealed with GI sheet.

DUCT OPENINGS CLOSED WITH 12 MM THICK PLYWOOD SHEET AND EDGES SEALED WITH GI SHEET

2) All the components (ducts, silencer duct, silencer panels, elbow ducts, transition duct, plenum covers, expansion joints, structural members, bleed heat piping, trash screen, gaskets, fasteners, foundation bolts etc.) shall be individually wrapped with minimum **3 – Layer Wrapping**.
3) Silencer panels, expansion joints, structural members etc. shall be packed in **Steel Crate Packing**. Silencer panels shall be stacked vertically in the steel crates.
4) Structural members should not protrude outside the steel crates.
5) Stainless steel material like bleed heat piping, trash screen etc. shall be packed in separate packing case.
6) Bleed heat piping, gussets, foundation plates, gaskets, fasteners, foundation bolts, guide blocks etc. shall be packed in **Closed Packing Case**.

RESTRICTED USE
Apr Sat 8 12:51 2017
Printed by : KRANTHI KUMAR CH-FME3041 / 6146368-TR1 on 03-04-19 10:54:00
This Drawing is printed from Engineering Digital Archive System (EDAS)
Intellectual rights are not assigned to the user.

PRODUCT STANDARD

HYDERABAD

COPYRIGHT AND CONFIDENTIAL
The information on this document is the property of BHARAT HEAVY ELECTRICALS LIMITED.
It must not be used directly or indirectly in any way detrimental to the interest of the company.

INLET DUCT PACKING

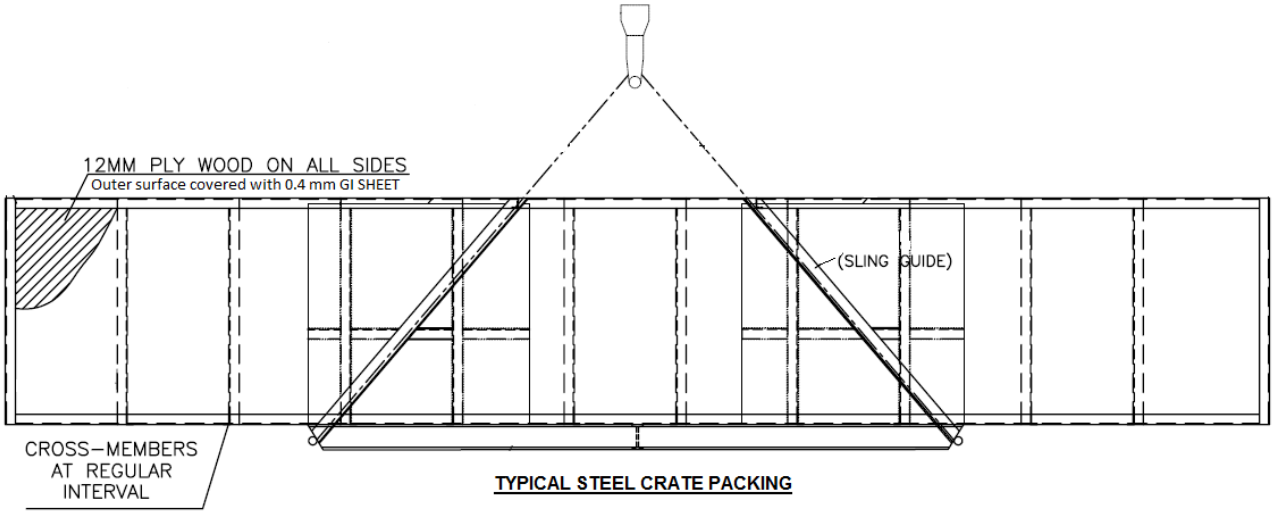

TYPICAL STEEL CRATE PACKING

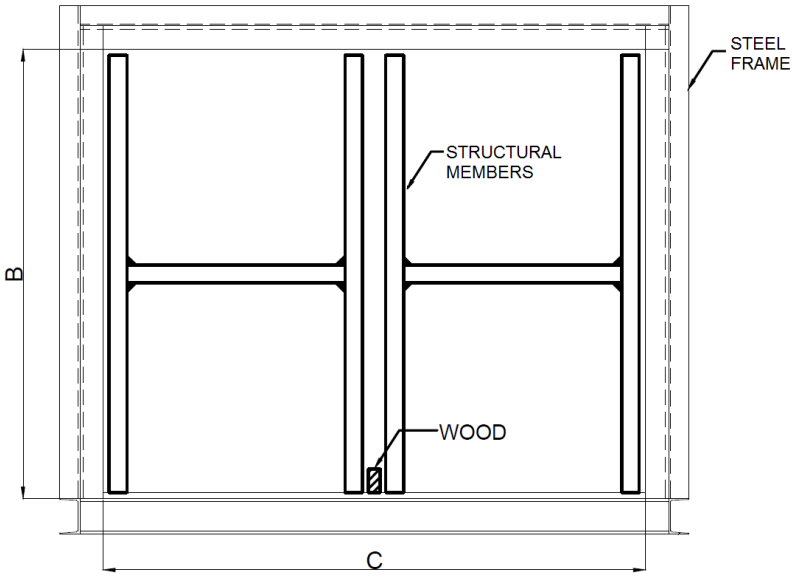

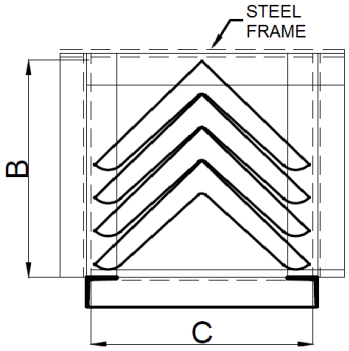

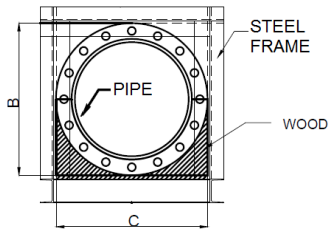

RESTRICTED USE
Apr Sat 8 12:51 2017
Printed by : KRANTHI KUMAR CH-FME3041 / 6146368-TR1 on 03-04-19 10:54:00
This Drawing is printed from Engineering Digital Archive System (EDAS)
Intellectual rights are not assigned to this print.

COPYRIGHT AND CONFIDENTIAL
The information on this document is the property of BHARAT HEAVY ELECTRICALS LIMITED.
It must not be used directly or indirectly in any way detrimental to the interest of the company.

6.0 **GT & Generator Enclosure, GVM Enclosure, Water injection skid Enclosure**

1) All the components (wall panels, door panels, roof panels, dampers, ducts, rain hood, ladder, cage, grating, platforms, structural members, railing, chequered plates, CO2 piping & nozzles, electrical conduit & fittings, limit switches, junction boxes, light fixtures, switches, cables, gaskets, fasteners, foundation items etc.) shall be individually wrapped with minimum **3 – Layer Wrapping**.

2) Wall panels, door panels, roof panels, ladder, cage, grating, platforms, structural members etc. shall be packed in **Steel Crate Packing**. Panels shall be **stacked vertically** in the steel crates.

3) Panels, structural members should not protrude outside the steel crates.

4) Dampers, ducts, rain hood, railing, CO2 piping & nozzles, electrical conduit & fittings, limit switches, junction boxes, light fixtures, switches, cables, gaskets, fasteners, foundation items etc. shall be packed in **Closed Packing Case**.

5) Stainless steel material like CO2 latch, tube & fittings etc. shall be packed in separate packing case.

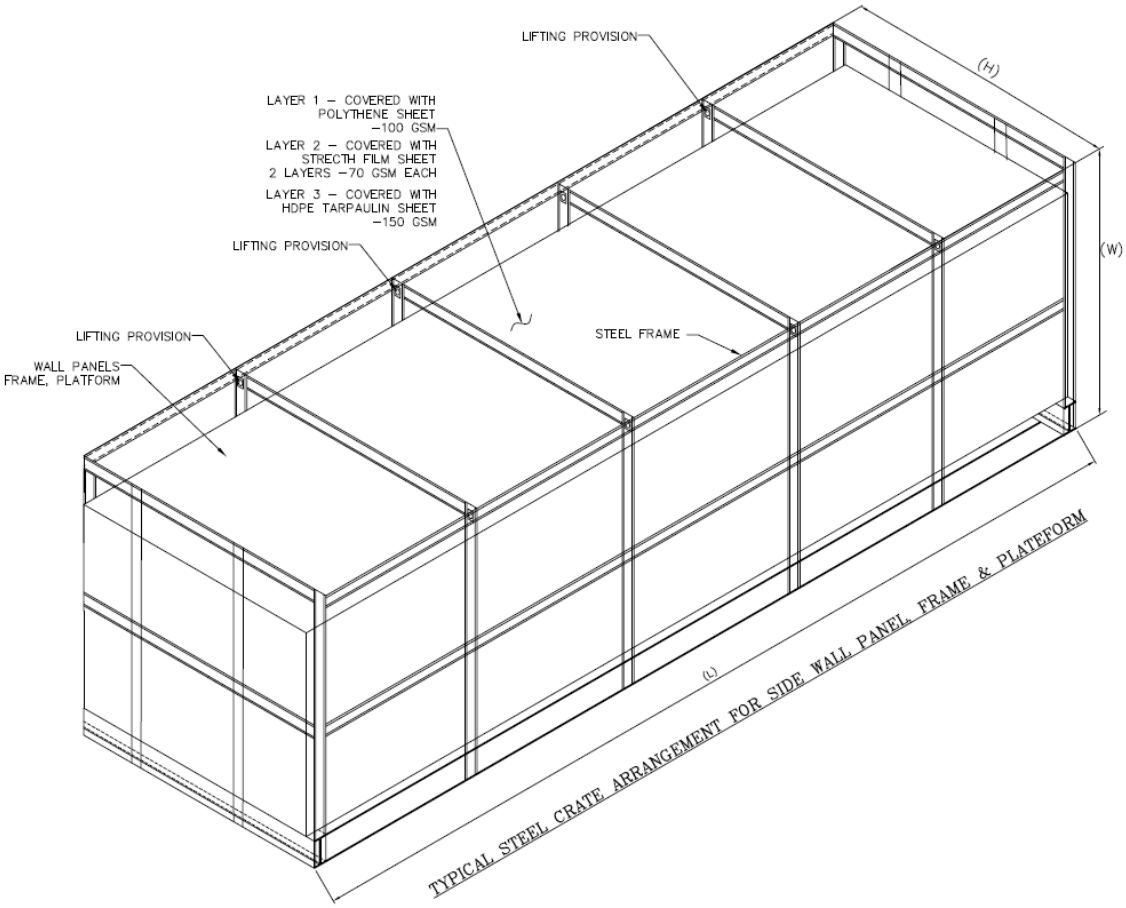

RESTRICTED USE
Apr Sat 8 12:51 2017
Printed by : KRANTHI KUMAR CH-FME3041 / 6146368-TR1 on 03-04-19 10:54:00
This Drawing is printed from Engineering Digital Archive System (EDAS)
Intellectual rights are not assigned to the user.

COPYRIGHT AND CONFIDENTIAL
The information on this document is the property of BHARAT HEAVY ELECTRICALS LIMITED.
It must not be used directly or indirectly in any way detrimental to the interest of the company.

7.0 **Exhaust duct & Bypass stack**

1) All the flange openings on the plenum extension covers, horizontal ducts, silencer duct, elbow duct, transition duct etc. shall be closed with 12 mm thick plywood sheet and the edges shall be sealed with GI sheet.

2) All the components (plenum extension covers, horizontal ducts, vertical ducts, silencer duct, silencer panels, elbow duct, transition ducts, expansion joints, structural members, platforms, ladders, hand railing, junction box, aviation lamp, lightening arrester, cabling, GI strip, gaskets, fasteners, foundation plates & bolts etc.) shall be individually wrapped with minimum **3 – Layer Wrapping**.

Layer 1 - Polythene sheet of 100 GSM

Layer 2 - Two layers of stretch film sheet of 70 GSM (each)

RESTRICTED USE
Apr Sat 8 12:51 2017
Printed by : KRANTHI KUMAR CH-FME3041 / 6146368-TR1 on 03-04-19 10:54:00
This Drawing is printed from Engineering Digital Archive System (EDAS)
Date/Time Stamps are not Legal Proof.

COPYRIGHT AND CONFIDENTIAL
The information on this document is the property of BHARAT HEAVY ELECTRICALS LIMITED.
It must not be used directly or indirectly in any way detrimental to the interest of the company.

Layer 3 - HDPE Tarpaulin sheet of 150 GSM

3) Silencer panels, expansion joints, structural members etc. shall be packed in **Steel Crate Packing**. Silencer panels shall be **stacked vertically** in the steel crates.
4) Structural members should not protrude outside the steel crates.
5) Hand railing, junction box, aviation lamp, lightening arrester, cabling, GI strip, gaskets, fasteners, foundation plates & bolts etc. shall be packed in **Closed Packing Case**.
6) Stainless steel material like bleed heat piping, trash screen etc. shall be packed in separate packing case.

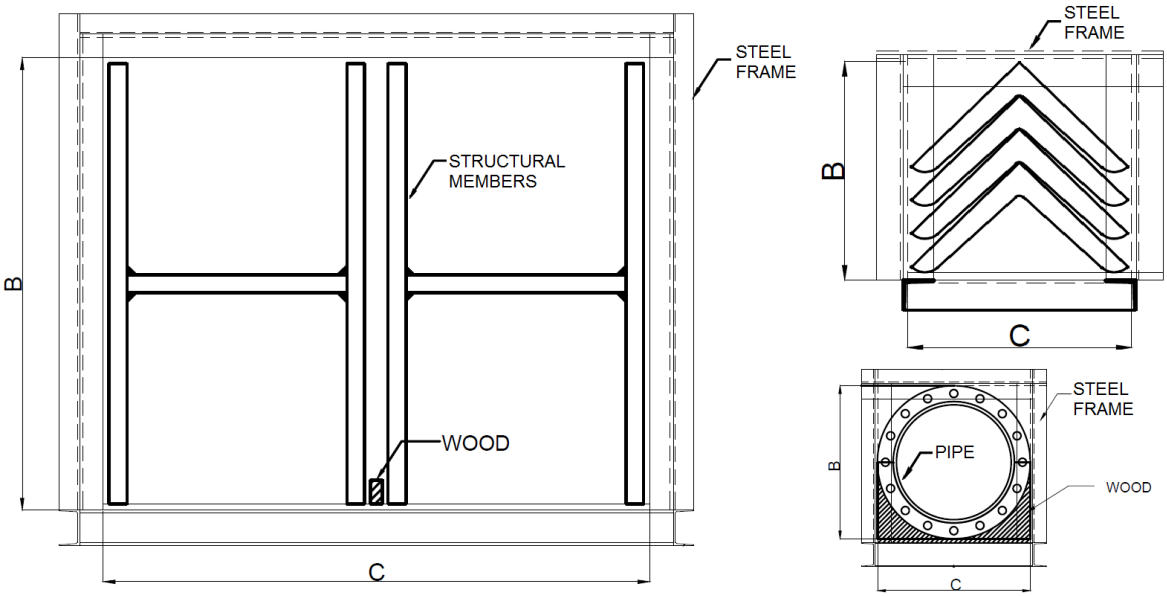

RESTRICTED USE
Apr Sat 8 12:51 2017
Printed by : KRANTHI KUMAR CH-FME3041 / 6146368-TR1 on 03-04-19 10:54:00
This Drawing is printed from Engineering Digital Archive System (EDAS)
Intellectual rights are not assigned to the print.

COPYRIGHT AND CONFIDENTIAL
The information on this document is the property of BHARAT HEAVY ELECTRICALS LIMITED.
It must not be used directly or indirectly in any way detrimental to the interest of the company.

8.0 **Exhaust frame blower**

1) All the flange openings on the blower shall be closed with 10mm thick plywood sheet and the edges shall be sealed with GI sheet.
2) Blower & drive motor assembly and all other components (dampers, transition duct, silencer, rain hoods, supports, gaskets; fasteners, foundation bolts etc.) shall be individually wrapped with minimum **3 – Layer Wrapping**.
3) All the components including blower & drive motor assembly shall be packed in **Closed Packing Case**.
4) Blower & drive motor assembly shall be rigidly fixed to the bottom of the packing case with screws. Adequate battens lined with HDPE Tarpaulin 150 GSM and rubber sheet shall be provided around the fan assembly to arrest the movement.
5) The packing of blower and drive motor must be designed to sustain transportation and handling effect loads of up to 2g.
6) Adequate wooden pieces and rubber sheets shall be provided between the components, around sharp corners & edges to prevent damage.

9.0 **Diverter Damper**

1) All the flange openings on the Diverter damper shall be closed with 12 mm thick plywood sheet and the edges shall be sealed with GI sheet.
2) All the components (Diverter damper casing, blade, flap arm, shafts, tie rods, toggle arm, drive assembly, gear boxes, valves, actuators, flap pivot, seals, bearings, insulation, cladding sheet, butterfly damper, seal air fans, piping, expansion bellow, support legs, brackets, junction boxes, limit switches, pressure switch, position transmitter, gaskets, fasteners, foundation plates & bolts etc.) shall be individually wrapped with minimum **3 – Layer Wrapping**.
3) Components like flap arm, shafts, tie rods, gear boxes, drive assembly, connecting rods, toggle arm, valves, actuators, flap pivot, seals, bearings, insulation, cladding sheet, hand railing, butterfly damper, seal air fans, piping, expansion bellow, support legs, brackets, junction boxes, limit switches, pressure switch, position transmitter, gaskets, fasteners, foundation plates & bolts etc. shall be packed in **Closed Packing Case**.
4) Adequate quantity of thermo coal shall be provided all around the control panel and electronic items packing.
5) Diverter casing, damper blade, shaft and drive units shall be packed in **Steel Crate Packing**.
6) The packing of drive assembly, actuators, gear boxes etc. must be designed to sustain transportation and handling effect loads of up to 2g.
7) Stainless steel material shall be packed in separate packing case.
8) Adequate wooden pieces and rubber sheets shall be provided between the components, around sharp corners & edges to prevent damage.

RESTRICTED USE
Apr Sat 8 12:51 2017
Printed by : KRANTHI KUMAR CH-FME3041 / 6146368-TR1 on 03-04-19 10:54:00
This Drawing is printed from Engineering Digital Archive System (EDAS)
Intellectual rights are not transmitted to you.

COPYRIGHT AND CONFIDENTIAL
The information on this document is the property of BHARAT HEAVY ELECTRICALS LIMITED.
It must not be used directly or indirectly in any way detrimental to the interest of the company.

10.0 **Guillotine Damper**

1) All the flange openings on the Guillotine damper shall be closed with 12 mm thick plywood sheet and the edges shall be sealed with GI sheet.
2) All the components (Guillotine damper frame, blade, rack, shaft, sprocket, rack enclosure, drive assembly, gear box, shut off valve, actuators, flap pivot, seals, bearings, insulation, cladding sheet, butterfly damper, seal air fans, piping, expansion bellow, support legs, brackets, junction boxes, limit switches, pressure switch, position transmitter, gaskets, fasteners, foundation plates & bolts etc.) shall be individually wrapped with minimum **3 – Layer Wrapping**.
3) Components like flap arm, shafts, tie rods, gear boxes, drive assembly, connecting rods, toggle arm, shut off valve, actuators, flap pivot, seals, bearings, insulation, cladding sheet, hand railing, butterfly damper, seal air fans, piping, expansion bellow, support legs, brackets, junction boxes, limit switches, pressure switch, position transmitter, gaskets, fasteners, foundation plates & bolts etc. shall be packed in **Closed Packing Case**.
4) Adequate quantity of thermo coal shall be provided all around the control panel and electronic items packing.
5) Guillotine damper casing, damper blade, shafts and drive units shall be packed in **Steel Crate Packing**.
6) The packing of drive assembly, actuators, gear boxes etc. must be designed to sustain transportation and handling effect loads of up to 2g.
7) Stainless steel material shall be packed in separate packing case.
8) Adequate wooden pieces and rubber sheets shall be provided between the components, around sharp corners & edges to prevent damage.

11.0 **Inlet Air filter**

1) All the components (Filter modules, roof panels, air cooler modules, transition duct, Inlet hood, Filter elements, filter pads, hoist, Hooper, control panel, electronic items, cable, piping, valves, support structure, platforms, railing, staircase, fasteners, foundation bolt etc.) shall be individually wrapped with minimum **3 – Layer Wrapping**.
2) Filter elements, filter pads, electronic items, control panel shall be packed in **non-refundable shipping containers**.
3) Adequate quantity of thermo coal shall be provided all around the control panel and electronic items packing.
4) All other components (Filter modules, roof panels, air cooler modules, Inlet hood, hoist, Hooper, cables, piping, valves, support structure, platforms, railing, staircase, fasteners, foundation bolt etc.) shall be packed in **Closed Packing Case**.
5) Flange openings of the ducts shall be closed with 12 mm thick plywood sheet and the edges shall be sealed with GI sheet.
6) Stainless steel material shall be packed in separate packing case.
7) Adequate wooden pieces and rubber sheets shall be provided between the components, around sharp corners & edges to prevent damage.

RESTRICTED USE
Apr Sat 6 12:51 2017
Printed by : KRANTHI KUMAR CH-FME3041 / 6146368-TR1 on 03-04-19 10:54:00
This Drawing is printed from Engineering Digital Archive System (EDAS)
Intellectual rights are not assigned to the print.

COPYRIGHT AND CONFIDENTIAL
The information on this document is the property of BHARAT HEAVY ELECTRICALS LIMITED.
It must not be used directly or indirectly in any way detrimental to the interest of the company.

12.0 **CO2 fire fighting system**

1) All the components (CO2 cylinder container, CO2 cylinders, solenoid valve, hoses, NRVs, SRVs, CO2 enclosure, lockout valves, AC indoor & outdoor units, control panel, battery and battery charger, junction boxes, hooters, EPBs, strobe lights, pressure switch, battery, glands, EOL Resister, limit switch, electronic modules, online weighing device, directional valve, CO2 nozzles etc.) shall be individually wrapped with minimum **3 – Layer Wrapping**. Wrapping near the valve part of the CO2 cylinder shall be avoided.

2) Except CO2 cylinder container & CO2 cylinders, all other components like solenoid valve, hoses, NRVs, SRVs, CO2 enclosure, lockout valves, AC indoor & outdoor units, control panel, battery and battery charger, junction boxes, hooters, EPBs, strobe lights, pressure switch, battery, glands, EOL Resister, limit switch, electronic modules, online weighing device, directional valve, CO2 nozzles etc. shall be packed in **Closed Packing Case**. Adequate quantity of thermo coal shall be provided all around the control panel and electronic items packing.

3) CO2 cylinder container shall be packed in **Steel Crate Packing**.

4) CO2 cylinders shall be packed in steel crate covered by wooden plank of 200 mm width on all sides. Adequate rubber sheets shall be provided between the cylinders and between cylinders & steel crate to protect the cylinder surface.

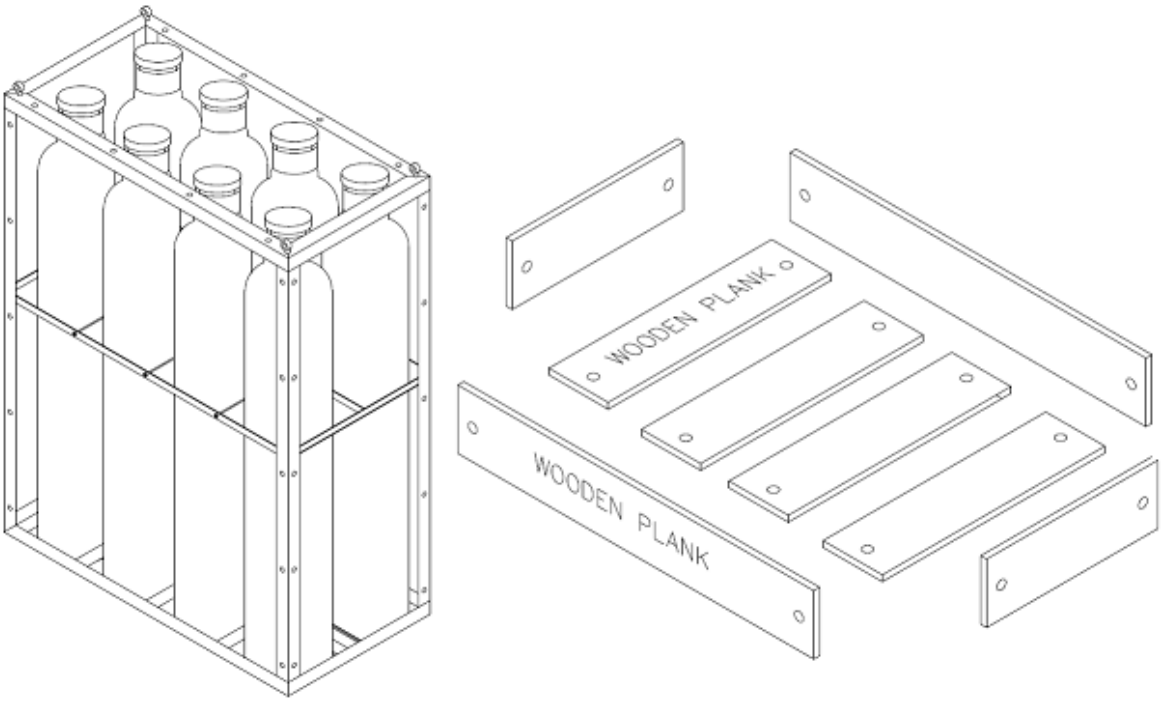

5) Stainless steel material shall be packed in separate packing case.

6) Adequate wooden pieces and rubber sheets shall be provided between the components, around sharp corners & edges to prevent damage.

RESTRICTED USE
Apr Sat 8 12:51 2017
Printed by : KRANTHI KUMAR CH-FME3041 / 6146368-TR1 on 03-04-19 10:54:00
This Drawing is printed from Engineering Digital Archive System (EDAS)
Intellectual rights are not assigned to the print.

COPYRIGHT AND CONFIDENTIAL
The information on this document is the property of BHARAT HEAVY ELECTRICALS LIMITED.
It must not be used directly or indirectly in any way detrimental to the interest of the company.

13.0 **Oil Mist eliminator**

1) Mist eliminator unit and other loose items shall be individually wrapped with minimum **3 – Layer Wrapping**.
2) Mist eliminator unit and other loose items shall be packed in **Closed Packing Case**.

14.0 **Air processing unit / Air dryer unit.**

1) Air processing unit and other loose items shall be individually wrapped with minimum **3 – Layer Wrapping**.
2) Air processing unit and other loose items shall be packed in **Closed Packing Case**.

15.0 **Fin tube cooler**

1) Fin tube cooler unit and other loose items shall be individually wrapped with minimum **3 – Layer Wrapping**.
2) Fin tube cooler unit and other loose items shall be packed in **Closed Packing Case**.

16.0 **Portable lube oil drain pump**

1) Portable drain pump unit and other loose items shall be individually wrapped with minimum **3 – Layer Wrapping**.
2) Portable drain pump unit and other loose items shall be packed in **Closed Packing Case**.

17.0 **Lube oil centrifuge**

1) Lube oil centrifuge unit and other loose items shall be individually wrapped with minimum **3 – Layer Wrapping**.
2) Lube oil centrifuge unit and other loose items shall be packed in **Closed Packing Case**.

18.0 **Compressor water wash skid**

1) Water wash skid, foundation and other loose items shall be individually wrapped with minimum **3 – Layer Wrapping**.
2) Foundation and other loose items shall be packed in **Closed Packing Case**.

19.0 **Forced feed lube oil system**

1) Forced feed lube oil system and other loose items shall be individually wrapped with minimum **3 – Layer Wrapping**.
2) Foundation and other loose items shall be packed in **Closed Packing Case**.

RESTRICTED USE
Apr Sat 8 12:51 2017
Printed by : KRANTHI KUMAR CH-FME3041 / 6146368-TR1 on 03-04-19 10:54:00
This Drawing is printed from Engineering Digital Archive System (EDAS)
Intellectual rights are not transferred to the recipient.

PRODUCT STANDARD

HYDERABAD

RECORD OF REVISIONS

Rev. No.	Date	Revision Details	Revised	Approved
00	24.07.13	First Made	-	-
01	24.10.15	Clause 19.0 added.	VSH	ECS

COPYRIGHT AND CONFIDENTIAL
The information on this document is the property of BHARAT HEAVY ELECTRICALS LIMITED.
It must not be used directly or indirectly in any way detrimental to the interest of the company.

Ref. Doc

RESTRICTED USE
Apr Sat 8 12:51 2017
Printed by : KRANTHI KUMAR CH-FME3041 / 6146368-TR1 on 03-04-19 10:54:00
This Drawing is printed from Engineering Digital Archive System (EDAS)
Intellectual rights are not assigned to the user.