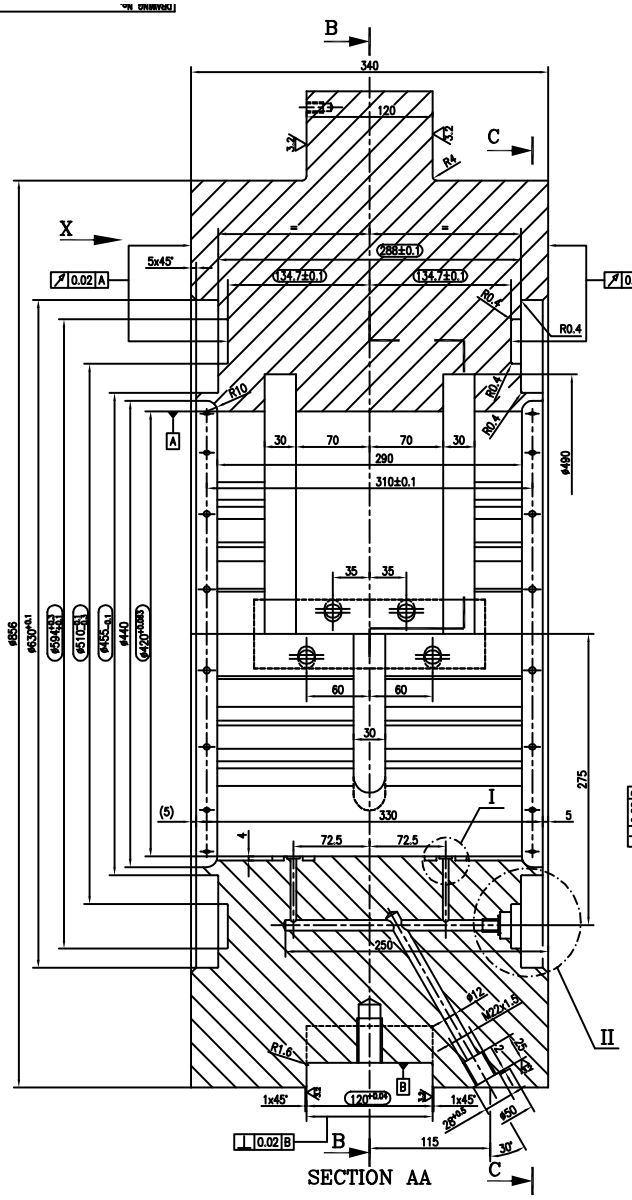

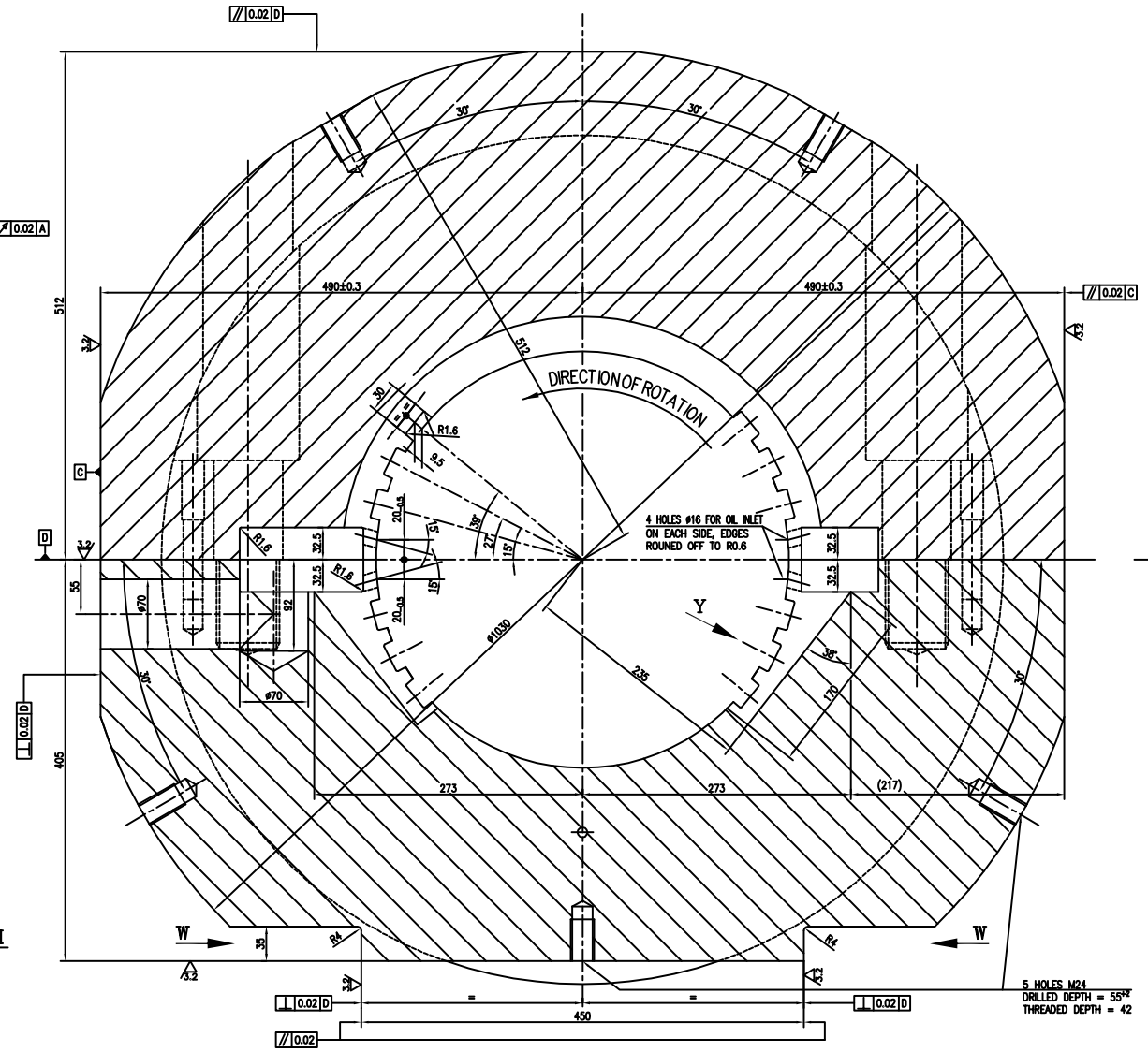

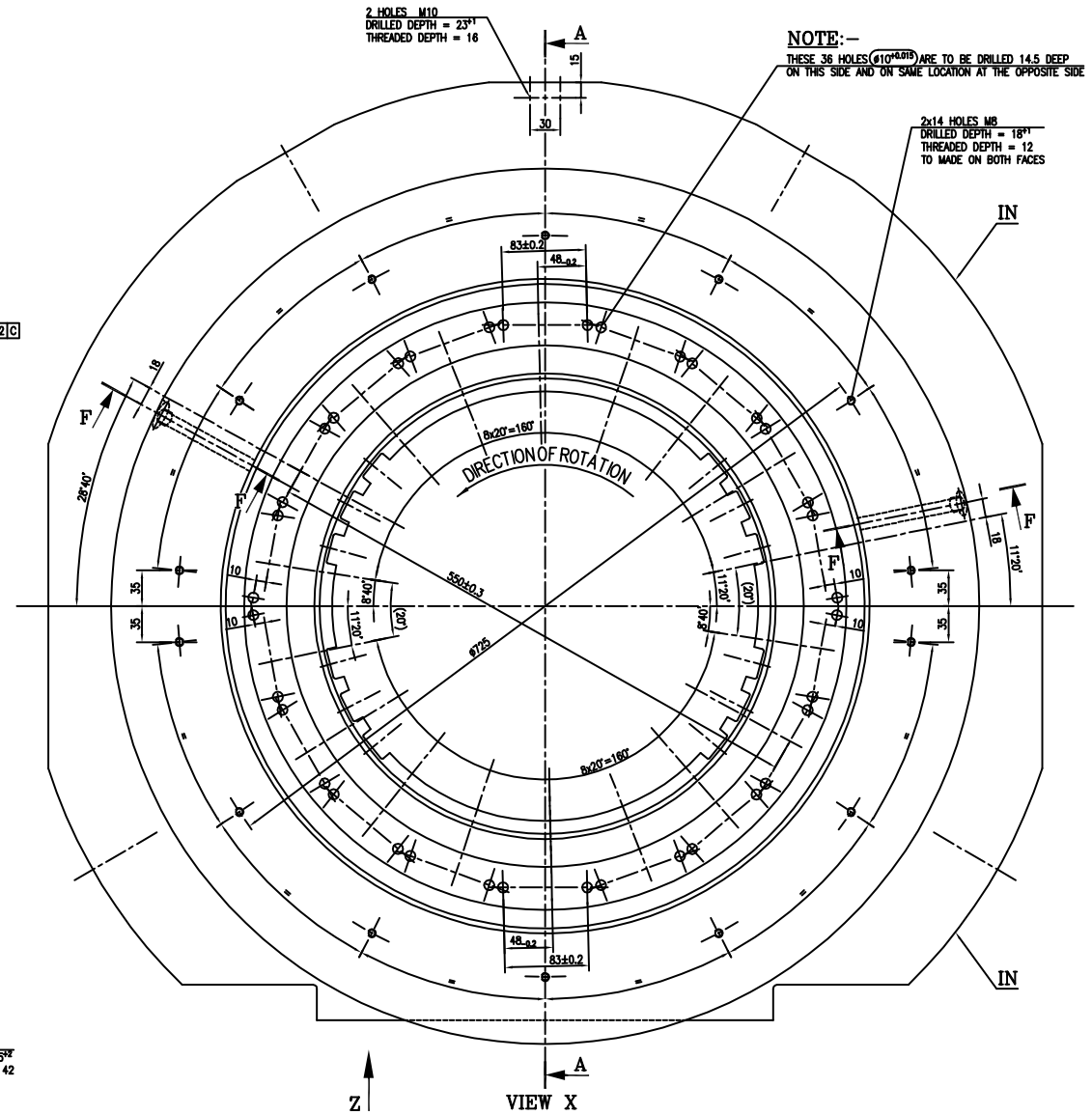

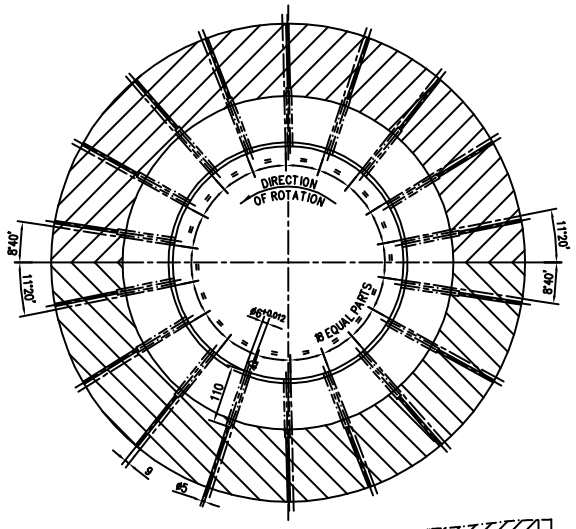

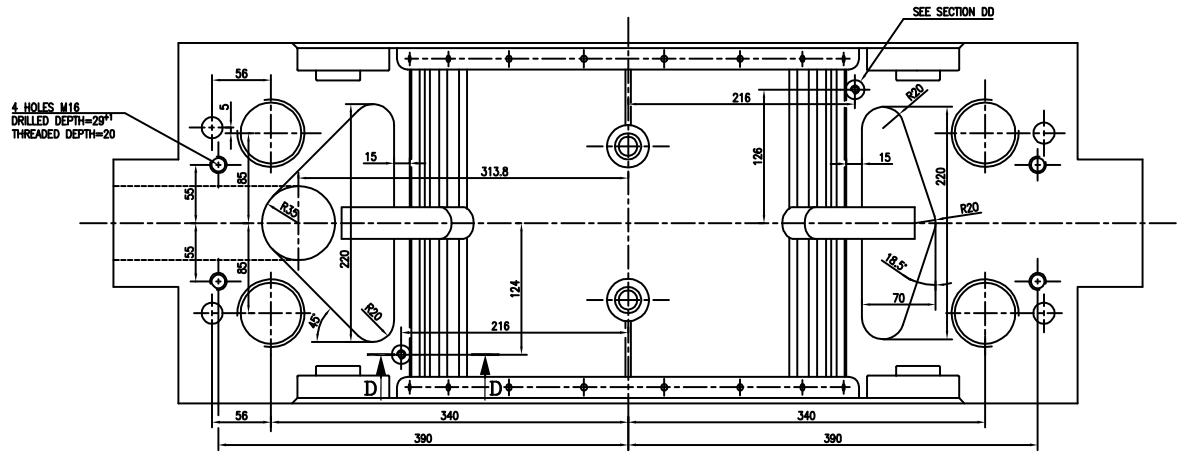

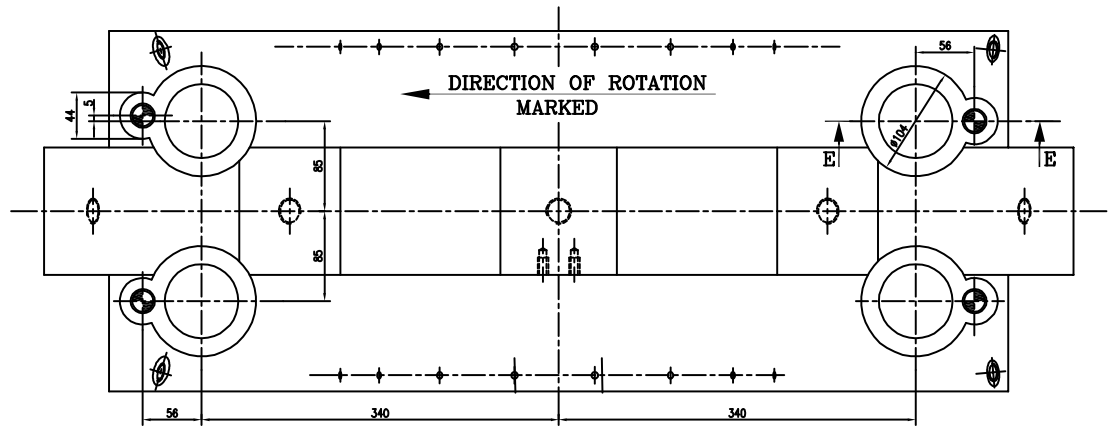

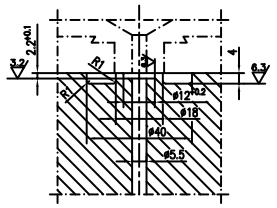

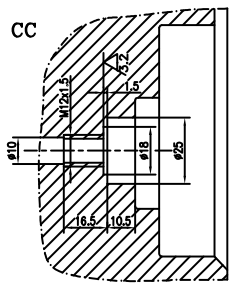

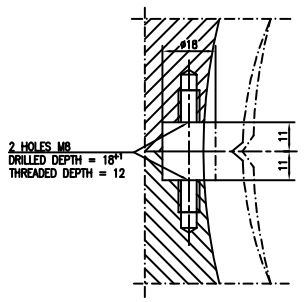

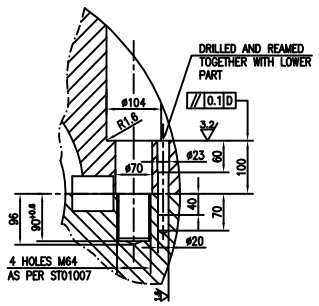

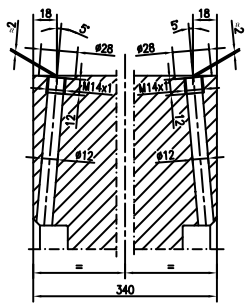

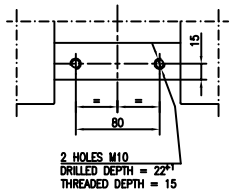

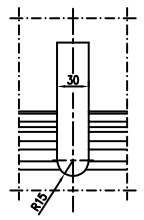

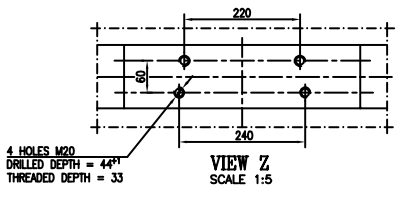

TECHNICAL REQUIREMENTS :

1. COLOUR MATCH JOINT (PARTING) PLANE AS PER HW0992017 PRIOR TO MACHINING OF BORE OF BEARING SHELL TO ACHIEVE 70% SURFACE CONTACT AND PARTING PLANE GAP LESS THAN 0.03 mm (30 MICRONS).
2. DIMENSIONS/CLEARANCE INDICATED IN ▭ AND ALL THE GEOMETRICAL TOLERANCES ARE CRITICAL TO QUALITY(CTQ).
3. DIMENSIONS IN ( ) ARE FOR REFERENCE ONLY.
4. IDENTIFICATION ACCORDING TO HW04000397 AT THE PLACES MARKED WITH IN.

GRADE OF UNTOL. DIM	-SMS-No./ C.B.O.M 01170327000			STATUS OF DRG	TYPE OF PRODUCT OR NAME OF CUSTOMER/PROJECT: STEAM TURBINE
M/CG.- AA0230208 m	PROJECT DEPT	NAME	SIGN	DATE	
WELDING-CLASS 'B' OF AA0621104	STT	N.SINGH	SD/-	18.06.94	BHARAT HEAVY ELECTRICALS LTD. RANIPUR, HARIDWAR
GAS CUTTING-TABLE 3 OF AA0621101	MTE	CBS	SD/-	08.02.94	

REV	DATE	ALTERED	REV	DATE	ALTERED
		CHECKED			CHECKED

REV	DATE	ALTERED	CHECKED
03	18.02.05	DELIGHT	SD/-
			ANG SD/-

CHANGES MADE AS PER C/A. DRG. SUPERSEDED UNDER SAME NUMBER AND SUBMITTED ON SERVER.
C/A NO. STE-05-F0030

	NAME	SIGN	DATE	NO. OF VAR
DRN	DELIGHT	sd/-	05.09.05	—
CHD	A.K.GOEL	sd/-	15.02.06	—
APPD	A.K.JAIN	sd/-	17.02.06	—

DEPT	SCALE	WEIGHT (KG)	REF. TO ASSY. DRG.	ITEM No.	NO. OF ITEMS
STE	1:2.5	1226	0-11703-27100	—	—
CODE 4011					

TITLE : BEARING SHELL IN TWO HALVES

CARD CODE

DRAWING NO. 0-11703-27101 — 22 23 24

SHEET No. 01 No. OF SHEETS 01

A0 SIZE

7404-16205/001

COPYRIGHT AND CONFIDENTIAL
THE INFORMATION ON THIS DOCUMENT IS THE PROPERTY OF BHARAT HEAVY ELECTRICALS LIMITED.
IT MUST NOT BE USED DIRECTLY OR INDIRECTLY IN ANY WAY DETRIMENTAL TO THE INTEREST OF THE COMPANY.