FIRST ANGLE PROJECTION

(ALL DIMENSIONS ARE IN mm)

REV.	DATE	ALTERED	REV.	DATE	ALTERED	ADDITIONAL INFORMATION
		CHECKED	03	03.04.03	CHECKED	STATUS OF DRAWING: B
			DRG. REDRAWN. (DCA 12281)			DISTRIBUTION OF PRINTS: O/C-1 SWM-3 TCX-1

THE INFORMATION ON THIS DOCUMENT IS THE PROPERTY OF BHARAT HEAVY ELECTRICALS LIMITED.
IT MUST NOT BE USED DIRECTLY OR INDIRECTLY IN ANY WAY DETRIMENTAL TO THE INTEREST OF THE COMPANY.

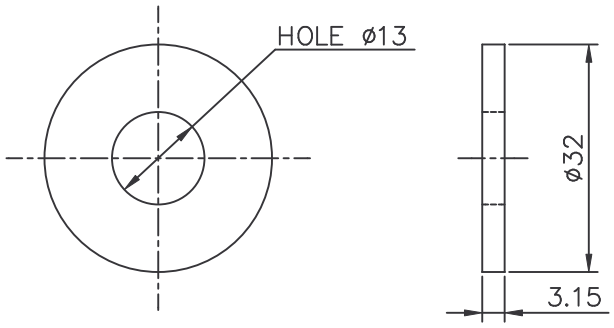

ITEM 001

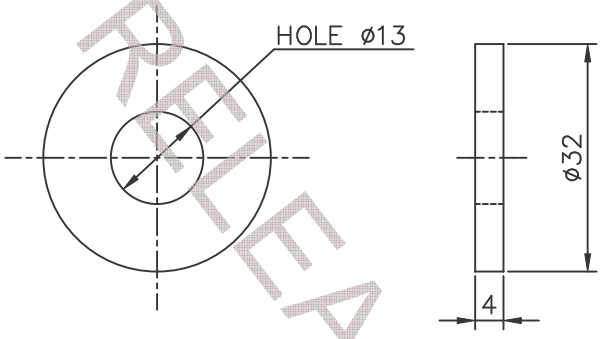

ITEM 002

RELEASED

FINISH: –
FOR ITEM 001 – ZINC PLATE & PASSIVATE
TO AA 0673603 & AA 0673604 (013 TK.)

REMARKS	ITEM NO.	DESCRIPTION	STD.	MATL. CODE / MATL. SPECN	A-C	UNITS	UNIT WT. / QTY.
ST926842	002	4 TK. x 32 x 32 S.S. SHEET		AA 10739		KG.	– / 001
BP 9099268360	001	3.15 TK. x 32 x 32 H.R.S. SHEET		AA 1011713136 / AA 10113		KG.	0.020 / 001

REF. DRG. No. 4509630152 1-R03-S01

SIGN & DATE

	NAME	SIGN.	DATE	NO.OF VAR
DRN	D.P.K.	Sd/–	15.02.85	
CHD	G.M.K.	Sd/–	17.03.85	
APPD	S.M./R.K.J.	Sd/–	17.03.85	–

BHATAT HEAVY ELECTRICALS LIMITED
BHOPAL

DEPT.	UN. TOL.DIM.GR.	SCALE	WEIGHT (Kg.)	REF. TO ASSY. DRG.	ITEM NO.	NO.OF ITEMS
SWE / CODE 409	M / AA 0230208	1:1		15096301507	020	001

TITLE: WASHER

DRAWING No. 4 509 63 01521 REV. 03

SHEET NO. 01 NO.OF SHEETS 01

INVENTORY No.

SIZE A4