FIRST ANGLE PROJECTION

(ALL DIMENSIONS ARE IN mm)

REV.	DATE	ALTERED	REV.	DATE	ALTERED	ADDITIONAL INFORMATION
		CHECKED	04	30.08.03	CHECKED H.R.P.	STATUS OF DRAWING: B
			DRAWING REDRAWN (DCA 12539)			DISTRIBUTION OF PRINTS: O/C-1 SWM-3 TCX-1

THE INFORMATION ON THIS DOCUMENT IS THE PROPERTY OF BHARAT HEAVY ELECTRICALS LIMITED.
IT MUST NOT BE USED DIRECTLY OR INDIRECTLY IN ANY WAY DETRIMENTAL TO THE INTEREST OF THE COMPANY.

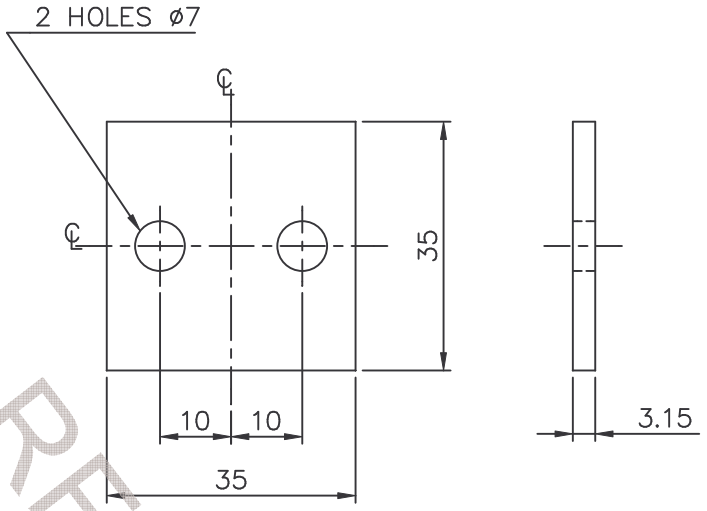

ITEM 001 & 002

RELEASED

FINISH: –

ZINC PLATE & PASSIVATE TO AA 0673603 & AA 0673604 (0.015 TK.)

REMARKS	ITEM NO.	DESCRIPTION	STD.	MATL. CODE / MATL. SPECN	A-C	UNITS	UNIT WT. / QTY.
	002	3.15 TK. x 35 x 35 LG. STAINLESS ST. SHEET		AA 1071739131 / AA 10739		KG.	0.028 / 001
	001	3.15 TK. x 35 x 35 LG. H.R.S. SHEET		AA 1011713136 / AA 10113		KG.	0.028 / 001

REF. DRG. No. 45211001708-R04-S01

SIGN & DATE

	NAME	SIGN.	DATE	NO.OF VAR
DRN	R.R.G.	Sd/–	04.11.86	
CHD	–		–	
APPD	R.K.G.	Sd/–	06.11.86	–

BHATAT HEAVY ELECTRICALS LIMITED
BHOPAL

DEPT.	UN. TOL.DIM.GR.	SCALE	WEIGHT (Kg.)	REF. TO ASSY. DRG.	ITEM NO.	NO.OF ITEMS
SWE	M	1:1		15211001523	023	002
CODE 409	AA 0230208					

TITLE: STOPPER PLATE

DRAWING No. 4 521 10 01708 REV. 04

SHEET NO. 01 NO.OF SHEETS 01

INVENTORY No.

SIZE A4