SECTION: I

SUB-SECTION: C-3

TECHNICAL SPECIFICATION (ELECTRICAL PORTION)

KORBA STPP STAGE- I, II & III
(3X200MW + 3X500MW + 1X500MW)

TECHNICAL SPECIFICATION

LIME DOSING SYSTEM (ELECTRICAL PORTION)

BHARAT HEAVY ELECTRICALS LIMITED

POWER SECTOR

PROJECT ENGINEERING MANAGEMENT

NOIDA, UP [INDIA]

	TITLE : ELECTRICAL EQUIPMENT SPECIFICATION FOR LIME DOSING SYSTEM KORBA STPP, STAGE- I, II & III	SPECIFICATION NO.
		VOLUME NO. :
		SECTION :
		REV NO. **00** : DATE : 23.05.2020
		SHEET : 1 OF 1

CONTENTS

Sr. NO.	TITLE	NO. OF SHEETS
1	TITLE SHEET	1
2	CONTENT SHEET	1
3	SPECIFIC TECHNICAL REQUIREMENTS	3
4	ELECTRICAL SCOPE BETWEEN BHEL AND VENDOR	2
5	NTPC TECHNICAL SPECIFICATION FOR MOTORS	10
6	STANDARD SPECIFICATION FOR LV MOTORS	5
7	NTPC TECHNICAL SPECIFICATION FOR CABLING	13
8	QUALITY PLAN FOR MOTORS	12
9	NTPC QUALITY PLAN	2
10	MOTOR DATASHEET A AND C (ANNEXURE-I)	6
11	ELECTRICAL LOAD DATA FORMAT (ANNEXURE-II)	1
12	CABLE SCHEDULE FORMAT (ANNEXURE-III)	1
13	TYPICAL DETAILS FOR CABLE TRAY AND ACCESSORIES (ANNEXURE-IV)	2

`

BHEL	TITLE : ELECTRICAL EQUIPMENT SPECIFICATION FOR LIME DOSING/FEEDING SYSTEM KORBA STPP, STAGE-I,II & III	SPECIFICATION NO. VOLUME NO. : SECTION : REV NO. **00** : DATE : 23.05.2020 SHEET : 1 OF 3

TECHNICAL SPECIFICATION

FOR

LIME DOSING/FEEDING SYSTEM (ELECTRICAL PORTION)

1.0 **EQUIPMENT & SERVICES TO BE PROVIDED BY BIDDER:**

a) Services and equipment as per "Electrical Scope between BHEL and Vendor".

b) Any item/work either supply of equipment or erection material which have not been specifically mentioned but are necessary to complete the work for trouble free and efficient operation of the plant shall be deemed to be included within the scope of this specification. The same shall be provided by the bidder without any extra charge.

c) Supply of mandatory spares as specified in the specifications of mechanical equipments.

d) Electrical load requirement for LIME DOSING/FEEDING SYSTEM **.**

e) All equipment shall be suitable for the power supply fault levels and other climatic conditions mentioned in the enclosed project information.

f) Bidder to furnish list of makes for each equipment at contract stage, which shall be subject to customer/BHEL approval without any commercial and delivery implications to BHEL

g) Various drawings, data sheets as per required format, Quality plans, calculations, test reports, test certificates, operation and maintenance manuals etc shall be furnished as specified at contract stage. All documents shall be subject to customer/BHEL approval without any commercial implication to BHEL.

h) Motor shall meet minimum requirement of motor specification.

i) Vendor to clearly indicate equipment locations and local routing lengths in their cable listing furnished to BHEL.

j) Cable BOQ worked out based on routing of cable listing provided by the vendor for " both end equipment in vendor's scope"shall be binding to the vendor with +10 % margin to take care of slight variation in routing length & wastages.

2.0 **EQUIPMENT & SERVICES TO BE PROVIDED BY PURCHASER FOR ELECTRICAL & TERMINAL POINTS:**

Refer "Electrical Scope between BHEL and Vendor".

3.0 DOCUMENTS TO BE SUBMITTED ALONG WITH BID

3.1 The electrical specification without any deviation from the technical/quality assurance requirements stipulated shall be deemed to be complied by the bidder in case bidder

furnishes the overall compliance of package technical specification in the form of compliance certificate/No deviation certificate.

3.2 No technical submittal such as copies of data sheets, drawings, write-up, quality plans, type test certificates, technical literature, etc, is required during tender stage. Any such submission even if made, shall not be considered as part of offer.

4.0 List of enclosures :

a) Electrical scope between BHEL & vendor

b) Customer (NTPC) specification for Motors

c) Customer (NTPC) cabling spec (to be referred by vendor for their scope of work as per Electrical scope between BHEL & vendor).

d) Quality plan for motors & NTPC quality plan.

e) Datasheet A and C for LT Motors (Annexure-I)

f) Electrical Load data format (Annexure –II)

g) BHEL cable listing format (Annexure –III)

h) Typical details for Cable Tray and accessories(Annexure-IV)

REV-0, DATE: 23.05.2020

ELECTRICAL SCOPE BETWEEN BHEL AND VENDOR

PACKAGES: LIME DOSING/FEEDING SYSTEM
SCOPE OF VENDOR: SUPPLY & SUPERVISION OF ERECTION AND COMMISSIONING BY VENDOR
PROJECT: KORBA STPP STAGE-I,II & III

S.NO	DETAILS	SCOPE SUPPLY	SCOPE E&C	REMARKS
1	415 V Switchgear	BHEL	BHEL	For all LT motor & Auxiliary supply, 415 V AC (3 ph. 4 wire)/240 V AC (supply feeder) shall be provided by BHEL based on load data provided by vendor at contract stage for all equipment supplied by vendor as part of contract. Any other voltage level (AC/DC) required will be derived by the vendor.
2	Local Push Button Station (for motors)	BHEL	BHEL	Located near the motor.
3	Power cables, control cables and screened control cables for a) both end equipment in BHEL's scope b) both end equipment in vendor's scope c) one end equipment in vendor's scope	 BHEL BHEL BHEL	 BHEL BHEL BHEL	1. For 3.b) & c): Sizes of cables required shall be informed by vendor at contract stage (based on inputs provided by BHEL) in the form of cable listing. Finalisation of cable sizes shall be done by BHEL. Vendor shall provide lugs & glands accordingly. 2. Termination at BHEL equipment terminals by BHEL. 3. Termination at Vendor equipment terminals by Vendor.
4	Junction box for control & instrumentation cable	Vendor	BHEL	Number of Junction Boxes shall be sufficient and positioned in the field to minimize local cabling (max 10-12 mtrs) and trunk cable.
5	Any special type of cable like compensating, co-axial, prefab, MICC etc.	Vendor	BHEL	
6	Cable trays, accessories & cable trays supporting system 100/ 50 mm cable trays/ Conduits/ Galvanised steel cable troughs for local cabling	BHEL Vendor	BHEL BHEL	Local cabling from nearby main route cable tray (BHEL scope) to equipment terminal (vendor's scope) shall be through 100/ 50 mm. cable trays/ conduits/ Galvanised steel cable troughs, as per approved layout drawing during contract stage.
7	a. Cable glands b. Lugs and bimetallic strip for equipment supplied by Vendor	Vendor Vendor	BHEL BHEL	a. Double compression Ni-Cr plated brass cable glands b. Solder less crimping type heavy duty tinned copper lugs for power and control cables.
8	Conduit and conduit accessories for cabling between equipment supplied by vendor	Vendor	BHEL	Conduits shall be medium duty, hot dip galvanised cold rolled mild steel rigid conduit as per IS: 9537.
9	Lighting	BHEL	BHEL	

REV-0, DATE: 23.05.2020

ELECTRICAL SCOPE BETWEEN BHEL AND VENDOR

PACKAGES: LIME DOSING/FEEDING SYSTEM
SCOPE OF VENDOR: SUPPLY & SUPERVISION OF ERECTION AND COMMISSIONING BY VENDOR
PROJECT: KORBA STPP STAGE-I,II & III

10	Equipment grounding (including electronic earthing) & lightning protection	BHEL	BHEL	
11	Below grade grounding	BHEL	BHEL	
12	LT Motors with base plate and foundation hardware.	Vendor	BHEL	Makes shall be subject to customer/ BHEL approval at contract stage.
13	Mandatory spares	Vendor	-	Vendor to quote as per specification.
14	Recommended O & M spares	Vendor	-	As specified elsewhere in specification
15	Any other equipment/ material/ service required for completeness of system based on system offered by the vendor (to ensure trouble free and efficient operation of the system).	Vendor	BHEL	
16	a) Input cable schedules (Control & Screened Control Cables) b) Cable interconnection details for above c) Cable block diagram	Vendor Vendor Vendor	- - -	Cable listing for Control and Instrumentation Cable and electronic earthing cable in enclosed excel format shall be submitted by vendor during detailed engineering stage.
17	Electrical Equipment & cable tray layout drawings	-	-	Vendor to furnish drawing (both in print form as well as in AUTOCAD) of Lime Dosing/Feeding Building layout clearly indicating all motors, panels, JB's etc. which require cabling along with their terminal box/location/ Foundation etc.
18	Electrical Equipment GA drawing	Vendor	-	For necessary interface review.

NOTES:

1. Make of all electrical equipment/ items supplied shall be reputed make & shall be subject to approval of BHEL/customer after award of contract.
2. All QPs shall be subject to approval of BHEL/customer after award of contract without any commercial implication.
3. In case the requirement of Junction Box arises on account of Power Cable size mis-match due to vendor engineering at later stage, vendor shall supply the Junction Box for suitable termination.

SUB-SECTION-II-E2

MOTORS

LOT-3 PROJECTS FLUE GAS DESULPHURISATION (FGD) SYSTEM PACKAGE	TECHNICAL SPECIFICATION SECTION-VI BID DOCUMENT NO.: CS-0011-109(3)-9

CLAUSE NO.	TECHNICAL REQUIREMENTS

MOTORS

1.00.00 GENERAL REQUIREMENTS

1.01.00 For the purpose of design of equipment/systems, an ambient temperature of 50 deg. Centigrade and relative humidity of 95% (at 40 deg C) shall be considered. The equipment shall operate in a highly polluted environment.

1.02.00 All equipment's shall be suitable for rated frequency of 50 Hz with a variation of +3% & -5%, and 10% combined variation of voltage and frequency unless specifically brought out in the specification.

1.03.00 Contactor shall provide fully compatible electrical system, equipment's, accessories and services.

1.04.00 All the equipment, material and systems shall, in general, conform to the latest edition of relevant National and international Codes & Standards, especially the Indian Statutory Regulations.

1.05.00 Paint shade shall be as per RAL 5012 (Blue) for indoor and outdoor equipment.

1.06.00 The responsibility of coordination with electrical agencies and obtaining all necessary clearances for Contactors equipment and systems shall be under the Contactor scope.

1.07.00 Degree of Protection

Degree of protection for various enclosures as per IEC60034-05 shall be as follows :-

i)	Indoor motors	-	IP 54
ii)	Outdoor motors	-	IP 55
iii)	Cable box-indoor area	-	IP 54
iv)	Cable box-Outdoor area	-	IP 55

2.00.00 CODES AND STANDARDS

1)	Three phase induction motors	:	IS/IEC:60034
2)	Single phase AC motors	:	IS/ IEC:60034
3)	Crane duty motors	:	IS:3177, IS/IEC:60034
4)	DC motors/generators	:	IS:4722, IS/IEC:60034
5)	Energy Efficient motors	:	IS 12615, IEC:60034-30

CLAUSE NO.	TECHNICAL REQUIREMENTS
3.00.00	**TYPE**
3.01.00	**AC Motors:** a) Squirrel cage induction motor suitable for direct-on-line starting. b) Continuous duty LT motors upto 200 KW Output rating (at 50 deg.C ambient temperature), shall be **Premium Efficiency class-IE3**, conforming to IS 12615, or IEC:60034-30. HT motors shall have minimum design efficiency of 95 %. However, tolerance on this efficiency value shall be applicable as per IEC 60034 c) Crane duty motors shall be slip ring/ squirrel cage Induction motor as per the requirement. d) Motor operating through variable frequency drives shall be suitable for inverter duty with VPI insulation. Also these motors shall comply the requirements stipulated in IEC: 60034-18-41 and IEC: 60034-18-42 as applicable. e) Motors operating through variable frequency drives shall also meet the requirements mentioned in subsection for VFD.
3.02.00	DC Motors Shunt wound.
4.00.00	**RATING** (a) Continuously rated (S1). However, crane motors shall be rated for S4 duty, 40% cyclic duration factor. (b) Whenever the basis for motor or driven equipment ratings are not specified in the corresponding mechanical specification sub-sections, maximum continuous motor ratings shall be at least 10% above the maximum load demand of the driven equipment under entire operating range including voltage and frequency variations.
5.00.00	**TEMPERATURE RISE** **Air cooled motors** 70 deg. C by resistance method for both thermal class 130(B) & 155(F) insulation. **Water cooled** 80 deg. C over inlet cooling water temperature mentioned elsewhere, by resistance method for both thermal class 130(B) & 155(F) insulation.
6.00.00	**OPERATIONAL REQUIREMENTS**
6.01.00	**Starting Time**

CLAUSE NO.	TECHNICAL REQUIREMENTS
6.01.01	For motors with starting time upto 20 secs. at minimum permissible voltage during starting, the locked rotor withstand time under hot condition at highest voltage limit shall be at least 2.5 secs. more than starting time.
6.01.02	For motors with starting time more than 20 secs. and upto 45 secs. at minimum permissible voltage during starting, the locked rotor withstand time under hot condition at highest voltage limit shall be at least 5 secs. more than starting time.
6.01.03	For motors with starting time more than 45 secs. at minimum permissible voltage during starting, the locked rotor withstand time under hot condition at highest voltage limit shall be more than starting time by at least 10% of the starting time.
6.01.04	Speed switches mounted on the motor shaft shall be provided in cases where above requirements are not met.
6.02.00	**Torque Requirements**
6.02.01	Accelerating torque at any speed with the lowest permissible starting voltage shall be at least 10% motor rated torque.
6.02.02	Pull out torque at rated voltage shall not be less than 205% of rated torque. It shall be 275% for crane duty motors.
6.03.00	**Starting voltage requirement** (a) Up to 85% of rated voltage for ratings below 110 KW (b) Up to 80% of rated voltage for ratings from 110 KW to 200 KW (c) Up to 85% of rated voltage for ratings from 201 KW to 1000 KW (d) Up to 80% of rated voltage for ratings from 1001 KW to 4000 KW (e) Up to 75 % of rated voltage for ratings above 4000KW
7.00.00	**DESIGN AND CONSTRUCTIONAL FEATURES**
7.01.00	Suitable single phase space heaters shall be provided on motors rated 30KW and above to maintain windings in dry condition when motor is standstill. Separate terminal box for space heaters & RTDs shall be provided. However for flame proof motors, space heater terminals inside the main terminal box may be acceptable.
7.02.00	All motors shall be either Totally enclosed fan cooled (TEFC) or totally enclosed tube ventilated (TETV) or Closed air circuit air cooled (CACA) type. However, motors rated 3000KW or above can be Closed air circuit water cooled (CACW). The method of movement of primary and secondary coolant shall be self-circulated by fan or pump directly mounted on the rotor of the main motor as per IEC 60034-6. However VFD driven motors can be offered with forced cooling type with machine mounted fan or pump driven by separate electric motor. Motors and EPB located in hazardous areas shall have flame proof enclosures conforming to IS:2148 as detailed below

CLAUSE NO.	TECHNICAL REQUIREMENTS
	(a) Fuel oil area : Group – IIB (b) Hydrogen generation : Group - IIC or (Group-I, Div-II as per plant area NEC) or (Class-1, Group-B, Div-II as per NEMA /IEC60034)
7.03.00	Winding and Insulation (a) Type : Non-hygroscopic, oil resistant, flame resistant (b) Starting duty : Two hot starts in succession, with motor initially at normal running temperature. (c) 11kV, 6.6 KV & 3.3 kV AC motors : Thermal class 155 (F) insulation. The winding insulation process shall be total Vacuum Presure Impregnated i.e resin poor method. The lightning Impulse & interturn insulation surge withstand level shall be as per IEC-60034 part-15. (d) 240VAC, 415V AC & 220V DC motors : Thermal Class (B) or better
7.04.00	Motors rated above 1000KW shall have insulated bearings/housing to prevent flow of shaft currents.
7.05.00	Motors with heat exchangers shall have dial type thermometer with adjustable alarm contacts to indicate inlet and outlet primary air temperature.
7.06.00	Noise level for all the motors shall be limited to 85 dB(A) except for BFP motor for which the maximum limit shall be 90dB(A). Vibration shall be limited within the limits prescribed in IS:12075 / IEC 60034-14 . Motors shall withstand vibrations produced by driven equipment. HT motor bearing housings shall have flat surfaces, in both X and Y directions, suitable for mounting 80mmX80mm vibration pads.
7.07.00	In HT motors, at least four numbers simplex / two numbers duplex platinum resistance type temperature detectors shall be provided in each phase stator winding. Each bearing of HT motor shall be provided with dial type thermometer and minimum 2 numbers duplex platinum resistance type temperature detectors.
7.08.00	Motor body shall have two earthing points on opposite sides.
7.09.00	11 KV motors shall be offered with Separable Insulated Connector (SIC) as per IEEE 386. The offered SIC terminations shall be provided with protective cover and trifurcating sleeves. SIC termination kit shall be suitable for fault level of 25 KA for 0.17 seconds.
7.10.00	3.3/6.6 KV motors shall be offered with dust tight phase separated double walled (metallic as well as insulated barrier) Terminal box. Contractor shall provide termination kit for the offered Terminal box. The offered Terminal Box shall be

CLAUSE NO.	TECHNICAL REQUIREMENTS
	suitable for fault level of 250 MVA for 0.12 sec. Removable gland plates of thickness 3 mm (hot/cold rolled sheet steel) or 4 mm (non magnetic material for single core cables) shall be provided.
7.11.00	The spacing between gland plate & centre of bottom terminal stud shall be as per Table-I.
7.12.00	All motors shall be so designed that maximum inrush currents and locked rotor and pullout torque developed by them at extreme voltage and frequency variations do not endanger the motor and driven equipment.
7.13.00	The motors shall be suitable for bus transfer schemes provided on the 11kV, 6.6 KV, 3.3 kV /415V systems without any injurious effect on its life.
7.14.00	For motors rated 2000 KW & above, neutral current transformers of PS class shall be provided on each phase in a separate neutral terminal box.
7.15.00	The size and number of cables (for HT motors) to be intimated to the successful Contactor during detailed engineering and the Contactor shall provide terminal box suitable for the same.
8.00.00	The ratio of locked rotor KVA at rated voltage to rated KW shall not exceed the following (without any further tolerance): (a) From 50KW & upto 110KW : 11.0 (b) From 110 KW & upto 200 KW : 9.0 (c) Above 200 KW & upto 1000KW : 10.0 (d) From 1001KW & upto 4000KW : 9.0 (e) Above 4000KW : 6 to 6.5
10.00.00	**TYPE TEST**
10.01.00	**HT MOTORS**
10.01.01	The Contactor shall carry out the type tests as listed in this specification on the equipment to be supplied under this contract. The Contactor shall indicate the charges for each of these type tests separately in the relevant schedule of Section - VII- (BPS) and the same shall be considered for the evaluation of the bids. The type tests charges shall be paid only for the test(s) actually conducted successfully under this contract and upon certification by the Employer's engineer.
10.01.02	The type tests shall be carried out in presence of the Employer's representative, for which minimum 15 days notice shall be given by the Contactor. The Contactor shall obtain the Employer's approval for the type test procedure before conducting the type test. The type test procedure shall clearly specify the test set–up, instruments to be used, procedure, acceptance norms, recording of different

CLAUSE NO.	TECHNICAL REQUIREMENTS
	parameters, interval of recording, precautions to be taken etc. for the type test(s) to be carried out.
10.01.03	In case the Contactor has conducted such specified type test(s) within last ten years as on the date of bid opening, he may submit during detailed engineering the type test reports to the Employer for waival of conductance of such test(s). These reports should be for the tests conducted on the equipment similar to those proposed to be supplied under this contract and test(s) should have been either conducted at an independent laboratory or should have been witnessed by a client. The Employer reserves the right to waive conducting of any or all the specified type test(s) under this contract. In case type tests are waived, the type test charges shall not be payable to the Contactor.
10.01.04	Further the Contactor shall only submit the reports of the type tests as listed in "LIST OF TESTS FOR WHICH REPORTS HAVE TO BE SUBMITTED" and carried out within last ten years from the date of bid opening. These reports should be for the test conducted on the equipment similar to those proposed to be supplied under this contract and the test(s) should have been either conducted at an independent laboratory or should have been witnessed by a client. However if the Contactor is not able to submit report of the type test(s) conducted within last ten years from the date of bid opening, or in the case of type test report(s) are not found to be meeting the specification requirements, the Contactor shall conduct all such tests under this contract at no additional cost to the Employer either at third party lab or in presence of client/Employers representative and submit the reports for approval.
10.01.05	**LIST OF TYPE TESTS TO BE CONDUCTED** **The following type tests shall be conducted on each type and rating of HT motor** (a) No load saturation and loss curves upto approximately 115% of rated voltage (b) Measurement of noise at no load. (c) Momentary excess torque test (subject to test bed constraint). (d) Full load test(subject to test bed constraint) (e) Temperature rise test at rated conditions. During heat run test, bearing temp., winding temp.,coolant flow and its temp. shall also be measured. In case the temperature rise test is carried at load other than rated load, specific approval for the test method and procedure is required to be obtained. Wherever ETD's are provided, the temperature shall be measured by ETD's also for the record purpose.

CLAUSE NO.	TECHNICAL REQUIREMENTS
10.01.06	**LIST OF TESTS FOR WHICH REPORTS HAVE TO BE SUBMITTED** The following type test reports shall be submitted for each type and rating of HT motor (a) Degree of protection test for the enclosure followed by IR, HV and no load run test. (b) Terminal box-fault level withstand test for each type of terminal box of HT motors only. (c) Lightning Impulse withstand test on the sample coil shall be as per clause no. 4.3 IEC-60034, part-15 (d) Surge-withstand test on inter-turn insulation shall be as per clause no. 4.2 of IEC 60034, part-15
10.02.00	**LT Motors**
10.02.01	LT Motors supplied shall be of type tested design. During detailed engineering, the Contactor shall submit for Employer's approval the reports of all the type tests as listed in this specification and carried out within last *ten* years from the date of bid opening. These reports should be for the test conducted on the equipment similar to those proposed to be supplied under this contract and the test(s) should have been either conducted at an independent laboratory or should have been witnessed by a client.
10.02.02	However if the Contactor is not able to submit report of the type test(s) conducted within last ten years from the date of bid opening, or in the case of type test report(s) are not found to be meeting the specification requirements, the Contactor shall conduct all such tests under this contract at no additional cost to the Employer either at third party lab or in presence of client/Employers representative and submit the reports for approval.
10.02.03	**LIST OF TESTS FOR WHICH REPORTS HAVE TO BE SUBMITTED** **The following type test reports shall be submitted for each type and rating of LT motor of above 100 KW only** 1. Measurement of resistance of windings of stator and wound rotor. 2. No load test at rated voltage to determine input current power and speed 3. Open circuit voltage ratio of wound rotor motors (in case of Slip ring motors) 4. Full load test to determine efficiency power factor and slip 5. Temperature rise test

CLAUSE NO.	TECHNICAL REQUIREMENTS
	6. Momentary excess torque test. 7. High voltage test 8. Test for vibration severity of motor. 9. Test for noise levels of motor(Shall be limited as per clause no 7.06.00 of this section) 10. Test for degree of protection and 11. Overspeed test. 12. Type test reports for motors located in fuel oil area having flame proof enclosures as per IS 2148 / IEC 60079-1
10.03.00	All acceptance and routine tests as per the specification and relevant standards shall be carried out. Charges for these shall be deemed to be included in the equipment price.
10.04.00	The type test reports once approved for any projects shall be treated as reference. For subsequent projects of NTPC, an endorsement sheet will be furnished by the manufacturer confirming similarity and “No design Change”. Minor changes if any shall be highlighted on the endorsement sheet.

CLAUSE NO.	TECHNICAL REQUIREMENTS

TABLE - I

DIMENSIONS OF TERMINAL BOXES FOR LV MOTORS

Motor MCR in KW	**Minimum distance between centre of bottom terminal stud and gland plate in mm**
UP to 3 KW	**As per manufacturer's practice.**
Above 3 KW - upto 7 KW	85
Above 7 KW - upto 13 KW	115
Above 13 KW - upto 24 KW	167
Above 24 KW - upto 37 KW	196
Above 37 KW - upto 55 KW	249
Above 55 KW - upto 90 KW	277
Above 90 KW - upto 125 KW	331
Above 125 KW-upto 200 KW	385/203 (For Single core cables only)

For HT motors the distance between gland plate and the terminal studs shall not be less than 500 mm.

PHASE TO PHASE/ PHASE TO EARTH AIR CLEARANCE:

NOTE: Minimum inter-phase and phase-earth air clearances for LT motors with lugs installed shall be as follows:

Motor MCR in KW	**Clearance**
UP to 110 KW	10mm
Above 110 KW and upto 150 KW	12.5mm
Above 150 KW	19mm

GENERAL TECHNICAL REQUIREMENTS

FOR

LV MOTORS

SPECIFICATION NO.: PE-SS-999-506-E101 Rev 00

BHEL	TITLE : GENERAL TECHNICAL REQUIREMENTs FOR LV MOTORS	SPECIFICATION NO. PE-SS-999-506-E101
		VOLUME NO. : **II-B**
		SECTION : **D**
		REV NO. : **00** DATE : 29/08/2005
		SHEET : 1 OF 4

1.0 INTENT OF SPECIFIATION

The specification covers the design, materials, constructional features, manufacture, inspection and testing at manufacturer's work, and packing of Low voltage (LV) squirrel cage induction motors along with all accessories for driving auxiliaries in thermal power station.

Motors having a voltage rating of below 1000V are referred to as low voltage (LV) motors.

2.0 CODES AND STANDARDS

Motors shall fully comply with latest edition, including all amendments and revision, of following codes and standards:

IS:325	Three phase Induction motors
IS : 900	Code of practice for installation and maintenance of induction motors
IS: 996	Single phase small AC and universal motors
IS: 4722	Rotating Electrical machines
IS: 4691	Degree of Protection provided by enclosures for rotating electrical machines
IS: 4728	Terminal marking and direction of rotation rotating electrical machines
IS: 1231	Dimensions of three phase foot mounted induction motors
IS: 8789	Values of performance characteristics for three phase induction motors
IS: 13555	Guide for selection and application of 3-phase A.C. induction motors for different types of driven equipment
IS: 2148	Flame proof enclosures for electrical appliance
IS: 5571	Guide for selection of electrical equipment for hazardous areas
IS: 12824	Type of duty and classes of rating assigned
IS: 12802	Temperature rise measurement for rotating electrical machnines
IS: 12065	Permissible limits of noise level for rotating electrical machines
IS: 12075	Mechanical vibration of rotating electrical machines

In case of imported motors, motors as per IEC-34 shall also be acceptable.

3.0 DESIGN REQUIREMENTS

3.1 Motors and accessories shall be designed to operate satisfactorily under conditions specified in data sheet-A and Project Information, including voltage & frequency variation of supply system as defined in Data sheet-A

3.2 Motors shall be continuously rated at the design ambient temperature specified in Data Sheet-A and other site conditions specified under Project Information
Motor ratings shall have at least a 15% margin over the continuous maximum demand of the driven equipment, under entire operating range including voltage & frequency variation specified above.

3.3 Starting Requirements

3.3.1 Motor characteristics such as speed, starting torque, break away torque and starting time shall be properly co-ordinated with the requirements of driven equipment. The accelerating torque at any speed with the minimum starting voltage shall be at least 10% higher than that of the driven equipment.

3.3.2 Motors shall be capable of starting and accelerating the load with direct on line starting without exceeding acceptable winding temperature.

The limiting value of voltage at rated frequency under which a motor will successfully start and accelerate to rated speed with load shall be taken to be a constant value as per Data Sheet - A during the starting period of motors.

3.3.3 The following frequency of starts shall apply

i) Two starts in succession with the motor being initially at a temperature not exceeding the rated load temperature.

ii) Three equally spread starts in an hour the motor being initially at a temperature not exceeding the rated load operating temperature. (not to be repeated in the second successive hour)

iii) Motors for coal conveyor and coal crusher application shall be suitable for three consecutive hot starts followed by one hour interval with maximum twenty starts per day and shall be suitable for mimimum 20,000 starts during the life time of the motor

3.4 **Running Requirements**

3.4.1 Motors shall run satisfactorily at a supply voltage of 75% of rated voltage for 5 minutes with full load without injurious heating to the motor.

3.4.2 Motor shall not stall due to voltage dip in the system causing momentary drop in voltage upto 70% of the rated voltage for duration of 2 secs.

3.5 **Stress During bus Transfer**

3.5.1 Motors shall withstand the voltage, heavy inrush transient current, mechanical and torque stress developed due to the application of 150% of the rated voltage for at least 1 sec. caused due to vector difference between the motor residual voltage and the incoming supply voltage during occasional auto bus transfer.

3.5.2 Motor and driven equipment shafts shall be adequately sized to satisfactorily withstand transient torque under above condition.

3.6 Maximum noise level measured at distance of 1.0 metres from the outline of motor shall not exceed the values specified in IS 12065.

3.7 The max. vibration velocity or double amplitude of motors vibration as measured at motor bearings shall be within the limits specified in IS: 12075.

4.0 **CONSTRUCTIONAL FEATURES**

4.1 Indoor motors shall conform to degree of protection IP: 54 as per IS: 4691. Outdoor or semi-indoor motors shall conform to degree of protection IP: 55 as per IS: 4691and shall be of weather-proof construction. Outdoor motors shall be installed under a suitable canopy

4.2 Motors upto 160KW shall have Totally Enclosed Fan Cooled (TEFC) enclosures, the method of cooling conforming to IC-0141 or IC-0151 of IS: 6362.

Motors rated above 160 KW shall be Closed Air Circuit Air (CACA) cooled

4.3 Motors shall be designed with cooling fans suitable for both directions of rotation.

4.4. Motors shall not be provided with any electric or pneumatic operated external fan for cooling the motors.

4.5 Frames shall be designed to avoid collection of moisture and all enclosures shall be provided with facility for drainage at the lowest point.

4.6 In case Class 'F' insulation is provided for LV motors, temperature rise shall be limited to the limits applicable to Class 'B' insulation.
In case of continuous operation at extreme voltage limits the temperature limits specified in table-1 of IS:325 shall not exceed by more than 10°C.

4.7 **Terminals and Terminal Boxes**

4.7.1 Terminals, terminal leads, terminal boxes, windings tails and associated equipment shall be suitable for connection to a supply system having a short circuit level, specified in the Data Sheet-A.

Unless otherwise stated in Data Sheet-A, motors of rating 110 kW and above will be controlled by circuit breaker and below 110 kW by switch fuse-contactor. The terminal box of motors shall be designed for the fault current mentioned in data sheet "A".

4.7.2 unless otherwise specified or approved, phase terminal boxes of horizontal motors shall be positioned on the left hand side of the motor when viewed from the non-driving end.

4.7.3 Connections shall be such that when the supply leads R, Y & B are connected to motor terminals A B & C or U, V & W respectively, motor shall rotate in an anticlockwise direction when viewed from the non-driving end. Where such motors require clockwise rotation, the supply leads R, Y, B will be connected to motor terminals A, C, B or U W & V respectively.

4.7.4 Permanently attached diagram and instruction plate made preferably of stainless steel shall be mounted inside terminal box cover giving the connection diagram for the desired direction of rotation and reverse rotation.

4.7.5 Motor terminals and terminal leads shall be fully insulated with no bar live parts. Adequate space shall be available inside the terminal box so that no difficulty is encountered for terminating the cable specified in Data Sheet-A.

4.7.6 Degree of protection for terminal boxes shall be IP 55 as per IS 4691.

4.7.7 Separate terminal boxes shall be provided for space heaters.. If this is not possible in case of LV motors, the space heater terminals shall be adequately segregated from the main terminals in the main terminal box. Detachable gland plates with double compression brass glands shall be provided in terminal boxes.

4.7.8. Phase terminal boxes shall be suitable for 360 degree of rotation in steps of 90 degree for LV motors.

4.7.9 Cable glands and cable lugs as per cable sizes specified in Data Sheet-A shall be included. Cable lugs shall be of tinned Copper, crimping type.

4.8 Two separate earthing terminals suitable for connecting G.I. or MS strip grounding conductor of size given in Data Sheet-A shall be provided on opposite sides of motor frame. Each terminal box shall have a grounding terminal.

4.9 **General**

4.9.1 Motors provided for similar drives shall be interchangeable.

4.9.2 Suitable foundation bolts are to be supplied alongwith the motors.

4.9.3 Motors shall be provided with eye bolts, or other means to facilitate safe lifting if the weight is 20Kgs. and above.

4.9.4 Necessary fitments and accessories shall be provided on motors in accordance with the latest Indian Electricity rules 1956.

4.9.5 All motors rated above 30 kW shall be provided with space heaters to maintain the motor internal air temperature above the dew point. Unless otherwise specified, space heaters shall be suitable for a supply of 240V AC, single phase, 50 Hz.

4.9.6 Name plate with all particulars as per IS: 325 shall be provided

4.9.7 Unless otherwise specified, the colour of finish shall be grey to Shade No. 631 and 632 as per IS:5 for motors installed indoor and outdoor respectively. The paint shall be epoxy based and shall be suitable for withstanding specified site conditions.

5.0 INSPECTION AND TESTING

5.1 All materials, components and equipments covered under this specification shall be procured, manufactured, as per the BHEL standard quality plan No. PED-506-00-Q-006/0 and PED-506-00-Q-007/2 enclosed with this specification and which shall be complied.

5.2 LV motors of type-tested design shall be provided. Valid type test reports not more than 5 year shall be furnished. In the absence of these, type tests shall have to be conducted by manufacturer without any commercial implication to purchaser.

5.3 All motors shall be subjected to routine tests as per IS: 325 and as per BHEL standard quality plan.

5.4 Motors shall also be subjected to additional tests, if any, as mentioned in Data Sheet A.

6.0 DRAWINGS TO BE SUBMITTED AFTER AWARD OF CONTRACT

a) OGA drawing showing the position of terminal boxes, earthing connections etc.
b) Arrangement drawing of terminal boxes.
c) Characteristic curves:
(*To be given for motor above 55 kW unless otherwise specified in Data Sheet*).

i) Current vs. time at rated voltage and minimum starting voltage.
ii) Speed vs. time at rated voltage and minimum starting voltage.
iii) Torque vs. speed at rated voltage and minimum voltage.
For the motors with solid coupling the above curves i), ii), iii) to be furnished for the motors coupled with driven equipment. In case motor is coupled with mechanical equipment by fluid coupling, the above curves shall be furnished with and without coupling.
iv) Thermal withstand curve under hot and cold conditions at rated voltage and max. permissible voltage.

SUB-SECTION-II-E6

CABLING ~~EARTHING & LIGHTNING PROTECTION~~

LOT-3 PROJECTS FLUE GAS DESULPHURISATION (FGD) SYSTEM PACKAGE	TECHNICAL SPECIFICATION SECTION-VI BID DOCUMENT NO.: CS-0011-109(3)-9

CLAUSE NO.	TECHNICAL REQUIREMENTS

1.00.00 **CODES AND STANDARDS**

1.01.00 All standards, specifications and codes of practice referred to herein shall be the latest editions including all applicable official amendments and revisions as on date of opening of bid. In case of conflict between this specification and those (IS codes, standards, etc.) referred to herein, the former shall prevail. All work shall be carried out as per the following standards/ codes as applicable .

IS:513	Cold rolled low carbon steel sheets and strips.
IS:802	Code of practice for the use of Structural Steel in Overhead Transmission Line Towers.
IS:1079	Hot Rolled carbon steel sheet & strips
IS:1239	Mild steel tubes, tubulars and other wrought steel flttings
IS:1255	Code of practice for installation and maintenance of power cables upto and including 33 KV rating
IS:1367 Part-13	Technical supply conditions for threaded Steel fasteners. (Hot dip galvanized coatings on threaded fasteners).
IS:2147	Degree of protection provided by enclosures for low voltage switchgear and control gear
IS:2309	Code of Practice for the protection of building and allied structures against lightning.
IS:2629	Recommended practice for hot dip galvanising of iron & steel
IS:2633	Method for testing uniformity of coating on zinc coated articles.
IS:3043	Code of practice for Earthing
IS:3063	Fasteners single coil rectangular section spring washers.
IS:6745	Methods for determination of mass of zinc coating on zinc coated iron & steel articles.
IS:8308	Compression type tubular in- line connectors for aluminium conductors of insulated cables
IS:8309	Compression type tubular terminal ends for aluminium conductors of insulated cables.
IS:9537	Conduits for electrical installation.
IS:9595	Metal - arc welding of carbon and carbon manganese steels - recommendations.
IS:13573	Joints and terminations for polymeric cables.
BS:476	Fire tests on building materials and structures
IEEE:80	IEEE guide for safety in AC substation grounding

CLAUSE NO.	TECHNICAL REQUIREMENTS

	IEEE:142	Grounding of Industrial & commercial power systems
	DIN 46267 (Part-II)	Non tension proof compression joints for Aluminium conductors.
	DIN 46329	Cable lugs for compression connections, ring type ,for Aluminium conductors
	BS:6121	Specification for mechanical Cable glands for elastomers and plastic insulated cables.
		Indian Electricity Act.
		Indian Electricity Rules.

1.02.00 Equipment complying with other internationally accepted standards such as IEC, BS, DIN, USA, VDE, NEMA etc. will also be considered if they ensure performance and constructional features equivalent or superior to standards listed above. In such a case, the Bidder shall clearly indicate the standard(s) adopted, furnish a copy in English of the latest revision of the standards alongwith copies of all official amendments and revisions in force as on date of opening of bid and shall clearly bring out the salient features for comparison.

2.00.00 DESIGN AND CONSTRUCTIONAL FEATURE

2.01.00 **Inter Plant Cabling**

2.01.01 Interplant cabling for main routes shall be laid along overhead trestles/duct banks. Cables from main plant to switchyard control room shall be laid in overhead trestles or duct bank. In case of Duct banks, pull-pits shall be filled with sand and provided with a PCC covering. Directly buried cables, if essential, shall not have concentration of more than 4 cables in one route. Cables crossing Railway line (if applicable) shall be laid underground through nearest culvert. Necessary statutory clearance if required shall be taken by Bidder. All HT,LT and control cable shall be armoured.

2.01.02 **Transformer yard**

In transformer yard cables shall be laid in overhead trestle. The main cable routes coming out from Main plant building and crossing the Transformer yard shall be laid in overhead trestles. In transformer yard, trestle height for rail/road crossing shall be suitable for movement of Generator Transformer with bushing.

2.01.03 **Trenches**

PCC flooring of built up trenches shall be sloped for effective drainage with sump pits and sump pumps.

2.01.04 No sub zero level cable vault/trenches shall be provided below control building/switchgear rooms in main plant.

2.01.05 **Cable Vault**

The cable vault/ / cable spreader room space below the HT / LT switchgear room, Control Rooms, unit control equipment room, Programmer room, UPS, Charger & Battery Rooms, shall have **800 mm wide** and 2.1 m high movement passage all around the cable trays in the cable vault/ cable spreader room for easy laying/maintenance of cables

Cable vaults shall be provided with adequate drainage facilities for drainage of fire water.

CLAUSE NO.	TECHNICAL REQUIREMENTS
	Each cable vault should have at least two doors. Exit signs shall be provided near doors for personnel escape in case of emergency
2.01.06	**Boiler Area** Cable trays in boiler & ESP area shall be supported from the boiler and ESP structures. The same shall be coordinated with SG/ESP contractor. Cable trays in these areas shall be in vertical formation to avoid dust accumulation. No cable trenches shall be provided in boiler/ESP area.
2.01.07	Two separate cable routes shall be provided for cable routing of working and standby drives or different set/group (say 50% capacity) of auxiliaries.
2.01.08	**OffSite Area** For feeder in bidder's scope for offsite areas, overhead cable tray arrangement shall be followed. However cable trenches/slit may also be acceptable, for some areas, if found to be required during detailed engineering. Cable trenches provided shall be separated from fuel oil area to avoid oil accumulation.
2.01.09	The cable slits to be used for motor/equipment power/control supply shall be sand filled & covered with PCC after cabling.
2.01.10	Sizing criteria, derating factors for the cables shall be met as per respective chapters. However for the power cables, the minimum conductor size shall be 6 sq.mm. for aluminium conductor and 2.5 sq.mm. for copper conductor cable.
2.01.11	Conscious exceptions to the above guidelines may be accepted under special conditions but suitable measures should be taken at such location to: • Meet all safety requirements • Safeguard against fire hazards, mechanical damage, flooding of water, oil accumulation, electrical faults/interferences, etc
3.00.00	**EQUIPMENT DESCRIPTION**
3.01.00	**Cable trays, Fittings & Accessories**
3.01.01	Cable trays shall be ladder/perforated type as specified complete with matching fittings (like brackets, elbows, bends, reducers, tees, crosses, etc.) accessories (like side coupler plates, etc. and hardware (like bolts, nuts, washers, G.I. strap, hook etc.) as required. Cable tray shall be ladder type for power & control cables and perforated for instrumentation cables.
3.01.02	Cable trays, fittings and accessories shall be fabricated out of rolled mild steel sheets free from flaws such as laminations, rolling marks, pitting etc. These (including hardware) shall be hot dip galvanized as per Clause No. 3.13.00 of this chapter.
3.01.03	Cable trays shall have standard width of 150 mm, 300 mm & 600 mm and standard lengths of 2.5 metre. Thickness of mild steel sheets used for fabrication of cable trays and fittings shall be 2 mm. The thickness of side coupler plates shall be 3 mm.
3.01.04	Cable troughs shall be required for branching out few cables from main cable route. These shall be U-shaped, fabricated of mild steel sheets of thickness 2 mm and shall be hot dip

CLAUSE NO.	TECHNICAL REQUIREMENTS
	galvanised as per Clause No. 3.13.00 of this chapter. Troughs shall be standard width of 50 mm & 75 mm with depth of 25 mm.
3.01.05	The tolerance for cable tray and accessories shall be as per IS 2102 (Part-1). Tolerance Class: - Coarse
3.02.00	**Support System for Cable Trays**
3.02.01	Cable tray support system shall be pre-fabricated out of single sheet as per enclosed tender drawings.
3.02.02	Support system for cable trays shall essentially comprise of the two components i.e. main support channel and cantilever arms. The main support channel shall be of two types : (i) C1:- having provision of supporting cable trays on one side and (ii) C2:-having provision of supporting cable trays on both sides. The support system shall be the type described hereunder a. Cable supporting steel work for cable racks/cables shall comprise of various channel sections, cantilever arms, various brackets, clamps, floor plates, all hardwares such as lock washers, hexagon nuts, hexagon head bolt, support hooks, stud nuts, hexagon head screw, channel nut, channel nut with springs, fixing studs, etc. b. The system shall be designed such that it allows easy assembly at site by using bolting. All cable supporting steel work, hardwares fitings and accessories shall be prefabricated factory galvanised. c. The main support and cantilever arms shall be fixed at site using necessary brackets, clamps, fittings, bolts, nuts and other hardware etc. to form various arrangements required to support the cable trays. Welding of the components shall not be allowed. However, welding of the bracket (to which the main support channel is bolted) to the overhead beams, structural steel, insert plates or reinforcement bars will be permitted. Any cutting or welding of the galvansied surface shall be brushed and red lead primer, oil primer & aluminium paint shall be applied d. All steel components, accessories, fittings and hardware shall be hot dip galvanised after completing welding, cutting, drilling and other machining operation. e. The typical arrangement of flexible support system is shown in the enclosed drawings and described briefly below: The main support channel and cantilever arms shall be fabricated out of 2.5 thick rolled steel sheet conforming to IS 1079. f. Cantilever arms of 320 mm, 620mm and 750 mm in length are required, and shall be as shown in the enclosed drawing. The arm portion shall be suitable for assembling the complete arm assembly on to component constructed of standard channel section. The back plate shall allow sufficient clearance for fixing bolt to be tightened with tray in position. g. Support system shall be able to withstand • weight of the cable trays • weight of the cables (75 Kg/Metre run of each cable tray) • Concentrated load of 75 Kg between every support span. • Factor of safety of minimum 1.5 shall be considered.

CLAUSE NO.	TECHNICAL REQUIREMENTS
3.02.03	The size of structural steel members or thickness of sheet steel of main support channel and cantilever arms and other accessories as indicated above or in the enclosed drawings are indicative only. Nevertheless, the support system shall be designed by the bidder to fully meet the requirements of type tests as specified. In case the system fails in the tests, the components design modification shall be done by the Bidder without any additional cost to the Employer. The bidder shall submit the detailed drawings of the system offered by him alongwith the bid.
3.02.04	Four legged structure shall be provided wherever there is change in elevation and change in direction
3.02.05	FOR COAL HANDLING PLANT/**FGD PLANT AREA** THE FOLLOWING SHALL ALSO BE APPLICABLE**:** a) All overhead cable routes shall be along the route of the conveyor gallery on separate supporting structures and cables shall be laid in vertical trays. The bottom of the steel shall be such that the existing facilities, movement of trucks/human beings etc. does not get affected. The cable trestle shall have a minimum 600mm clear walk way and shall have maintenance platforms as required. The bottom of the steel supporting structure shall be generally at 3.0M above the grade level except for rail/road crossings where it shall be at 8.0M above grade level. Tap offs from the overhead cable trestle can be through shallow trenches with prior approval of the Employer. Directly buried cable, if essential, shall not have concentration of more than 4 cables on one route. b) Cable trenches shall be provided only in Switchgear/MCC rooms. c) Cables shall not be routed through the conveyor galleries except for the equipment located in the conveyor galleries for a particular conveyor i.e. protection switches, receptacles etc. d) Cables for PCS and BSS shall be routed along the conveyors through GI conduits.
3.03.00	**Pipes, Fittings & Accessories**
3.03.01	Pipes offered shall be complete with fittings and accessories (like tees, elbows, bends, check nuts, bushings, reducers, enlargers, coupling caps, nipples etc.) The size of the pipe shall be selected on the basis of maximum 40% fill criteria
3.03.02	GI Pipes shall be of medium duty as per IS: 1239
3.03.03	Duct banks shall be High Density PE pipes encased in PCC (10% spare of each size, subject to minimum one) with suitable water-proof manholes.
3.03.04	Hume pipes shall be NP3 type as per IS 458.
3.03.05	TERNE Coated Flexible Steel Conduits shall be water proof and rust proof made of heat resistant lead coated steel. Conduit diameter shall be uniform throughout its length. Internal surface of the conduit shall be free from burrs and sharp edges. Conduits shall be complete with necessary accessories for proper termination of the conduit with junction boxes and lighting fixtures
3.03.06	HDPE pipes and conduits shall be PE-80, PN-10 type as per IS 4984/IS 8008 part-I.

CLAUSE NO.	TECHNICAL REQUIREMENTS
3.04.00	**Junction Boxes**
3.04.01	Junction box shall be made of Fire retardant material. Material of JB shall be Thermoplastic or thermosetting or FRP type. The box shall be provided with the terminal blocks, mounting bracket and screws etc. The cable entry shall be through galvanized steel conduits of suitable diameter. The JB shall have suitable for installing glands of suitable size on the bottom of the box. The JB shall be suitable for surface mounting on ceiling/structures. The JB shall be of grey color RAL 7035. All the metal parts shall be corrosion protected. Junction box surface should be such that it is free from crazings, blisterings, wrinkling, colour blots/striations. There should not be any mending or repair of surface. JB's will be provided with captive screws so that screws don't fall off when cover is opened. JB's mounting brackets should be of powder coated MS. Type test reports for the following tests shall be furnished:- (a) Impact resistance for impact energy of 2 Joules (IK07)as per BS EN50102 (b) Thermal ageing at 70deg C for 96 hours as per IEC60068-2-2Bb. (c) Class of protection shall be IP 55. (d) HV test.
3.04.02	Terminal blocks shall be 1100V grade, of suitable current rating, made up of unbreakable polyamide 6.6 grade. The terminals shall be screw type or screw-less (spring loaded) / cage clamp type with lugs. Marking on terminal strips shall correspond to the terminal numbering in wiring diagrams. All metal parts shall be of non-ferrous material. In case of screw type terminals the screw shall be captive, preferably with screw locking design. All terminal blocks shall be suitable for terminating on each side the required cables/wire size. All internal wiring shall be of cu. Conductor PVC wire.
3.05.00	**Terminations & Straight Through Joints**
3.05.01	Termination and jointing kits for 33kV, 11 kV, 6.6 KV and 3.3 kV grade XLPE insulated cables shall be of proven design and make which have already been extensively used and type tested. Termination kits and jointing kits shall be Pre-moulded type or heat shrinkable type. Further Cold shrinkable type termination and jointing kits are also acceptable. The Cold shrinkable type kits shall be type tested as per relevant standards. Calculation to withstand the required fault level shall also be furnished in case of cold shrinkable type kits. 33 kV, 11 kV, 6.6 KV and 3.3kV grade joints and terminations shall be type tested and Type test reports as per IS:13573 Part-II and IEC60502 shall be furnished. Also, heat shrink material shall comply with requirements of ESI 09-13 (external tests). Critical components used in cable accessories shall be of tested and proven quality as per relevant product specification/ESI specification. Cable joints and terminations should be with FRLS properties as per IEC 60754-1&2. Kit contents shall be supplied from the same source as were used for type testing. The kit shall be complete with the tinned copper solderless crimping type cable lugs & ferrule or mechanical connectors (wherein bolts are tightened that shear off at an appropriate torque) as per DIN standard suitable for aluminium compacted conductor cables. (Tender drg. no 0000-211-POE –A-51-RA of cable lug attached at the end of this chapter).
3.05.02	Straight through joint and termination shall be capable of withstanding the fault level of 21 KA for 0.12 Sec. with dynamic peak of 52 KA for 33 KV system & of 40 kA for 0.12 sec with a dynamic peak of 100 kA for 11 kV, 6.6 KV & 3.3 KV system. Straight through joints shall have provisions for shield connection and earthing wherever required and complete with all accessories and consumables suitable for storage without deterioration at a temperature of 50 deg. C with shelf life of more than five years. 1.1 kV grade straight through joints shall also be of proven design

CLAUSE NO.	TECHNICAL REQUIREMENTS
3.05.03	1.1 KV grade Straight Through Joint shall be of proven design.
3.06.00	**Cable glands**
3.06.01	Cable shall be terminated using double compression type cable glands. Testing requirements of Cable glands shall conform to BS:6121 and gland shall be of robust construction capable of clamping cable and cable armour (for armoured cables) firmly without injury to insulation. Cable glands shall be made of heavy duty brass machine finished and nickel chrome plated. Thickness of plating shall not be less than 10 micron. All washers and hardware shall also be made of brass with nickel chrome plating Rubber components shall be of neoprene or better synthetic material and of tested quality. Cable glands shall be suitable for the sizes of cable supplied/erected.
3.07.00	**Cable lugs/ferrules**
3.07.01	Cable lugs/ferrules for power cables shall be tinned copper solderless crimping type suitable for aluminium compacted conductor cables. Cable lugs and ferrules for control cables shall be tinned copper type. The cable lugs for control cables shall be provided with insulating sleeve and shall suit the type of terminals provided on the equipments. Cable lugs and ferrule shall conform to IS/DIN standards.
3.08.00	**Trefoil clamps**
3.08.01	Trefoil clamps for single core cables shall be pressure die cast aluminum or fibre glass or nylon and shall include necessary fixing accessories like G.I. nuts, bolts, washers, etc. Trefoil clamps shall have adequate mechanical strength, when installed at 1 mtr intervals, to withstand the forces generated by the peak value of maximum system short circuit current.
3.09.00	**Cable Clamps & Ties**
3.09.01	The cable clamps/ties required to clamp multicore cables shall be of SS-316 material, 12mm wide, polyster coated ladder lock type. The clamps/ties shall have self locking arrangement & shall have sufficient strength. The cable clamps/ties shall be supplied in finished individual pieces of suitable length to meet the site requirements.
3.10.00	**Receptacles**
3.10.01	Receptacles boxes shall be fabricated out of MS sheet of 2mm thickness and hot dipped gavanised or of die-cast aluminium alloy of thickness not less than 2.5 mm. The boxes shall be provided with two nos. earthing terminals, gasket to achieve IP55 degree of protection, terminal blocks for loop-in loop-out for cable of specified sizes, mounting brackets suitable for surface mounting on wall/column/structure, gland plate etc. The ON-OFF switch shall be rotary type heavy duty, double break,AC23 category, suitable for AC supply. Plug and Socket shall be shrouded Die-cast aluminium. Socket shall be provided with lid safety cover. Robust mechanical interlock shall be provided such that the switch can be put ON only when the plug is fully engaged and plug can be withdrawn only when the switch is in OFF position. Also cover can be opened only when the switch is in OFF position. Wiring shall be carried out with 1100 V grade PVC insulated stranded aluminium/copper wire of adequate size. The Terminal blocks shall be of 1100 V grade. The Terminal blocks shall be of 1100 V grade made up of unbreakable polymide 6.6 grade with adequate current rating and size. The welding receptacles shall be provided with RCCB/RCD of 30mA sensitivity having facility for manual testing/checking of operation of RCCB/RCD.
3.11.00	**Cable Drum Lifting Jack**
	The jack for cable drum lifting shall be of screw type with 10 ton capacity. The cable drum jacks shall be manufactured from fabricated steel. The spindles supplied with the cable drum jack shall be manufactured using BSEN-24 grade steel bar with locking collars. Jack

CLAUSE NO.	TECHNICAL REQUIREMENTS
	nests shall be of SG cast steel. Cable drum jack supplied shall have undergone load testing and reports for the same shall be submitted. At least Two Nos. of jacks shall be supplied for NTPC use. Contractor has to make arrangements for his own jacks for cable reeling/unreeling under his scope of installation.
3.12.00	**Galvanising**
3.12.01	Galvanising of steel components and accessories shall conform to IS:2629 , IS4759 & IS:2633. Additionally galvanising shall be uniform, clean smooth, continuous and free from acid spots.
3.12.02	The amount of zinc deposit over threaded portion of bolts, nuts, screws and washers shall be as per IS:1367 . The removal of extra zinc on threaded portion of components shall be carefully done to ensure that the threads shall have the required zinc coating on them as specified
3.13.00	**Welding**
3.13.01	The welding shall be carried out in accordance with IS:9595. All welding procedures and welders qualification shall also be followed strictly in line with IS:9595
4.00.00	**INSTALLATION**
4.01.00	**Cable tray and Support System Installation**
4.01.01	Cables shall run in cable trays mounted horizontally or vertically on cable tray support system which in turn shall be supported from floor, ceiling, overhead structures, trestles, pipe racks, trenches or other building structures.
4.01.02	Horizontally running cable trays shall be clamped by bolting to cantilever arms and vertically running cable trays shall be bolted to main support channel by suitable bracket/clamps on both top and bottom side rails at an interval of 2000 mm in general. For vertical cable risers/shafts cable trays shall be supported at an interval of 1000mm in general. Fixing of cable trays to cantilever arms or main support channel by welding shall not be accepted. Cable tray installation shall generally be carried out as per the approved guidelines/ drawings. Vendor shall design the support system along with tray, spacing etc in line with tray loadings/drawings.
4.01.03	The cantilever arms shall be positioned on the main support channel with a minimum vertical spacing of 300 mm unless otherwise indicated.
4.01.04	The contractor shall fix the brackets/ clamps/ insert plates using anchor fasteners. Minimum size of anchor fasteners shall be M 8 X 50 and material shall be stainless steel grade 316 or better. Anchor fastener shall be fixed as recommended by manufacturer and as approved by site engineer. For brick wall suitable anchor fasteners shall be used as per the recommendations of manufacturer. Make of anchor fasteners subject to QA approval and the same shall be finalized at pre-award stage.
4.01.05	All cable way sections shall have identification, designations as per cable way layout drawings and painted/stenciled at each end of cable way and where there is a branch connection to another cable way. Minimum height of letter shall be not less than 75 mm. For long lengths of trays, the identification shall be painted at every 10 meter. Risers shall additionally be painted/stenciled with identification numbers at every floor.
4.01.06	In certain cases it may be necessary to site fabricate portions of trays, supports and other non standard bends where the normal prefabricated trays, supports and accessories may not be suitable. Fabricated sections of trays, supports and accessories to make the

CLAUSE NO.	TECHNICAL REQUIREMENTS

installation complete at site shall be neat in appearance and shall match with the prefabricated sections in the dimensions. They shall be applied with one coat of red lead primer, one coat of oil primer followed by two finishing coats of aluminium paint.

4.02.00 **Conduits/Pipes/Ducts Installation**

4.02.01 The Contractor shall ensure for properly embedding conduit pipe sleeves wherever necessary for cabling work. All openings in the floor/roof/wall / cable tunnel/cable trenches made for conduit installation shall be sealed and made water proof by the Contractor.

4.02.02 GI pull wire of adequate size shall be laid in all conduits before installation. Metallic conduit runs at termination shall have two lock nuts wherever required for junction boxes etc.

4.02.03 Conduit runs/sleeves shall be provided with PVC bushings having round edge at each end. All conduits/pipes shall have their ends closed by caps until cables are pulled. After cables are pulled, the ends of conduits/pipes shall be sealed with Glass wool/Cement Mortar/Putty to prevent entrance of moisture and foreign material

4.02.04 Exposed conduit/pipe shall be adequately supported by racks, clamps, straps or by other approved means. Conduits /pipe support shall be installed square and true to line and grade with an average spacing between the supports as given below, unless specified otherwise

Conduit /pipe size (dia).	**Spacing**
Upto 40 mm	1 M
50 mm	2.0 M
65-85 mm	2.5 M
100 mm and above	3.0 M

4.02.05 For bending of conduits, bending machine shall be arranged at site by the contractor to facilitate cold bending. The bends formed shall be smooth.

4.03.00 **Junction Boxes Installation**

4.03.01 Junction boxes shall be mounted at a height of 1200mm above floor level or as specified in the drawings and shall be adequately supported/mounted on masonry wall by means of anchor fasteners/ expandable bolts or shall be mounted on an angle, plate or other structural supports fixed to floor, wall, ceiling or equipment foundations.

4.04.00 **Cable Installation**

4.04.01 Cable installation shall be carried out as per IS:1255 and other applicable standards.

4.04.02 For Cable unloading, pulling etc following guidelines shall be followed in general:

a) Cable drums shall be unloaded, handled and stored in an approved manner on hard and well drained surface so that they may not sink. In no case shall be drum be stored flat i.e. with flange horizontal. Rolling of drums shall be avoided as far as possible. For short distances, the drums may be rolled provided they are rolled slowly and in proper direction as marked on the drum. In absence of any indication, the drums may be rolled in the same direction as it was rolled during taking up the cables. For unreeling the cable, the drum shall be mounted on suitable jacks or on cable wheels and shall be rolled slowly so that cable comes out over the drum and not from below. All possible care shall be taken during unreeling and laying to avoid

CLAUSE NO.	TECHNICAL REQUIREMENTS
	damage due to twist, kink or sharp bends. Cable ends shall be provided with sealed plastic caps to prevent damage and ingress of moisture. b) While laying cable, ground rollers shall be used at every 2 meter interval to avoid cable touching ground. The cables shall be pushed over the rollers by a gang of people positioned in between the rollers. Cables shall not be pulled from the end without having intermediate pushing arrangements. Pulling tension shall not exceed the values recommended by cable manufacturer. Selection of cable drums for each run shall be so planned so as to avoid using straight through joints. Care should be taken while laying the cables so as to avoid damage to cables. If any particular cable is damaged, the same shall be repaired or changed to the satisfaction of Project Manager.
4.04.03	Cables shall be laid on cable trays strictly in line with cable schedule
4.04.04	Power and control cables shall be laid on separate tiers inline with the approved guidelines/drawings. The laying of different voltage grade cables shall be on different tiers according to the voltage grade of the cables. In horizontal tray stacks, H.T. cables shall be laid on top most tier and cables of subsequent lower voltage grades on lower tiers of trays. Single core cable in trefoil formation shall be laid with a distance of four times the diameter of cable between trefoil center lines and clamped at every two metre. All multicore cables shall be laid in touching formation. Power and control cables shall be secured fixed to trays/support with cable clamps/ties with self locking arrangement. For horizontal trays arrangements, multicore power cables and control cables shall be secured at every five meter interval. For vertical tray arrangement, individual multicore power cables and control cables shall be secured at every one meter. After completion of cable laying work in the particular vertical tray, all the control cables shall be binded to trays/supports by cable clamps/ties with self locking arrangement at every five meter interval and at every bend. Fibre Optical cable shall be laid in trenches/trays or as decided by Employer.
4.04.05	Bending radii for cables shall be as per manufacturer's recommendations and IS:1255.
4.04.06	Where cables cross roads/rail tracks, the cables shall be laid in hume pipe/ HDPE pipe.
4.04.07	No joints shall be allowed in trip circuits, protection circuits and CT/PT circuits. Also joints in critical equipment in main plant area shall not be permitted. Vendor shall identify and accordingly procure the cable drum length.
4.04.08	In each cable run some extra length shall be kept at suitable point to enable one LT/two HT straight through joints to made, should the cable develop fault at a later stage. Control cable termination inside equipment enclosure shall have sufficient lengths so that shifting of termination in terminal blocks can be done without requiring any splicing.
4.04.09	Wherever few cables are branching out from main trunk route troughs shall be used.
4.04.10	Wind loading shall be considered for designing support as well Cable trays wherever required.
4.04.11	Where there is a considerable risk of steam, hot oil or mechanical damage cable routes shall be protected by barriers or enclosures.
4.04.12	The installation work shall be carried out in a neat workman like manner & areas of work shall be cleaned of all scraps, water, etc. after the completion of work in each area every day. Contractor shall replace RCC/Steel trench covers after the Installation work in that particular area is completed or when further work is not likely to be taken up for some time.

CLAUSE NO.	TECHNICAL REQUIREMENTS

4.04.13 **Separation**

At least 300mm clearance shall be provided between:

- HT power & LT power cables,
- LT power & LT control/instrumentation cables,

4.04.14 **Segregation**

1) Segregation means physical isolation to prevent fire jumping.

2) All cables associated with the unit shall be segregated from cables of other units.

3) Interplant cables of station auxiliaries and unit critical drives shall be segregated in such a way that not more than half of the drives are lost in case of single incident of fire. Power and control cables for AC drives and corresponding emergency AC or DC drives shall be laid in segregated routes. Cable routes for one set of auxiliaries of same unit shall be segregated from the other set.

4) In switchyard, control cables of each bay shall be laid on separate racks/trays.

4.04.15 Minimum number of spare cores required to be left for interconnection in control cables shall be as follows:

Minimum number of spare cores required to be left for interconnection in control cables shall be as follows:

No. of cores in cable	No. of spare cores
2C,3C	NIL
5C	1
7C-10C	2
14C and above	3

4.04.16 **Directly Buried Cables**

a) Cable trenches shall be constructed for directly buried cables. Construction of cable trench for cables shall include excavation, preparation of sieved sand bedding, riddled soil cover, supply and installation of brick or concrete protective covers, back filling and compacting, supply and installation of route markers and joint markers. Laying of cables and providing protective covering shall be as per IS:1255 and the enclosed drawings showing cabling details.

b) RCC cable route and RCC joint markers shall be provided wherever required. The voltage grade of the higher voltage cables in route shall be engraved on the marker. Location of underground cable joints shall be indicated with cable marker with an additional inscription "Cable Joint". The marker shall project 150 mm above ground and shall be spaced at an interval of 30 meters and at every change in direction. They shall be located on both sides of road crossings and drain crossings. Top of cable marker/joint marker shall be sloped to avoid accumulation of water/dust on marker.

4.04.17 Cable tags shall be provided on all cables at each end (just before entering the equipment enclosure), on both sides of a wall or floor crossing, on each duct/conduit entry, and at

CLAUSE NO.	TECHNICAL REQUIREMENTS
	every 20 meters in cable tray/trench runs. Cable tags shall also be provided inside the switchgear, motor control centers, control and relay panels etc. where a number of cables enter together through a gland plate. Cable tag shall be of rectangular shape for power cables and control cables. Cable tag shall be of 2 mm thick aluminum with number punched on it and securely attached to the cable by not less than two turns of 20 SWG GI wire conforming to IS:280. Alternatively, the Contractor may also provide cable tags made of nylon, cable marking ties with cable number heat stamped on the cable tags. The cable tag requirements mentioned above shall prevail over Tag requirements mentioned elsewhere in this document for HT power, LT power & control cables.
4.04.18	While crossing the floors, unarmoured cables shall be protected in conduits upto a height of 500 mm from floor level if not laid in tray.
4.05.00	**Cable Terminations & Connections**
4.05.01	The termination and connection of cables shall be done strictly in accordance with cable termination kit manufacturer" instructions, drawings and/or as directed by Project Manager. Cable jointer shall be qualified to carryout satisfactory cable jointing/termination. Contractor shall furnish for review documentary evidence/experience reports of the jointers to be deployed at site.
4.05.02	Work shall include all clamps, fittings etc. and clamping, fitting, fixing, plumbing, soldering, drilling, cutting, taping, preparation of cable end, crimping of lug, insulated sleeving over control cable lugs, heat shrinking (where applicable), connecting to cable terminal, shorting and grounding as required to complete the job to the satisfaction of the Project Manager.
4.05.03	The equipment will be generally provided with undrilled gland plates for cables/conduit entry. The Contractor shall be responsible for punching of gland plates, painting and touching up. Holes shall not be made by gas cutting. The holes shall be true in shape. All cable entry points shall be sealed and made vermin and dust proof. Unused openings shall be effectively sealed by 2mm thick aluminium sheets.
4.05.04	Control cable cores entering control panel/switchgear/MCC/miscellaneous panels shall be neatly bunched, clamped and tied with self locking type nylon cable ties with de interlocking facility to keep them in position.
4.05.05	All the cores of the control cable to be terminated shall have identification by providing ferrules at either end of the core, each ferrule shall be indelible, printed single tube ferrule and shall include the complete wire number and TB number as per the drawings. The ferrule shall fit tightly on the core. Spare cores shall have similar ferrules with suffix sp1, sp2, ---etc along with cable numbers and coiled up after end sealing.
4.05.06	All cable terminations shall be appropriately tightened to ensure secure and reliable connections.
5.00.00	**EARTHING SYSTEM**
5.01.00	Earthing system shall be in strict accordance with IS:3043 and Indian Electricity Rules/Acts The earthing system shall be designed for a life expectancy of at least forty (40) years, for a system fault current of 50 kA for 1.0 sec. The minimum rate of corrosion of steel for selection of earthing conductor shall be 0.12mm per year.

SUB-SECTION-V-QE1

MOTORS

LOT-3 PROJECTS FLUE GAS DESULPHURISATION (FGD) SYSTEM PACKAGE	TECHNICAL SPECIFICATION SECTION-VI BID DOCUMENT NO.: CS-0011-109(3)-9

बीएचईएल BHEL	MANUFACTURER/ BIDDER/ SUPPLIER NAME & ADDRESS	STANDARD QUALITY PLAN .	SPEC. NO :	DATE:27.02.2020
		CUSTOMER :	QP NO.: PED-506-00-Q-006, REV-02	
		PROJECT:	PO NO.:	
		ITEM: AC ELECT. MOTORS UPTO 55KW (LV (415V)) / SYSTEM:	SECTION: II	SHEET 1 OF 2

Sl No.	Component & Operations	Characteristics	Class	Type of Check	Quantum Of check		Reference Document	Acceptance NORMS	FORMAT OF RECORD		AGENCY			
1	2	3	4	5	6		7	8	9	*	**			
					M	C/N				D	M	C	N	
1.0	ASSEMBLY	1.WORKMANSHIP	MA	VISUAL	100%	-	MFG. SPEC.	MFG. SPEC.	-DO-		P	-	-	
		2.DIMENSIONS	MA	-DO-	-DO-	-	MFG. DRG./ MFG. SPEC.	MFG. DRG./ MFG. SPEC.	-DO-		P	-	-	
		3.CORRECTNESS COMPLETENESS TERMINATIONS/ MARKING/COLOUR CODE	MA	VISUAL	100%	-	MFG.SPEC./	MFG.SPEC.	-DO-		P	-	-	
2.0	PAINTING	1.SHADE	MA	VISUAL	SAMPLE	-	MFG. SPEC/ APPROVED DATASHEET	SAME AS COL.7	LOG BOOK		P	-	-	
3.0	TESTS	1.ROUTINE TEST INCLUDING SPECIAL TEST	MA	-DO-	100%	100%	IS-325 / IS-12615/ APPROVED DATA SHEET	SAME AS COL.7	TEST/ INSPN. REPORT		P	W	W	NOTE -1 & NOTE-2
		2.OVERALL DIMENSIONS & ORIENTATION	MA	MEASUREMENT & VISUAL	100%	100%	APPROVED DRG/DATA SHEET	APPROVED DRG/DATA SHEET	TEST/ INSPN. REPORT		P	W	W	NOTE -1 & NOTE-2

BHEL					
ENGINEERING			QUALITY		
	Sign & Date	Name		Sign & Date	Name
Prepared by:	27/2/2020	Hema K	Checked by:		KUNAL GANDHI
Reviewed by:	02/3/2020	P. Dutta	Reviewed by:		

BIDDER/ SUPPLIER	
Sign & Date	
Seal	

FOR CUSTOMER REVIEW & APPROVAL			
Doc No:			
	Sign & Date	Name	Seal
Reviewed by:			
Approved by:			

बी एच ई एल BHEL	MANUFACTURER/ BIDDER/ SUPPLIER NAME & ADDRESS	STANDARD QUALITY PLAN	SPEC. NO :	DATE:27.02.2020
		CUSTOMER :	QP NO.: PED-506-00-Q-006, REV-02	
		PROJECT:	PO NO.:	
		ITEM: AC ELECT. MOTORS UPTO 55KW (LV (415V)) / SYSTEM:	SECTION: II	SHEET 2 OF 2

Sl No.	Component & Operations	Characteristics	Class	Type of Check	Quantum Of check		Reference Document	Acceptance NORMS	FORMAT OF RECORD		AGENCY			
1	2	3	4	5	6		7	8	9	*	**			
					M	C/N				D	M	C	N	
		3.NAMEPLATE DETAILS	MA	VISUAL	100%	100%	IS-325 / IS-12615 / APPROVED DATA SHEET	SAME AS COL.7	TEST/ INSPN. REPORT		P	W	W	
4.0	PACKING	SURFACE FINISH & COMPLETENESS	MA	VISUAL	100%	100%	AS PER MFG. STANDARD / APPROVED PACKING DRAWING.(#)	AS PER MFG. STANDARD / APPROVED PACKING DRAWING.(#).	INSPC. REPORT		P	W	-	(#) APPLICABLE FOR EXPORT JOBS

NOTES:

1 ROUTINE TESTS ON 100% MOTORS SHALL BE DONE BY THE VENDOR. HOWEVER, BHEL/CUSTOMER SHALL WITNESS ROUTINE TESTS ON RANDOM SAMPLES. THE SAMPLING PLAN SHALL BE MUTUALLY AGREED UPON

2 FOR EXHAUST/VENTILATION FAN MOTORS OF RATING UPTO 1.5KW , ONLY ROUTINE TEST CERTIFICATES SHALL BE FURNISHED FOR SCRUTINY.

3 IN CASE TEST CERTIFICATES FOR THESE TESTS ON SIMILAR TYPE, SIZE AND DESIGN OF MOTOR FROM INDEPENDENT LABORATORY ARE AVAILABLE, THESE TEST MAY NOT BE REPEATED.

4 BHEL RESERVES THE RIGHT TO PERFORM REPEAT TEST, IF REQUIRED.

5 AFTER PACKING AND PRIOR TO ISSUE MDCC, PHOTOGRAPHS OF ITEMS TO BE DESPATCHED SHALL BE SENT TO BHEL FOR REVIEW.

6 IN CASE , ANY CHANGES IN QP COMMENTED BY CUSTOMER AT CONTRACT STAGE SHALL BE CARRIED OUT BY BIDDER WITHOUT ANY IMPLICATION TO BHEL/ CUSTOMER.

LEGENDS:

*RECORDS, INDENTIFIED WITH "TICK"(√) SHALL BE ESSENTIALLY INCLUDED BY SUPPLIER IN QA DOCUMENTATION,
** M: SUPPLIER/ MANUFACTURER/ SUB-SUPPLIER, B: MAIN SUPPLIER/ BHEL/ THIRD PARTY INSPECTION AGENCY, C: CUSTOMER,
P: PERFORM, W: WITNESS, V: VERIFICATION, AS APPROPRIATE
MA: MAJOR, MI: MINOR, CR: CRITICAL
D: DOCUMENT

BHEL					
ENGINEERING			QUALITY		
	Sign & Date	Name		Sign & Date	Name
Prepared by:	02/3/2020	Hema K.	Checked by:	02/3/20	KUNAL GANDHI
Reviewed by:	02/3/2020	P. Dutta	Reviewed by:		

BIDDER/ SUPPLIER	
Sign & Date	
Seal	

FOR CUSTOMER REVIEW & APPROVAL			
Doc No:			
	Sign & Date	Name	Seal
Reviewed by:			
Approved by:			

बीएचईएल BHEL	MANUFACTURER/ BIDDER/ SUPPLIER NAME & ADDRESS	STANDARD QUALITY PLAN	SPEC. NO :	DATE:27.02.2020
		CUSTOMER :	QP NO.: PED-506-00-Q-007, REV-04	
		PROJECT:	PO NO.:	
		ITEM: AC ELECT. MOTORS 55 KW & ABOVE (LV (415V)) / SYSTEM:	SECTION: II	SHEET 1 OF 9

Sl No.	Component & Operations	Characteristics	Class	Type of Check	Quantum Of check		Reference Document	Acceptance NORMS	FORMAT OF RECORD		AGENCY			
1	2	3	4	5	6		7	8	9	*	**			
					M	C/N				D	M	C	N	
1.0	RAW MATERIAL & BOUGHT OUT CONTROL													
1.1	SHEET STEEL, PLATES, SECTION, EYEBOLTS	1.SURFACE CONDITION	MA	VISUAL	100%	-	-	FREE FROM BLINKS, CRACKS, WAVINESS ETC	LOG BOOK		P	-	-	
		2.DIMENSIONS	MA	MEASUREMENT	SAMPLE	-	MANUFACTURER'S DRG./SPEC	MANUFACTURER'S DRG./SPEC	-DO-		P	-	-	
		3.PROOF LOAD TEST (EYE BOLT)	MA	MECH. TEST	-DO-	-	-DO-	-DO-	TEST REPORT		P/V	-		
1.2	HARDWARES	1.SURFACE CONDITION	MA	VISUAL	100%	-		FREE FROM CRACKS, UN-EVENNESS ETC.	-DO-		P	-	-	
		2.PROPERTY CLASS	MA	VISUAL	SAMPLES	-	MANUFACTURER'S DRG./SPEC	MANUFACTURER'S DRG./SPEC	SUPPLIERS TC & LOG		P/V	-	-	PROPERTY CLASS MARKING SHALL BE CHECKED BY THE VENDOR
1.3	CASTING	1.SURFACE CONDITION	MA	VISUAL	100%	-		FREE FROM CRACKS, BLOW HOLES ETC.	LOG BOOK		P/V	-		
		2.CHEM. & PHY. PROP.	MA	CHEM & MECH TEST	1/HEAT NO.	-	MANUFACTURER'S DRG./SPEC	MANUFACTURER'S DRG./SPEC	SUPPLIER'S TC		P/V	-		HEAT NO. SHALL BE VERIFIED
		3.DIMENSIONS	MA	MEASUREMENT	100%	-	MANUFACTURER'S DRG.	MANUFACTURER'S DRG.	LOG BOOK		P/V	-		
1.4	PAINT & VARNISH	1.MAKE, SHADE, SHELF LIFE & TYPE	MA	VISUAL	100% CONTINUOUS	-	MANUFACTURER'S DRG./SPEC	MANUFACTURER'S DRG./SPEC	LOG BOOK		P/V	-		

BHEL					
ENGINEERING			QUALITY		
	Sign & Date	Name		Sign & Date	Name
Prepared by:	27/3/2020	Hema K.	Checked by:	27/3/20	Kuwar Gautam
Reviewed by:	27/3/2020	P. Dutta	Reviewed by:		

BIDDER/ SUPPLIER	
Sign & Date	
Seal	

FOR CUSTOMER REVIEW & APPROVAL			
Doc No:			
	Sign & Date	Name	Seal
Reviewed by:			
Approved by:			

बीएचईएल BHEL	MANUFACTURER/ BIDDER/ SUPPLIER NAME & ADDRESS	STANDARD QUALITY PLAN	SPEC. NO :	DATE:27.02.2020
		CUSTOMER :	QP NO.: PED-506-00-Q-007, REV-04	
		PROJECT:	PO NO.:	
		ITEM: AC ELECT. MOTORS 55 KW & ABOVE (LV (415V)) SYSTEM:	SECTION: II	SHEET 2 OF 9

Sl No.	Component & Operations	Characteristics	Class	Type of Check	Quantum Of check		Reference Document	Acceptance NORMS	FORMAT OF RECORD		AGENCY			
1	2	3	4	5	6		7	8	9	*	**			
					M	C/N				D	M	C	N	
1.5	SHAFT (FORGED OR ROLLED)	1. SURFACE COND.	MA	VISUAL	100%	-	-	FREE FROM VISUAL DEFECTS	-DO-		P	-	-	VENDOR'S APPROVAL IDENTIFICATION SHALL BE MAINTAINED
		2. CHEM. & PHYSICAL PROPERTIES	MA	CHEM. & PHYSICAL TESTS	1/HEAT NO. OR HEAT TREATMENT BATCH NO	-	MANUFACTURER'S DRG./ SPEC.	MANUFACTURER'S DRG./ STD.	SUPPLIER'S TC		P/V	-		
		3. DIMENSIONS	MA	MEASUREMENT	100%	-	-DO-	MANUFACTURER'S DRG.	LOG BOOK		P/V	-		
		4.INTERNAL FLAWS	CR	ULTRASONIC TEST	100%	100%	ASTM-A388	MANUFACTURER'S STD.	-DO-	✓	P/W	V	-	FOR DIA OF 55 MM & ABOVE
1.6	SPACE HEATERS, CONNECTORS, TERMINAL BLOCKS, CABLES, CABLE LUGS, CARBON BRUSH TEMP. DETECTORS, RTD, BTD'S	1. MAKE & RATING	MA	VISUAL	-DO-	-	MANUFACTURER'S DRG./STD.	MANUFACTURER'S DRG./STD.	-DO-		P/V	-	-	
		2. PHYSICAL COND.	MA	-DO-	-DO-	-	-	NO PHYS. DAMAGE, NO ELECTRICAL DISCONTINUITY	-DO-		P/V	-	-	
		3.DIMENSIONS (WHEREVER APPLICABLE)	MA	MEASUREMENT	SAMPLE	-	MANUFACTURER'S DRG./ STD	MANUFACTURER'S DRG. / STD.	-DO-		P/V	-	-	
		4.PERFORMANCE/ CALIBRATION	MA	TEST	100%	-	-DO-	-DO-	TEST REPORT		P/V	-	-	

BHEL					
ENGINEERING			QUALITY		
	Sign & Date	Name		Sign & Date	Name
Prepared by:	27/3/2020	Hema K.	Checked by:	27/3/20	KUNAL GANDHI
Reviewed by:	02/3/2020	P. Dutta	Reviewed by:		

BIDDER/ SUPPLIER	
Sign & Date	
Seal	

FOR CUSTOMER REVIEW & APPROVAL			
Doc No:			
	Sign & Date	Name	Seal
Reviewed by:			
Approved by:			

बी एच ई एल BHEL	MANUFACTURER/ BIDDER/ SUPPLIER NAME & ADDRESS	STANDARD QUALITY PLAN	SPEC. NO :	DATE:27.02.2020
		CUSTOMER :	QP NO.: PED-506-00-Q-007, REV-04	
		PROJECT:	PO NO.:	
		ITEM: AC ELECT. MOTORS 55 KW & ABOVE (LV (415V)) SYSTEM:	SECTION: II	SHEET 3 OF 9

Sl No.	Component & Operations	Characteristics	Class	Type of Check	Quantum Of check		Reference Document	Acceptance NORMS	FORMAT OF RECORD		AGENCY			
1	2	3	4	5	6		7	8	9	*	**			
					M	C/N				D	M	C	N	
1.7	OTHER INSULATING MATERIALS LIKE SLEEVES, BINDINGS CORDS, PAPERS, PRESS BOARDS ETC.	1. SURFACE COND. ETC.	MA	VISUAL	100%	-	-	NO VISUAL DEFECTS	TEST REPORT		P/V	-	-	
		2. OTHER CHARACTERISTICS	MA	TEST	SAMPLE	-	MANUFACTURER'S STD.	MANUFACTURER'S STD.	LOG BOOK AND OR SUPPLIER'S TC		P/V	-	-	
1.8	SHEET STAMPING (PUNCHED)	1. SURFACE COND.	MA	VISUAL	100%	-	-	NO VISUAL DEFECTS (FREE FROM BURS)	LOG BOOK		P	-	-	
		2.DIMENSIONS INCLUDING BURS HEIGHT	MA	MEASUREMENT	SAMPLE	-	MANUFACTURER'S DRG. .	MANUFACTURER'S DRG.	-DO-		P/V	-	-	
		3. ACCEPTANCE TESTS	MA	ELECT. & MECH TESTS	-DO-	-	MANUFACTURER'S DRG./ STD.	MANUFACTURER'S DRG./ STD.	SUPPLIER'S TC		P/V	-	-	
1.9	CONDUCTORS	1. SURFACE FINISH	MA	VISUAL	100%	-	-	FREE FROM VISUAL DEFECTS	LOG BOOK		*P/V	-	-	* MOTOR MANUFACTURER TO CONDUCT VISUAL CHECK FOR SURFACE FINISH ON RANDOM BASIS (10% SAMPLE) AT HIS WORKS AND MAINTAIN RECORD FOR VERIFICATION BY BHEL/CUSTOMER.
		2.ELECT. PROP. & MECH. PROP	MA	ELECT. & MECH TEST	SAMPLES	-	MANUFACTURER'S DRG./ SPEC.	MANUFACTURER'S / SPEC.	SUPPLIERS TC & VENDOR'S TEST REPORTS		P/V	-	-	

BHEL					
ENGINEERING			QUALITY		
	Sign & Date	Name		Sign & Date	Name
Prepared by:	27/3/2020	Hema K.	Checked by:	2/5/20	KUNAL GANDHI
Reviewed by:	02/5/2020	P. Dutta	Reviewed by:		

BIDDER/ SUPPLIER	
Sign & Date	
Seal	

FOR CUSTOMER REVIEW & APPROVAL			
Doc No:			
	Sign & Date	Name	Seal
Reviewed by:			
Approved by:			

बीएचईएल BHEL	MANUFACTURER/ BIDDER/ SUPPLIER NAME & ADDRESS	STANDARD QUALITY PLAN	SPEC. NO	DATE:27.02.2020
		CUSTOMER :	QP NO.: PED-506-00-Q-007, REV-04	
		PROJECT:	PO NO.:	
		ITEM: AC ELECT. MOTORS 55 KW & ABOVE (LV (415V)) / SYSTEM:	SECTION: II	SHEET 4 OF 9

Sl No.	Component & Operations	Characteristics	Class	Type of Check	Quantum Of check		Reference Document	Acceptance NORMS	FORMAT OF RECORD		AGENCY		
1	2	3	4	5	6		7	8	9	*	**		
					M	C/N				D	M	C	N
		3.DIMENSIONS	MA	MEASUREMENT	-DO-	-	-DO-	-DO-	Log Book		P/V	-	-
1.10	BEARINGS	1.MAKE & TYPE	MA	VISUAL	100%	-	MANUFACTURER'S DRG./ APPROVED DATASHEET	MANUFACTURER'S DRG./ APPROVED DATASHEET	-DO-		P/V	-	-
		2.DIMENSIONS	MA	MEASUREMENT	SAMPLE	-	APPROVED DATASHEET	APPROVED DATASHEET/ BEARING MANUF'S CATALOGUES	-DO-		P/V	-	-
		3.SURFACE FINISH	MA	VISUAL	100%	-	-	FREE FROM VISUAL DEFECTS	-DO-		P/V	-	-
1.11	SLIP RING (WHEREVER APPLICABLE)	1.SURFACE COND.	MA	VISUAL	100%	-	-	-DO-	-DO-		P	-	-
		2.DIMENSIONS	MA	MEASUREMENT	SAMPLE	-	MANUFACTURER'S DRG	MANUFACTURER'S DRG	-DO-		P	-	-
		3.TEMP.WITH-STAND CAPACITY	MA	ELECT.TEST	-DO-	-	MANUFACTURER'S STD./ APPROVED DATASHEET	MANUFACTURER'S STD./ APPROVED DATASHEET	-DO-		P/V	-	-
		4.HV/IR	MA	-DO-	100%	-	-DO-	-DO-	-DO-		P/V	-	-
1.12	OIL SEALS & GASKETS	1.MATERIAL OF GASKET	MA	VISUAL	100%	-	MANUFACTURER'S DRG/SPECS	MANUFACTURER'S DRG./ SPECS.	-DO-		P	-	-
		2.SURFACE COND.	MA	VISUAL	100%	-	-	FREE FROM VISUAL DEFECTS	-DO-		P	-	-
		3.DIMENSIONS	MA	MEASUREMENT	SAMPLE	-	MANUFACTURER'S DRG	MANUFACTURER'S DRG	-DO-		P	-	-

BHEL					
ENGINEERING			QUALITY		
	Sign & Date	Name		Sign & Date	Name
Prepared by:	2/3/2020	Hema K.	Checked by:	2/3/20	KUNAL GANDOZ
Reviewed by:	02/3/2020	P. Dutta	Reviewed by:		

BIDDER/ SUPPLIER	
Sign & Date	
Seal	

FOR CUSTOMER REVIEW & APPROVAL			
Doc No:			
	Sign & Date	Name	Seal
Reviewed by:			
Approved by:			

बीएच ई एल BHEL	MANUFACTURER/ BIDDER/ SUPPLIER NAME & ADDRESS	STANDARD QUALITY PLAN	SPEC. NO :	DATE:27.02.2020
		CUSTOMER :	QP NO.: PED-506-00-Q-007, REV-04	
		PROJECT:	PO NO.:	
		ITEM: AC ELECT. MOTORS 55 KW & ABOVE (LV (415V)) / SYSTEM:	SECTION: II	SHEET 5 OF 9

Sl No.	Component & Operations	Characteristics	Class	Type of Check	Quantum Of check		Reference Document	Acceptance NORMS	FORMAT OF RECORD		AGENCY			
1	2	3	4	5	6		7	8	9	*	**			
					M	C/N				D	M	C	N	
2.0	IN PROCESS													
2.1	STATOR FRAME WELDING (IN CASE OF FABRICATED STATOR)	1.WORKMANSHIP & CLEANNESS	MA	VISUAL	100%	-	-DO-	GOOD FINISH	LOG BOOK		P/W	-	-	
		2.DIMENSIONS	MA	MEASUREMENT	-DO-	-	MANUFACTURER'S DRG	MANUFACTURER'S DRG	-DO-		P	-	-	
2.2	MACHINING	1.FINISH	MA	VISUAL	100%	-	-DO-	GOOD FINISH	LOG BOOK		P	-	-	
		2.DIMENSIONS	MA	MEASUREMENT	-DO-	-	MANUFACTURER'S DRG	MANUFACTURER'S DRG	-DO-		P	-	-	
		3.SHAFT SURFACE FLOWS	MA	PT	100%	100%	MANUFACTURER'S STD./ ASTM-E165	MANUFACTURER'S STD./ APPROVED DATASHEET.	-DO-	✓	P	V	-	
2.3	PAINTING	1.SURFACE PREPARATION	MA	VISUAL	100%	-	MANUFACTURER'S STD./APPROVED DATASHEET	SAME AS COL.7	LOG BOOK		P	-	-	
		2.PAINT THICKNESS (BOTH PRIMER & FINISH COAT)	MA	MEASUREMENT BY ELCOMETER	SAMPLE	-	-DO-	-DO-	-DO-		P	-	-	
		3.SHADE	MA	VISUAL	-DO-	-	-DO-	-DO-	LOG BOOK		P	-	-	
		4.ADHESION	MA	CROSS CUTTING & TAPE TEST	-DO-	-	-DO-	-DO-	LOG BOOK		P	-	-	

BHEL					
ENGINEERING			QUALITY		
	Sign & Date	Name		Sign & Date	Name
Prepared by:	27/3/2020	Hema R.	Checked by:	28/3/20	KUNAL GANDHI
Reviewed by:	02/3/2020	P. Dutta	Reviewed by:		

BIDDER/ SUPPLIER	
Sign & Date	
Seal	

FOR CUSTOMER REVIEW & APPROVAL			
Doc No:			
	Sign & Date	Name	Seal
Reviewed by:			
Approved by:			

बी एच ई एल BHEL	MANUFACTURER/ BIDDER/ SUPPLIER NAME & ADDRESS	STANDARD QUALITY PLAN	SPEC. NO :	DATE:27.02.2020
		CUSTOMER :	QP NO.: PED-506-00-Q-007, REV-04	
		PROJECT:	PO NO.:	
		ITEM: AC ELECT. MOTORS 55 KW & ABOVE (LV (415V)) SYSTEM:	SECTION: II	SHEET 6 OF 9

Sl No.	Component & Operations	Characteristics	Class	Type of Check	Quantum Of check		Reference Document	Acceptance NORMS	FORMAT OF RECORD		AGENCY			
1	2	3	4	5	6		7	8	9	*	**			
					M	C/N				D	M	C	N	
2.4	SHEET STACKING	1.COMPLETENESS	MA	MEASUREMENT	SAMPLE	-	MANUFACTURER'S STD.	MANUFACTURER'S STD.	LOG BOOK		P	-	-	
		2.COMPRESSION & TIGHTENING	MA	MEASUREMENT	100%	-	-DO-	-DO-	LOG BOOK		P	-	-	
2.5	WINDING	1.COMPLETENESS	CR	VISUAL	100%	-	MANUFACTURER'S STD./APPROVED DATASHEET	MANUFACTURER'S STD./APPROVED DATASHEET	LOG BOOK		P	-	-	
		2.CLEANLINESS	CR	-DO-	-DO-	-	-DO-	-DO-	LOG BOOK		P	-	-	
		3.IR-HV-IR	CR	ELECT. TEST	100%	100%	IS-325/IS-12615/IEC-60034 PART-1	IS-325/IS-12615/IEC-60034 PART-1	LOG BOOK	✓	P	V	-	
		4.RESISTANCE	CR	-DO-	100%	100%	IS-325/IS-12615/IEC-60034 PART-1	IS-325/IS-12615/IEC-60034 PART-1	LOG BOOK	✓	P	V	-	
		5.INTERTURN INSULATION	CR	-DO-	-DO-	-	-DO-	-DO-	LOG BOOK		P	-	-	
2.6	IMPREGNATION	1.VISCOSCITY	MA	PHY. TEST	AT STARTING	-	MANUFACTURER'S STANDARD	MANUFR'S STANDARD	LOG BOOK		P	-	-	
		2.TEMP. PRESSURE VACCUM	MA	PROCESS CHECK	CONTINUOUS	-	MANUFACTURER'S STANDARD	MANUFACTURER'S STANDARD	LOG BOOK		P	-	-	
		3.NO. OF DIPS	MA	-DO-	CONTINUOUS	CONTINUOUS	MANUFACTURER'S STANDARD	MANUFACTURER'S STANDARD	LOG BOOK	✓	P	V	-	THREE DIPS TO BE GIVEN

BHEL					
ENGINEERING			QUALITY		
	Sign & Date	Name		Sign & Date	Name
Prepared by:	2/3/2020	Hema K.	Checked by:	2/3/20	KUNAL GANDHI
Reviewed by:	02/3/2020	P. Dutta	Reviewed by:		

BIDDER/ SUPPLIER	
Sign & Date	
Seal	

FOR CUSTOMER REVIEW & APPROVAL			
Doc No:			
	Sign & Date	Name	Seal
Reviewed by:			
Approved by:			

बीएचईएल BHEL	MANUFACTURER/ BIDDER/ SUPPLIER NAME & ADDRESS	STANDARD QUALITY PLAN	SPEC. NO:	DATE:27.02.2020
		CUSTOMER :	QP NO.: PED-506-00-Q-007, REV-04	
		PROJECT:	PO NO.:	
		ITEM: AC ELECT. MOTORS 55 KW & ABOVE (LV (415V)) SYSTEM:	SECTION: II	SHEET 7 OF 9

Sl No.	Component & Operations	Characteristics	Class	Type of Check	Quantum Of check		Reference Document	Acceptance NORMS	FORMAT OF RECORD		AGENCY		
1	2	3	4	5	6		7	8	9	*	**		
					M	C/N				D	M	C	N
		4.DURATION	MA	-DO-	CONTINUOUS	CONTINUOUS	-DO-	-DO-	LOG BOOK	✓	P	V	-
2.7	COMPLETE STATOR ASSEMBLY	1.COMPACTNESS & CLEANLINESS	MA	VISUAL	100%	-	-DO-	-DO-	LOG BOOK		P	-	-
2.8	BRAZING/COMPRESSION JOINT	1.COMPLETENESS	CR	-DO-	-DO-	-	-DO-	-DO-	LOG BOOK		P	-	-
		2.SOUNDNESS	CR	MALLET TEST & UT	100%	100%	-DO-	-DO-	LOG BOOK	✓	P	V	-
		3.HV	MA	ELECT. TEST	100%	100%	-DO-	-DO-	LOG BOOK	✓	P	V	-
2.9	COMPLETE ROTOR ASSEMBLY	1.RESIDUAL UNBALANCE	CR	DYN. BALANCE	-DO-	-	MANUFACTURER'S SPEC./ ISO 1940	MANUFACTURER'S DWG.	LOG BOOK		P	-	-
		2.SOUNDNESS OF DIE CASTING	CR	ELECT. (GROWLER TEST)	100%	100%	MANUFACTURER'S SPEC.	MANUFACTURER'S SPEC.	LOG BOOK	✓	P	V	-
2.10	ASSEMBLY	1.ALIGNMENT	MA	MEAS.	-DO-	-	-DO-	-DO-	LOG BOOK		P	-	-
		2.WORKMANSHIP	MA	VISUAL	-DO-	-	-DO-	-DO-	LOG BOOK		P	-	-
		3.AXIAL PLAY	MA	MEAS.	100%	100%	-DO-	-DO-	LOG BOOK	✓	P	V	-
		4.DIMENSIONS	MA	-DO-	-DO-	-	MANUFACTURER'S DRG./ MANUFACTURER'S SPEC.	MANUFACTURER'S DRG/ RELEVANT IS	LOG BOOK		P	-	-
		5.CORRECTNESS, COMPLETENESS TERMINATIONS/ MARKING/ COLOUR CODE	MA	VISUAL	100%	-	MANUFACTURER'S SPEC.	MANUFACTURER'S SPEC.	LOG BOOK		P	-	-
		6. RTD, BTD & SPACE HEATER MOUNTING.	MA	VISUAL	100%	100%	MANUFACTURER'S SPEC.	MANUFACTURER'S SPEC.	LOG BOOK	✓	P	V	-

BHEL					
ENGINEERING			QUALITY		
	Sign & Date	Name		Sign & Date	Name
Prepared by:	27/3/2020	Hema K.	Checked by:	27/3/20	KUNAL GANDHI
Reviewed by:	02/3/2020	P. Dutta	Reviewed by:		

BIDDER/ SUPPLIER	
Sign & Date	
Seal	

FOR CUSTOMER REVIEW & APPROVAL			
Doc No:			
	Sign & Date	Name	Seal
Reviewed by:			
Approved by:			

बीएचईएल BHEL	MANUFACTURER/ BIDDER/ SUPPLIER NAME & ADDRESS	STANDARD QUALITY PLAN	SPEC. NO:	DATE:27.02.2020
		CUSTOMER :	QP NO.: PED-506-00-Q-007, REV-04	
		PROJECT:	PO NO.:	
		ITEM: AC ELECT. MOTORS 55 KW & ABOVE (LV (415V)) / SYSTEM:	SECTION: II	SHEET 8 OF 9

Sl No.	Component & Operations	Characteristics	Class	Type of Check	Quantum Of check		Reference Document	Acceptance NORMS	FORMAT OF RECORD		AGENCY			
1	2	3	4	5	6		7	8	9	*	**			
					M	C/N				D	M	C	N	
3.0	TESTS	1.TYPE TESTS INCLUDING SPECIAL TESTS	MA	ELECT.TEST	1/TYPE/SIZE	1/TYPE/SIZE	IS-325//IS-12615/APPROVED DATASHEET	IS-325/IS-12615/APPROVED DATASHEET	TEST REPORT		P	W*	W*	* NOTE - 1
		2.ROUTINE TESTS INCLUDING SPECIAL TEST	MA	-DO-	100%	100%	-DO-	-DO-	-DO-		P	V/W[1]	V/W[1]	[1] NOTE - 2
		3.VIBRATION & NOISE LEVEL	MA	-DO-	100%	100%	IS: 12075 / IEC 60034-14 & IS-12065	IS: 12075 / IEC 60034-14 & IS-12065	-DO-		P	V/W[1]	V/W[1]	[1] NOTE - 2
		4.OVERALL DIMENSIONS AND ORIENTATION	MA	MEASUREMENT & VISUAL	100%	100%	APPROVED DRG/DATA SHEET	APPROVED DRG/DATA SHEET &	TEST/INSPC. REPORT		P	W	-	
		5.DEGREE OF PROTECTION	MA	ELECT. & MECH. TEST	1/TYPE/ SIZE	1/TYPE/ SIZE	IEC 60034-5/IS-12615	APPROVED DATASHEET	TC	✓	P	V	V	TC FROM AN INDEPENDENT LABORATORY, REFER NOTE-3
		6. MEASUREMENT OF RESISTANCE OF RTD & BTD	MA	-DO-	100%	100%	IS-325//IS-12615/IEC-60034 PART-1/IS: 12802	IS-325/IS-12615/IEC-60034 PART-1/IS: 12802	-DO-		P	V/W[1]	V/W[1]	[1] NOTE - 2
		7. MEASUREMENT OF RESISTANCE, IR OF SPACE HEATER	MA	-DO-	100%	100%	IS-325//IS-12615/IEC-60034 PART-1	IS-325/IS-12615/IEC-60034 PART-1	-DO-		P	V/W[1]	V/W[1]	[1] NOTE - 2
		8. NAME PLATE DETAILS	MA	VISUAL	100%	100%	IS-325//IS-12615& DATA SHEET	IS-325//IS-12615 & DATA SHEET	TEST/INSPC. REPORT		P	V/W[1]	V/W[1]	[1] NOTE - 2
		9.EXPLOSION FLAME PROOF NESS (IF SPECIFIED)	MA	EXPLOSION FLAME PROOF TEST	1/TYPE	1/TYPE	IS 2148 / IEC 60079-1	IS 2148 / IEC 60079-1	TC	✓	P	V	V	TC FROM AN INDEPENDENT LABORATORY, REFER NOTE-3
		10. PAINT SHADE, THICKNESS & FINISH	MA	VISUAL & MEASUREMENT BY ELKOMETER	SAMPLE	SAMPLE	APPROVED DATASHEET	APPROVED DATASHEET	TC		P	W$	W$	SAMPLING PLAN TO BE DECIDED BY INSPECTION AGENCY [$] NOTE - 2

BHEL					
ENGINEERING			QUALITY		
	Sign & Date	Name		Sign & Date	Name
Prepared by:	3/2/2020	Prem K	Checked by:	3/2/20	Kunal Gaikwad
Reviewed by:	03/2/2020	P. Dubey	Reviewed by:		

BIDDER/ SUPPLIER	
Sign & Date	
Seal	

FOR CUSTOMER REVIEW & APPROVAL			
Doc No:			
	Sign & Date	Name	Seal
Reviewed by:			
Approved by:			

बीएचईएल BHEL	MANUFACTURER/ BIDDER/ SUPPLIER NAME & ADDRESS	STANDARD QUALITY PLAN	SPEC. NO :	DATE:27.02.2020
		CUSTOMER :	QP NO.: PED-506-00-Q-007, REV-04	
		PROJECT:	PO NO.:	
		ITEM: AC ELECT. MOTORS 55 KW & ABOVE (LV (415V)) / SYSTEM:	SECTION: II	SHEET 9 OF 9

Sl No.	Component & Operations	Characteristics	Class	Type of Check	Quantum Of check		Reference Document	Acceptance NORMS	FORMAT OF RECORD		AGENCY			
1	2	3	4	5	6		7	8	9	*	**			
					M	C/N				D	M	C	N	
4.0	PACKING	SURFACE FINISH & COMPLETENESS	MA	VISUAL	100%	100%	AS PER MANUFACT. STANDARD / APPROVED CROSS SECTION DRAWING.	AS PER MANUFACT. STANDARD / APPROVED CROSS SECTION DRAWING.	INSPC. REPORT		P	W	-	IF APPLICABLE, REFER SEAWORTHY PACKING ALSO.

NOTES:

1 DEPENDING UPON THE SIZE AND CRITICALLY, WITNESSING BY BHEL SHALL BE DECIDED.

2 ROUTINE TESTS ON 100% MOTORS SHALL BE DONE BY THE VENDOR. HOWEVER, BHEL/CUSTOMER SHALL WITNESS ROUTINE TESTS ON RANDOM SAMPLES. THE SAMPLING PLAN SHALL BE MUTUALLY AGREED UPON.

3 IN CASE TEST CERTIFICATES FOR THESE TESTS ON SIMILAR TYPE, SIZE AND DESIGN OF MOTOR FROM INDEPENDENT LABORATORY ARE AVAILABLE, THESE TEST MAY NOT BE REPEATED.

4 BHEL RESERVES THE RIGHT TO PERFORM REPEAT TEST, IF REQUIRED.

5 AFTER PACKING AND PRIOR TO ISSUE MDCC, PHOTOGRAPHS OF ITEMS TO BE DESPATCHED SHALL BE SENT TO BHEL PURCHASE GROUP FOR REVIEW.

6 IN CASE , ANY CHANGES IN QP COMMENTED BY CUSTOMER AT CONTRACT STAGE SHALL BE CARRIED OUT BY BIDDER WITHOUT ANY IMPLICATION TO BHEL/ CUSTOMER.

LEGENDS:

*RECORDS, INDENTIFIED WITH "TICK"(√) SHALL BE ESSENTIALLY INCLUDED BY SUPPLIER IN QA DOCUMENTATION,

** M: SUPPLIER/ MANUFACTURER/ SUB-SUPPLIER, B: MAIN SUPPLIER/ BHEL/ THIRD PARTY INSPECTION AGENCY, C: CUSTOMER,

P: PERFORM. W: WITNESS. V: VERIFICATION. AS APPROPRIATE

MA: MAJOR, MI: MINOR, CR: CRITICAL

D: DOCUMENT

BHEL					
ENGINEERING			QUALITY		
	Sign & Date	Name		Sign & Date	Name
Prepared by:	2/3/2020	Hema K.	Checked by:	2/3/20	KUNAL GANDHI
Reviewed by:	02/3/2020	P. Dubey	Reviewed by:		

BIDDER/ SUPPLIER	
Sign & Date	
Seal	

FOR CUSTOMER REVIEW & APPROVAL			
Doc No:			
	Sign & Date	Name	Seal
Reviewed by:			
Approved by:			

CLAUSE NO.	QUALITY ASSURANCE	

MOTOR

TEMS/COMPONENTS \ TESTS/CHECKS	Visual	Dimensional	Make/Type/Rating /General Physical Inspection	Mech/Chem. Properties	NDT /DP/MPI/UT	Metallography	Electrical Characteristics	Welding/Brazing(WPS/PQR)	Heat Treatment	Magnetic Characteristics	Hydraulic/Leak/Pressure Test	Thermal Characteristics	Run out	Dynamic Balancing	Routine & Acceptance tests as per IS-325/IS-4722 /IS- 9283/IS 2148/IEC60034\IEC 60079-I/ IS-12615	Vibration	Over speed	Tan delta, shaft voltage & polarization index test	Paint shade, thickness & adhesion
Plates for stator frame, end shield, spider etc.	Y	Y	Y	Y	Y				Y										
Shaft	Y	Y	Y	Y	Y	Y			Y										
Magnetic Material	Y	Y	Y	Y			Y			Y		Y							
Rotor Copper/Aluminium	Y	Y	Y	Y			Y		Y										
Stator copper	Y	Y	Y	Y			Y		Y			Y							
SC Ring	Y	Y	Y	Y	Y		Y	Y	Y										
Insulating Material	Y		Y	Y			Y					Y							
Tubes, for Cooler	Y	Y	Y	Y	Y				Y		Y								
Sleeve Bearing	Y	Y	Y	Y	Y				Y		Y								
Stator/Rotor, Exciter Coils	Y	Y	Y				Y	Y											
Castings, stator frame, terminal box and bearing housing etc.	Y	Y	Y	Y	Y			Y											
Fabrication & machining of stator, rotor, terminal box	Y	Y			Y			Y	Y										

CLAUSE NO.	QUALITY ASSURANCE

Wound stator	Y	Y					Y	Y											
Wound Exciter	Y	Y					Y	Y											
Rotor complete	Y	Y					Y						Y	Y					
Exciter, Stator, Rotor, Terminal Box assembly	Y	Y					Y												
Accessories, RTD, BTD,CT, Space heater, antifriction bearing, gaskets etc.	Y	Y	Y																
Complete Motor	Y	Y	Y												Y	Y	Y	Y1	Y

Note: 1. This is an indicative list of tests/checks. The manufacture is to furnish a detailed Quality Plan indicating the practices & Procedure followed along with relevant supporting documents during QP finalization. However, No QP for LT motor upto 50KW.

2. Additional routine tests for Flame proof motors shall be applicable as per relevant standard
3. Makes of major bought out items for HT motors will be subject to NTPC approval.
4. Y1 = for HT Motor / Machines only.

BHEL	TITLE : ELECTRICAL EQUIPMENT SPECIFICATION FOR LIME DOSING/FEEDING SYSTEM KORBA STPP, STAGE-I,II & III	SPECIFICATION NO.
		VOLUME NO. : **II-B**
		SECTION :
		REV NO. **00** : DATE : 23.05.2020
		SHEET : 1 OF 1

DATASHEET-A

ANNEXURE-I

1.0	Design ambient temperature	:	50 ºC
2.0	Maximum acceptable kW rating of LV motor	:	200KW *
3.0	Installation (Indoors/ Outdoors)	:	As required
4.0	Details of supply system		
	a) Rated voltage (with variation)	:	415V ± 10%
	b) Rated frequency (with variation)	:	50 Hz + 3 % to - 5%
	c) Combined voltage & freq. variation	:	10% (sum of absolute values)
	d) System fault level at rated voltage	:	50 kA for 1 sec
	e) Short time rating for terminal boxes		
	○ 110 kW and above (Breaker Controlled)	:	50 KA for 0.25 sec.
	○ Below 110 kW (Contactor Controlled)	:	50 KA protected by HRC fuse
	f) LV System grounding	:	Solidly
5.0	Winding & Insulation	:	Class F with temp rise limited to class B
6.0	Minimum voltage for starting (As percentage of rated voltage)	:	85% for motor ratings below 110kW 80% for motor ratings from 110kW to 200kW.
7.0	Power cables data	:	Shall be given during detailed engg.
8.0	Earth Conductor Size & Material	:	Shall be given during detailed engg.
9.0	Space heater supply (for motors >=30kw)	:	240 V, 1ϕ, 50 Hz
10.0	Rating up to which Single phase motor	:	Acceptable below 0.2 kW
11.0	Locked rotor current		
	a) Limit as percentage of FLC	:	As per IS 12615
12.0	Makes	:	BHEL/ Customer approval (Package owner to take care)
13.0	Paint shade	:	Blue (RAL 5012) – Corrosion proof
14.0	Degree Of protection for motor/ terminal box	:	Degree of protection for various enclosures as per IEC60034-05 shall be as follows:-

i) Indoor motors - IP 54
ii) Outdoor motors - IP 55
iii) Cable box-indoor area - IP 54
iv) Cable Box-Outdoor area - IP 55

* **LT motors of continuous duty shall be energy efficient IE3 class conforming to IS-12615**

15.0 TESTING REQUIREMENTS: IN LINE WITH SPECIFICATION

DATASHEET-C

CLAUSE NO.	Bidder's Name ……..

DE-1B	**LT MOTORS**	
A.	**GENERAL**	
5.	Manufacturer & Country of origin. (Shall be as per approved QA make)	
6.	Equipment driven by motor	
7.	Motor type	
8.	Quantity	
B.	**DESIGN AND PERFORMANCE DATA**	
18.	Frame size	
19.	Type of duty	
20.	Type of enclosure /Method of cooling/ Degree of	
21.	Applicable standard to which motor generally	
22.	Efficiency class as per IS 12615	
23.	(a)Whether motor is flame proof	Yes/No
	(b)If yes, the gas group to which it conforms as per IS:2148	
24.	Type of mounting	
25.	Direction of rotation as viewed from DE END	
26.	Standard continuous rating at 40 deg.C. ambient temp. as per Indian Standard (KW)	
27.	Derated rating for specified normal condition i.e. 50 deg. C ambient temperature (KW)	
28.	Maximum continuous load demand of driven	
29.	Rated Voltage (volts)	
30.	Permissible variation of :	
	a. Voltage (Volts)	
	b. Frequency (Hz)	
	c. Combined voltage and frequency	
31.	Rated speed at rated voltage and	
32.	At rated Voltage and frequency:	
	a. Full load current	

CLAUSE NO.	Bidder's Name ……..

	b. No load current	
33.	Power Factor at	
	a. 100% load	
	b. NO load	
	c. Starting.	
34.	Efficiency at rated voltage and frequrecy,	
	a.100% load	
	b. 75% load	
	c. 50% load	
35.	Starting current (amps) at	
	a. 100 % voltage	
	b. 85% voltage	
	c. 80% voltage	
36.	Minimum permissible starting Voltage (Volts)	
37.	Starting time with minimum permissible voltage	
	a. Without driven equipment coupled	
	b. With driven equipment coupled	
38.	Safe stall time with 100% and 110% of rated	
	a. From hot condition	
	b. From cold condition	
39.	Torques :	
	a. Starting torque at min. permissible voltage(kg-	
	b. Pull up torque at rated voltage.	
	c. Pull out torque	
	d. Min accelerating torque (kg.m) available	
	e.Rated torque (kg.m)	
40.	Stator winding resistance per phase (ohms at 20	
41.	GD^2 value of motors	

CLAUSE NO.	Bidder's Name ……..

42.	No of permissible successive starts when motor is in hot condition	
43.	Locked Rotor KVA Input	
44.	Locked Rotor KVA/KW	
45.	Vibration limit :Velocity (mm/s)	
46.	Noise level limit (dBA)	
C.	**CONSTRUCTIONAL FEATURES**	
1.	Stator winding insulation	
	a. Class & Type	
	b. Winding Insulation Process	
	c. Tropicalised (Yes/No)	
	d. Temperature rise over specified maximum ambient temperature of 50 deg C	
	e. Method of temperature measurement	
	f. Stator winding connection	
2.	Main Terminal Box	
	a. Type	
	b. Location(viewed from NDE side)	
	c. Entry of cables(bottom/side)	
	d. Recommended cable size(To be matched with cable size envisaged by owner)	
	e. Fault level (MVA),Fault level duration(sec)	
	f. Cable glands & lugs details (shall be suitable for	
3.	Type of DE/NDE Bearing	
4.	Motor Paint shade	
5.	Weight of	
	a. Motor stator (KG)	
	b. Motor Rotor (KG)	
	c. Total weight (KG)	

CLAUSE NO.	Bidder's Name ……..

D.	**List of accessories.**	
1. 3.	Space Heaters (Applicable for 30 KW & above motor) (Nos./Power in watts/supply voltage)	
2.	Terminal Box for Space Heater (Yes/No)	
3.	Speed switch (Yes/No)	
4.	Insulation of bearing (Yes/No)	
5.	Noise reducer(Yes/No)	
6.	Grounding pads	
	i) No and size on motor body	
	ii) Nos on terminal Box	
7.	Vibration pads	
	i) Nos and size	
	ii) Location	
8.	Any other fitments	
E.	**List of curves.**	
1.	Torque speed characteristic of the motor	
2.	Thermal withstand characteristic	
3.	Starting. current Vs. Time	
4.	Starting. current Vs speed	
5.	P.F. and Effi. Vs Load	
F.	**Additional Data to be filled for each rating of DC Motor**	
1.	Rated armature voltage (Volt)	
2.	Rated field excitation (Amp)	
3.	Permissible % variation in voltage	
4.	Minimum Permissible Starting voltage (volt)	
5.	At rated voltage	
	i)Full load Armature current.(Amp)	

CLAUSE NO.	Bidder's Name ……..

	ii)Full load Field current (Amp)	
	iii)No load Armature current (Amp)	
6.	Full load Field current (Amp)	
7.	No load Aramature current (Amp)	
8.	Minimum permissible field current(Amp) to avoid	
	i) Maximum permissible voltage	
	ii) Rated voltage	
	iii) Minimum Permissible Voltage	
9.	Resistance (indicative Values) in ohm	
	i)Armature winding(Arm + IP + Series) at 25	
	ii) Field Winding at 25 deg. C	
10..	Inductance (indicative values)	
	i) Armature winding	
	ii) Field winding	
11	Value of trimmer resistance (ohm) to be connected in series with the shunt field to	
	i) 220 V DC	
	ii) 250 V DC	
	iii) 187 V DC	
12	Value of the external resistance (ohm)required to be connected in series with armature during starting only	
13	Technical data sheet for external resistance box	
14	GA drawing of motor	
15	Starting time calculation	
16	Starter resistance design calculation	
17	Electrical connection diagram of motor	

ANNEXURE-X

LOAD TITLE	RATING (KW / A)		UNIT (U)/STN (S)	Nos.		VOLTAGE CODE*	FEEDER CODE**	EMER. LOAD (Y)	CONT.(C)/ INTT.(I)	STARTING TIME >5 SEC (Y)	LOCATION	BOARD NO.	CABLE		BLOCK CABLE DRG. No.	CONTROL CODE	REMARKS	LOAD No.
	NAME PLATE	MAX. CONT. DEMAND (MCR)		RUNNING	STANDBY								SIZE CODE	NOs				
1	2	3	4	5	6	7	8	9	10	11	12	13	14	15	16	17	18	19

NOTES:
1. COLUMN 1 TO 12 & 18 SHALL BE FILLED BY THE REQUISITIONER (ORIGINATING AGENCY); REMAINING COLUMNS ARE TO BE FILLED UP BY PEM (ELECTRICAL)/ CUSTOMER
2. ABBREVIATIONS : * VOLTAGE CODE (7):- (ac) A=11 KV, B=6.6 KV, C=3.3 KV, D=415 V, E=240 V (1 PH), F=110 V (cc): G=220 V, H=110 V, J=48 V, K=+24V, L=-24 V
: ** FEEDER CODE (8):- U=UNIDIRECTIONAL STARTER, B=BI-DIRECTIONAL STARTER, S=SUPPLY FEEDER, D=SUPPLY FEEDER (CONTACTER CONTROLLED)

LOAD DATA (ELECTRICAL)	JOB NO.	466	ORIGINATING AGENCY		PEM (ELECTRICAL)	
	PROJECT TITLE	KORBA STPP STAGE-I,II & III	NAME		DATA FILLED UP ON	
	SYSTEM	LIME DOSING/FEEDING SYSTEM	SIGN.		DATA ENTERED ON	
	DEPTT. / SECTION	MAUX	SHEET 1 OF 1	REV. 00	DE'S SIGN. & DATE	

12319/2020/PS-PEM-MAX

CABLE LISTING FORMAT

ANNEXURE-III

CABLE ID	FROM	TO	PURPOSE	CABLE SCOPE (BHEL PEM/VENDOR)	REMARKS	CABLE SIZE	PATH CABLE NO

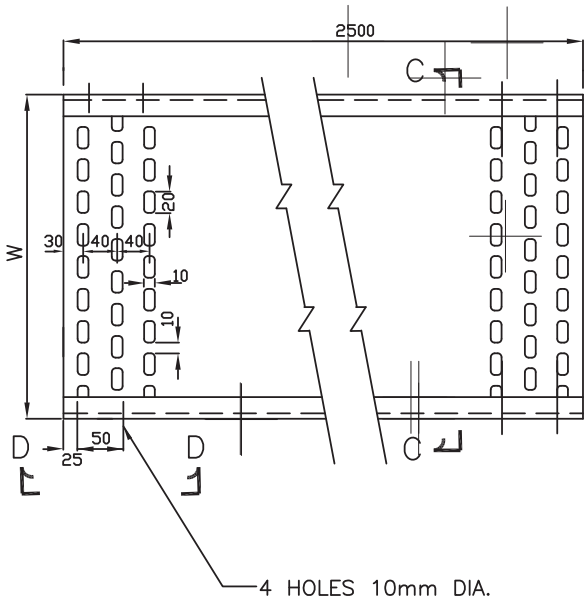

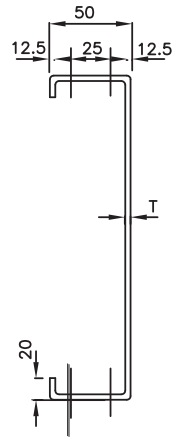

SECTION–CC
(100/50 TRAYS)

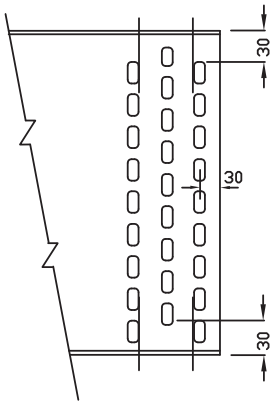

ARRANGEMENT OF PERFORATIONS

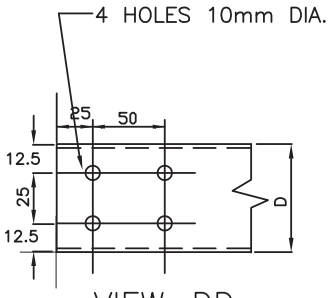

VIEW–DD
(100,50W TRAYS)

TRAY WIDTH W (mm)	100	50
TRAY DEPTH D (mm)	50	50
T (mm)	2	2

PERFORATED TYPE TRAY

TYPICAL DETAILS OF CABLE TRAYS AND ACCESSORIES 286\562	DWG. NO. LDS-(3X200+3X500+1X500) MW KORBA

12319/2020/PS-PEM-MAX

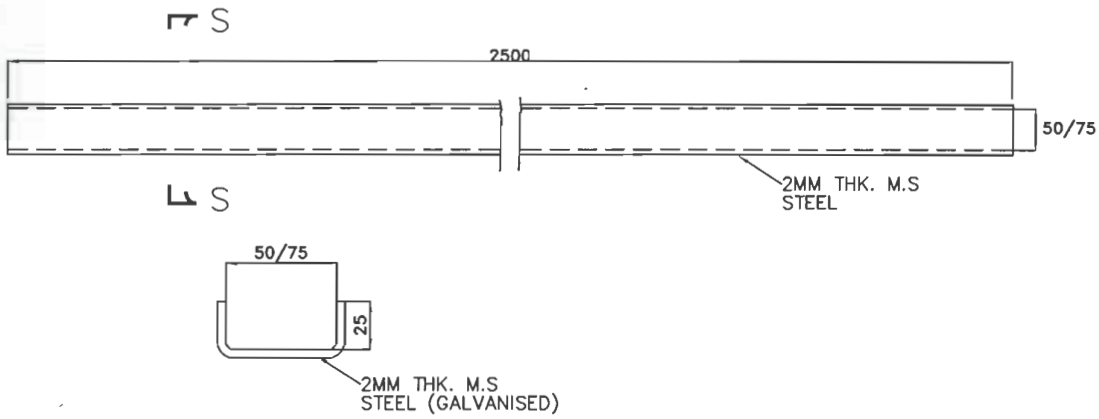

SECTION S–S

CABLE TROUGHS

~~SEE GENERAL NOTES IN SHEET 11.~~

TYPICAL DETAILS OF CABLE TRAY AND ACCESSORIES	BHEL DRAWING NO. ~~PE-DG-427-507-E005~~	
	~~SH 10 OF 11~~	REV 00

SECTION: I

SUB-SECTION: C-4

TECHNICAL SPECIFICATION (C&I PORTION)

CONTROL & INSTRUMENTATION

FOR

LIME DOSING SYSTEM

INDEX

S. No.	DESCRIPTION
1	TITLE SHEET
2	INDEX SHEET
3	C&I SPECIFIC TECHNICAL REQUIREMENT
4	GENERAL TECHNICAL REQUIREMENTS
5	LIST OF DOCUMENTS/DELIVERABLES
6	SPECIFICATION FOR MEASURING INSTRUMENTS (PRIMARY & SECONDARY),ELECTRICAL ACTUATOR AND LCP
7	INSTRUMENTATION CABLE, CABLE INTERCONNECTION AND TERMINATION PHILOSOPHY
8	INSTRUMENT STUB DETAILS
9	INSTRUMENT INSTALLATION DRAWING
10	SIGNAL EXCHANGE BETWEEN DRIVES AND DCS
11	DRIVE AND INSTRUMENT INTERFACE DIAGRAM
12	QUALITY ASSURANCE FOR INSTRUMENTS & STARTER PANEL/LCP AND TYPE TEST REQUIREMENTS
13	MANDATORY SPARES Refer Annexure-II, Sub Section-D, Section-I of Technical Specification for mandatory spares of
14	SUB VENDOR LIST

C&I SPECIFIC TECHNICAL REQUIREMENT
FOR DCS BASED
LIME DOSING SYSTEM

Specific Technical Requirements (C&I):

1. LIME DOSING SYSTEM shall be operated from DCS (BHEL's scope).

2. The Contractor shall provide complete Instrumentation along with necessary fittings, accessories and valve manifold etc for control, monitoring and operation of entire LIME DOSING SYSTEM except marked as BHEL's scope in P&ID attached in specification. All instruments shall be provided with durable epoxy coating for housing and all exposed surfaces of the instruments.

3. All the Electronic Transmitter for Pressure, Temperature and DP based Flow /Level measurements shall be genuine, verifiable PROFIBUS PA protocol compatible instruments. The transmitters shall be connected to DDCMIS through PROFIBUS PA protocol complying to IEC 61158 directly from transmitter. This is subject to customer approval and BHEL decision shall be final.

4. Electrical Actuators (as applicable) shall be Non-Intrusive type electric actuators envisaged with integral starter. The interface of these actuators with DCS shall be of two types viz. with Hardwired interface and with PROFIBUS DP interface. All actuator settings including torque, limit shall be possible without opening the actuator cover and LCD indication shall be available integral to actuator body. Open/Close command termination logic suitably built inside the actuator Details shall be referring in the specification.

5. All ON, OFF, and INCHING Type electric actuators shall be PROFIBUS DP compatible. However, the exact protocol shall be based on finalized protocol of DCS. If PROFIBUS DP protocol is envisaged, then actuator shall have two (redundant) PROFIBUS DP ports for connecting the redundant PROFIBUS DP cables. That is if one PROFIBUS DP cable is cut or not working/not available, then complete actuator functionality shall be available through the second redundant cable without any manual intervention.

6. The PROFIBUS protocol design shall be further validated by BHEL and approved by NTPC during detailed engineering and any variation/ changes required based on DDCMIS system requirements and actual field installation, operational philosophy etc. shall be considered by bidder without any implications.

7. The requirements given are to be read in conjunction with detailed Technical specification enclosed in the specification. Further in case of any discrepancy in the requirement within the same section noted by the bidder in the specification, the same will be brought to the notice of BHEL in the form of pre- bid clarification. In absence of any pre-bid clarification, the more stringent requirement as per interpretation of customer shall prevail without any commercial implication.

8. The make of the items shall be from sub-vendor list. However, the make/model of various instruments/items/systems shall be subject to approval of owner/purchaser during detailed engineering stage. No commercial and delivery implication in this regard shall be acceptable. In case of any conflict or repetition of clauses in the specification, the more stringent requirements among them are to be complied with.

9. All transmitters shall be suitably grouped together and mounted inside (i) Local Instruments Enclosures (LIEs) in case of open areas of the plant and (ii) In Local Instrument Racks (LIRs) in case of covered areas.

10. All instruments (except PROFIBUS PA compatible transmitters) and control elements shall be terminated on JB/LCP in field and JB/LCP are in bidder's scope for bidder's supplied instrument and in BHEL's scope for BHEL's supplied instrument. Number of Junction Boxes shall be sufficient and positioned in the field to minimize local cabling (max 12-15 mtrs) and trunk cable.

11. The contacts of equipment mounted instruments; sensors, switches etc. For external connection including spare contacts shall be wired out to suitably located junction boxes by bidder.

12. For cable scope refer to electrical scope between BHEL and vendor defined in electrical specification.

13. The design, manufacture, inspection, testing, site calibration and installation of all C&I equipment and systems covered under this specification shall conform to the latest editions of applicable codes and standards.

14. Bidder to provide mandatory spares as per mandatory spares list.

15. The specifications for instruments mentioned in the specification are minimum requirements. The detail specifications shall be finalized during detail engineering. The bidders shall specifically mention any deviation they would like to take on the C&I specification. In absence of only deviation, a No deviation certificate is to be furnished.

16. The quantity of instruments for the system shall be as per tender P &ID wherever provided of the respective system as a minimum, for bidding purpose. However, Bidder shall also include in his proposal all the instruments and devices that are needed for the completeness of the plant auxiliary system/ equipment supplied by the bidder, even if the same is not specifically appearing in the P & ID. During detail engineering if any additional instruments are required for safe & reliable operation of plant, bidder shall supply the same without any price implication.

17. Bidder to provide input/output list, drives list, junction box schedule and termination details, recommended control logics / write-up etc. the list of documents to be submitted after award of contract is to be referred by bidder.

18. All the transmitters supplied by Bidder shall be rack mounted. The transmitter racks shall be in Bidder's scope of supply. All transmitters shall be HART compatible.

19. Bidder to perform tests of C&I items/instruments/systems as per Quality plans/type test attached in the specification. However, if any test not specified in the quality plan but specified in specification Tests for I&C equipment included elsewhere in specification will have to perform by Bidder without any cost implication.

20. Instrument installation and accessories required for the same shall be in Bidder's scope and shall be submitted after award of contract. However, any instrument/ analyser installation not covered in the same shall be subject to customer and BHEL approval during detailed engineering. Bidder to provide erection hardware including junction boxes, canopies, structural steel as required.

21. Provision for separate Terminal block/wiring diagram for power and control blocks of control panel to be ensured.

22. Bidder to provide Flow measuring device suitable for the service condition, which shall be decided by BHEL/customer during detail engineering. Bidder to comply the requirement without any commercial implication.

23. Bidder to furnish electrical load/UPS load data during detailed engineering.

24. 415VAC /230 V UPS Power supply shall be provided by BHEL at a single point, further distribution to various instruments/equipment of the system shall be in bidder scope. Bidder to include necessary power distribution board in his scope. Any power supply other than the above, if required by any instrument/equipment has to be derived by the bidder from the above supply & all necessary hardware for the same shall be in bidder scope. Bidder to submit the power requirement along with the bid.

25. Power supply derived for contact interrogation, interposing relay and solenoid shall generally be ungrounded 24 V D.C. only.

26. Interface of MCC, HT SWGR, Solenoid valves, field instruments, Actuators etc. with DDCMIS based control system shall be as per Drive Control Philosophy enclosed in specification.

27. Local control panel , if any required for operation shall be in bidder scope.

28. The solenoid operated valves/Dampers/Gate shall have a limit switch for open/close feedback. Solenoid Valve shall be rated for 24V Dc only.

29. All field instruments enclosure shall be IP65, local panel/cabinet enclosure shall be IP 55, unless otherwise specified.

30. Diaphragm seal shall be provided with Instruments having contact with corrosive media.

31. To ensure availability, adequate redundancy in system design shall be provided at hardware, software and sensor level. For the protection system, independent sensing device shall be provided to ensure adequate safety of plant equipment.

32. Redundancy of sensors shall be provided by bidder

    (i) Triple redundancy for all Analog and binary inputs required for protection of system/drives.
    (ii) For all other control functions dual redundancy of the sensors shall be provided by the bidder.

33. Double root valve shall be provided for all pressure tapings where the pressure exceeds 40kg/cm2.

34. Use of process actuated shall be avoided unless unavoidable.

35. Number of pairs to be selected for Screen /Control cable
    a) F-Type: 2P/4P/8P/12P (Size: 0.5sqmm2)
    b) G-Type: 2P/4P/8P/12P (Size: 0.5sqmm2)
    c) Core Cable: 3CX2.5sqmm2/ 5CX2.5sqmm2/ 12CX1.5sqmm2

36. Instrument installation shall be as per the attached "Standard Hook-up diagram of instrument."

37. In addition to requirements specified here, all C&I systems/ sub-systems/ equipment/ devices shall also meet other requirements stipulated under other Sub-sections/ parts/ sections of specification. In case of any conflict and repetition of clauses in the specification, BHEL discretion will prevail.The requirements given are to be read in conjunction with detailed Technical specification enclosed.

38. All field instruments shall be weatherproof, drip tight, dust tight and splash proof suitable for use under outdoor ambient conditions prevalent in the subject plant. All field-mounted instruments shall be mounted in suitable locations where maximum accessibility for maintenance is achieved. All the field instruments shall also be provided with SS tag nameplate and double compression type Nickel-plated brass cable gland. Gaskets, Fasteners, Counter and mating flange (SS316 material), nuts & bolts etc. shall also be included, wherever required with the field instruments.

39. All the outdoor field instruments such as analysers/transmitters/meters etc. shall be provided with suitable Free standing cabinet(s)/panel/rack/canopy so that the equipments are protected against rain/ sunlight etc.

40. All instruments should be supplied with valid calibration and test certificates provided by OEM.

41. At least 20% spare unused terminals shall be provided everywhere including local junction boxes, instrument racks/enclosures, termination/marshalling cabinets, etc.

42. Drive control philosophy/signal exchange list attached elsewhere in the specification are Tentative. Shall be finalized during detailed engineering.

43. Contractor shall furnish Instrument Schedule, I/O list, Drive list, Cable Schedule, Cable interconnection (DCS end terminal details shall be provided to vendor during detail engineering to incorporate in cable interconnection), JB grouping, Annunciation list, SOE list, List of Instruments/devices for HART in BHEL approved format. Also reusable database format like MS Excel, MS Access etc. of these documents shall also be provided by Contractor in BHEL approved format. Soft copy of the formats shall be provided to the successful bidder.

Note:-

1. All equipment items shall be of latest design with proven on track record.

2. The above given scope is indicative & minimum. Any item/ equipment not indicated above however required for the completeness of the system is to be supplied by bidder without any technical, commercial and delivery implication to BHEL.

3. Documents of C&I System shall be submitted to end user/owner for approval during detail engineering. Changes, if any, shall be accommodated by the bidder without any price/time implication.

GENERAL TECHNICAL REQUIREMENTS
(LIME DOSING SYSTEM)

FORM NO. PEM-6666-0

	SPECIFICATION FOR CONTROL & INSTRUMENTATION FOR AUX PACKAGES	SPECIFICATION NO.:	
		VOLUME	
		SUB SECTION	
		REV. NO.	DATE :
		SHEET	OF

GENERAL REQUIREMENT

1.0 Bidder shall provide complete and independent control & instrumentation system with all accessories, auxiliaries and associated equipments for the safe, efficient and reliable operation of auxiliary systems.

2.0 The quantity of instruments for auxiliary system shall be as per tender P &ID wherever provided of the respective system as a minimum, for bidding purpose. However, Bidder shall also include in his proposal all the instruments and devices that are needed for the completeness of the plant auxiliary system/ equipment supplied by the bidder, even if the same is not specifically appearing in the P & ID. During detail engineering if any additional instruments are required for safe & reliable operation of plant, bidder shall supply the same without any price implication.

3.0 Measuring instruments/equipment and subsystems offered by the bidder shall be from reputed experienced manufacturers of specified type and range of equipment, whose guaranteed and trouble free operation has been proven. Further all the instruments shall be of proven reliability, accuracy, and acceptable international standards and shall be subject to employer's approval. All instrumentation equipment and accessories under this specification shall be furnished as per technical specification, ranges, makes/ numbers as approved by the employer' during detail engineering.

4.0 The necessary root valves, impulse piping, drain cocks, gauge-zeroing cocks, valve manifold and all the other accessories required for mounting/ erection of these local instruments shall be furnished, even if not specifically asked for, on as required basis. The contacts of equipment mounted instruments; sensors, switches etc for external connection including spare contacts shall be wired out to suitably located junction boxes.

5.0 The customer specification attached as Specific Technical Requirement will supercede the Data sheets, if there is any mismatch.

LIST OF DOCUMENTS/DELIVERABLES

	C&I SPECIFICATION FOR LIME DOSING SYSTEM	SECTION: C SUB SECTION: C&I

LIST OF DELIVERABLES OF PEM - C&I DEPARTMENT			
Sl. No.	**DRAWING NO.**	**DRAWING/DOCUMENT TITLE**	**CATEGORY**
1	PE-V4-467-145-I901	CONTROL & OPERATIONAL WRITE-UP FOR THE SYSTEM WITH SET POINTS	A
2	PE-V4-467-145-I902	CONTROL SCHEME/LOGIC DIAGRAM (TO BE IMPLEMENTED IN DDCMIS)	A
3	PE-V4-467-145-I903	HMI PICTURES/PLANT SCHEMATICS	A
4	PE-V4-467-145-I904	INSTRUMENT SCHEDULE WITH SET POINTS	A
5	PE-V4-467-145-I905	I/O LIST (ANALOG & BINARY)	A
6	PE-V4-467-145-I906	DRIVE LIST/SOLENOID/ACTUATOR VALVE LIST WITH LOCATION DATA	A
7	PE-V4-467-145-I907	FIELD JB/LIE/LIR,DRIVES TERMINATIONS	A
8	PE-V4-467-145-I908	DATASHEETS FOR INSTRUMENTS, JBs, etc.	A
9	PE-V4-467-145-I909	QUALITY PLANS (INSTRUMENTS, VMS, etc.)	A
10	PE-V4-467-145-I910	INSTRUMENT HOOK-UP DRAWING	A
11	PE-V4-467-145-I911	THERMOWELL SIZING CALCULATION	A
12	PE-V4-467-145-I913	CABLE SCHEDULE & INTERCONNECTION	A
13	PE-V4-467-145-I914	ANNUNCIATION & SOE LIST	A

NOTES:
ANY OTHER DOCUMENT DECIDED DURING DETAILED ENGINEERING SHALL BE PROVIDED BY BIDDER WITHOUT ANY COMMERCIAL/TECHNICAL IMPLICATION.

CONTRACTOR TO SUBMIT REUSABLE DATABASE FORMATS IN BHEL/CUSTOMER APPROVED FORMATS LIKE MS EXCEL, MS ACCESS OF DOCUMENTS LIKE INSTRUMENT SCHEDULE, I/O LIST, DRIVE LIST, FIELD JB TERMINATIONS, CABLE SCHEDULE & INTERCONNECTION, etc.
SOFT COPY OF FORMATS SHALL BE PROVIDED TO SUCCESSFUL BIDDERS.

SPECIFICATION FOR MEASURING INSTRUMENTS (PRIMARY & SECONDARY), ELECTRICAL ACTUATOR AND LCP.

CLAUSE NO.	TECHNICAL REQUIREMENTS
1.00.00	**MEASURING INSTRUMENTS (PRIMARY AND SECONDARY)**
1.01.00	Measuring instruments/equipment and subsystems offered by the Bidder shall be from reputed experienced manufacturers of specified type and range of equipment, whose guaranteed and trouble free operation has been proven. Refer Sub-section Basic Design Criteria. Further, all instruments shall be of proven reliability, accuracy, and repeatability requiring a minimum of maintenance and shall comply with the acceptable international standards and shall be subject to Employer's approval.
1.02.00	Every panel-mounted instrument requiring power supply shall be provided with easily replaceable glass cartridge fuses of suitable rating. Every instrument shall be provided with a grounding terminal and shall be suitably connected to the panel grounding bus.
1.03.00	All transmitters, sensors, switches and gauges for parameters like pressure, temperature, level, flow etc. as required for the safe and efficient operation and maintenance as well as for operator and management information (including all computation) of equipment in the system under the scope of specification shall be provided on as required basis with in quoted lump sum price. The Contractor shall furnish all Instrumentation / Control equipment & accessories under this specification as per technical specification, ranges, makes & model as approved by the Employer during detailed engineering.
1.04.00	The necessary root valves, impulse piping, drain cocks, gauge-zeroing cocks, valve manifolds and all the other accessories required for mounting/erection of these local instruments shall be furnished, even if not specifically asked for, on as required basis. The contacts of equipment mounted instruments, sensors, switches etc. for external connection including spare contacts shall be wired out in flexible/rigid conduits, independently to suitably located common junction boxes. The proposal shall include the necessary cables, flexible conduits, junction boxes and accessories for the above purpose. Double root valves shall be provided for all pressure tapping where the pressure exceeds 40 Kg./sq.cm.
1.05.00	All instruments envisaged for sea water applications, shall be provided with wetted parts made of Monel/ Hastelloy C or any other material (if provenness experience of the proposed material for such applications is established by contractor). For Chlorine application: Instruments shall be provided with wetted parts (e.g. diaphragm seal, etc.) made of Hastelloy C. Also, filled liquid shall be Fluorolube oil/ Inert Hydrocarbon / CTFE etc., for these applications. For applications of FECL3 solution: Instruments shall be provided with wetted parts (e.g. diaphragm seal, etc.) made of Tantalum.
1.06.00	For coastal areas, all instruments shall be provided with durable epoxy coating for housings and all exposed surfaces of the instruments.
1.07.00	The instruments, for which technical specification is not attached, shall be supplied as per the standard and proven practice of the contractor. The same shall be established by the contractor during detailed engineering by providing detailed explanation/concepts, if required by the employer, of such implementation along with standard documentation.

16.00.00 **FIELD INSTRUMENTS BASED ON FIELDBUS**

The following instruments shall be connected to DDCMIS through fieldbus i.e. FOUNDATION Fieldbus/PROFIBUS PA protocol complying to IEC 61158 directly from transmitter.

16.01.00 **Electronic Transmitter for Pressure, Differential Pressure and DP based Flow / Level measurements.**

S No.	Features	Essential/Minimum Requirements
1.	Type of Transmitter	FOUNDATION Fieldbus/PROFIBUS PA based output

CLAUSE NO.	TECHNICAL REQUIREMENTS		
	2	Accuracy	± 0.060 % of calibrated range (minimum) for calibrated range greater than 400 mmwc. +0.065% of calibrated range (minimum) for calibrated range greater than 250 kg/cm2. ± 0.10 % of calibrated range (minimum) for calibrated range less than 400 mmwc.
	3.	Stability	0.25 % of calibrated range for 10 years for calibrated range greater than equal to 400 mmwc on standard conditions of manufacturer. 0.2 % of calibrated range for 1 years for calibrated range less than 400 mmwc on standard conditions of manufacturer. 0.15% of calibrated range for 5 years for DPT with static pressure greater than 250 kg/cm2.
	4	Turn down	50:1 for greater than or equal to span of 400mmwcl. 20:1 for span below 400mmwcl. 10:1 for span greater than 250 kg/cm2
	(Above mentioned (2,3,4) parameters/features of offered models shall be strictly as defined in standard published catalogue of the manufacturer only).		
	5	Housing	Weather proof as per IP-67, metallic housing with durable corrosion resistant coating
	6.	Electrical connection	½" NPT(F) FOUNDATION Fieldbus/PROFIBUS PA compatible
	7.	Process connection	½" NPT (F)
	8.	Operating Ambient temperature	85 deg C without display. 70 deg C with display.
		Overpressure	150% of max operating pressure
	9	Accessories	-Diaphragm seal, pulsation dampeners, syphon etc. as required by service and operating condition. -2 valve manifold for absolute & gauge pressure transmitters, -3-valve for DP and 5 valve manifold for level/flow applications. -The valve manifold shall be non-integral type. -For hazardous area, enclosure as described in NEC article 5.

10.	Mounting	2 inch pipe mounting with Enclosure/Rack/Canopy.
11.	Diagnostics & display	Self-Indicating feature and digital display on transmitter

Notes

- For primary air/ secondary air/flue gas/ furnace pressure applications, DP type transmitters shall be provided for pressure measurement below 2000 mmwc.
- LVDT type is not acceptable.
- Where the process fluids are corrosive, viscous, solid bearing or slurry type, diaphragm seals shall be provided. Parts below the diaphragm shall be removable for cleaning. The entire volume above the diaphragm shall be completely filled with an inert liquid suitable for the application.

2.02.00 **GUIDED WAVE RADAR TYPE LEVEL TRANSMITTER**

Type	Microprocessor based 2 wire type (loop powered), HART protocol compatible Guided wave radar transmitter.
Principle	TDR (Time domain reflectometry)
Probe Type & Material	(i) Coaxial probe of SS316/316L. If required, probe shall be suitable for overfill prevention. (ii) Rod probe, cable probe of SS316/SS316L can be used for applications wherever coaxial probe is not suitable.
Output signal	4-20 mA DC along with superimposed digital signal (based on HART protocol), suitable for over fill prevention.
Accuracy	+/- 0.5% of calibrated span or minimum 5mm.
Power supply	24 VDC +/- 10%.
Housing	Weather proof as per IP-65, metallic housing with durable corrosion resistance coating.

Adjustment/ calibration	Using hand held HART calibrator/ centralized PC based system (as applicable).
Zero & span adjustment	Continuous, temper proof, remote as well as manual adjustability from instrument. It should be possible to calibrate the instrument without any level in the tank/sump etc.
Display	Integral digital display.
Load Impedance	500 ohms (minimum).
Electromagnetic compatibility	Shall meet EN 61326-1 (1997) and AmdtA1, class A equipment/EN 50081-2 & EN 5008 1-2 & EN 50082-2
Mounting	(i) External cage shall be provided where ever side mounting is required. External cage and other mounting accessories to be provided by the contractor. (ii) Where ever top mounting is required, all mounting accessories, stilling well (as required) etc., shall be provided by the contractor. (iii) All weather canopy shall be provided for protection from direct sunlight and direct rain for open locations.

Note: Four wire type transmitters can also be provided for applications where 2- wire transmitter has some technical limitations, subject to employer's approval during detailed engineering stage. However, in such cases isolated 4-20 mA DC (analog) output shall be provided. Power supply required for such transmitters shall be 240V AC / 24V DC.

2.03.00 **Ultrasonic Type level Transmitter**

S.No.	Features	Essential/Minimum requirement
1.	Type of Transmitter	Non-contact Microprocessor based 2 wire type (loop powered), HART protocol compatible Ultrasonic transmitter.
2.	Output signal	4-20 mA DC (Analog) along with superimposed digital signal (based on HART protocol).

3.	Accuracy	+/- 0.5% of calibrated span or minimum 5mm.
4.	Power supply	24 V DC +/- 10%.
5.	Temperature compensation	To be provided within transducer.
6.	Housing	Weather proof as per IP-65, metallic housing with durable corrosion resistance coating.
7.	Adjustment/calibration/ maintenance	Using hand held HART calibrator/ centralized PC based system (as applicable).
8.	Zero and Span adjustment	Continuous, tamper proof, remote as well as manual adjustability from instrument. It should be possible to calibrate the instrument without any level in the tank/sump etc.
9.	Sensor Material	Corrosion resistant material to suit individual application requirement.
10.	False signal tolerance	Transmitter shall be capable of ignoring false echoes from internal tank/sumps obstructions such as pipes, heating coils or agitator blades. Also transmitter shall have adjustable damping circuitry.
11.	Range	Range of transmitter shall be capable of covering the complete level span of tank taking care of blocking distance, frequency attenuation due to surface, obstructions, vapors etc.
12.	Display	Integral digital display
13.	Diagnostics	Loss of echo alarm etc.
14.	Load Impedance	500 ohms (minimum).
15.	Electrical Connection	Plug and socket

16.	Accessories	• All weather canopy shall be provided for protection from direct sunlight and direct rain for open locations. • All mounting accessories required for erection and commissioning shall be provided. • For hazardous area, explosion proof enclosure as described in NEC article 500

Note:

1) Contractor can also provide Radar type transmitter as per above specification in place of ultrasonic transmitter subject to approval by Employer during detailed Engineering. Sonic frequency based transmitters can also be provided under "ultrasonic transmitters" category for fly ash silo level.

2) Four wire type transmitters can also be provided for applications where 2- wire transmitter has some technical limitations, subject to employer's approval during detailed engineering stage. However, in such cases isolated 4-20 mA DC (analog) output shall be provided. Power supply required for such transmitters shall be 240V AC / 24V DC.

3) For applications where transmitter location is not accessible, the transmitter shall have separate sensor unit and electronic unit for such applications. It shall be possible to mount the electronic unit at accessible location.

4.00.00 **SPECIFICATIONS FOR PR. GAUGE, D.P. GAUGE, TEMP. GAUGE AND LEVEL GAUGE.**

Sl. No	FEATURES	ESSENTIAL/MINIMUM REQUIREMENTS		
		Pr. Gauge/ DP Gauge/ Draught gauges	Temperature Gauge	Level Gauge
1	Sensing Element	Bourdon for high pressure, Diaphragm/ Bellow for low pr.	Inert gas actuated/ Liquid filled other than mercury	Tempered * toughened Borosilicate gauge glass steel armoured reflex or transparent type.
2	Material of sensing element	SS 316	SS 316	
3	Material of movement	SS 304	SS 304	
4	Body material	Die-cast aluminium	Die-cast aluminium	Forged carbon steel/304 SS
5	Dial size	150mm	150 mm	Tubular covering entire range
6	End connection	1/2 inch NPT (M)	1/2 inch or 3/4 inch NPT (M).	Process connection as per ASME PTC and drain/vent 15 NB

7	Accuracy	±1% of span	± 1% of span	± 2%
8	Scale	Linear, 270° arc graduated in metric units	Linear, 270° arc graduated in °C	Linear vertical
9	Range selection	Shall cover 125% of max. operating press	Shall cover 125% of max. operating temp	Shall cover max. Operating level.
10	Over range	125% of FSD	125% of FSD	-
11	Housing	Weather and dust proof as per IP-55	Weather and dust proof as per IP-55	CS/304 SS leak proof
12	Zero/span adjustment	Provided	Provided	--
13	Identification	Engraved with service legend or laminated phenolic name plate		
14	Accessories	Blow out disc, siphon, snubber, pulsation dampener, chemical seal (if required by process) gauge isolation valve	SS Thermowell	Gasket for all KEL-F shield for transparent type vent and drain valves of Steel/SS as per CS/Alloy process Requirement.
Notes:-				

*Bicolour type level gauges will be provided for applications involving steam and water except for condensate and feed water services.

Length of gauge glass shall not be more than 1400 mm. If the vessel is higher, multiple gauge glasses with 50 mm overlapping shall be provided.

Where the process fluids are corrosive, viscous, solid bearing or slurry type, diaphragm seals shall be provided. Parts below the diaphragm shall be removable for cleaning. The entire volume above the diaphragm shall be completely filled with an inert liquid suitable for the application.

5.00.00 **PROCESS ACTUATED SWITCHES**

FEATURES	ESSENTIAL / MINIMUM REQUIREMENTS		
	Pressure/ Draft Switches/ DP Switches	Temperature switches	Level switches
Sensing Element	Piston actuated for high pressure and diaphragm or bellows for low pr./ vacuum	Vapor pressure sensing, liquid filled bellow type with SS bulb and capillary (5 m minimum, to suit application)	Capacitance types, float type, conductivity type, RF type, Ultrasonic type as per suitability to the application.
Material	316 SS	Bulb 316 SS/ capillary 304 SS	316 SS
End connection	½ inch NPT (F)	½ inch NPT (F)	Manufacturer standard
Over range/ proof pressure	150% of maximum operating pr.	-	150% of maximum operating pr.
Repeatability	+/- 0.5% of full range		
No. of contacts	2 No.+2NC, SPDT snap action dry contact		
Rating of contacts	60 V DC, 6 VA (or more if required by DDCMIS)		
Elect. Connection	Plug in socket.		
Set point adjustment	Provided over full range.		
Dead band adjustment	Adjustable/ fixed as per requirement of application.		
Enclosure	Weather and dust proof as per IP-55, metallic housing.		
Accessories	Siphon, snubber, chemical seal, pulsation dampeners as required by process	Thermo well of 316 SS and packing glands	All mounting accessories
Mounting	Suitable for enclosure/ rack mounting or direct mounting	Suitable for rack mounting or direct mounting	-

Power Supply (wherever required)	As per Contractor's Standard practice.

Notes :-

1) Where the process fluids are corrosive, viscous, solid bearing or slurry type, diaphragm seals shall be provided. Parts below the diaphragm shall be removable for cleaning. The entire volume above the diaphragm shall be completely filled with an inert liquid suitable for the application.

2) Pressure/ Diff pressure switches for very low press/ DP measurements can have sensor material other than SS316 in case of any technical limitation and the offered product is standard product of the manufacture for very low pressure applications.

3) Repeatability can be upto +/-1% of full range in case of switches with diaphragm seals or very low pressure/DP range.

4) The specifications of switches for air conditioning & ventilation system / process can be as per system manufacturer's standards. The manufacturer shall submit the adequate supporting documents for establishing their standard practice.

6.00.00 **SOLENOID VALVES**

Solenoid valves shall fulfill the following requirements: -

a) Type 2/3/4 way SS 316/ forged brass (depending on the application subject to Employer's approval during detailed engg.)

b) Power supply 24V DC.

c) Plug in connector connection.

d) Insulation : Class "H"

7.00.00 **Limit switches**

e) Limit switches shall be silver plated with high conductivity and non-corrosive type. Contact rating shall be sufficient to meet the requirement of Fire alarm Control System subject to a minimum of 60V, 6VA rating. Protection class shall be IP-55.

10.04.00 **pH Analyser**

a)	**Type**	: Cell - flow through
b)	**Accuracy**	: < ± 1% of reading
c)	**Range**	: 0 - 14 pH freely programmable (For others)
d)	**No. of steams**	: Single
e)	**Temp. compensation**	: Automatic

CLAUSE NO.	TECHNICAL REQUIREMENTS
1.00.00	**GENERAL:**
1.01.00	Actuators shall be designed for valve operation to ensure proper function in accordance with specifications given below and complying to EN15714-2 or equivalent. All standards, specifications and codes of practice referred to herein shall be the latest editions including all applicable official amendments and revisions.
1.02.00	This sub-section of specification is applicable for following types of electric actuators:
1.02.01	**Modulating duty electric actuators:** These shall be provided as per standard practice of OEM of equipment, meeting other requirements of specifications. For specifications of Blade pitch actuators, refer clause no. 5.00.00 of this chapter.
1.02.02	**Electric actuators for valves/ dampers/ gates (other than covered in 1.02.01):** These actuators shall be Non-Intrusive type electric actuators. The interface of these actuators with DDCMIS shall be of two types viz. with Hardwired interface and with Fieldbus interface. The common requirements of both these type of actuators are specified at clause 2.00.00, specific requirements of Non-Intrusive hardwired actuators are specified at clause 3.00.00 and specific requirements of Non-Intrusive fieldbus actuators are specified at clause 4.00.00. The applications where these two types of actuators are to be provided is specified in Part-A of Technical Specifications.
2.00.00	**COMMON REQUIREMENTS FOR NON INTRUSIVE ELECTRIC ACTUATORS**
2.01.00	**TYPE:**
2.01.01	The actuators shall have integral starters with built in SPP (Single Phasing Preventer). 415 V, 3 phase 3 wire power supply shall be given to the actuator from switch board as applicable through a switch fuse unit. Control voltage of the motor starter shall be 110 V AC / 24 V DC, derived suitably from 415V power supply.
2.01.02	The actuators shall be Non- Intrusive electric actuator. All actuator settings including torque, limit shall be possible without opening the actuator cover and LCD indication shall be available integral to actuator body.
2.02.00	**RATING:** (a) Supply Voltage & frequency: 415V +/- 10%, 3 Phase, 3 Wire & 50HZ +/-5%. (b) Sizing: Open/Close at rated speed against designed differential pressure at 90% of rated voltage. For ON/OFF type: Three successive open-close operations or 15 minutes, whichever is higher. For inching type: 150 starts per hour or required cycles, whichever is higher.
2.03.00	**CONSTRUCTION:** (a) Enclosure: Totally enclosed weatherproof, minimum IP-68 degree of protection. (b) Manual Wheel: Shall disengage automatically during motor operation.

CLAUSE NO.	TECHNICAL REQUIREMENTS
2.04.00	**MOTOR:** (a) Type : Squirrel cage induction motor suitable for Direct On Line (DOL)starting. (b) Enclosure: Totally enclosed, self-ventilated. (c) Insulation Class F. Temperature rise 70 Deg C. over 50 Deg C ambient. (d) Bearings: Double shielded, grease lubricated antifriction. (e) Earth Terminals: Two (f) Protection: Single Phasing Protection, Over heating protection through Thermostat (as applicable) and wrong phase sequence protection shall be provided over and above other protection features standard to bidder's design. Suitable means shall be provided to diagnose the type of fault locally.
2.05.00	**POSITION/TORQUE TRANSMITTER:** The Position/ Limit measurement shall be done using absolute encoders which will give information of position/ limit in both the directions. Electronic measurement of torque shall be provided.
2.06.00	**LOCAL OPERATION:** It shall be possible to operate the actuator locally also. Lockable local/remote selection shall be provided on the actuator.
2.07.00	**LCD DISPLAY:** A local LCD display shall be provided to give information regarding actuator alarms, status and valve position indications as a minimum in local.
2.08.00	**WIRING:** Suitable voltage grade copper wire.
2.09.00	**TERMINAL BLOCK:** For power cables, the grade of TBs shall be minimum 650V.
2.10.00	**ACCESSORIES:** All required accessories (if applicable) for calibration / settings/ configuration of various parameters of actuator shall be provided. For quantities, please refer Part A of technical specifications.

2.11.00 **SIL CERTIFICATION:**

All actuators shall be certified for SIL 2 or better.

3.00.00 **SPECIFIC REQUREMENTS FOR NON INTRUSIVE HARDWIRED ACTUATORS**

3.01.00 **INTERFACES:**

For ON-OFF and INCHING type actuators interface with the control system shall be through hardwired signal only.

(a) Open/Close command, open/ close status and disturbance monitoring signal (common contact for Overload, Thermostat, control supply failure, L/R selector switch at local & other protections operated) shall be provided hardwired.

(b) The actuator shall be able to accept open/close command at 24V DC with max. 2.5VA load from control system. Accordingly suitable isolated interface in the actuator shall be provided.

(c) Open/close command termination logic shall be suitably built inside actuator.

(d) For typical wiring diagram Refer Tender Drawing No. 0000-999-POI-A-063 (Except plug & socket connector, if not applicable)

3.02.00 **TERMINAL BOX:**

Suitable terminals/ connectors, integral to actuator, for terminating instrumentation & power cables shall be provided. Necessary glands for power cables and instrumentation cables shall be provided.

4.00.00 **SPECIFIC REQUIREMENTS FOR NON INTRUSIVE FIELDBUS ACTUATORS**

4.01.00 **INTERFACES:**

For ON-OFF and INCHING type actuators interface with the control system shall be through fieldbus network.

(a) Open/ close commands, open/ close feedback status, disturbance signal etc. shall be available to the Control System through the fieldbus network along with diagnostics. The detailed diagnostics including the actuator operating data shall be available to the DDCMIS through the fieldbus network.

(b) All actuators shall be Foundation Fieldbus/ Profibus compatible. However the exact protocol shall be based on finalized protocol of DDCMIS. If Profibus DP protocol is envisaged then actuator shall have two (redundant) Profibus DP ports for connecting the redundant Profibus DP cables. That is if one profibus cable is cut or not working/ not available, then complete actuator functionality shall be available through the second redundant cable without any manual intervention.

(c) Open/close command termination logic shall be suitably built inside actuator.

CLAUSE NO.	TECHNICAL REQUIREMENTS

4.02.00 **TERMINAL BOX:**

Suitable terminals/ connectors, integral to actuator, for terminating fieldbus cables and power cables shall be provided. Necessary glands for power cables and armored fieldbus cables shall be provided.

CONTROL VALVES, ACTUATORS & ACCESSORIES

1.00.00 CONTROL VALVES & ACCESSORIES

1.01.00 General Requirements

1.01.01 The control valves and accessories equipment furnished by the Bidder shall be designed, constructed and tested in accordance with the latest applicable requirements of code for pressure piping ANSI B 31.1, the ASME Boiler & pressure vessel code, Indian Boiler Regulation (IBR), ISA, and other standards specified elsewhere as well as in accordance with all applicable requirements of the "Federal Occupational Safety and Health Standards, USA" or acceptable equal standards. All the Control Valves, their actuators and accessories to be furnished under this Sub-section will be fully suitable and compatible with the modulating loops covered under the Specification.

1.01.02 All the control valves and accessories offered by the Bidder, shall be from reputed, experienced manufacturers of specified type and range of valves.

1.02.00 CONTROL VALVE SIZING & CONSTRUCTION

1.02.01 The design of all valve bodies shall meet the specification requirements and shall conform to the requirements of ANSI (USA) for dimensions, material thickness and material specification for their respective pressure classes.

1.02.02 The valve sizing shall be suitable for obtaining maximum flow conditions with valve opening at approximately 80% of total valve stem travel and minimum flow conditions with valve stem travel not less than 10% of total valve stem travel. All the valves shall be capable of handling at least 120% of the required maximum flow. Further, the valve stem travel range from minimum flow condition to maximum flow condition shall not be less than 50% of the total valve stem travel. The sizing shall be in accordance with the latest edition of ISA handbook on control valves. While deciding the size of valves, Bidder shall ensure that valves trim exit outlet velocity as defined in ISA handbook does not exceed 8 m/sec for liquid services, 150 m/sec. for steam services and 50% of sonic velocity for flashing services. Bidder shall furnish the sizing calculations clearly indicating the outlet velocity achieved with the valve size selected by him as well as noise calculations, which will be subject to Employer's approval during detailed engineering.

1.02.03 Control valves for steam and water applications shall be designed to prevent cavitation, wire drawing, flashing on the downstream side of valve and down stream piping. Thus for cavitation/flashing service, only valve with anti cavitation trim shall be provided. Detailed calculations to establish whether cavitation will occur or not for any given application shall be furnished.

1.02.04 Control valves shall have leakage rate as per leakage Class-IV.

CLAUSE NO.	TECHNICAL REQUIREMENTS
1.02.05	The control valve induced noise shall be limited to 85 dBA at 1 meter from the valve surface under actual operating conditions. The noise abatement shall be achieved by valve body and trim design and not by use of silencers.
2.00.00	**VALVE CONSTRUCTION**
2.01.00	All valves shall be of globe /Butterfly body design & straightaway pattern with single or double port, unless other wise specified or recommended by the manufacturer to be of angle body type. Rotary valve may alternatively be offered when pressure and pressure drops permit.
2.02.00	Valves with high lift cage guided plugs & quick-change trims shall be supplied.
2.03.00	Cast Iron valves are not acceptable.
2.04.00	Bonnet joints for all control valves shall be of the flanged and bolted type or other construction acceptable to the Employer. Bonnet joints of the internal threaded or union type will not be acceptable.
2.05.00	Plug shall be of one-piece construction cast, forged or machined from solid bar stock. Plug shall be screwed and pinned to valve stems or shall be integral with the valve stems.
2.06.00	All valves connected to vacuum on down stream side shall be provided with packing suitable for vacuum applications (e.g. double vee type chevron packing)
2.07.00	Valve characteristic shall match with the process characteristics.
2.08.00	Extension bonnets shall be provided when the maximum temperature of flowing fluid is greater than 280 deg. C.
2.09.00	Flanged valves shall be rated at no less then ANSI press class of 300 lbs.
3.00.00	**VALVE MATERIALS**
	Refer mechanical sections for body and trim materials. The exact body and trim materials shall be finalised during detailed engineering depending on the service applications.
	However, Bidder may offer valves with body and trim materials better than specified materials and in such cases Bidder shall furnish the comparison of properties including cavitation resistance, hardness, tensile strength, strain energy, corrosion resistance and erosion resistance etc. of the offered material vis-a-vis the specified material for Employer's consideration and approval.

4.00.00 END PREPARATION

Valve body ends shall be either butt welded/socket welded, flanged (Rubber lined for condensate service) or screwed as finalised during detailed engineering and as per Employer's approval. The welded ends wherever required shall be butt welded type as per ANSI B 16.25 for control valves of sizes 65 mm and above. For valves size 50 mm and below welded ends shall be socket welded as per ANSI B 16.11. Flanged ends wherever required shall be of ANSI pressure-temperature class equal to or greater than that of the control valve body.

5.00.00 VALVE ACTUATORS

All Control Valves shall be furnished with Pneumatic Actuators. The Bidder shall be responsible for proper selection and sizing of valve actuators in accordance with the pressure drop and maximum shut off pressure and leakage class requirements. The valve actuators shall be capable of operating at 60 deg.C continuously.

Valve actuators and stems shall be adequate to handle the unbalanced forces occurring under the specified flow conditions or the maximum differential pressure specified. An adequate allowance for stem force, at least 0.15 Kg/sq.cm. per linear millimeter of seating surface, shall be provided in the selection of the actuator to ensure tight seating unless otherwise specified.

The travel time of the pneumatic actuators shall not exceed 10 seconds.

6.00.00 CONTROL VALVE ACCESSORY DEVICES

6.01.00 All pneumatic**ally** actuated control valve accessories such as air locks, hand wheels/hand-jacks, limit switches, Microprocessor based Positioner, diffusers, external volume chambers, position transmitters (capacitance or resistance type only), reversible pilot for Positioner, tubing and air sets, solenoid valves and junction boxes etc. shall be provided as per the requirements.

7.00.00 SPECIFICATIONS FOR MICROPROCESSOR BASED POSITIONERS

1	Electrical	a) Input signal	4-20 mA
		b) Power Supply	Loop powered from the output card of control system.
		c) Hart Protocol	Compatibility for remote calibration & diagnostics (Super-imposed Hart signal on input signal (4-20 mA)
		d) Valve position sensing	Non contact type position sensing **with** 4-20 mA output signal

2	Environment	a) Operating Temp	(-)30 To 80 Deg. C
		b) Humidity	0-95 %
		c) Protection Class	IP-65 Minimum
4	Test reports/ certificates	Factory Valve Signature Tests reports (Pr vs Valve travel and Travel vs I/P signal) are to be provided.	
		Test certificates as per Manufacture Standard/Relevant Standard are To Be Submitted	
5	Configuration/ calibration	Remote calibration, Auto & Manual calibration shall be possible. Universal HART Calibrator to be provided.	
6	Operating	Operating Range	Full range & split range signal.
7	Modes	Valve Action	Direct & Reverse valve action(selectable)
		Flow Characterization	Possible to fit valve characteristic curve - Linear & Equal Percentage.
8	Fail Safe/Fail Freeze	Fail safe/Fail freeze feature is to be provided. (In case, the fail freeze feature is not intrinsic to the positioner, Bidder shall achieve the same externally through solenoid valve connected in the pneumatic circuit).	
9	Pneumatic	Air capacity	Sufficient to handle the valves selected/ boosters to be supplied if required.
		Air supply pressure	To suit air supply pressure/quality available.
		Process connection	1/4 inch NPT
10	Electrical Cable Entry	1/2-NPT, side or bottom entry to avoid water ingress.	
11	Performance	Characteristic Deviation	<=0.5 % Of Span

		Ambient Temp Effect	<=0.01 %/Deg C Or Better
12	EMC & CE Compliance	Required To International Standard Like EN/IEC.	En50081-2& En50082 Or Equivalent
13	Accessories	In-built operator panel	Display with push buttons for configuration and display on the Positioner itself (password protected/hardware lock).
		Press gauge block	For supply & output pressure.
		Mounting assembly	On as required basis.

8.00.00 TEST AND EXAMINATION

All valves shall be tested in accordance with the quality assurance programme agreed between the Employer and Contractor, which shall meet the requirements of IBR and other applicable codes mentioned elsewhere in the specifications. The tests shall include but not be limited to the following:

8.01.00 Non Destructive Test as per ANSI B-16.34.

8.02.00 Hydrostatic shell test in accordance with ANSI B 16.34 prior to seat leakage test.

8.03.00 Valve closure test and seat leakage test in accordance with ANSI-B 16.34 and as per the leakage class indicated above.

8.04.00 Functional Test: The fully assembled valves including actuators control devices and accessories shall be functionally tested to demonstrate times from open to close position.

8.05.00 **CV Test**: Refer **Cl.no 3.00.00 (8) Subsection IIIC-06 (Type test requirements)**

9.00.00 CONTROL VALVE QUANTITIES

Bidder shall furnish all the control valves under this package as finalised during detailed engineering stage without any price repercussions whatsoever depending on the process requirements. All the control valves provided by the Bidder for this project shall meet the specifications requirements specified herein. Specification for control valves in this Sub-section has to be read in conjunction with other relevant Sub-sections of this specification.

CLAUSE NO.	TECHNICAL REQUIREMENTS
1.00.00	**CONTROL DESK & PANELS**
1.01.00	**GENERAL**
1.01.01	All control desk, panels, LVS panel etc. shall be furnished fully wired with necessary provision for convenience outlets, internal lighting, grounding, ventilation, space heating, anti-vibration pads, internal piping & accessories as required for completeness of the system.
1.01.02	All panels, desks, cabinets shall be free standing type & have bottom / top entry for cables to be finalised application wise during detailed engineering stage. The bottom of desk & cabinets shall be sealed with bottom plate, compression cable glands (double for field and single for inside rooms) and fire proof sealing material to prevent ingress of dust and propagation of fire. Sufficient number of power receptacles with disconnect switches shall be installed within all panels/desk.
1.01.03	Exterior steel surface shall be sand blasted, ground smooth, filled, primed, sanded and smooth enamel painted to give a good finish subject to minimum paint thickness of 65-75 microns for sheet thickness of 3 mm and 50 microns for sheet thickness of 2mm. The exact color shall be finalised during detailed engineering.
1.01.04	The design shall conform to the EN ISO 11064 (Ergonomical design of control room), Part-1,2 and 3.
2.00.00	**CONTROL DESK & PANEL**
2.01.00	**GENERAL**
2.01.01	The exact dimensions, material, construction details, grounding, general arrangement etc. of Control Desk etc. shall be as per the actual requirement and shall be finalised during detailed engineering and subjected to Employer's Approval.
2.01.02	For control desk mounted instruments/ devices etc., which are to be powered from UPS, all required conversion of interface equipments / accessories to make such devices compatible with UPS supply shall be provided. All necessary hardware like Input switches/ fuse unit for each feeder as well as switch fuse unit for each instrument/ device on the power supply line shall be provided. From UPS, redundant feeders shall be provided with suitably rated MCB and provision of fast auto changeover of UPS feeders.
2.02.00	**Control Desk (CD)**
2.02.01	Control desk shall be Modular, non-welded construction free standing table top type with front & back cover constructed of 1.6 mm thick CRCA steel plates. The tabletop of the control desk shall be arc-shaped for mounting TFT monitors & mice. The work surface of control desk shall be 30mm thick with the top 12mm of Acrylic Solid Surface (ASS) and the remaining 18mm of laminated medium density fiber board. Work surface shall be made of two different colors at same level and seamlessly joined in each section. The structure frame shall consist of extruded aluminum top and bottom horizontal beams and vertical support tensioned together to form an integrated, finished curvilinear shaped frame. Vertical & Horizontal supports, minimum 2.5mm and 2mm thick respectively, have to be provided for the structure frame. Extreme side legs shall be illuminated type and should complete the

CLAUSE NO.	TECHNICAL REQUIREMENTS
	overall form and aesthetics of the desk. It shall have concealed cable & wire way management system. Telephone sets shall be mounted on the control desk. Sliding keyboard trays shall be provided on the CD. The exact profile of the desk, dimension and the radius of curvature shall be finalised during detailed engineering stage.
2.02.02	All operator monitors & mice shall be mounted on this CD.
2.02.03	The cabling / wiring between OWS & CPU's, power supply cables etc. shall be aesthetically routed and concealed from view.
2.03.00	**Internal Panel/Desk Items**
	Equipment and devices mounted within the panels/desk shall be mounted on suitable racks/brackets and shall be arranged for convenient access for adjustment and maintenance work.

	SPECIFICATION FOR LOCAL PANELS	SPECIFICATION NO.: PE-SS –999- 145 –054A	
		VOLUME II B	
		SECTION D	
		REV. NO. 03	DATE : 16-09-2013
		SHEET 1 OF 6	

1.0 SCOPE

This specification covers the Design, Manufacture, Inspection and Testing at the manufacturer's works, proper packing for transportation and delivery to site, supervision, erection, and commissioning at site of Local Panels required for control and monitoring of the Auxiliary Plant & Equipment.

2.0 CODES AND STANDARDS

2.1 All the equipments specified herein shall comply with the requirements of the latest issue of the relevant National and International standards.

2.2 As a minimum requirement, the following standards shall be complied with:

a) IS-6005 : 1998 : Code of practice for phosphating of iron and steel.
b) IS-5 : 2007 : Colors for ready mixed paints and enamels.
c) IS-1248:2003 : Direct Acting Indicating Analog Elec Measuring Instruments.
d) IS/IEC 60947:Part 1:2004 : Low Voltage switchgear & control gear: Part-I (General Rules)
e) IS-8828:1996 : Circuit breaker for household and similar installations.
f) IS-13947 (Part-I):1993 : Low Voltage switchgear & control gear : Part-I (General Rules)
g) ISA-18.1:1979 : Annunciator Sequences and Specification
h) NFPA-496:2003 : Purged & Pressurised Enclosure for Electrical Equipment in Hazardous Locations.

3.0 TECHNICAL REQUIREMENTS

3.1 Panel Construction

3.1.1 The local panels shall house the secondary instruments, annunciation system, Single loop controller, Control switches / push buttons, indicating lamps/LED cluster, relays, timers and other devices required for operation and monitoring of the equipment locally.

3.1.2 The panels shall be of free standing type either welded construction on angle iron (minimum section of 50 x 50 x 4 mm) structure or folded construction by sheet metal formation depending upon the equipments to be mounted on it. The panels shall be robustly built and stiffeners as necessary shall be provided.

3.1.3 The panel shall be suitably reinforced to ensure adequate support for all instruments mounted thereon. All welds on exposed panel surfaces shall be ground smooth.

3.1.4 The salient features of construction shall be:

Sheet material: Cold rolled sheet steel
Frame thickness: Not less than 3.0mm
Enclosure thickness: Not less than 2.5 mm for load bearing sections (Mounted with instruments)
1.6 mm for doors and Not less than 2.0 mm for others

Gland plate thickness: 3.0mm
Base channel: ISMC 100 with anti-vibration mounting & foundation bolts.

3.1.5 The panel shall be provided with rear doors with integral lockable handle. The door when locked shall be held at minimum three places. The door width shall not be more than 550mm.The doors shall be provided with suitable stiffeners to prevent buckling. The handle shall be on the right side of the door. The door shall be removable type with concealed hinges to facilitate maintenance work. Suitable pocket inside the door shall be provided for keeping the drawings / documents. Double door shall be provided with suitable glass windows, as per the requirement.

3.1.6 Suitable neoprene gasket shall be provided on all doors and removable covers. Suitable ventilation system along with louvers shall be provided at bottom and top of the doors covered with removable wire mesh.

3.1.7 The class of protection shall be in accordance with IP-42 unless otherwise specified in the data sheet – A (No. PES-145-54A-DS1-0).

3.1.8 All steel surfaces shall be cleaned by sand / pellet blasting, treated for pickling, degreasing and phosphating etc. by seven tank method. The panel shall have a high quality finish and appearance. The panel shall be painted with two coats of primer followed by two coats of epoxy / synthetic enamel based final paint of color shade and finish as given in data sheet-A (No. PES-145A-DS1-0). Minimum thickness of the paint shall be 85 microns for external paint and 70 microns for internal paint.

3.1.9 The cable glands of the required size and type as given in data sheet-A (No. PES-145A-DS1-0) shall be supplied alongwith the Panel.

3.1.10 All operable and indicating devices shall be mounted on the front of the panel while aux. Relays / timers MCBs etc. required for realization of control logics shall be mounted on a mounting plate inside the panel. Auxiliary relays and timers etc. shall be grouped according to the control function.
No operable or indicating devices shall be mounted below 750 mm and above 1800 mm (w.r.t. finished ground level). The devices shall be located in such a way so as to ensure easy access for operation / maintenance.

3.1.11 Single / dual control power supply feeders of voltage class as specified in data sheet-A (No. PES-145A-DS1-0) shall be provided by the purchaser. In case redundant power supply feeders are provided then auto changeover unit shall be mounted on the panel are in the panel supplier's scope. Where DC control power supply is specified an additional 240V, 50 Hz AC supply feeder for powering of space heater and lighting shall be provided by the purchaser. Suitable arrangement shall be provided inside the panel to receive and terminate the power supply feeder(s). For this purpose MCBs of suitable current rating shall be provided by the vendor. A supervisory relay along with a pilot lamp to indicate control supply 'ON' shall be provided on the panel. Any other power supply required for the operation of the devices mounted in the panel shall be arranged by the vendor.

3.1.12 The internal wiring shall be carried out with 1100 volt grade PVC insulated copper multi strand wire / flexible of 1.5mm2 size. AC & DC wires shall be kept separate from each other. Separate coloured wires to be used for AC and DC circuits. All wires shall be properly numbered and identified with ferrules as per the Control scheme / wiring diagram. Wires shall be routed and run through PVC troughs.

3.1.13 Terminal blocks shall be clip on type, 1100 volts grade. Separate terminal blocks shall be used for AC & DC circuits. The terminals shall be suitable for terminating 0.5 mm2 to 2.5mm2 external cables. The TB points in terminal block shall be cage clamp type / screw type. The terminal for ammeters shall be provided with removable links for shorting CTs. Each terminal strip shall be provided with identification strip. The terminal shall not be mounted below 250 mm height from finished floor. The panel shall have ten (20) percent spare terminal.

3.1.14 The interior of each panel shall be suitably illuminated through fluorescent lamps / tube lights with shrouded cover of minimum 15W operable on 240V 50 Hz AC power supply through panel door switch. A 15 Amp. 3-pin Power receptacle shall be provided.

3.1.15 Suitable space heaters operable on 240 Volts 50 Hz AC power system shall be provided at the panel bottom. These shall be designed to maintain the panel temperature five (5) deg. C above the ambient temperature during maintenance shutdown. Suitable isolating and control devices comprising of MCB, thermostat etc. shall be provided for the space heater.

3.1.16 The panel shall be provided with a copper earth bus of 25 x 6 mm size running throughout the width of the panel. It shall be terminated internally with 10 mm bolts at extreme ends for connection to; main station earth. The panel mounted equipments / devices shall be connected to earth bus through green coloured PVC insulated stranded copper conductor of 2.5 mm2 size.

3.1.17 Local Panel shall be provided with main name plate of 150 mm x 40 mm size having inscription of 20 mm height. The individual devices on the panels shall be as provided with separate name plate with inscription of 3 mm height. The instrument / devices shall be provided with stick on label plates inside the panel. The material of the main and individual labels shall be three (3) ply 3 mm thick Traffolyte

Sheet / 2 mm Anodised Aluminium Plate. The inscription shall be with white letters on black background on traffolyte sheet. The labels shall be fixed by self tapping non-rusting screws.

3.1.18 Vendor shall furnish electric load and heat load list (in case panel is to be placed in ac environment) of each panel.

3.2 Hazardous Area Panel Requirement

3.2.1 The Local Panel located in hazardous area shall be pressurized as per NFPA-496 requirements to render it non-hazardous. Alarms shall be provided for local and remote annunciation when pressurisation falls below 2.5 mm of water column. Protection shall be of type Z of NFPA-496. It shall not be possible to switch ON the power of purged section unless it is purged as per the recommendation of NFPA-496. Vendor must provide a protective device on the panel to protect the panel from over pressurisation.

3.2.2 Vendor shall supply pressurisation kit consisting of valves, restriction orifices, dual filter regulation, pressure gauges, pressure switches, rotameter etc. Pressurisation kit shall be surface mounting on a metal board and located outside the local panel. Pressurisation kit shall further consist of solenoid valve flow switch, timer blow off safety device etc., so as to make purging fully automatic. However final start shall be manual. Panel protection against over pressure to be provided as per NFPA-496.

3.2.3 Pressurised local control panel pressurization kit assembly design shall provide minimum leakage flow through the Local Control Panel. Panel venting shall be as per NFPA-496.

3.2.4 All components in the local panel like indicating instruments, push buttons switches, lamps etc., which are required to be energized without panel pressurization or before completion of purge cycle shall be explosion proof as per NEMA-7 & suitable for area classification.

3.2.5 All push buttons etc. requiring frequent operation during machine running shall have good positive sealing. Weatherproof housing or cover to be provided wherever necessary. Vendor shall provide pressurisation bypass switch outside explosion proof enclosure of pressurized panel with lamp indication. This shall be used only during maintenance. All hinges, screws, other non-painted metallic parts shall be of stainless steel material.

3.2.6 Provision to switch off manually all types of power shall be provided in the panel. In addition, it shall also be possible to switch off power circuits / components which are powered from motor control centre or control room manually in case of pressurization failure. All such cables from MCC and main control room shall be terminated in explosion proof boxes (NEMA-7).

3.3 Control & Monitoring devices

3.3.1 Instruments like Indicators, recorders, single loop controllers etc. as applicable and specified elsewhere for the plant / equipment shall be supplied and mounted on the panel.

3.3.2 Alarm Annunciator System

It shall be solid state discrete facia type having a sequence of ISA-S18.1A or as specified, opaque facia windows of 70 mm x 50 mm size, having two (2) lamps per window, and hooter of 10W, and provision for repeat group alarm at remote. The annunciator shall be provided with ten (10) percent spare windows or minimum two (2) windows along with electronics.

3.3.3 Relays

The relays shall be electromagnetic type suitable for specified control supply. Its contact configuration and rating shall be suitable for the specified control function. However minimum contact rating shall be 5 Amp AC & 2 Amp DC as applicable. There shall be ten (10) percent spare contacts.

3.3.4 Timers

The timers shall be electronic type suitable for specified control supply. Its contact configuration and rating shall be suitable for the specified control function. However, minimum contact rating shall be 5 Amp AC & 2 Amp DC as applicable.

3.3.5 Control / Selector Switches

Switches shall be Rotary Cam type with minimum of 5 Amps AC & 2 Amp DC continuous current rating. Selector switches shall be stay put type while control switches shall be spring-return-to-neutral type. Contact configuration and rating shall be as per the control function requirement. The switches shall be lockable type wherever specified. Each switch shall be provided with engraved plates indicating the switch position / functions.

3.3.6 Push Buttons / Indicating Lights

The push buttons shall be momentary action self-resetting type, however stop P.B. for unidirectional drives shall be provided with manual reset facility. Its contact configuration & rating shall be as required for the control function but minimum 2 NO + 2 NC of 5 Amp. AC rating. It shall have round coloured projecting tab and engraved escutcheon plate / inscription plate. Colour coding of push buttons shall be as under:

RED	Motor OFF / Valve CLOSE	YELLOW	Alarm acknowledge	Left Hand Side
GREEN	Motor ON / Valve OPEN	BLACK	Lamp test	Right Hand Side

Indicating lights shall be suitable for direct connections across specified power supplies. It shall be fitted with built in resistance to prevent circuit tripping on shorting of lamp filament. It shall be fitted with LED cluster type lamp replaceable from front.

GREEN	Motor OFF / Valve CLOSED condition	AMBER	Motor tripped	Left Hand Side
RED	Motor ON / Valve OPEN condition	WHITE	Normal / healthy	Right Hand Side

3.3.7 Ammeters

Ammeter shall be 96 x 96 mm size, 90 deg. deflection, 1.5% accuracy, 1 Amp. CT operated or with 4-20mA input and Flush mounting type as called for in the data sheet-A (No. PES-145-54A-DS1-0). Ammeters for motors shall have six (6) times folded scale at upper end to enable motor starting current indication

3.3.8 Miniature Circuit Breaker (MCB)

These shall be instantaneous magnetic trip type for short circuit in addition to current time inverse delayed thermal trip feature for over current protection. The housing of MCB shall be made of non-ignitable, high impact material. It shall have minimum short circuit rating of 9 KA for AC Voltages and 4 KA for DC Voltages.

3.3.9 Makes of various instruments / devices shall be as given below

1.	Alarm Annunciators	:	Procon / IIC
2.	Ammeters	:	AEP / IMP
3.	Control / Selector Switches	:	Alsthom / Kaycee / Siemens / L&T
4.	Push Buttons / Indicating Lamps	:	Siemens / L&T / Teknic / Alsthom
5.	Auxiliary Relays	:	Jyoti / Siemens / L&T / OEN
6.	Timers	:	L&T / Alsthom / Bhartiya Cutler Hammer
7.	MCBs	:	S&S Power Engg. / Indo Asian / MDS
8.	Terminal Blocks	:	Jyoti / Elmex

4.0 TESTING AND INSPECTION

4.1 The bidder shall adopt suitable quality assurance program to ensure that the equipments offered will meet the specification requirements in full.

4.2 BHEL's standard Quality Plan for LCP is enclosed with the specification. The bidder shall furnish his acceptance to BHEL's QP and submit the signed and stamped copy of QP along with the offer.

4.3 The vendor shall conduct the following tests as a minimum requirement:

4.3.1 Routine Tests

1. High Voltage (H.V.)
2. Insulation Resistance (I.R.)
3. Functional

4.3.2 Type Tests

1. Enclosure Class Test

5.0 SPARES AND CONSUMABLES

5.1 Commissioning Spares and consumables

The bidder shall supply all commissioning spares and consumables 'as required' during Start-up, as part of the main equipment supply.

5.2. Mandatory Spares

The bidder shall offer alongwith main offer, the Mandatory Spares as specified elsewhere in the specification. The Mandatory Spares offered shall be of the same make and type as the main equipment.

5.3. Recommended Spares

The bidder shall furnish a list of Recommended Spares indicating the normal service expectancy period and frequency of replacement; quantities recommended for 3 years operation alongwith unit rate against each item to enable BHEL/BHEL's Customer to place a separate order later, if required.

6.0 DRAWINGS AND DOCUMENTS

6.1 The bidder shall furnish the following documents in required number of copies along with the bid :

1. Data Sheet no. PES-145A-DS1-0
2. General Arrangement Drawing.
3. Catalogue and technical information for instruments and devices.
4. Quality Plan.

6.2 The vendor shall furnish the following documents in required number as agreed after the award of contract:

1. Data Shee No. PES-145A-DS2-0
2. GA Drawing indicating layout of instruments, construction details, foundation details, cable gland plate alongwith cable glands and all details mentioned in this specification.
3. Control Schematic Diagram along with grouping of different terminals for various functions.
4. Catalogue and technical information for instruments and devices with selected options clearly marked.
5. O&M Manuals.
6. "As Built" Drawing.
7. CDs.

7.0 MARKING AND PACKING

7.1 Panel with all instruments / devices mounted on it shall be suitably packed & protected for the entire period of despatch, storage and erection against impact, abrasion, corrossion, incidental damage due to vermin, sunlight, high temperature, rain moisture, humidity, dust, sea-water spray (where applicable) as well as rough handling and delays in Transit and storage in open.

8.0 APPLICABLE DATA SHEET FORMS

This document shall be read with one or more of the following data sheet forms :

- Data sheet A&B for Local Panels : Data sheet no. PES-145A-DS1-0
- Data sheet C for Local Panels : Data sheet no. PES-145A-DS2-0

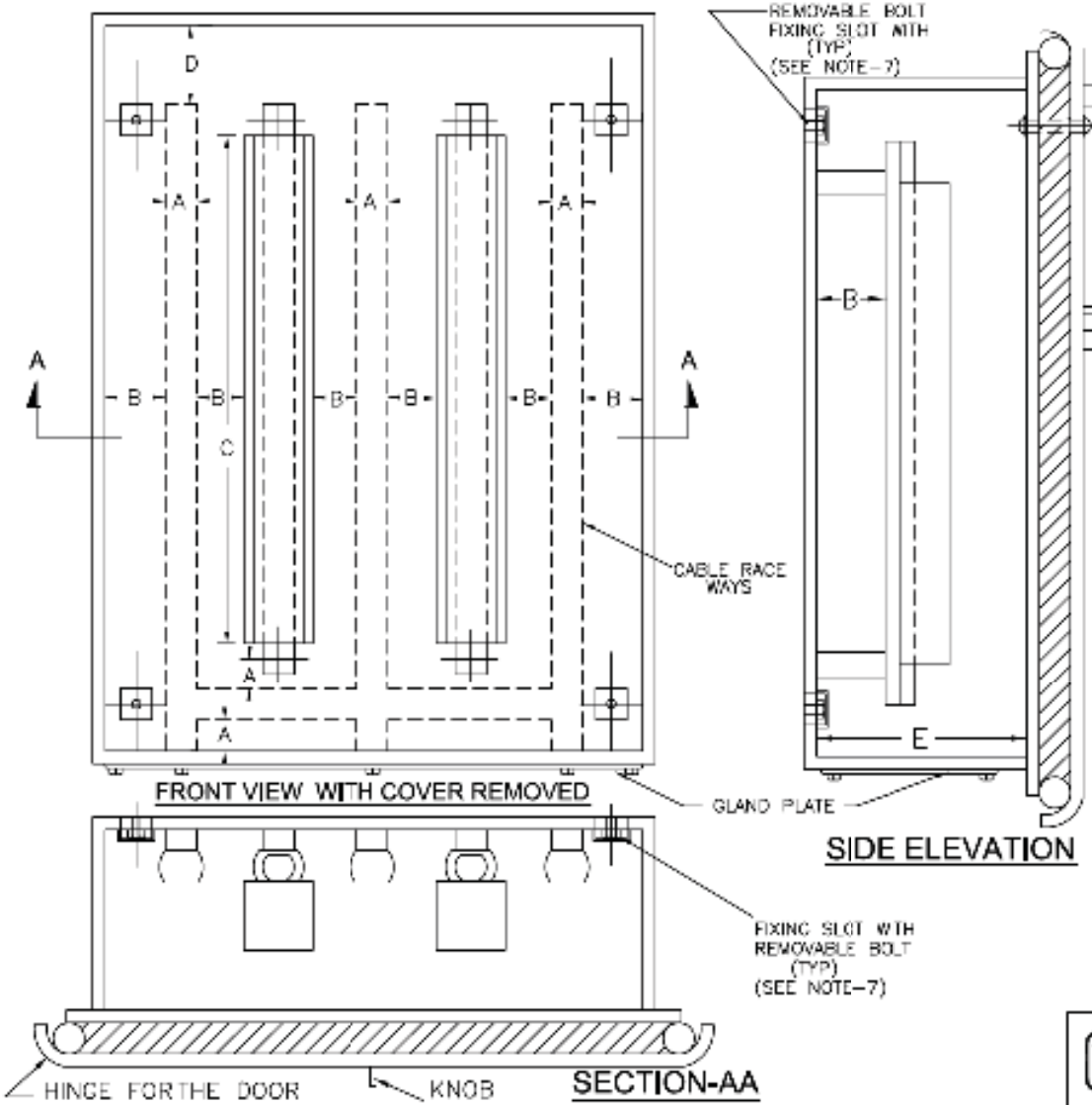

FRONT VIEW WITH COVER REMOVED

SIDE ELEVATION

SECTION-AA

A – 75 mm
B – 25 mm
C – SEE NOTE-4
D – 100 mm
E – 150 mm

NOTES:–

1. JUNCTION BOXES SHALL HAVE GLAND PLATES AT THE BOTTOM OF THE BOX ONLY.
2. TUBULAR TYPE GASKETS WILL BE USED.
3. FRP JUNCTION BOXES, SHALL BE PROVIDED WITH POLYEUTHERENE COATING. ALSO REFER SUB SECTION INST CABLE, PART-B SECTION-VI FOR DETAILES.
4. DIMENSION OF 'C' SHALL BE BASED ON NO. OF TERMINAL BLOCKS.
5. THE EXACT TYPE & DIMENSION OF JUNCTION BOXES TO BE USED FOR A PARTICULAR APPLICATION SHALL BE AS DECIDED DURING DETAIL ENGG. STAGE AND SHALL BE SUBJECT TO EMPLOYER's APPROVAL WITHOUT ANY PRICE REPERCUSSION.
6. THE KNOB FOR ALL THE JUNCTION BOXES SHALL BE IDENTICAL.
7. ANY TYPE OF SEALED FIXING ARRANGEMENT AS PER MANUFACTURER's STANDARD CAN ALSO BE PROVIDED SUBJECT TO EMPLOYER's APPROVAL.

FOR TENDER PURPOSE ONLY

एन टी पी सी NTPC

N T P C LIMITED
(A GOVERNMENT OF INDIA ENTERPRISE)
ENGINEERING DIVISION

REV.NO.	DESCRIPTION	DRAWN	DESIGN	CHKD.	M	E	C	C&I	ARCH.	APPD	DATE
D	GENERALLY REVISED		JN	KS							21.08.12
C	GENERALLY REVISED		JN	KS							04.08.09
B	GENERALLY REVISED	S.K.	A.R	PS							
A	FIRST ISSUE	S.K.	A.R	PS							04.06.03

CLEARED BY

PROJECT: TYPICAL THERMAL POWER PLANT

TITLE: G.A. OF JUNCTION BOX

SIZE	SCALE	DRG. NO.	REV. NO.
A4	N.T.S.	0000-999-POI-A-017	D

This document is the property of NATIONAL THERMAL POWER CORPORATION LTD. No part of this document will be reproduced by any means without the written permission.

This drawing and the design it covers are the property of NTPC LTD. and must not be copied, loaned or retained either in part or in whole without written permission. Any contravention is liable for prosecution.

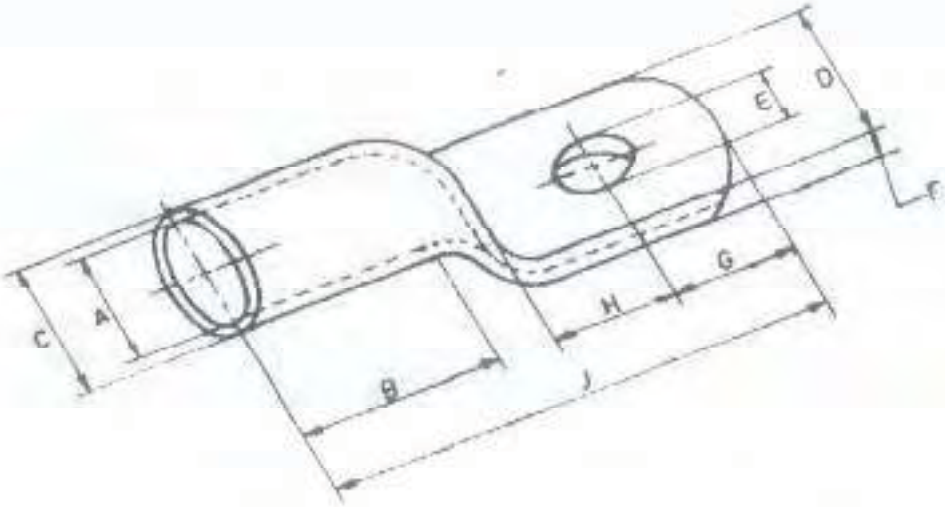

S.No.	Conductor Size HT Power Cables	E (Dimensions in mm)
1	95 sq.mm	13
2	150 sq.mm	17
3	300 sq.mm	17

REV. NO.	DESCRIPTION	M	E	C	C&I	MKT	APPD	DATE
RA	FOR TENDER PURPOSE							

CLEARED BY

NTPC LTD.

PROJECT: STANDARD

TITLE: TYPICAL DRAWING FOR CABLE LUG

SIZE: A4 | SCALE: N.T.S. | DWG. NO. D000-311-POB-A-001 | REV. NO.

INSTRUMENTATION CABLE, CABLE INTERCONNECTION AND TERMINATION PHILOSOPHY

CLAUSE NO.	TECHNICAL REQUIREMENTS

1.00.00 **INSTRUMENTATION CABLE, CONTROL & POWER SUPPLY CABLE, INTERNAL WIRING AND ELECTRICAL FIELD CONSTRUCTION MATERIAL (CABLE SUB-TRAYs ETC)**

1.01.00 **General requirements**

1.01.01 All cables including special cables, internal wiring and electrical field construction material shall conform to this specification, Employer approved detail engineering drawings & documents and the latest edition of the relevant standards & guidelines. The Bidder shall furnish all material and services required for the completeness of the work identified in his scope as per this specification.

1.01.02 The Contractor shall supply, erect, terminate and test all instrumentation cables for control and instrumentation equipment/devices/systems included under Contractor's scope and ensuring completeness of the control system.

1.01.03 Any other application where it is felt that instrumentation cables are required due to system/operating condition requirements, are also to be provided by Contractor.

1.01.04 Other type of cables like fiber optic/co-axial cables for system bus, cables for connection of peripherals etc. (under Contractor's scope) are also to be furnished by the Contractor.

1.01.05 Contractor shall supply all cable erection and laying hardware from the main trunk routes like branch cable trays/sub-trays, supports, flexible conduits, cable glands, lugs, pull boxes etc. on as required basis for all the systems covered under this specification.

1.01.06 Wherever the quantity has been defined as on as required basis, the same are to be furnished by contractor on as required basis within his quoted lump sum price without any further cost implication to the Employer.

2.00.00 **SPECIFICATION OF INSTRUMENTATION CABLE**

2.01.00 **Common Requirements**

S. No.	Property	Requirement
1	Operating Voltage	225 V (peak value)
2.	Codes and standard	All instrumentation cables shall comply with VDE 0815, VDE 0207, Part 4, Part 5, Part 6, VDE 0816, VDE 0472, SEN 4241475, ANSI MC 96.1, IS-8784, IS-10810 (latest editions) and their amendments read along with this specification.
3.	Continuous operation suitability	At 205 Deg C for Type-C cables & heat resistant cables, at 70 Deg C for all other type of cables.

CLAUSE NO.	TECHNICAL REQUIREMENTS

S. No.	Property	Requirement
4.	Marking :- a.*Progressive automatic on-line sequential marking of length in meters to be provided at every one meter on outer sheath* b.Marking to read 'FRLS' to be provided at every 5 meters on outer sheath except for Type-C cable c.Durable marking at intervals not exceeding 625 mm shall include manufacturer's name, insulation material, conductor's size, number of pairs, voltage rating, type of cable, year of manufacturer to be provided on outer sheath.	
5.	Allowable Tolerance on overall diameter	+/- 2 mm (maximum) over the declared value in data sheet
6.	Variation in diameter	Not more than 1.0 mm throughout the length of cable.
7.	Ovality at any cross-section	Not more than 1.0 mm
8.	CAGE-CLAMP suitability	To be provided
9.	Color	The outer sheath shall be of blue color.
10.	Others	Repaired cables shall not be acceptable.

2.02.00 **Specific Requirements**

Specification Requirements	Type-A cable	Type-B cable	Type F & G cable	Type-C cable
A. CONDUCTORS				
Cross section area	0.5 sq. mm			
Conductor material	ANSI type KX	ANSI type SX	Annealed bare copper	ANSI type KX
Colour code	Yellow-Red	Black-Red	As per VDE-815	Yellow-Red
Conductor Grade	As per ANSI MC 96.1		Electrolytic	As per ANSI MC 96.1
No & dia of strands	7x0.3 mm (nom)			
No. of Pairs	2	2	2/4/8/12/16/24 / 48	2

CLAUSE NO.	TECHNICAL REQUIREMENTS

Specification Requirements	Type-A cable	Type-B cable	Type F & G cable	Type-C cable
Max. conductor loop resistance per Km (in ohm) at 20 deg. C	As per ANSI MC 96.1		73.4	As per ANSI MC 96.1
Reference Standard	As per ANSI MC 96.1		VDE : 0815	As per ANSI MC 96.1
B. INSULATION				
Material	Extruded PVC type YI 3			Teflon (i.e. extruded FEP)
Thickness in mm (Min/Max)	0.25/0.35			0.4 / 0.50 (nominal)
Volume Resistivity (Min) in ohm-cm	1×10^{14} at 20 deg. C & 1×10^{11} at 70 deg. C.			2.8×10^{14} at 20 deg. C & 2×10^{11} at 205 deg. C.
C. PAIRING & TWISTING				
Max. lay of pairs (mm)	50			
Single layer of binder tape on each pair provided	Each core printed with number or Numbered binder tape to be provided on each pair		Yes	Each core printed with number or Numbered binder tape to be provided on each pair
Bunch (Unit Formation) for more than 4P	N.A		To be provided	N.A
Conductor /pair identification as per VDE0815	N.A.		To be provided	N.A.
D. SHIELDING				
Type of shielding	Al-Mylar tape			
Individual pair shielding	No		To be provided for F-type cable	No
Minimum thickness of Individual pair shielding	No		0.028mm (28 micron)	No

CLAUSE NO.	TECHNICAL REQUIREMENTS			
	Specification Requirements	**Type-A cable**	**Type-B cable**	**Type F & G cable**	**Type-C cable**
	Overall cable assembly shielding	To be provided			
	Minimum thickness of Overall cable assembly shielding	0.055 mm (55 micron)			
	Coverage / Overlapping	100% / 20%			
	Drain wire provided for individual shield	N.A.		Yes (for F-type) Size- 0.5 sqmm No of strands-7 Dia of strands- 0.3mm Annealed Tin coated copper	N.A.
	Drain wire provided for overall shield	Yes, Size- 0.5 sqmm,No of strands-7,Dia of strands-0.3mm,Annealed Tin coated copper			
	E. FILLERS (if applicable)				
	Non-hygroscopic, flame retardant	To be provided			
	F. OUTER SHEATH				
	Material	Extruded PVC compound YM1 with FRLS properties			Teflon (i.e. extruded FRP)
	Minimum Thickness at any point	1.8 mm			0.4 mm
	Nominal Thickness at any point	>1.8 mm			0.5 mm
	Resistant to water, fungus, termite & rodent attack	Required			
	Minimum Oxygen index as per ASTMD-2863	29 %			N.A.
	Minimum Temperature index as per ASTMD-2863	250 deg.C			N.A.

CLAUSE NO.	TECHNICAL REQUIREMENTS

Specification Requirements	Type-A cable	Type-B cable	Type F & G cable	Type-C cable
Maximum Acid gas generation by weight as per IEC-60754-1	20%			N.A.
Maximum Smoke Density Rating as per ASTMD-2843	60% (defined as the average area under the curve when the results of smoke density test plotted on a curve indicating light absorption vs. time as per ASTMD-2843)			N.A.
Reference standard	VDE207 Part 5,VDE-816			VDE207 Part 6 ASTM D2116
G. Electrical Parameters				
Mutual Capacitance Between Conductors At 0.8 Khz (Max.)	200 nF/km		120 nF/km for F type 100 nF/km for G-type	200 nF/km
Insulation Resistance (Min.)	100 M Ohm/Km			
Cross Talk Figure (Min.) At 0.8 Khz	60 dB		60 dB	60dB
Characteristic Impedance (Max) At 1 Khz	N.A.		320 OHM FOR F-TYPE 340 OHM FOR G-TYPE	N.A.
Attenuation Figure At 1 Khz (Max)	N.A.		1.2 db/km	N.A.
H. COMPLETE CABLE				
Complete Cable assembly	Shall pass Swedish Chimney test as per SEN-SS 4241475 class F3.			N.A.

CLAUSE NO.	TECHNICAL REQUIREMENTS

Specification Requirements	Type-A cable	Type-B cable	Type F & G cable	Type-C cable
Flammability	Shall pass flammability as per IEEE-383 read in conjunction to this specification			As per manufacturer's standard subject to employer's approval
I. CABLE DRUM				
Type	Non-returnable wooden drum (wooden drum to be constructed from seasoned wood free from defects with wood preservative applied to entire drum) or steel drum.			
Length	1000 m ± 5% for up to & including 12 pairs 500 m ± 5% for above12 pairs			

Note: Heat resistant instrumentation cable shall have same specification as of G/F type instrumentation cable as specified above, except that insulation and outer sheath material shall be Teflon and cable shall be suitable for continuous operation at 205 Deg. C

CLAUSE NO.	TECHNICAL REQUIREMENTS

3.07.00 Penetration of water resistance and impact resistance shall be as per IEC standard.

4.00.00 SPCIFICATION OF CONTROL & POWER SUPPLY CABLES

Refer Electrical sub-sections

5.00.00 INSTRUMENTATION CABLE INTERCONNECTION AND TERMINATION PHILOSOPHY

The cable interconnection philosophy to be adopted shall be such that extensive grouping of signals by large scale use of field mounted Group Junction Boxes (JBs) at strategic locations (where large concentration of signals are available, e.g. valves limit & torque switches, switchgear) is done and consequently cable with higher number of pairs are extensively used. The details of termination to be followed are mentioned in the given Table A.

TABLE A: CABLE TERMINATION TO BE FOLLOWED

Application		Type Of Termination		Type Of Cable
FROM (A)	TO (B)	END A	END B	
Valves/dampers drives (Integral Junction box)	Marshalling / Marshalling – cum Termination Cubicle / local group JB	Plug in connector	Post mount cage clamp type.	G
Transmitters, Process Actuated switches mounted in LIE/LIR	Integral Junction box of LIE/LIR	Plug in connector	Cage clamp (Rail mount) type.	F,G
RTD heads	Local junction box	Plug in connector	Cage clamp (Rail mount) type.	F
Thermocouple	Local junction box / CJC box (if applicable)	Plug in connector	Cage clamp (Rail mount) type.	A, B, C*
Other Field mounted Instrument	Local JB / Group JB	Plug in connector	Cage clamp (Rail mount) type.	F,G
RTD	Temperature transmitter	Plug in connector	Screwed, Cage clamp type	F
Thermocouple	Temperature transmitter	Plug in connector	Screwed, Cage clamp type	A, B, C*
Local Junction box, Temperature Transmitter, Int. Junction box of LIE/ LIR/ MCC/SWGR	Group JB	Cage clamp (Rail mount) type.	Cage clamp (Rail mount) type.	F,G

CLAUSE NO.	TECHNICAL REQUIREMENTS

Application		Type Of Termination		Type Of Cable
FROM (A)	TO (B)	END A	END B	
Local Junction box, Temperature Transmitter, Int. Junction box of LIE/ LIR/ Group JB / MCC/SWGR	Marshalling / Marshalling – cum Termination Cubicle	Cage clamp (Rail mount) type.	Cage clamp (Post mounted) type.	F,G
Marshalling cubicle/ Termination Cabinet	Electronic system cabinet	Cage clamp (Post mounted) type.	Plug-in connector / other system as per Mfr.'s Standard	Internal wiring
Marshalling/ Termination System Cabinets	UCD mounted equipments	Cage clamp (Post mounted) type.	Plug in connector / Cage clamp type (rail mounted).	F,G (with plug-in connect or at one end)
DDCMIS/PLC cabinets	PC, Printers etc.	Plug in connector	Plug in connector	Mfr.'s Standar d

Notes

1 Normally 10% spare cores shall be provided when the numbers of pairs of cables are more than four pairs, except for pre-fabricated cables which shall be as per manufacturer's standard.

2 For analog signals, individual pair shielding & overall shielding & for Binary signals, only overall shielding of instrumentation cables shall be provided.

3 * For high temperature applications only.

4 . For connection between field/JB and DDCMIS marshalling cabinet

Minimum 4 pair instrumentation cable shall be used.

5 All the spare cores of instrumentation cable have to be terminated in Marshalling cabinets/ DCS panel end.

6 Not used.

6.00.00 TERMINAL BLOCKS

6.01.00 All terminal blocks shall be rail mounted/post mounted, cage clamp type with high quality non-flammable insulating material of melamine suitable for working temperature of 105 deg. C. The terminal blocks in field mounted junction boxes, temperature transmitters, instrument enclosures/racks, etc., shall be suitable for cage clamp connections. The terminal blocks in Control Equipment Room logic/termination/marshalling cubicles shall be suitable for post

CLAUSE NO.	TECHNICAL REQUIREMENTS
	mounted cage clamp connection at the field input end. The exact type of terminal blocks to be provided by the Bidder and the technical details of the same including width etc. shall be subject to Employer's approval.
6.02.00	All the terminal blocks shall be provided complete with all required accessories including assembly rail, locking pin and section, end brackets, partitions, small partitions, transparent covers, support brackets, distance sleeves, warning label, marking, etc.
6.03.00	The marking on terminal strips shall correspond to the terminal numbering on wiring diagrams. At least 20% spare unused terminals shall be provided everywhere including local junction boxes, instrument racks/enclosures, termination/marshalling cabinets, etc. All terminal blocks shall be numbered for identification and grouped according to the function. Engraved labels shall be provided on the terminal blocks.
6.04.00	For terminating each process actuated switches, drive actuators, control valves, Thermocouple, RTD, etc. in Local Junction Boxes, etc, refer Drg no. 0000-999-POI-A-065.
6.05.00	The terminal blocks shall be arranged with at least 100 mm clearance between two sets of terminal blocks and between terminal blocks and junction box walls.
7.00.00	**INTERNAL PANELS/ SYSTEM CABINETS WIRING**
7.01.00	Internal panel/cabinet wiring shall be of multi-stranded copper conductor with FRLS PVC insulation without shield and outer sheath meeting the requirements of VDE 0815.
7.02.00	All internal wires shall be provided with tag and identification nos. etched on tightly fitted ferules at both ends. All wires directly connected to trip devices shall be distinguished by one additional red colour ferrule.
7.03.00	All external connection shall be made with one wire per termination point. Wires shall not be tapped or spliced between terminal points.
7.04.00	All floor slots of desk/panels/cabinets used for cable entrance shall be provided with removable gasketed gland plates and sealing material. Split type grommets shall be used for prefabricated cables.
7.05.00	All the special tools as may be required for solder less connections shall be provided by Bidder.
7.06.00	Wire sizes to be utilised for internal wiring.
	(i) Current (4-20 mA), low voltage signals (48V); Ammeter/Voltmeter circuit, control switches etc. for electrical system. — 0.5 Sq.mm.
	(ii) Power supply and internal illumination. — 2.5Sq.mm. minimum (shall be as per load requirement.)

CLAUSE NO.	TECHNICAL REQUIREMENTS
8.02.00	Cables shall be segregated as per IEEE Std.-422. In vertically stacked trays, the higher voltage cable shall be in higher position and instrumentation cable shall be in bottom tier of the tray stack. The distance between instrumentation cables and those of other system shall be as follows: From 11 kV/6.6 kV/3.3 kV tray system - 914 mm From 415V tray system - 610 mm From control cable tray system - 305 mm
8.03.00	Cables shall terminate in the enclosure through cable glands. All cable glands shall be properly gasketed. Sealing (to prevent ingress of dust entry and propagation of fire) shall be provided for all floor slots used for cable entrance. Compression cable glands (double for armoured and single for other cables) shall be provided.
8.04.00	Not in use
8.05.00	The cables emanating from redundant equipment/devices shall be routed through different paths. The above segregation of cables & wiring for redundant equipments/devices shall be in accordance with IEEE-Std-422.
9.00.00	**CABLE LAYING AND ACCESSORIES**
9.01.00	CABLE LAYING 1 Cables shall be laid strictly in line with cable schedule. 2 Identification tags for cables. Indelible tags to be provided at all terminations, on both sides of wall or floor crossing, on each conduit/duct/pipe entry/exit, and at every 20 m in cable trench/tray. 3 Cable tray numbering and marking. To be provided at every 10m and at each end of cable way & branch connection. 4 No jointing is permissible for Instrumentation cables. For other cables Jointing for more than 250 Meters run of cable shall be permitted. 5 Buried cable protection With concrete slabs; Route markers at every 20 Meters along the route & at every bend. 6 Road Crossings Cables to pass through buried high density PE pipes encased in PCC. At least 300 mm clearance shall be provided between - HT power & LT power cables, - LT power & LT control/instrumentation cables,

CLAUSE NO.	TECHNICAL REQUIREMENTS
	Spacing between cables of same voltage grade shall be in accordance with the derating criteria adopted for cable sizing. 7 Segregation (physical isolation to prevent fire jumping) a All cable associated with the unit shall be segregated from cables of other Units. b Interplant cables of station auxiliaries and unit critical drives shall be segregated in such a way that not more than half of the drives are lost in case of single incident of fire. 8 Cable clamping All cables laid on trays shall be neatly dressed up & suitably clamped/tied to the tray. For cables in trefoil formation, trefoil clamps shall be provided. 9 Optical fiber cables (OFCs) : Outside Building Area - to be laid necessarily inside GI conduit with support from cable tray/Trestle structure **Inside Building Area – to be laid on separate cable sub-trays** While buried- in separate burried trench approx.1.0 meter depth, to be laid in 2" rodent proof HDPE conduits covered with sand, brick, laid breadth-wise and soil along the pipe line route by contractor; While crossing roads - to be laid in GI/ rodent proof HDPE conduits with sand filling at bottom and sand, soil filling at top with cement concrete; While crossing canals/river- to be laid in rodent proof HDPE conduits within hume pipe. 10 **Laying of Network Cable (UTP/STP) :** **Out side Building Area- to be laid necessarily inside GI conduits with support from cable tray / Trestle structure.** **Inside Building Area- to be laid necessarily inside GI conduits on separate cable sub-trays.**
9.02.00	Bidder shall supply and install all cable accessories and fittings like Light Interface Units, Surge suppressors, Opto isolators, Interface Converters, Fibre Optic Card Cage, Fibre Optic Line Driver, Repeater / Modem (for Optical Fibre Cables), cable glands, grommets, lugs, termination kits etc. on as required basis.
9.03.00	Cables, which terminate in cabinets of draw out sections shall have sufficient cable coiled in the bottom of the cabinet to permit full withdrawal of draw out sections without disconnecting the cables. When prefabricated cables with factory connectors on both ends are longer than required, the excess cable shall be coiled in the bottom of one or both termination cabinets.
9.04.00	The Bidder shall be responsible for proper grounding of all equipment under this package. Further, proper termination of cable shields shall be verified and the grounding of the same shall be coordinated so as to achieve grounding of all instrumentation cable shields at same potential. This shall be completed prior to system tests.

CLAUSE NO.	TECHNICAL REQUIREMENTS

9.05.00 The Contractor shall take full care while laying / installing cables as recommended by cable manufacturers regarding pulling tensions and cable bends. Cables damaged in any way during installation shall be replaced at the expense of the Contractor.

10.00.00 FIELD MOUNTED LOCAL JUNCTION BOXES

(i)	No. of ways	12/24/36/48/64/72/96/128 with 20% spares terminals.
(ii)	Material and Thickness	4mm thick Fiberglass Reinforced Polyester (FRP).
(iii)	Type	Screwed at all four corners for door. Door gasket shall be of synthetic rubber.
(iv)	Mounting clamps and accessories	Suitable for mounting on walls, columns, structures etc. The brackets, bolts, nuts, screws, glands required for erection shall be of SS, included in Bidders scope of supply.
(v)	Type of terminal blocks	Rail mounted cage-clamp type suitable for conductor size upto 2.5 mm^2. A M6 earthing stud shall be provided.
(vi)	Protection Class	IP: 55 minimum for indoor & IP-65 minimum for outdoor applications.
(vii)	Grounding	To be provided.
(viii)	Color	RAL 7035

11.00.00 CONDUITS

11.01.00 Conduits shall be generally used for interconnecting cables from field instruments to Local JB's. All rigid conduits, couplings and elbows shall be hot dipped galvanised rigid mild steel in accordance with IS: 9537 Part-I (1980) and Part-II (1981). The conduit interior and exterior surfaces shall have continuous zinc coating with an overcoat of transparent enamel lacker or zinc chromate. Flexible conduit shall be heat resistant **terne coated steel** with , water leak, fire and rust proof protected *for the areas of* Mills,Drum, Main Steam, RH steam Air Heaters and Furnace, BFPDT's .

And for remaining applications, water leak, fire and rust proof flexible GI conduits shall be provided. The temperature rating of flexible conduit shall be suitable for actual application.

11.02.00 All rigid conduit fittings shall conform to the requirements of IS: 2667, 1976. Galvanized steel fitting shall be used with steel conduit. All flexible conduit fittings shall be liquid tight, galvanized steel. The end fittings shal be compatible with the flexible conduit supplied.

11.03.00 Conduit sealing, explosion proof, dust proof and other types of special fittings shall be provided as required by these specifications and shall be consistent with the area and equipment with which they are installed. Fittings installed outdoors and in damp locations shall be sealed and gasketed. Hazardous area fittings and conduits sealing shall conform with NEC requirements for the area classification.

11.04.00 Contractor shall provide double locknuts on all conduit terminations not provided with threaded hubs and couplings. Water tight conduit unions and rain tight conduit hubs shall be

CLAUSE NO.	TECHNICAL REQUIREMENTS
	utilised for all the application which shall be exposed to weather. Moisture pockets shall be eliminated from conduits.
11.05.00	Conduits shall be securely fastened to all boxes and cabinets.
12.00.00	**CABLE SUB-TRAY & SUPPORT**
12.01.00	The cable sub-trays and the supporting system, to be generally used between Local/Group JBs and the main cable trays and the same shall be furnished and installed by the Contractor. It is the assembly of sections and associated fittings forming a rigid structural system used to support the cable from the equipment or instrument enclosure upto the main cable trays (trunk route).
12.02.00	The covers on the cable sub-trays shall be used for protection of cables in areas where damage may occur from falling objects, welding spark, corrosive environment, etc. & shall be electrically continuous and solidly grounded.

INSTRUMENT STUB DETAILS

12319/2020/PS-PEM-MAX

PRESS. MEASUREMENT

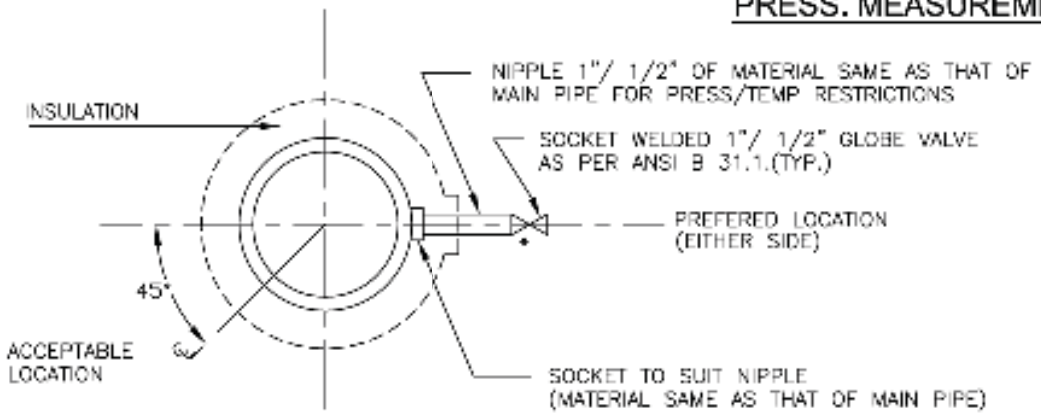

ELEVATION
LIQUID SERVICE

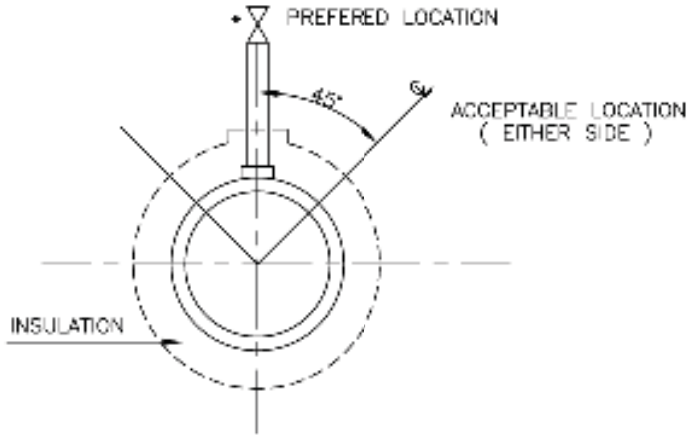

ELEVATION
STEAM SERVICE

PRESSURE CONNECTION ON HORIZONTAL PIPE

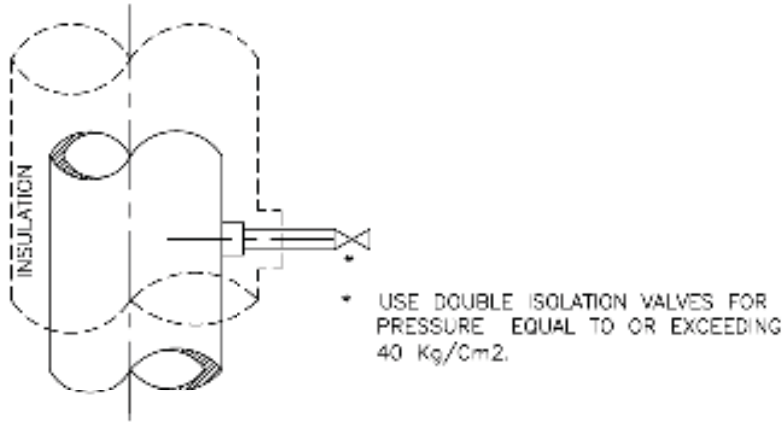

ELEVATION
LIQUID OR STEAM SERVICE

PRESSURE CONNECTIONS ON VERTICAL PIPES

FOR TENDER PURPOSE ONLY

NTPC — N T P C LIMITED (A GOVERNMENT OF INDIA ENTERPRISE) ENGINEERING DIVISION

PROJECT: TYPICALTHERMAL POWER PROJECT

TITLE: INSTRUMENT SOURCE CONNECTION DETAILS

REV. NO.	DESCRIPTION	DRAWN	DESIGN	CHKD.	M	E	C	CM	ARCH.	APPD.	DATE
A	FIRST ISSUE							T.D.			

CLEARED BY 349\562

SIZE	SCALE	DRG. NO.	REV. NO.
A4	N.T.S.	0000-999-POI-A-035	A

LDS-(3X200+3X500+1X500) MW KORBA

This document is the property of NATIONAL THERMAL POWER CORPORATION LTD.
No part of this document will be reproduced by any means without the written permission.

PRESSURE MEASUREMENT

(SYSTEM PR.>40Kg/Sq Cm CL 9000)

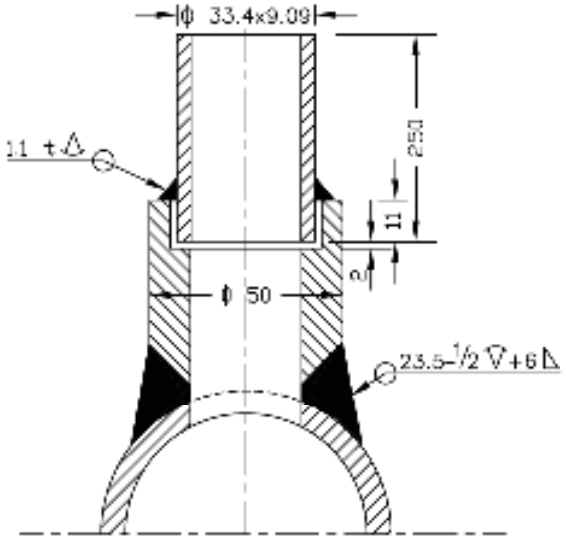

(SYSTEM PR.>40Kg/Sq Cm CL 6000)

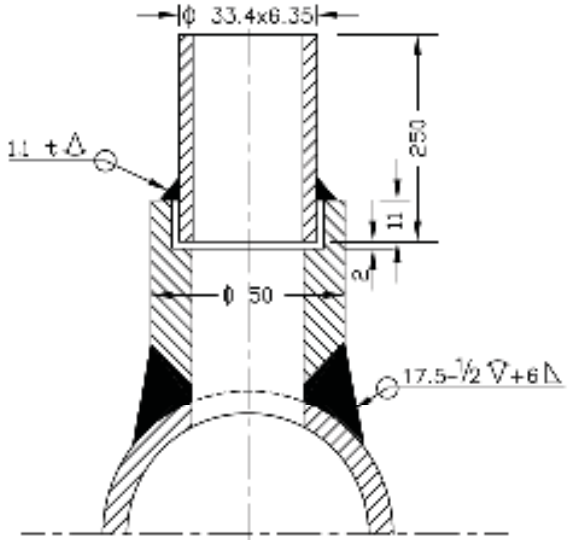

(SYSTEM PR. <40Kg/Sq cm Nb 25 CL 3000)

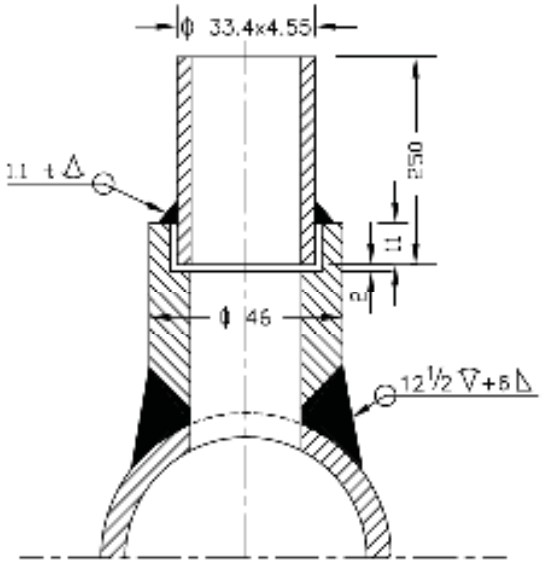

(SYSTEM PR. <40Kg/Sq cm Nb 15 CL 3000)

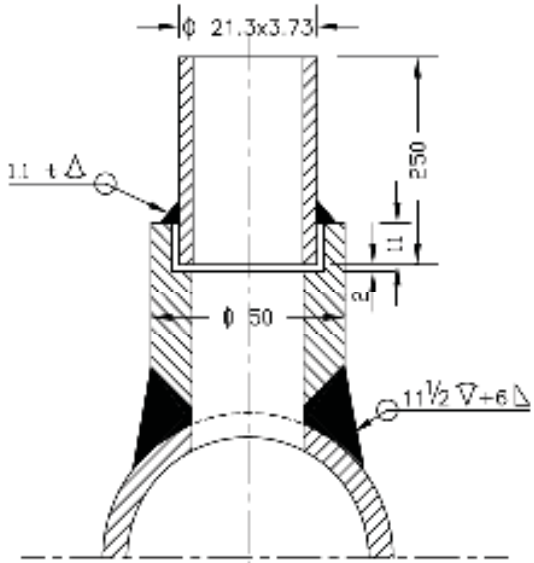

NOTES:–

1. MATERIAL OF THE BOSS AND NIPPLE SHALL BE THE SAME AS THE PIPE INTO WHICH IT IS WELDED AND CONFIRM TO ANSI B 16.11.
2. THE LENGTH OF THE NIPPLE SHOULD BE 250mm.
3. THE OTHER END OF THE NIPPLE SHALL BE SOCKET WELDED WITH 1" GLOBE VALVE OF MATERIAL AS PER ANSI B 16.1.
4. TWO ISOLATED VALVES ARE TO BE USED FOR PRESSURE = >40 Kg/Cm2.
5. EDGE HOLE MUST BE CLEAN AND SQUARE OR ROUNDED SLIGHTLY (1/64" RADIUS) FREE FROM BURRS, WIRE EDGES OR OTHER IRREGULARITIES.
6. ORIENTATION OF TAP WILL BE VARY WITH TYPE OF PROCESS FLUID AND NATURE OF RUN OF THE PIPE.
7. ACTIVITIES TO BE COMPLETED AT THE SHOP, WELD THE COUPLING (OR BOSS) ON THE PIPE AND DRILL PRESSURE CONNECTION HOLE (SAME AS I D OF NIPPLE) IN THE PIPE IN ALLIGNMENT WITH HOLE IN THE COUPLING.
8. ALL DIMENSIONS ARE IN mm UNLESS OTHERWISE STATED.

FOR TENDER PURPOSE ONLY

NTPC — N T P C LIMITED (A GOVERNMENT OF INDIA ENTERPRISE) ENGINEERING DIVISION

REV. NO.	DESCRIPTION	DRAWN	DESIGN	CHKD.	U	E	D	CKD	ASSL	APPD.	DATE
A	FIRST ISSUE							T.G.			

CLEARED BY

PROJECT: TYPICALTHERMAL POWER PROJECT

TITLE: INSTRUMENT SOURCE CONNECTION DETAILS

SIZE	SCALE	DRG. NO.	REV. NO.
A4	N.T.S.	0000-999-POI-A-035	A

This document is the property of NATIONAL THERMAL POWER CORPORATION LTD.
No part of this document will be reproduced by any means without the written permission.

LEVEL MEASUREMENT

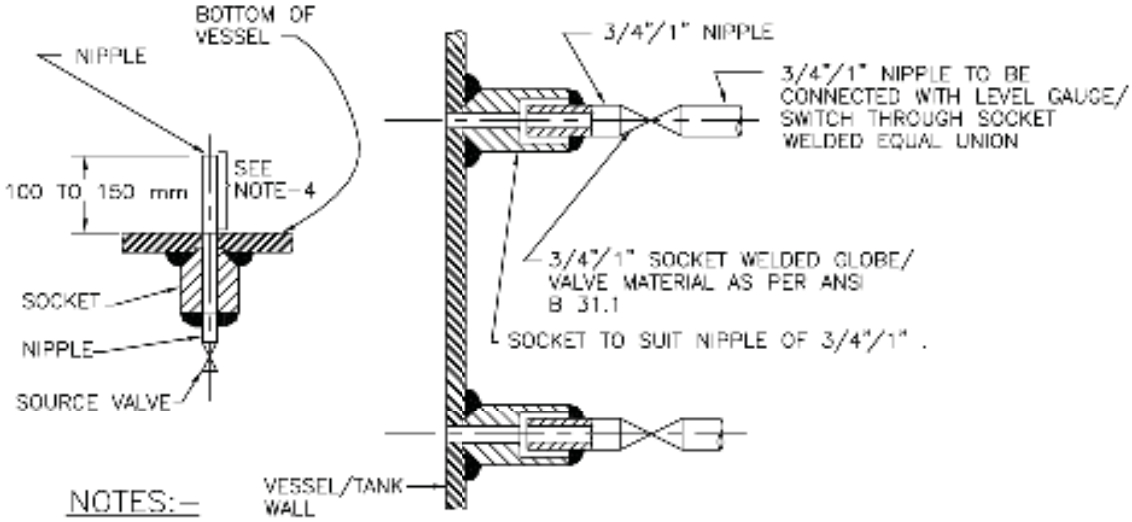

NOTES:-

1. THIS TYPE OF PROCESS CONNECTION SHALL BE USED FOR LEVEL GAUGE AND EXTERNAL CAGE TYPE FLOAT OR DISPLACER OPERATED LEVEL SWITCH.
2. FOR GAUGES 3/4" NIPPLE ALONG WITH 3/4" SW SOURCE VALVE AND FOR SWITCHES 1" NIPPLE ALONG WITH 1" SW SOURCE VALVE SHALL BE PROVIDED AS PROCESS CONNECTION.
3. SOURCE CONNECTION ON VESSEL SHOULD NOT BE LOCATED AT PLACES SUBJECTED TO INTERFACE AND TURBULENCE FROM INLETS AND OUTLETS.
4. IF LOWER CONNECTION IS TAKEN FROM BOTTOM OF THE VESSEL THEN THE NIPPLE MUST BE 100 mm TO 150 mm ABOVE THE BOTTOM OF THE VESSEL.

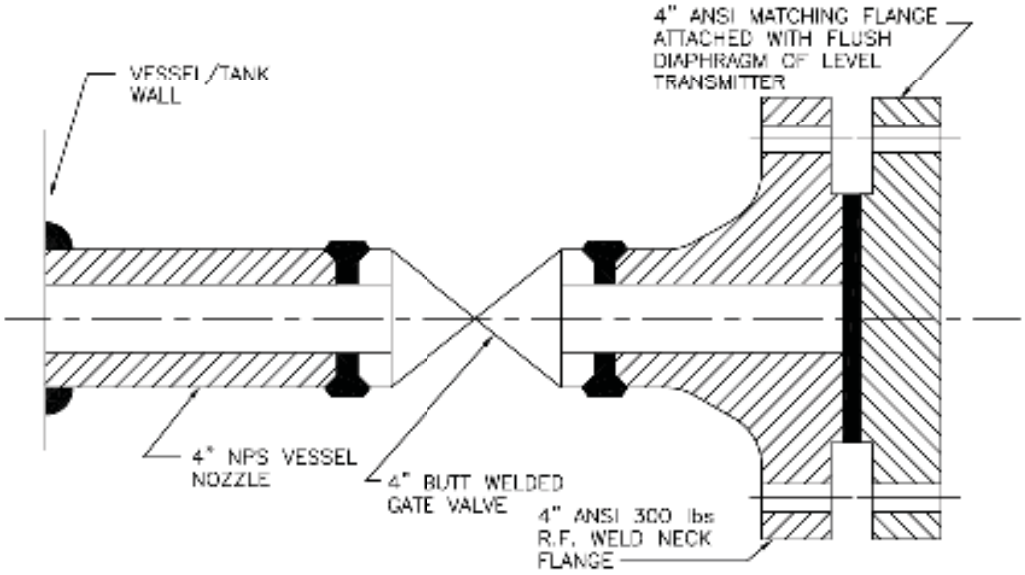

NOTES:

1. THIS TYPE OF PROCESS CONNECTION SHALL BE PROVIDED FOR TANK LEVEL MEASUREMENT OF VISCOUS OR CORROSIVE LIQUID USING FLUSH DIAPHRAGM/WAFER TYPE LEVEL TRANSMITTER.
2. WELDING OF MATCHING FLANGE TO GATE VALVE SHALL BE DONE BY BIDDER.

FOR TENDER PURPOSE ONLY

NTPC — NTPC LIMITED (A GOVERNMENT OF INDIA ENTERPRISE) ENGINEERING DIVISION

PROJECT: TYPICALTHERMAL POWER PROJECT

TITLE: INSTRUMENT SOURCE CONNECTION DETAILS

REV. NO.	DESCRIPTION	DRAWN	DESIGN	CHKD.	M	E	C	CM	ANCL	APPD.	DATE
A	FIRST ISSUE							T.G.			

CLEARED BY 351\562

SIZE	SCALE	DRG. NO.	REV. NO.
A4	N.T.S.	0000-999-POI-A-035	A

This document is the property of NATIONAL THERMAL POWER CORPORATION LTD.
No part of this document will be reproduced by any means without the written permission.

LEVEL MEASUREMENT

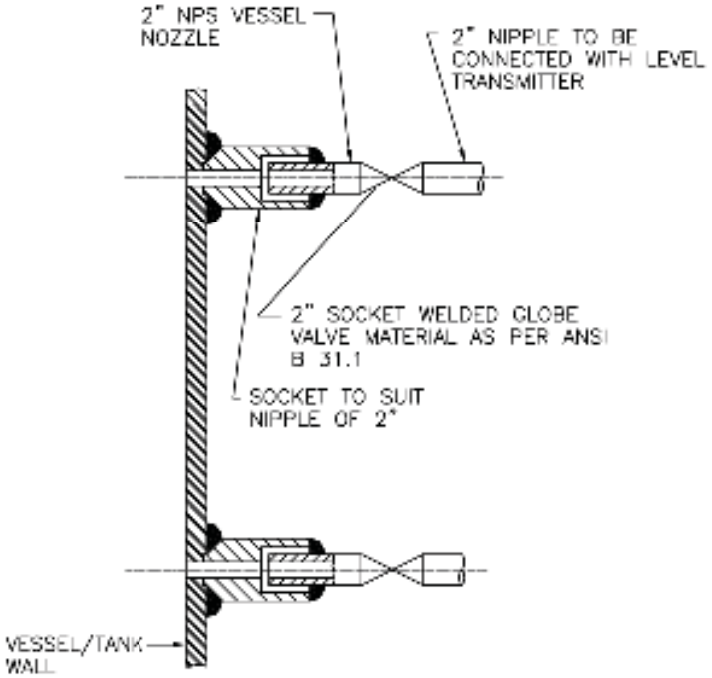

NOTES:–

1. THIS TYPE OF PROCESS CONNECTION SHALL BE USED FOR DISPLACER TYPE LEVEL TRANSMITTER.
2. SOURCE CONNECTION ON VESSEL SHOULD NOT BE LOCATED AT PLACES SUBJECTED TO INTERFACE AND TURBULENCE FROM INLETS AND OUTLETS.
3. IF LOWER CONNECTION IS TAKEN FROM BOTTOM OF THE VESSEL THEN THE NIPPLE MUST BE 100 mm TO 150 mm ABOVE THE BOTTOM OF THE VESSEL.

FOR TENDER PURPOSE ONLY

This document is the property of NATIONAL THERMAL POWER CORPORATION LTD.
No part of this document will be reproduced by any means without the written permission.

NTPC — N T P C LIMITED (A GOVERNMENT OF INDIA ENTERPRISE) ENGINEERING DIVISION

PROJECT: TYPICALTHERMAL POWER PROJECT

TITLE: INSTRUMENT SOURCE CONNECTION DETAILS

REV. NO.	DESCRIPTION	DRAWN	DESIGN	CHKD.	U	E	C	T.G. CM	ASSL	APPD.	DATE
A	FIRST ISSUE										

CLEARED BY

SIZE	SCALE	DRG. NO.	REV. NO.
A4	N.T.S.	0000-999-POI-A-035	A

	C&I SPECIFICATION FOR LIME DOSING SYSTEM	SECTION: C SUB SECTION: C&I

INSTRUMENT INSTALLATION DRAWING

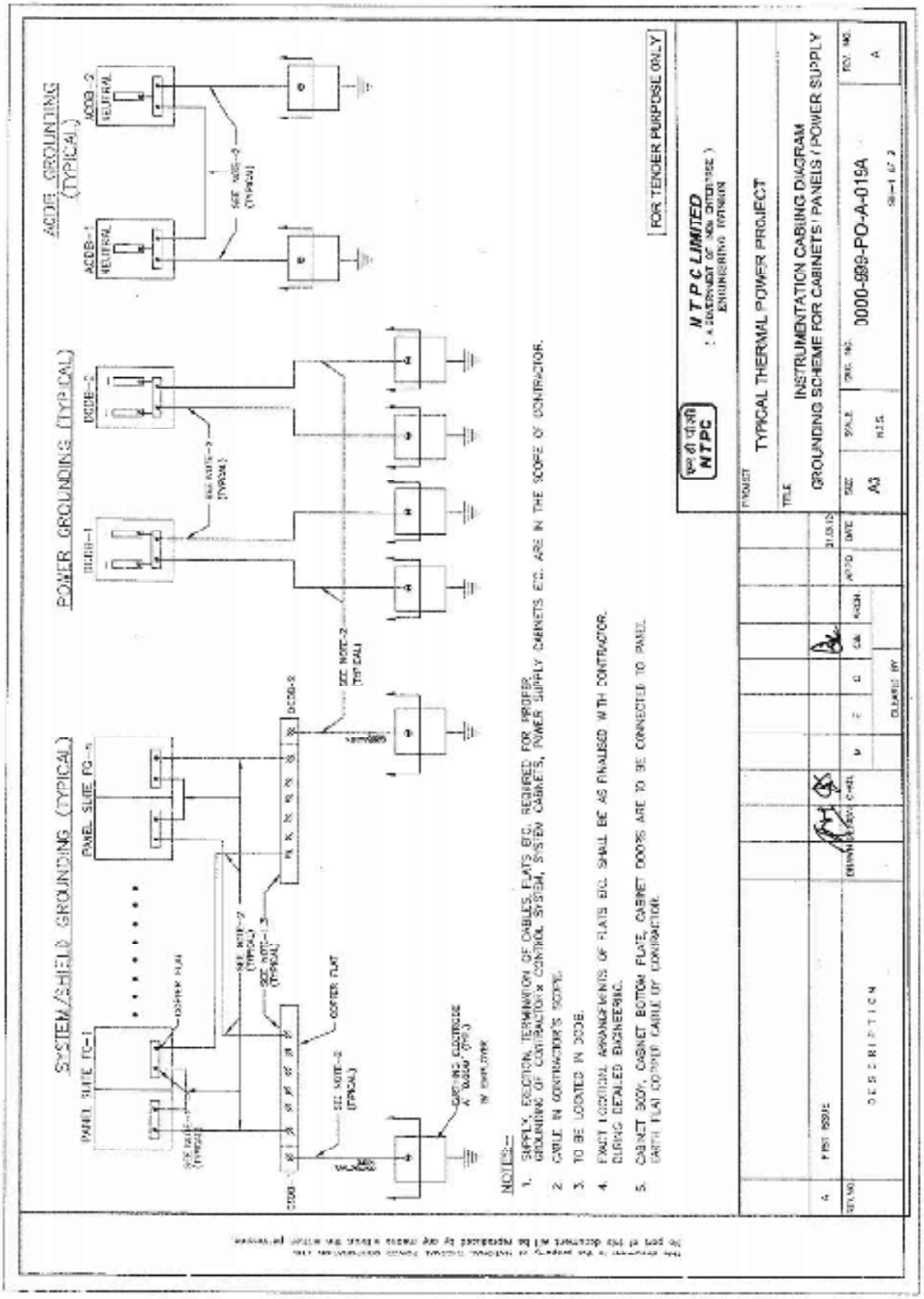
ACDB GROUNDING (TYPICAL)
ACDB-1
NEUTRAL
ACDB-2
NEUTRAL
POWER GROUNDING (TYPICAL)
DCDB-1
DCDB-2
SYSTEM/SHIELD GROUNDING (TYPICAL)
PANEL SLIDE FC-1
PANEL SLIDE FC-n
DCDB-2
COPPER FLAT
GROUNDING ELECTRODE
NOTES:-
1. SUPPLY, ERECTION, TERMINATION OF CABLES, FLATS ETC. REQUIRED FOR PROPER GROUNDING OF CONTRACTOR'S CONTROL SYSTEM, SYSTEM CABINETS, POWER SUPPLY CABINETS ETC. ARE IN THE SCOPE OF CONTRACTOR.
2. CABLE IN CONTRACTOR'S SCOPE.
3. TO BE LOCATED IN DCDB.
4. EXACT LOCATION, ARRANGEMENTS OF FLATS ETC. SHALL BE AS FINALISED WITH CONTRACTOR DURING DETAILED ENGINEERING.
5. CABINET BODY, CABINET BOTTOM PLATE, CABINET DOORS ARE TO BE CONNECTED TO PANEL EARTH FLAT COPPER CABLE BY CONTRACTOR.
FOR TENDER PURPOSE ONLY
NTPC
N T P C LIMITED
TYPICAL THERMAL POWER PROJECT
INSTRUMENTATION CABLING DIAGRAM
GROUNDING SCHEME FOR CABINETS / PANELS / POWER SUPPLY
0000-999-PO-A-019A
A3
DESCRIPTION

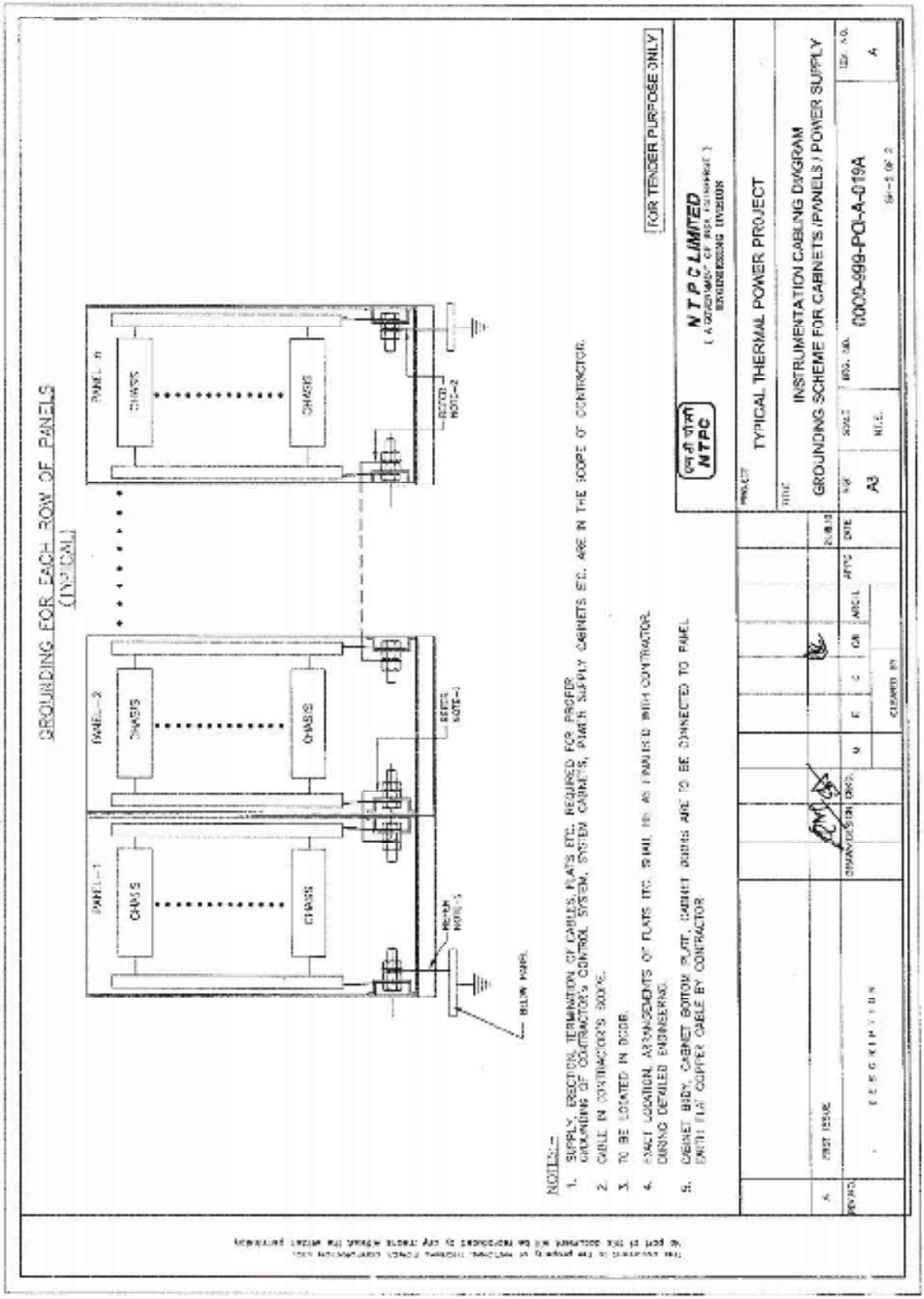
GROUNDING FOR EACH ROW OF PANELS
(TYPICAL)
PANEL-1
PANEL-2
PANEL n
CHASSIS
BELOW PANEL
NOTES:-
1. SUPPLY, ERECTION, TERMINATION OF CABLES, FLATS ETC. REQUIRED FOR PROPER GROUNDING OF CONTRACTOR'S CONTROL SYSTEM, SYSTEM CABINETS, PLANTS SUPPLY CABINETS ETC. ARE IN THE SCOPE OF CONTRACTOR.
2. CABLE IN CONTRACTOR'S SCOPE.
3. TO BE LOCATED IN DCDB.
4. PANEL LOCATION, ARRANGEMENTS OF FLATS ETC. SHALL BE AS FINALISED WITH CONTRACTOR DURING DETAILED ENGINEERING.
5. CABINET BODY, CABINET BOTTOM PLATE, CABINET DOORS ARE TO BE CONNECTED TO PANEL EARTH FLAT COPPER CABLE BY CONTRACTOR
FOR TENDER PURPOSE ONLY
NTPC LIMITED
TYPICAL THERMAL POWER PROJECT
INSTRUMENTATION CABLING DIAGRAM
GROUNDING SCHEME FOR CABINETS /PANELS / POWER SUPPLY
0000-999-PCI-A-019A
A3
FIRST ISSUE

12319/2020/PS-PEM-MAX

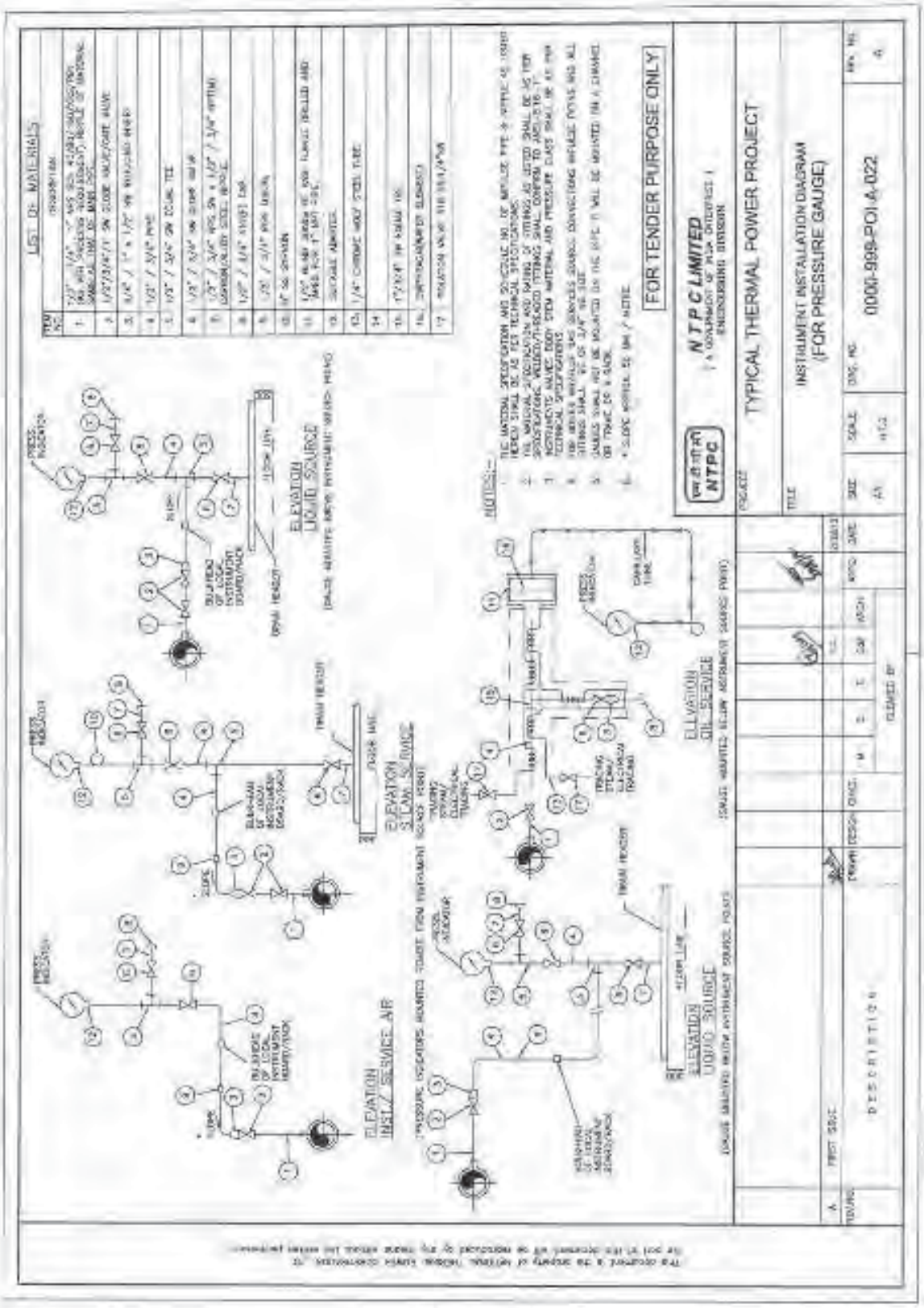

12319/2020/PS-PEM-MAX

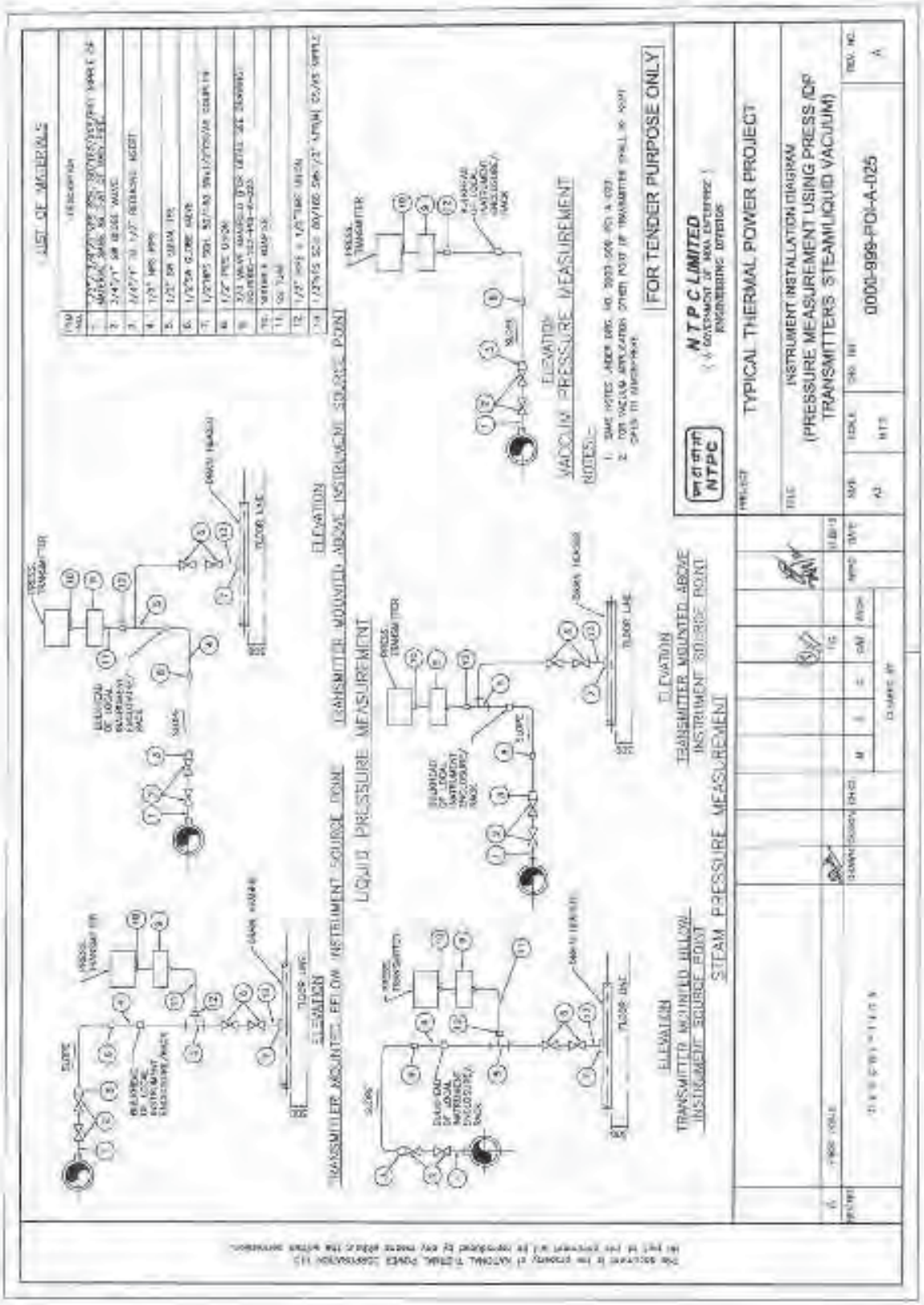

12319/2020/PS-PEM-MAX

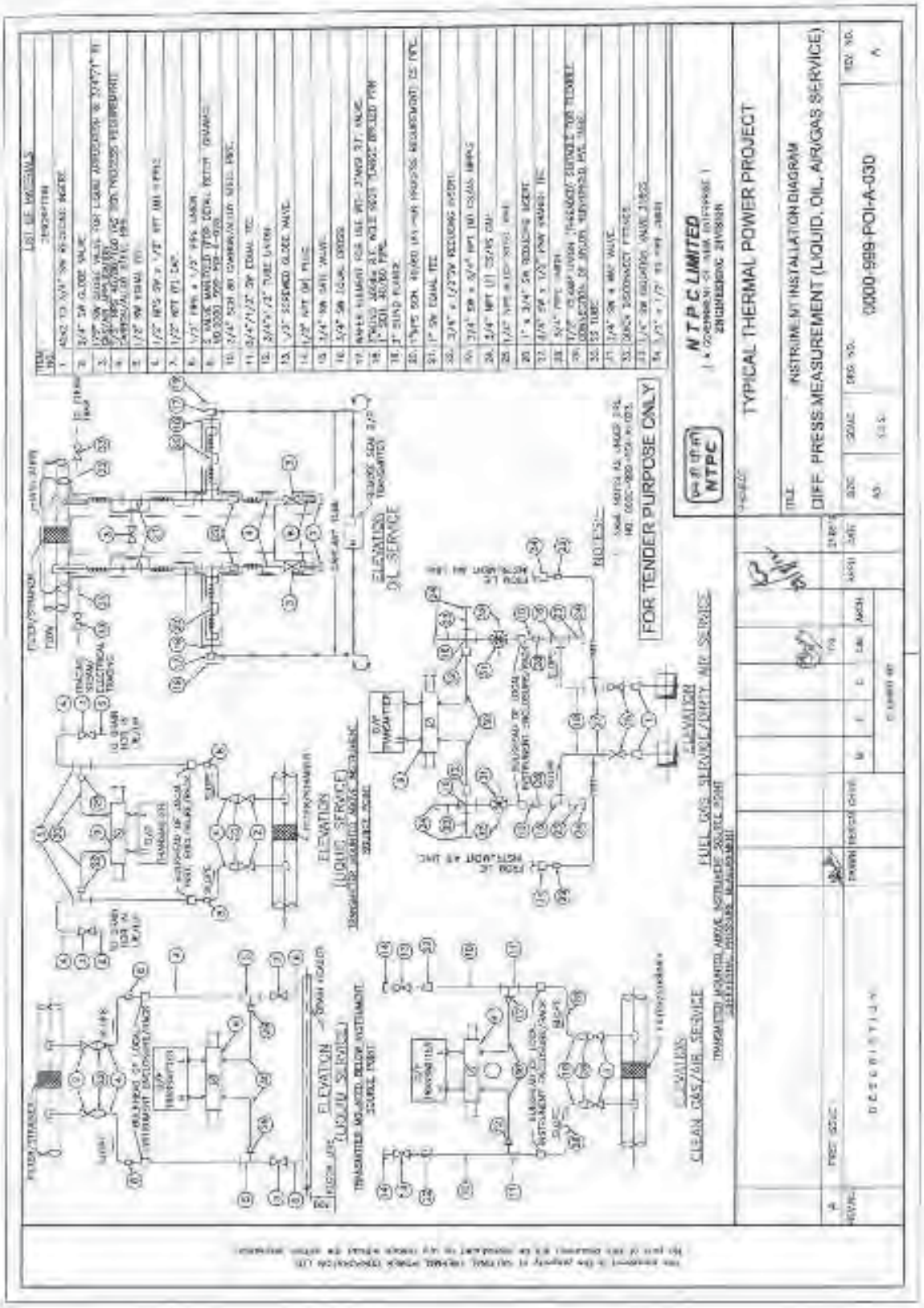

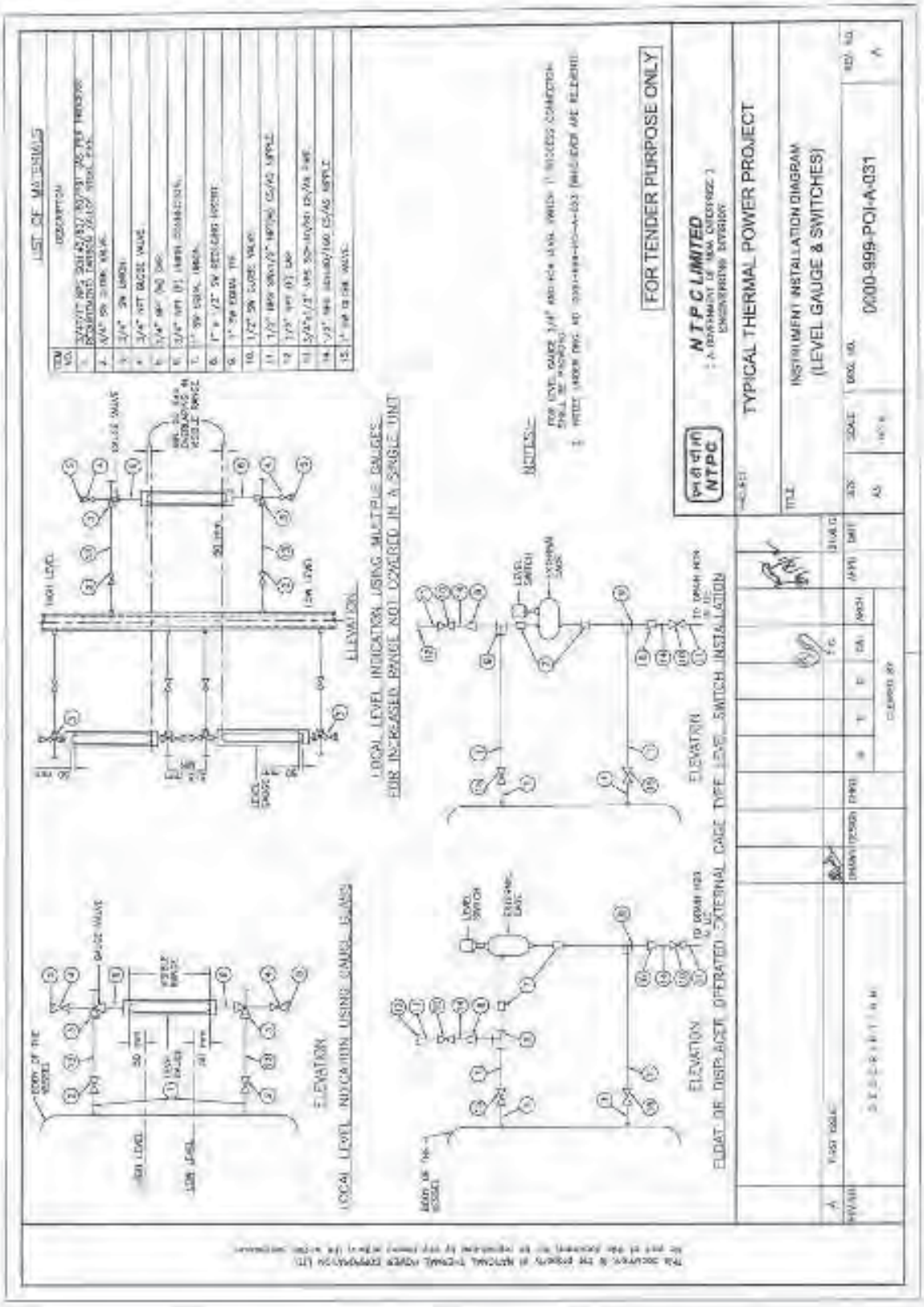
LIST OF MATERIALS
NOTES:-
FOR TENDER PURPOSE ONLY
NTPC LIMITED
TYPICAL THERMAL POWER PROJECT
INSTRUMENT INSTALLATION DIAGRAM
(LEVEL GAUGE & SWITCHES)
0000-999-POI-A-031
LOCAL LEVEL INDICATION USING MULTIPLE GAUGES
FOR INCREASED RANGE NOT CONNECTED IN A SINGLE UNIT
LOCAL LEVEL INDICATION USING GAUGE GLASS
FLOAT OR DISPLACER OPERATED EXTERNAL CAGE TYPE LEVEL SWITCH INSTALLATION
ELEVATION

CLAUSE NO.	TECHNICAL REQUIREMENTS

PROCESS CONNECTION AND PIPING

1.00.00 **PROCESS CONNECTION PIPING**

1.01.00 The Contractor shall provide, install and test all required material for completeness of Impulse Piping System and Air Piping System as per the requirements of this Sub-Section on as required basis for the connection of all instruments and control equipments of entire plant.

1.01.01 **IMPULSE PIPING, TUBING, FITTINGS, VALVES AND VALVE MANIFOLDS**

1.01.02 All impulse pipes shall be of seamless type conforming to ANSI B36.10 for schedule numbers. The size of impulse pipe shall be ½" for Steam & Water Application and ¾" for Air & Flue Gas applications. The rating of material of impulse pipes, tubes, fittings, valves and their installation thereof shall conform to the latest edition of standards as per following table:

Impulse Pipes, Tubes (Material, Rating)	ANSI B31.1, ANSI B31.1a, ANSI/ISA 77.70
Valves (Material, Pr. Class, Size)	ASTM A182/ASTM A105 as per ASME 16.34
Fittings (Size, Rating, Material)	ANSI B31.1, ANSI B31.1a, ASME B16.11-2009
Installation Schemes	BS 6739-2009, ANSI/ISA 77.70

Stainless steel tube shall be provided inside enclosures & racks from tee connection to valve manifold and then to instrument. The source shut-off (primary process root valve) and blow down valve shall be of 1/2 inch size globe valve type for all applications except for air and flue gas service wherein no source shut-off valves are to be provided. Two root valves are to be used wherever pressure is more than 40 Kg/cm^2 or Temp>280 ^{o}C. The end connections of valves shall be of socket welded type. Typical installation scheme of DP Transmitter (inside LIE/LIR) mounted below instrument source point is indicated in Drg. No. 0000-999-POI-A-036. Same scheme with necessary changes shall be applied for other instruments.

1.01.03 The valve manifolds of 316 SS with pressure rating suitable for intended application shall be provided as given below:

Manifold	Application/Measurement
2 Valve	Pressure measurements using pressure transmitters/pressure switches
3 Valve	Pressure measurements using differential pressure transmitter/ switches
5 Valve	Differential Pressure, Flow and Level Measurements

For Pr./D.P gauges, two-way globe/gate valve shall be provided on each impulse line to the instrument in Fluid/Air & Flue Gas applications respectively .

2.00.00 **AIR SUPPLY PIPING**

2.01.01 All pneumatic piping, fittings, valves, air filter cum regulator, purge rotameter and other accessories required for instrument air for the various pneumatic devices/ instruments shall be provided. This will include as a minimum air supply to pneumatically operated control valves, actuators, instruments, continuous and intermittent purging requirements etc.

2.02.00 Instrument air and Service air supply shall be provided for continuous and intermittent purging respectively for all transmitters of mill, dirty air and flue gas applications. Purging Scheme shall be as per Drg. No. 0000-999-POI-A-036.

2.03.00 The Contractor shall also provide SS Tubing and associated fittings (screwed type) of suitable sizes for all pneumatic equipments/actuators (including supply air, signal air and output to actuators) conforming to ANSI 31.1 and 31.3 standard. All other air supply lines shall be of mild steel hot dipped galvanized inside and outside as per IS-1239, heavy duty

CLAUSE NO.	TECHNICAL REQUIREMENTS
	with threaded ends. Fittings for air supply line shall be of forged carbon steel A234 Gr. WPB galvanized inside and outside, screwed as per ASA B2.1. Dimensions of fittings shall be as per ASA B16.11 of rating 3000 lbs. Air supply piping shall be adequately sloped to prevent accumulation of condensed water within the pipe. The air supply headers, sub-headers and branch pipes shall be supported properly by clamps or supports.
2.04.00	The instrument/service air supply to each equipment/devices requiring air supply shall be provided by a well designed air distribution scheme comprising of 2" GI Pipe Header feeding 1" GI Pipe sub-header feeding ½" pipe at each equipment/device. Instrument air filters cum regulator set with mounting accessories shall be provided for each pneumatic device requiring air supply except for Ash Handling System wherein it shall be provided on instrument air header at each location.
2.05.00	All the isolation valves in the air supply line shall be gate valves as per ASTM B62 inside screw rising stem, screwed female ends as per ASA B2.1. Valve bonnet shall be union type & trim material shall be stainless steel, body rating 150 pounds ASA. The valve sizes shall be ½ inch to 2 inch.
2.06.00	Instrument air filters cum regulator set with mounting accessories shall be provided for pneumatic device requiring air supply. The filter regulators shall be suitable for 10-kg/ sq.cm max. Inlet pressure. The filter shall be of size 5 microns and of material sintered bronze. The air set shall have 2-inch size pressure gauge and built in filter housing blowdown valve. The end connection shall be as per the requirement to be finalized during detailed engineering.
3.00.00	**INSTALLATION AND ROUTING**
3.01.01	All instrument piping, tubing and its accessories shall be supported in a safe manner to prevent excessive vibrations and anchored sufficiently to prevent undue strain on connected equipment. Impulse piping shall be supported at an interval not exceeding 1.5 meters. The slope of the impulse pipe form the process connection to the instrument shall be as per ANSI/ISA 77.70 latest edition and BS 6739-2009. All impulse piping shall be installed to permit free movement due to thermal expansion. Wherever required expansion loops shall be provided. Condensate pots shall be provided for all level measurements in steam and water services, all flow measurement in steam services and for flow measurements in water services above 120 Deg. C. Colour coding of all impulse pipes shall be done by the Contractor in line with the colour coding being followed for the parent pipes.
4.00.00	**SHOP AND SITE TESTS**
4.01.01	The equipment and work performed as per this Sub-section shall be subject to shop and site test as per requirements of Sub-section-IIIE-04 (Quality Assurance & Inspection) other applicable clauses of this Sub-section and Employer approved quality assurance plan.
4.01.02	Hydrostatic and Pneumatic leakage tests shall be performed on all pipes, tubing and systems and shall conform to ANSI B31.1.
5.00.00	**LOCAL INSTRUMENT ENCLOSURE AND RACKS** All transmitters, switches etc. for FGD system and other system being provided under the contract shall be suitably grouped together and mounted inside (i) local instruments enclosures in case of open areas of the plant and (ii) In local instrument racks in case of covered areas. The GA of LIE with purging indicated in the Drg. No. 0000-999-POI-A-036 is to be followed by contractor. The GA of LIR shall be similar to LIE except for front/rear doors and side panels.

CLAUSE NO.	TECHNICAL REQUIREMENTS
	The internal layout shall be such that the impulse piping/ blow down lines are accessible from back side of the enclosure / rack and the transmitters etc. are accessible from front side for easy maintenance. Bulkheads, especially designed to provide isolation from process line vibration shall be installed on instrument enclosures/racks to meet the process sensing line connection requirement. Vibration dampeners shall be installed for each enclosure / rack. The Degree of Protection of LIE and JB of LIE/LIR shall be IP-55. The enclosures shall be constructed of 3 mm sheet plate and shall be of modular construction with one or more modules and two end assemblies bolted together to form an enclosure. Double inter locking doors shall be provided. The doors shall be the three-point locking type constructed of not less than 1.6 mm thick steel. Doors shall have concealed quick removal type pinned hinges and locking handles. Door locks shall accept the same key. The instrument racks shall be free standing type constructed of suitable 5 mm thick channel frame of steel and shall be provided with a canopy to protect the equipment mounted in racks from falling objects, water etc. The canopy shall not be less than 3 mm thick steel, and extended beyond the ends of the rack. Enclosures/Racks shall be reinforced as required to ensure true surface and to provide adequate support for instruments and equipment mounted therein. Centre posts or any member which would reduce access shall not be provided. Contractor shall provide not more than three variants for LIE/LIR with respect to max. no. transmitters mounted in each LIE/LIR.
5.01.00	ENCLOSURE / RACKS FOR DUAL I/P TEMPERATURE TRANSMITTERS
	All Dual Input temperature transmitters for FGD system and other system being provided under the contract shall be suitably grouped together and mounted inside (i) Enclosures in case of open areas of the plant and (ii) Racks in case of covered areas. Integral JB shall be provided with each Enclosure and Rack. The internal layout shall be such that the transmitters are accessible from both front and back side of the enclosure / rack for easy maintenance. Enclosure/ Racks shall be of robust and rugged design. Vibration dampeners shall be installed for each enclosure / rack. The Degree of Protection of Enclosure and JB shall be IP-55. Enclosure and Racks shall be free standing type. Enclosures/Racks shall be reinforced as required to ensure true surface and to provide adequate support for instruments and equipment mounted therein. Contractor shall provide not more than five variants for Enclosure/ Rack with respect to max. no. transmitters mounted in each Enclosure/ Rack. However, the maximum number of Transmitters that can be grouped in one Enclosure/ Rack shall be decided during detail Engineering.

CLAUSE NO.	TECHNICAL REQUIREMENTS
6.00.00	**INSTALLATION OF OTHER INSTRUMENTS:** For installation and routing of other field mounted instruments which are not covered in Cl. No. 5.00.00, please refer Cl. No 52.04.00(J) of Section-VI, Part-D, Erection Conditions of Contract (ECC) of Technical Specifications.

SIGNAL INTERFACE BETWEEN DRIVES AND DCS

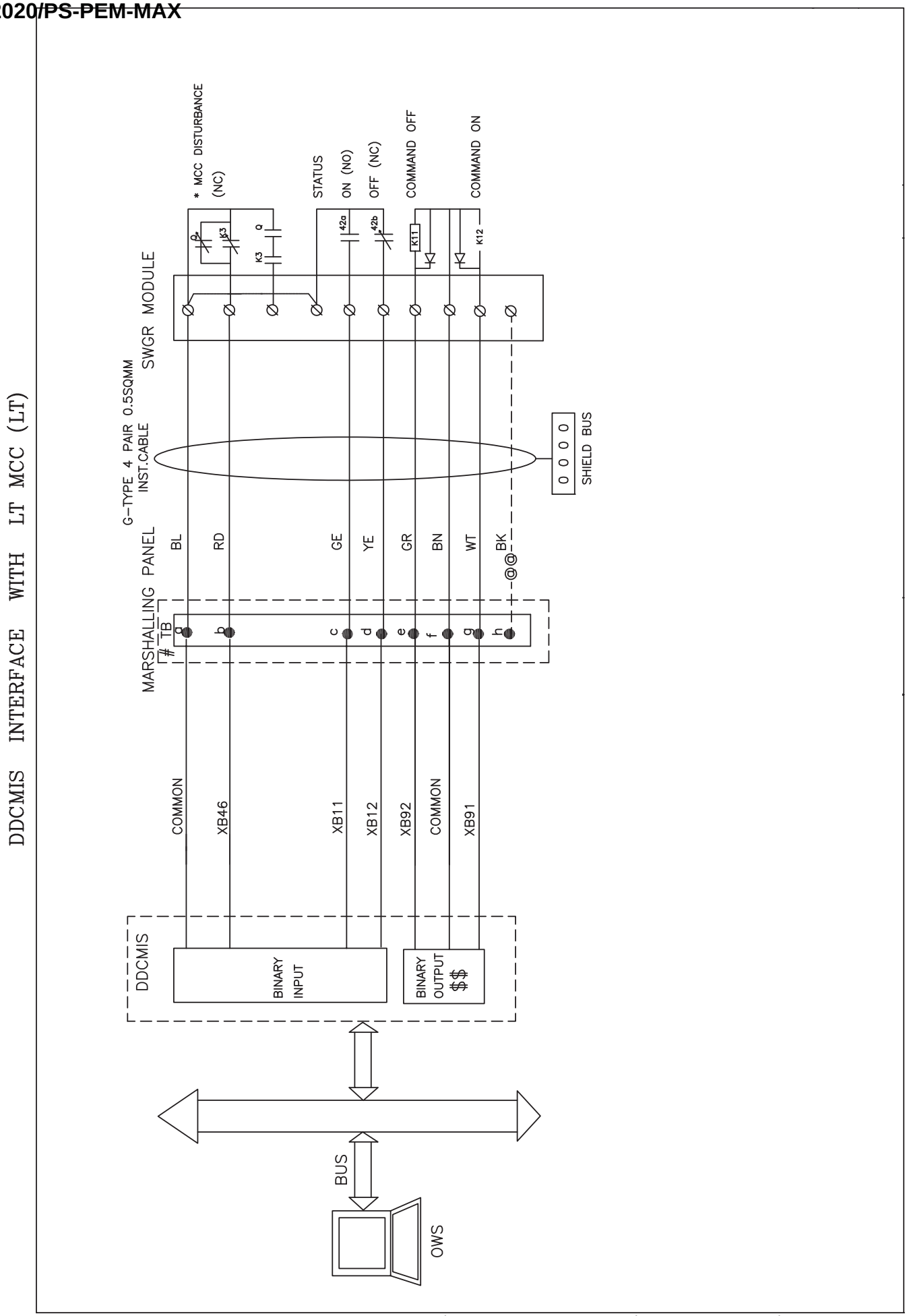
DDCMIS INTERFACE WITH LT MCC (LT)
* MCC DISTURBANCE
(NC)
STATUS
ON (NO)
OFF (NC)
COMMAND OFF
COMMAND ON
K3
K3
Q
42a
42b
K11
K12
SWGR MODULE
G-TYPE 4 PAIR 0.5SQMM
INST.CABLE
SHIELD BUS
MARSHALLING PANEL
TB
BL
RD
GE
YE
GR
BN
WT
BK
@@
COMMON
XB46
XB11
XB12
XB92
COMMON
XB91
DDCMIS
BINARY
INPUT
BINARY
OUTPUT
$$
BUS
OWS

12319/2020/PS-PEM-MAX

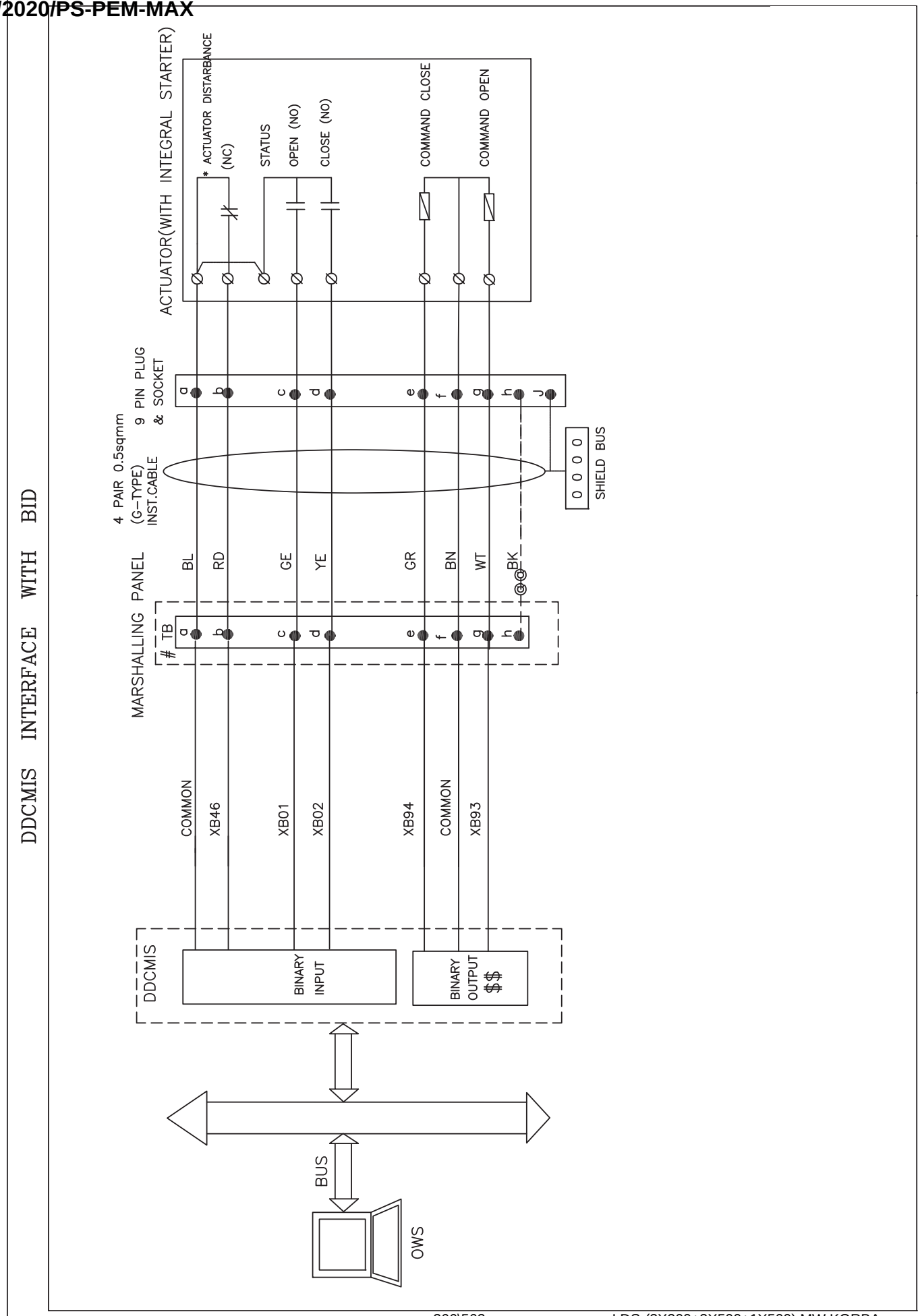

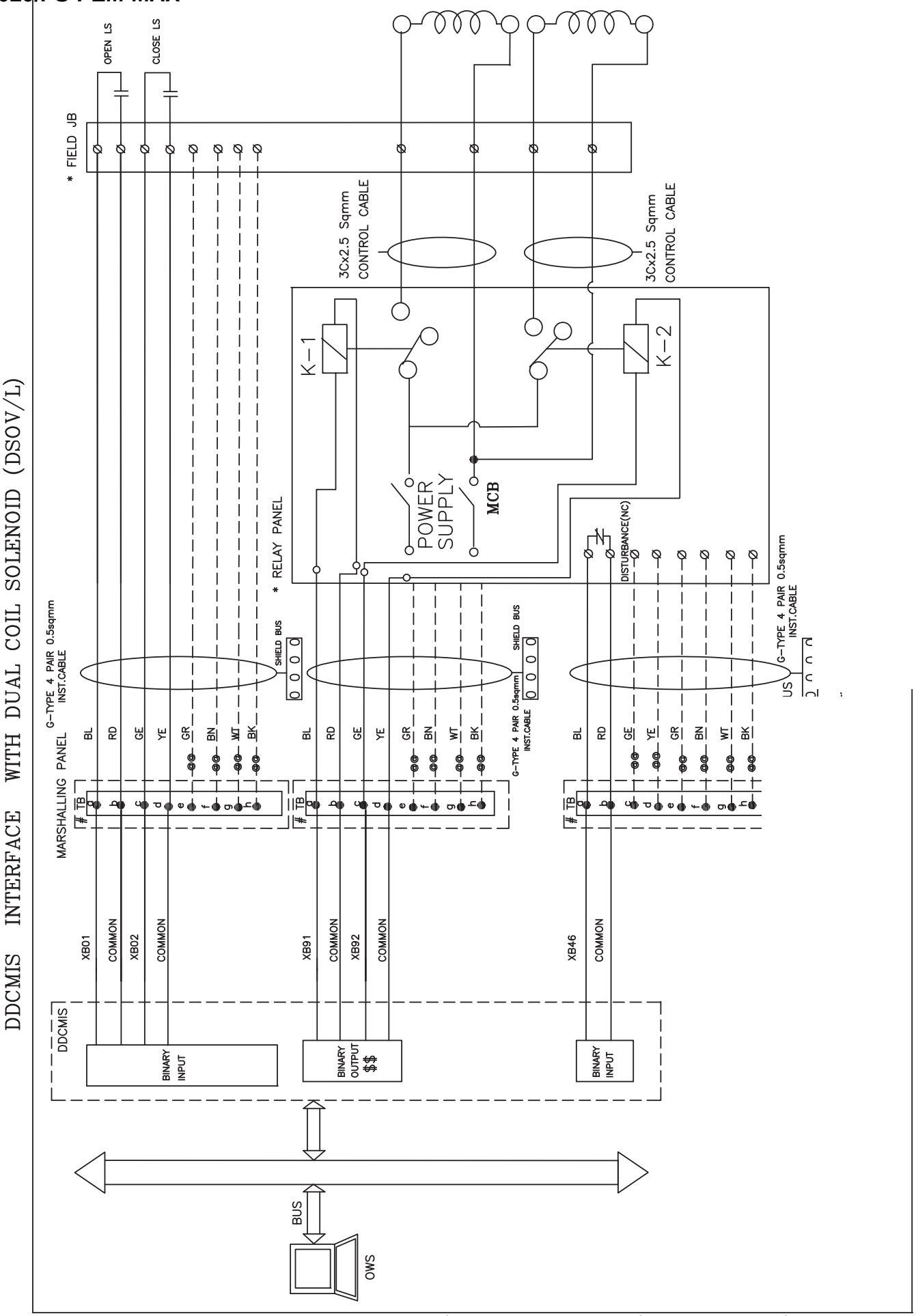
DDCMIS INTERFACE WITH DUAL COIL SOLENOID (DSOV/L)
OPEN LS
CLOSE LS
* FIELD JB
3Cx2.5 Sqmm CONTROL CABLE
3Cx2.5 Sqmm CONTROL CABLE
K-1
K-2
POWER SUPPLY
MCB
* RELAY PANEL
DISTURBANCE(NC)
G-TYPE 4 PAIR 0.5sqmm INST.CABLE
SHIELD BUS
MARSHALLING PANEL
BL RD GE YE GR BN WT BK
XB01 COMMON XB02 COMMON
XB91 COMMON XB92 COMMON
XB46 COMMON
DDCMIS
BINARY INPUT
BINARY OUTPUT
BINARY INPUT
BUS
OWS

12319/2020/PS-PEM-MAX

INTERFACE FOR MODULATING DRIVES – CLCS

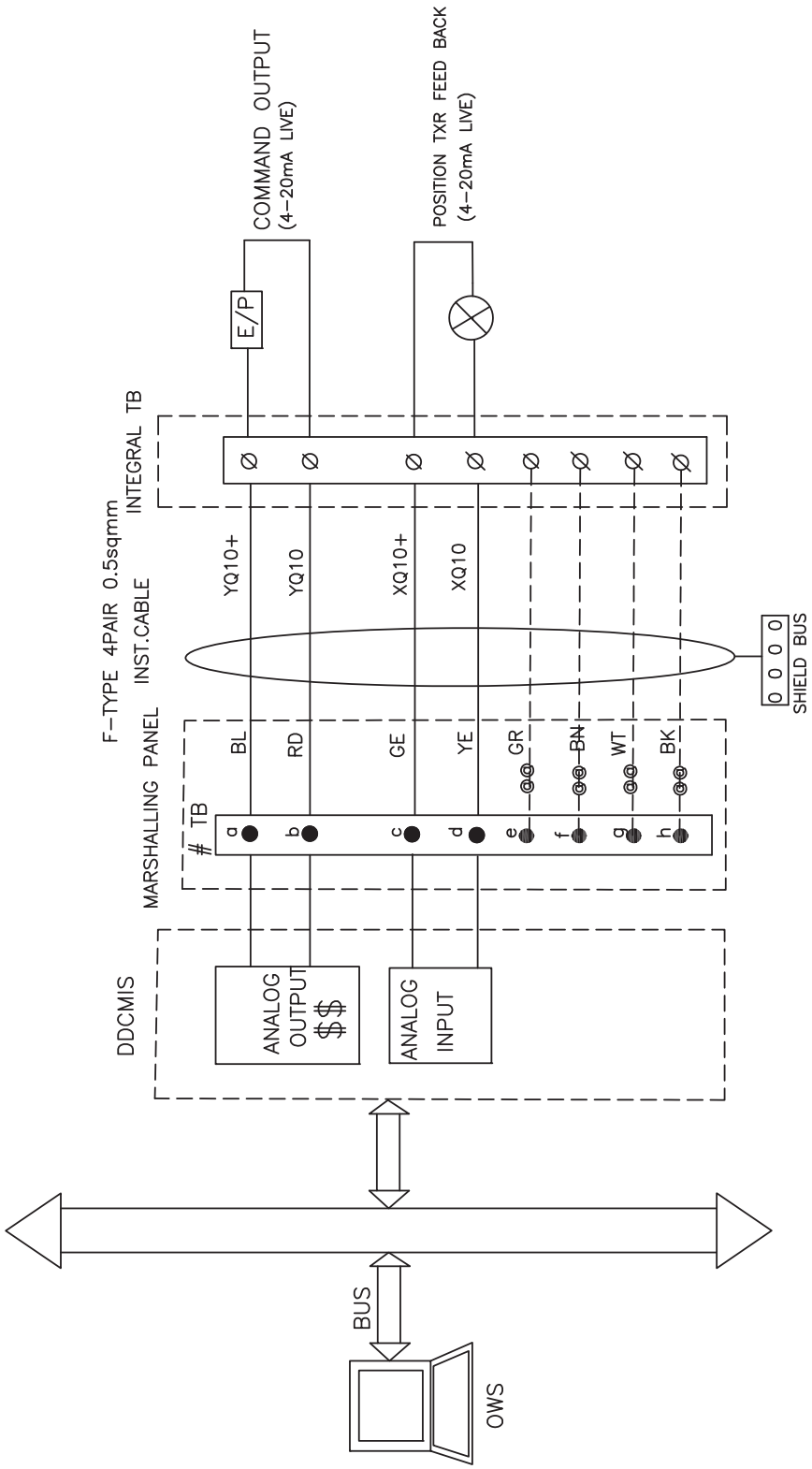

12319/2020/PS-PEM-MAX

INTERFACE FOR MODULATING DRIVES – CLCS–M

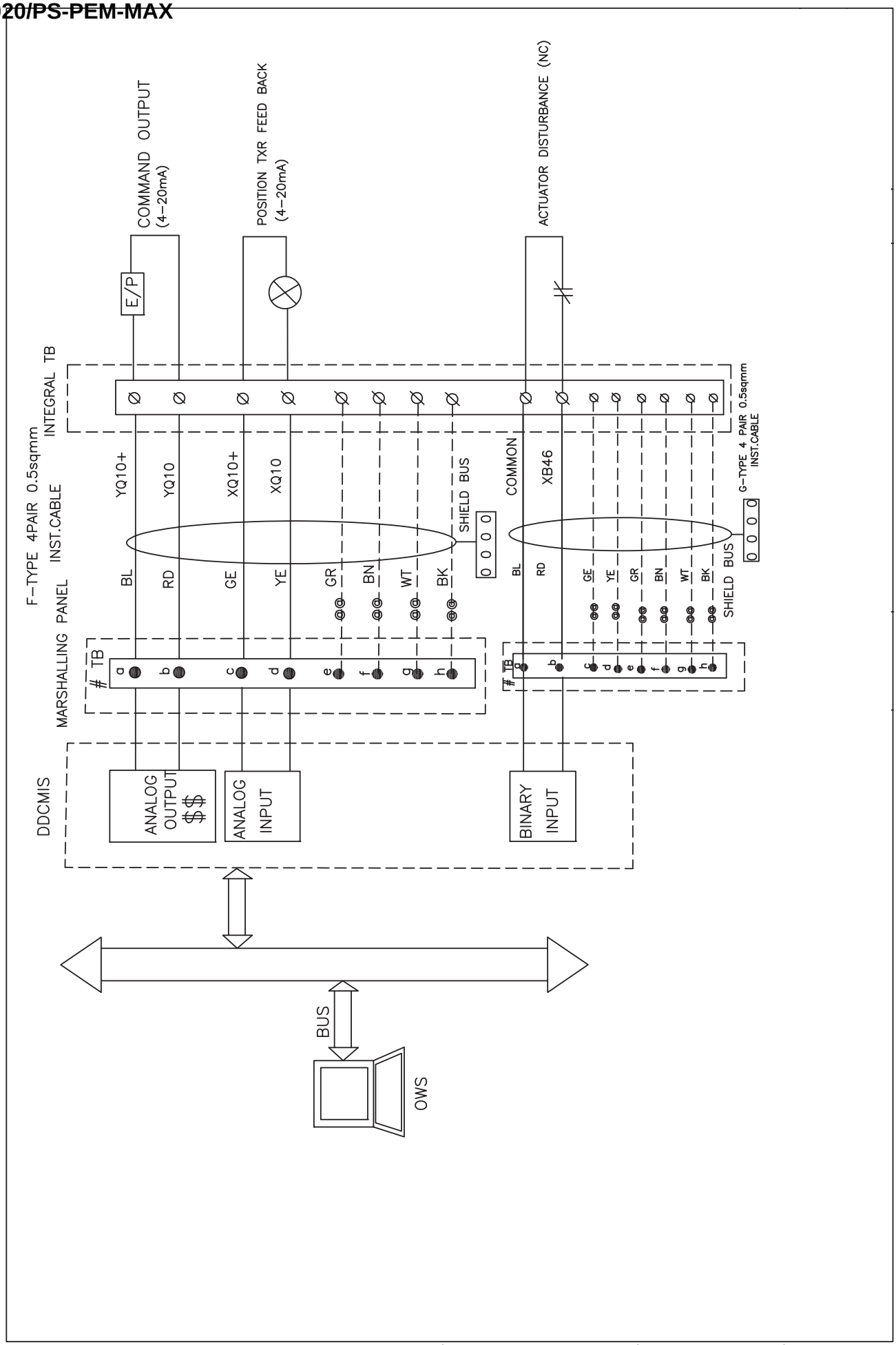

DRIVE & INSTRUMENT INTERFACE DIAGRAM

12319/2020/PS-PEM-MAX

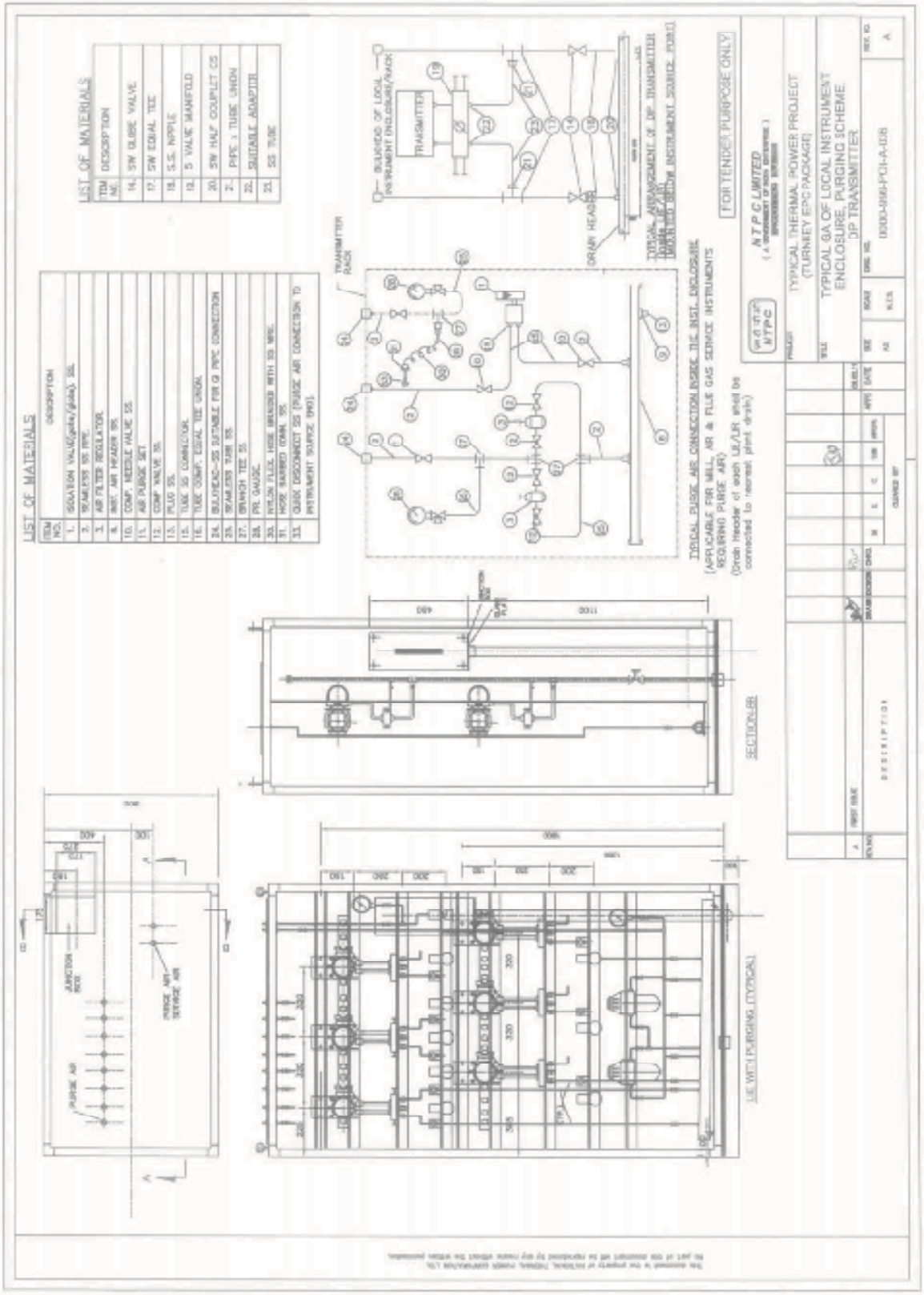

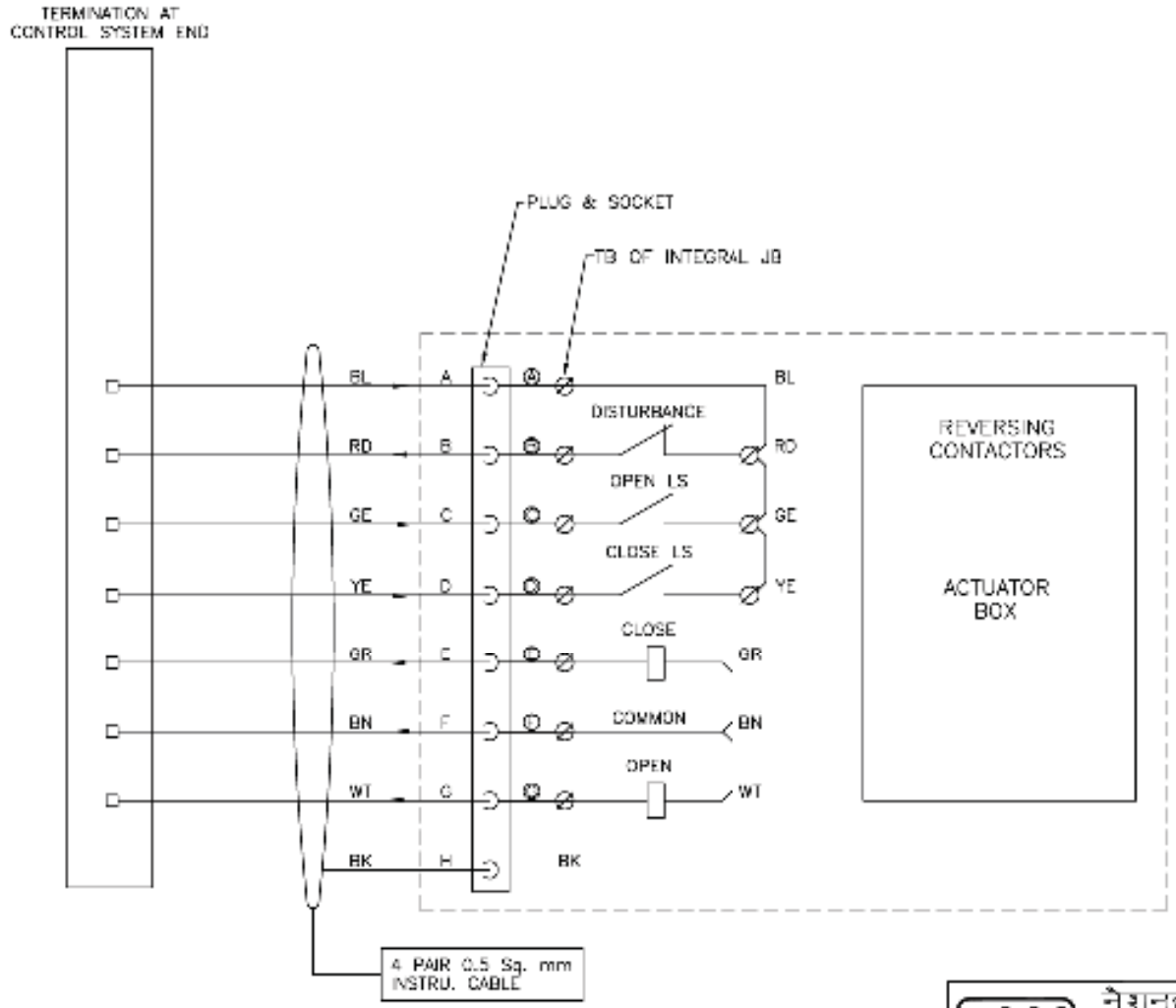

FOR TENDER PURPOSE ONLY

एनटीपीसी NTPC
नेशनल थर्मल पावर कारपोरेशन लिमिटेड
National Thermal Power Corporation Ltd.
(A GOVERNMENT OF INDIA ENTERPRISE)
ENGINEERING DIVISION

PROJECT: TYPICAL THERMAL POWER PROJECT

TITLE: INTERFACING OF ACTUATORS

REV.NO.	DESCRIPTION	DRAWN	DESIGN	CHKD.	M	E	C	C&I	ARCH.	APPD	DATE
D	FIRST ISSUE										21.06.12

CLEARED BY

SIZE	SCALE	DRG. NO.	REV. NO.
A3	N.T.S.	0000-999-POI-A-063	D

This document is the property of NATIONAL THERMAL POWER CORPORATION LTD.
No part of this document will be reproduced by any means without the written permission.

37215682

LDS-(3X200+3X500+1X500) MW KORBA

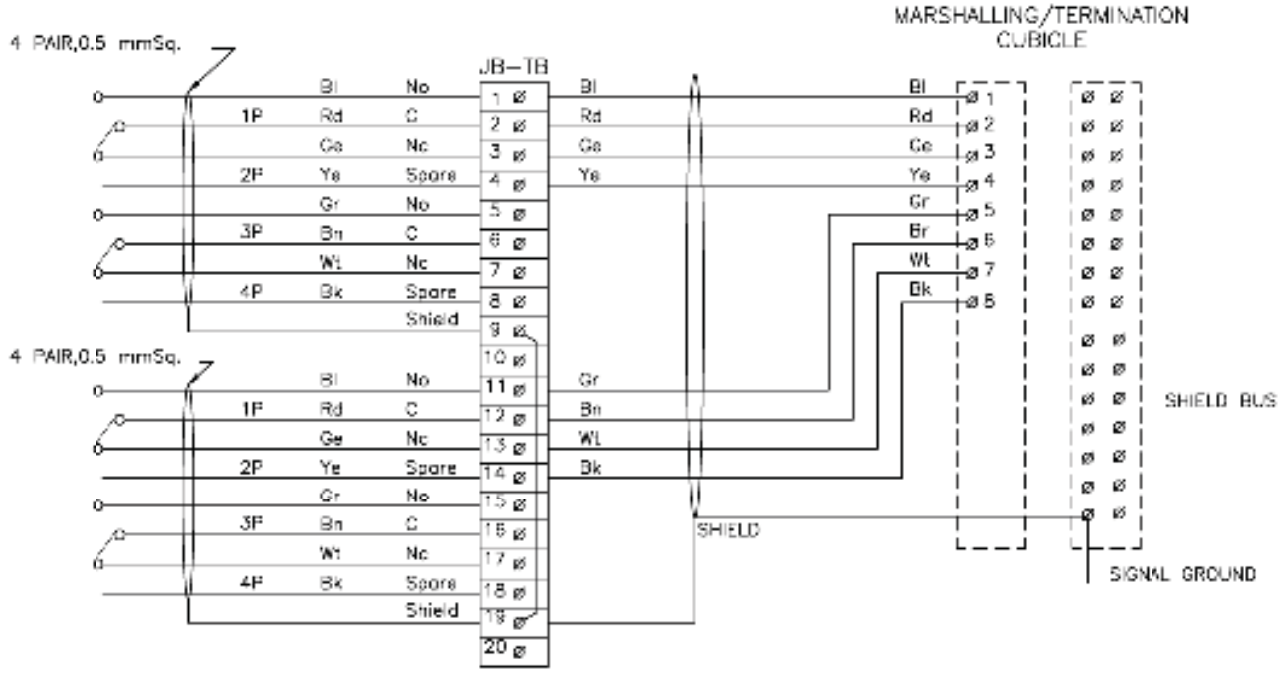

FOR TENDER PURPOSE ONLY

एन टी पी सी NTPC

N T P C LIMITED
(A GOVERNMENT OF INDIA ENTERPRISE)
ENGINEERING DIVISION

PROJECT: TYPICAL THERMAL POWER PROJECT

TITLE: INTERFACING OF FIELD INSTRUMENTS/ SWGR SWITCH (COC) TERMINATION DETAILS

REV.NO.	DESCRIPTION	DRAWN	DESIGN	CHKD.	M	E	C	C&I	ARCH.	APPD	DATE
A	FIRST ISSUE										21.08.12

CLEARED BY

SIZE	SCALE	DRG. NO.	REV. NO.
A3	NTS	0000-999-POI-A-065 SH 01 OF 15	A

This document is the property of NATIONAL POWER CORPORATION LTD. No part of this document will be reproduced by any means without the written permission.

LDS-(3X200+3X500+1X500) MW KORBA

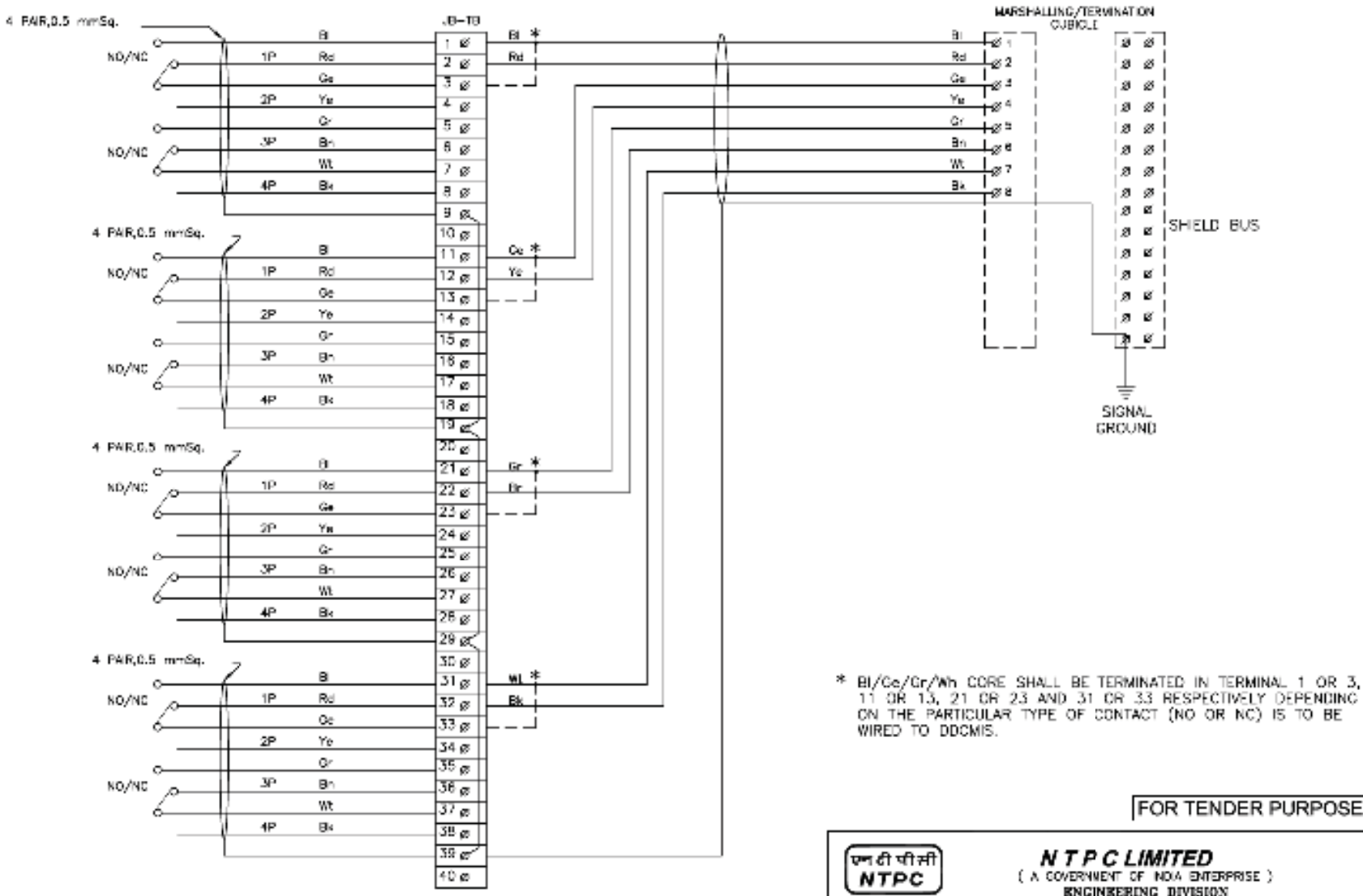

FOR TENDER PURPOSE ONLY

एन टी पी सी NTPC

N T P C LIMITED
(A GOVERNMENT OF INDIA ENTERPRISE)
ENGINEERING DIVISION

PROJECT: TYPICAL THERMAL POWER PROJECT

TITLE: INTERFACING OF FIELD INSTRUMENTS SWITCH TERMINATION DETAILS NO/NC

REV.NO.	DESCRIPTION	DRAWN	DESIGN	CHKD.	M	E	C	C&I	ARCH.	APPD	DATE
A	FIRST ISSUE										21.08.12

CLEARED BY

SIZE	SCALE	DRG. NO.	REV. NO.
A3	NTS	0000-999-POI-A-065 SH 02 OF 15	A

This document is the property of NATIONAL THERMAL POWER CORPORATION LTD. No part of this document will be reproduced by any means without the written permission.

3745582 LDS-(3X200+3X500+1X500) MW KORBA

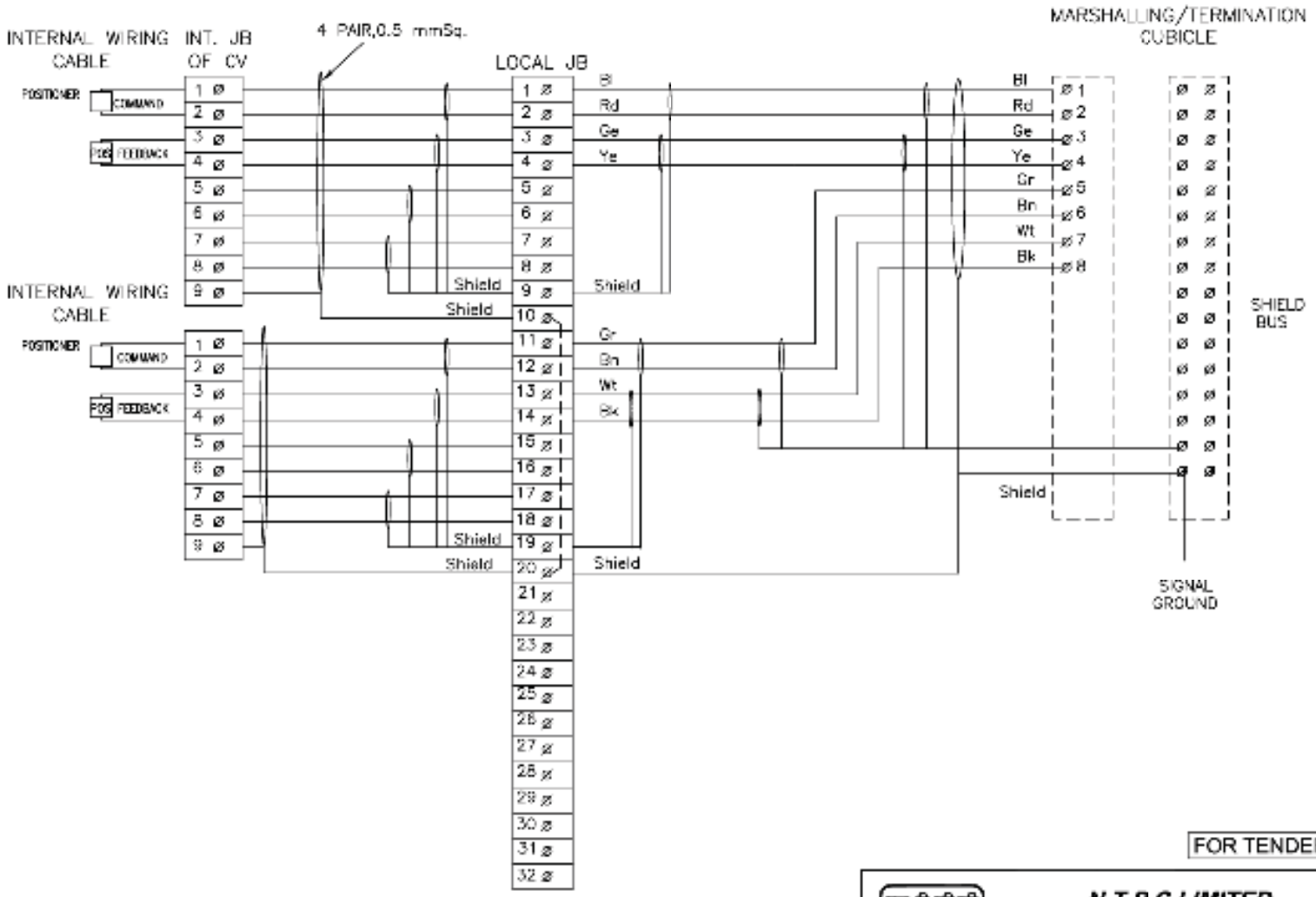

FOR TENDER PURPOSE ONLY

एन टी पी सी
NTPC

N T P C LIMITED
(A GOVERNMENT OF INDIA ENTERPRISE)
ENGINEERING DIVISION

PROJECT: TYPICAL THERMAL POWER PROJECT

TITLE: INTERFACING OF FIELD INSTRUMENTS CONTROL VALVE

REV.NO.	DESCRIPTION	DRAWN	DESIGN	CHKD.	M	E	C	C&I	ARCH.	APPD	DATE
A	FIRST ISSUE										21.08.12

CLEARED BY

SIZE	SCALE	DRG. NO.	REV. NO.
A3	NTS	0000-999-POI-A-065 SH 03 OF 15	A

This document is the property of NATIONAL POWER CORPORATION LTD. No part of this document will be reproduced by any means without the written permission.

375/5682 LDS-(3X200+3X500+1X500) MW KORBA

12319/2020/PS-PEM-MAX

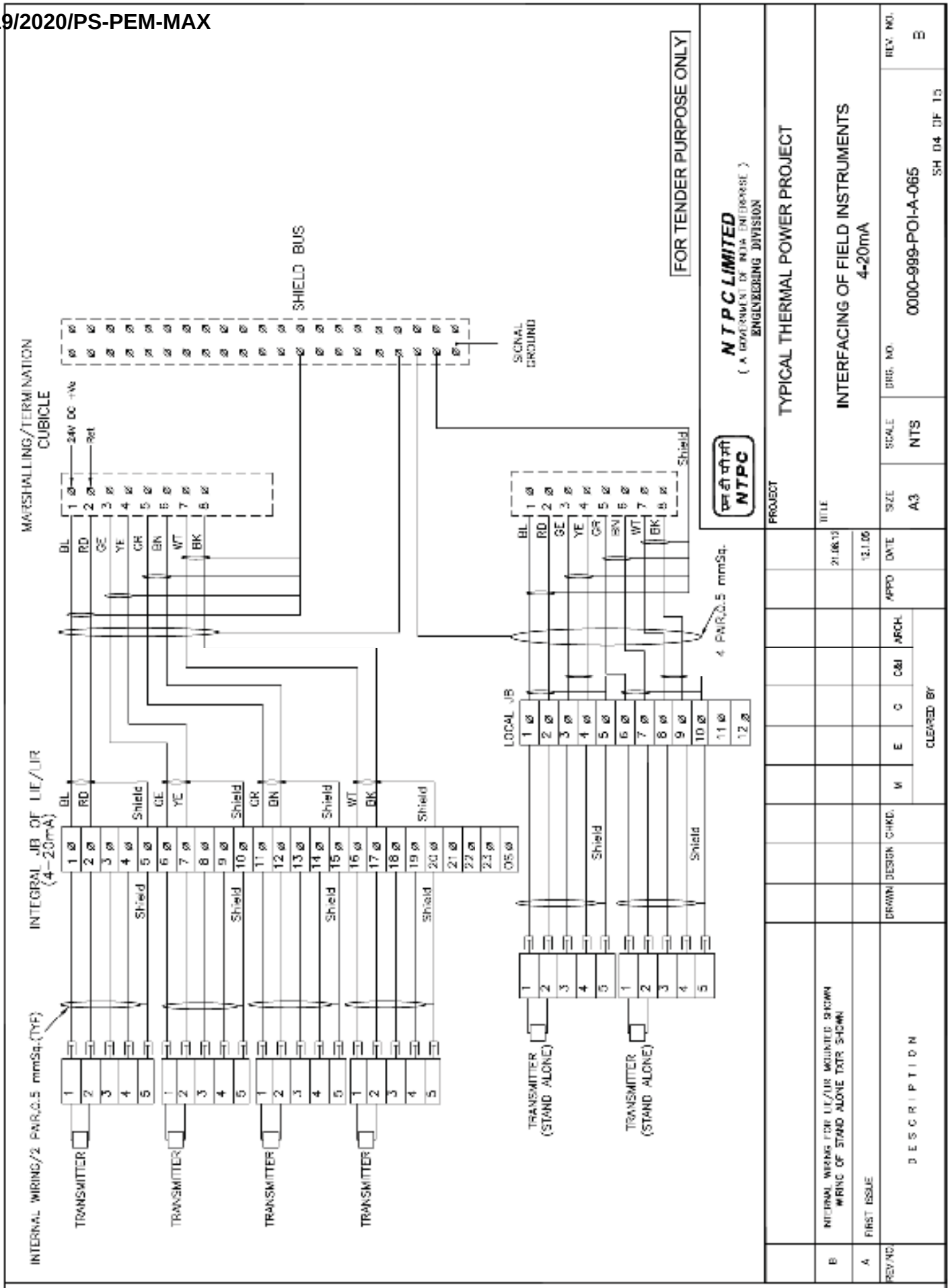

This document is the property of NATIONAL THERMAL POWER CORPORATION LTD.
No part of this document will be reproduced by any means without the written permission.

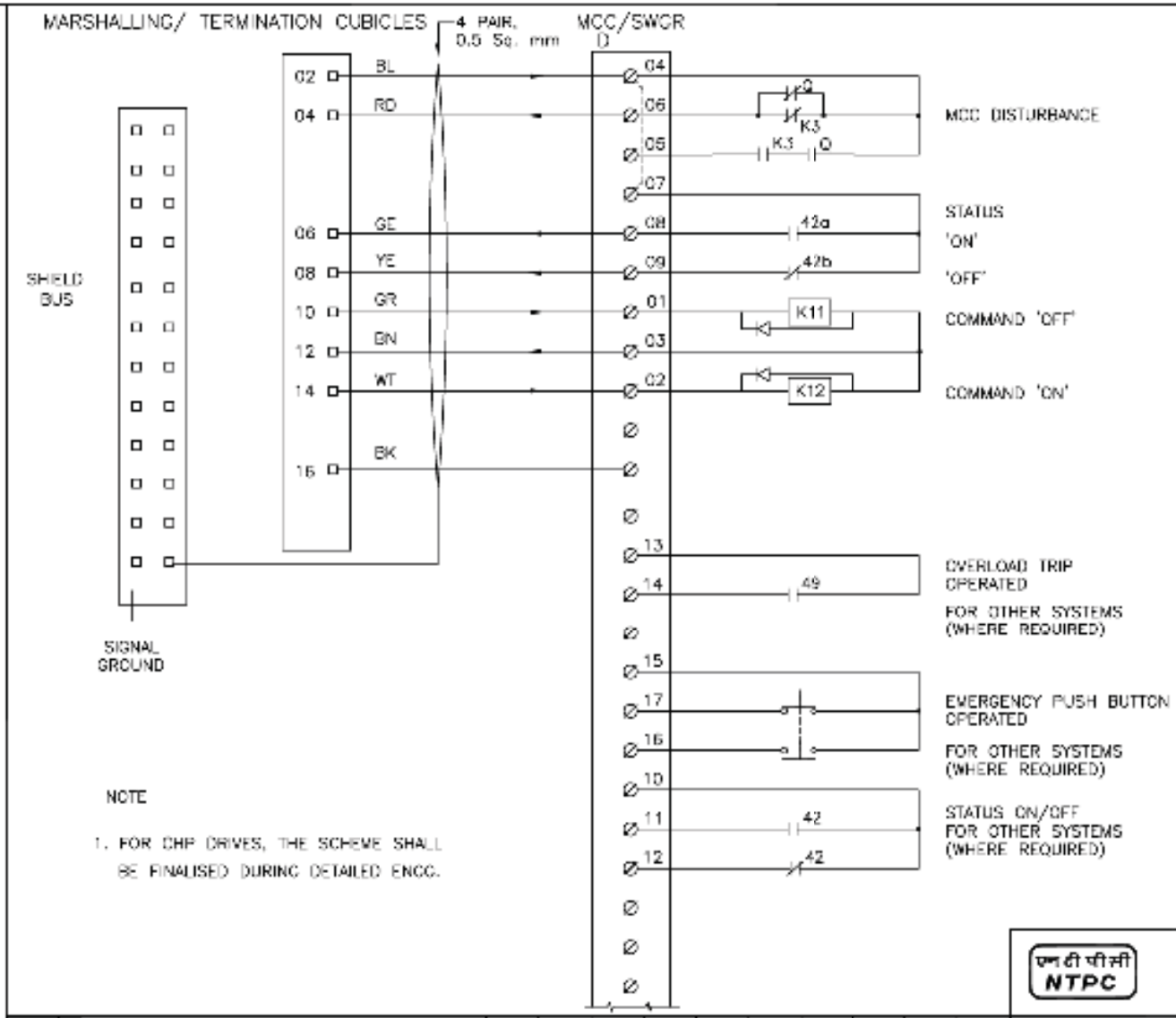

NOTE

1. FOR CHP DRIVES, THE SCHEME SHALL BE FINALISED DURING DETAILED ENGG.

FOR TENDER PURPOSE ONLY

एन टी पी सी NTPC

N T P C LIMITED
(A GOVERNMENT OF INDIA ENTERPRISE)
ENGINEERING DIVISION

PROJECT: TYPICAL THERMAL POWER PROJECT

TITLE: INTERFACING OF FIELD INSTRUMENTS
INTERFACE OF DDCMIS WITH MCC/SWGR/ACTUATOR
(LT MOTORS)

REV. NO.	DESCRIPTION	DRAWN	DESIGN	CHKD.	M	E	C	C&I	ARCH.	APPD	DATE
A	FIRST ISSUE										21.08.12

CLEARED BY

SIZE	SCALE	DRG. NO.	REV. NO.
A3	NTS	0000-999-POI-A-065 SH 05 OF 15	A

This document is the property of NATIONAL THERMAL POWER CORPORATION LTD. No part of this document will be reproduced by any means without the written permission.

QUALITY ASSURANCE FOR INSTRUMENTS & LCP AND TYPE TEST REQUIREMENTS

MEASURING INSTRUMENTS (PRIMARY AND SECONDARY)

TESTS / ITEMS	Dimensions (R)	Make, Model, Type, Rating (R)	Process / Electrical connection (R)	Calibration (R)	Test as per standard(R)	Insulation Resistance (R)	IBR Certification (if applicable)(R)	Hydro Test(R)	Material Test certificate ®
1. PR Gauge (IS-3624)	Y	Y	Y	Y	Y				
2. Temp. Gauge (BS-5235)	Y	Y	Y	Y	Y				
3. Pr./D.P.Switch(BS-6134)	Y	Y	Y	Y	Y	Y			
4. Electronic Transmitter(IEC-60770)	Y	Y	Y	Y	Y	Y			
5. Temp. Switch	Y	Y	Y	Y	Y	Y			
6. Recorder(IS-9319/ANSI C-39.4)	Y	Y	Y	Y	Y	Y			
7. Vertical indicators	Y	Y	Y	Y		Y			
8. Digital Indicators	Y	Y	Y	Y		Y			
9. Integrators	Y	Y	Y	Y					
10. Electrical Metering Instrument (IS-1248)	Y	Y	Y	Y	Y	Y			
11. Transducer (IEC-688)	Y	Y	Y	Y	Y	Y			
12. Thermocouples (IEC – 754 / ANSI-MC-96.1)	Y	Y	Y	Y	Y	Y			
13. RTD(IEC-751)	Y	Y	Y	Y	Y	Y			
14. Thermowell	Y		Y				Y	Y	Y

R-Routine Test A- Acceptance Test Y – Test applicable

: Note: **1) Detailed procedure of Environmental Stress Screening shall be as per Quality Assurance Programme in General Technical Conditions. Requirement of test and procedure (if required) finalized during QP finalization**

2) This is an indicative list of tests/checks. The manufacturer is to furnish a detailed quality plan indicating the Practices and Procedure adopted along with relevant supporting documents.

MEASURING INSTRUMENTS (PRIMARY AND SECONDARY)

TESTS / ITEMS	Dimensions (R)	Make, Model, Type, Rating (R)	Process / Electrical connection (R)	Calibration (R)	Requirement as per standard (R)	WPS approval (A)	Non-destructive testing (R)	Calculation for accuracy (R)	Insulation Resistance (R)	IBR Certification as applicable (R)	Hydro test (R)	Material test certificate (A)
15. Cold junction compensation box	Y	Y	Y	Y					Y			
16. Orifice plate(BS-1042)	Y	Y	Y	Y *	Y	Y **	Y **			Y	Y **	Y
17. Flow nozzle(BS-1042)	Y	Y	Y	Y *	Y	Y	Y			Y	Y	Y
18. Impact head type element	Y	Y	Y					Y				Y
19. Level transmitter/float type switch	Y	Y	Y	Y					Y	Y	Y	Y
20. Analysers	Y	Y	Y	Y								
21. Dust emission monitors	Y	Y	Y	Y								
*Calibration to be carried out on one flow element of each type and size if calibration carried out as type test same shall not be repeated.												
** If applicable												

R-Routine Test A- Acceptance Test Y – Test applicable

Note: 1) Detailed procedure of Environmental Stress screening test shall be as per Quality Assurance Programme in General Technical Conditions. Requirement of test and procedure (if required) finalized during QP finalization

2) This is an indicative list of tests/checks. The manufacturer is to furnish a detailed quality plan indicating the Practices and Procedure adopted along with relevant supporting documents.

CLAUSE NO.	QUALITY ASSURANCE & INSPECTION	एनटीपीसी NTPC

Process, Connection & piping FOR C&I SYSTEMS

TESTS / ITEMS	Visual ®	GA, BOM, Layout of component & construction feature®	Dimension ®	Paint Shade/thickness ®	Flattening, flaring, hydrotest, hardness check as per ASTM standard	Component Ratings ®	Wiring ®	Make, Model, Type, Rating®	IR & HV ®	Review of TC for instrument/devices (R)	Accessability of TBs/Devices ®	Illumination,grounding ®	Tubing ®	Leak/Hydro test(A)	Chemical/physical properties of material (A)	Proof pressure test,Dismantling & reassembly test,Hydraulic impulse and vibration test (R)	Tests as per standards & specification
Local Instrument enclosure	Y	Y	Y	Y		Y	Y	Y	Y	Y	Y	Y	Y	Y			
Local instruments racks	Y	Y	Y	Y		Y	Y	Y	Y	Y	Y	Y	Y	Y			
Junction Box	Y	Y	Y	Y *		Y		Y	Y								
Gauge Board	Y	Y	Y	Y		Y		Y		Y			Y	Y			
Impulse pipes and tubes	Y		Y		Y			Y							Y		
Socket weld fittings ANSI B-16.11	Y		Y					Y							Y		Y
Compression fittings	Y		Y					Y						Y	Y	Y	
Instrument valves & Valve manifolds	Y		Y					Y						Y	Y		
Copper tubings ASTM B75	Y							Y									Y

*-applicable for painted junction boxes.

Note: R-Routine Test A- Acceptance Test Y – Test applicable

Note: This is an indicative list of tests/checks. The manufacturer is to furnish a detailed quality plan indicating the Practices and Procedure adopted alongwith relevant supporting documents.

CLAUSE NO.	QUALITY ASSURANCE & INSPECTION	NTPC

INSTRUMENTATION CABLE

TESTS / ITEMS	Conductor Resistance ® & (A)	High Voltage ® & (A)	Insulation Resistance ® & (A)	Constructional detail, dimensions (A)	Outer-Sheathe/core marking, end sealing (A)	Thermal Stability (A) +	Visual, Surface finish (A) +	Electrical Parameters ** (A) +	Persulphate Test (A) +	Overall/Coverage/Continuity (A)	Swidesh chimney Test (SS-4241475) (A) ++	FRLS Test * (A) ++	Tensile & Elongation before & after aging (A) ++	Vol. Resistivity, at room & Elevated Temp. (A) ++	Spark test report review ®
1. Instrument cable twisted and shielded															
Conductor(IS-8130)	Y			Y			Y								
Insulation(VDE-207)				Y	Y	Y	Y						Y		Y
Pairing/Twisting				Y	Y		Y								
Shielding				Y			Y			Y					
Drain wire	Y			Y			Y		Y	Y					
Inner Sheath				Y	Y	Y	Y					Y	Y		
Outer Sheath				Y	Y	Y	Y					Y	Y		
Over all cable	Y	Y	Y	Y	Y		Y	Y			Y			Y	
Cable Drums(IS-10418)				Y			Y								

Note : High Temp. cables shall be subjected to tests as per VDE-207(Part-6) Compensating cables shall be checked for Thermal EMF/Endurance test as per IS 8784.

Note : This is an indicative list of tests/checks. The manufacture is to furnish a detailed Quality Plan indicating his practice & Procedure along with relevant supporting documents during QP finalization for all items.

Note : ® - Routine Test A - Acceptance Test Y - Test Applicable

Note : Sampling Plan for Acceptance test shall be as per IS 8784 (As applicable)

- * FRLS Tests: Oxygen / Temp Index (ASTM D-2863), Smoke Density Rating (ASTM – D 2843), HCL Emission (IEC-754-1)
- ** Characteristic Impedance, Attenuation, Mutual Capacitance, Cross Talk (As applicable)

\+ Sample size will be One No. of each size/type per lot.

++ Sample size will be One No. sample for complete lot offered irrespective of size/type.

CONTROL DESK, PLC PANEL, SMOKE DETECTOR, FIRE ALARM & CONTROL SYSTEM

ITEMS \ TESTS	Visual ®	GA, BOM ,Lay Out of components ®	Dimensions ®	Paint Shade/Thickness/Adhesion ®	Alignment of Section ®	Component Rating/ Make / Type ®	Wiring ®	IR & HV ®	Review of TC for instruments/ Devices/ Recorders, Indicators/ osaic Items/ Transducers ®	Accessibility of TBS/ Devices ®	Illumination ®	Functional Check for Control Element	Mimic ®	Test as per IEC 1131 ® *	Test as per Std ® & (A)
1. Control Desk	Y	Y	Y	Y	Y	Y	Y	Y	Y	Y	Y	Y	Y		
2. Annunciation/ Control/ PLC Panel	Y	Y	Y	Y		Y	Y	Y	Y	Y	Y			Y	Y
3.Smoke Detectors (UL-268,EN-54 PT-7), Heat Detectors(UL-521/EN 54 PT-5) Annunciation/ Control Panel (UL -864, EN-54, PT-2)															Y

Note: 1) Detailed procedure of Environmental Stress Screening test shall be as per Quality Assurance Programme in General Technical Conditions

2) This is an indicative list of test/ checks. The manufacturer is to furnish a detailed quality plan indicating the Practice and Procedure alongwith relevant supporting documents.

- *Applicable for PLC
- Y - Test Applicable , ® - Routine Test (A) - Acceptance Test

CLAUSE NO.	QUALITY ASSURANCE & INSPECTION	NTPC

CONTROL VALVE ACTUATORS AND ACCESSORIES.

TESTS / ITEMS	Make,model, tag (r)	Dimension®	Surface finish®	Heat treatment®	Material test certificates®	Ibr certificates®	Hydraulic test®	Ut/radiography for >900 lb rating®	Mpi/dp®	Pressure resistance®	Seat leakage®	Timing open/close®	Linearity/hysterisis®	Functional test, review for make and tc of accessories®
CONTROL VALVE AND ACTUATOR														
Overall	Y	Y	Y			Y	Y				Y	Y	Y	Y
Body		Y	Y	Y	Y			Y	Y	Y				
Bonnet		Y	Y	Y	Y									
Trim		Y			Y			Y*						
Pneumatic actuator	Y	Y								Y				
Electro pneumatic positioner	Y													Y

R- ROUTINE TEST A - ACCEPTANCE TEST Y - TEST APPLICABLE

Y* - **UT ON SPINDLE DIA >= 40 MM.**

NOTE : 1) Detailed procedure of environmental stress screening test shall be as per quality assurance programme general technical conditions

2) This is an indicative list of tests/checks. the manufacture is to furnish a detailed quality plan indicating his practice & procedure along with relevant supporting documents during QP finalisation for all item.

CLAUSE NO.	QUALITY ASSURANCE & INSPECTION	NTPC

ELECTRICAL ACTUATOR WITH INTEGRAL STARTER

Test/Attributes / Characteristics / ITEM/ COPONENT/ SUB SYSTEM ASSEMBLY/ TESTING	RPM ®	No Load Current ®	IR & HV Test®	Mounting Dimension®	All routine Test as per Standard & Specification®	Correct Phase Sequence®	Operation & Setting of limit Switch/Torque Switch®	Stall Torque/Current (A)	Hand Wheel operation/ Auto de clutch function (A)	Function of Aux. like Potentiometer, space heater, position indicator	EPT output ®	Grease leakage ®	Local/ Remote (Open-Stop-Close) Operation® Safety check (Single phasing, Phase correction, Tripping etc.) (A)
ELECTRICAL ACTUATOR WITH INTEGRAL STARTER(IS_9334)													
Motor	Y	Y	Y	Y	Y								
Final Testing	Y	Y	Y	Y	Y	Y	Y	Y	Y	Y	Y	Y	Y

Note: 1) Detailed procedure of Environmental Stress Screening test shall be as per Quality Assurance Programme in General Technical Conditions. Requirement of test and procedure finalized during QP finalization

2) This is an indicative list of tests/checks. The manufacturer is to furnish a detailed quality plan indicating the practices and procedure adopted along with relevant supporting documents.

® - Routine Test **(A) - Acceptance Test** **Y - Test applicable**

बी एच ई एल BHEL	MANUFACTURER/ BIDDER/ SUPPLIER NAME & ADDRESS	STANDARD QUALITY PLAN	SPEC. NO :	DATE:
		CUSTOMER :	QP NO.: PE-QP-999-145-1056	DATE: 07.02.2020
		PROJECT:	PO NO.: –	DATE: –
		ITEM: LOCAL CONTROL PANEL / SYSTEM: C&I	SECTION: C	SHEET 1 OF 9

SL. NO.	COMPONENT & OPERATIONS	CHARACTERISTICS	CLASS	TYPE OF CHECK	QUANTUM OF CHECK		REFERENCE DOCUMENT	ACCEPTANCE NORMS	FORMAT OF RECORD	*	AGENCY **			REMARKS
1	2	3	4	5	6 M	6 C/N	7	8	9	D	M	C	N	
	RAW MATERIAL													
1.0	Sheet Steel (CRCA & HR)	1. Chemical Composition	MA	Chemical analysis	Sample	Sample	IS:1079 IS:513	IS:1079 IS:513	Test Certificate	√	P/W	V		
		2. Bend Test	CR	Mech. test	Sample	Sample	IS:1079 IS:513	IS:1079 IS:513	Test Certificate	√	P/W	V		
		3. Surface finish	MA	Visual	100%	10%	Manufacturing Standard	Manufacturing Standard	Inspection Report	√	P/W	—		
		4. Waviness	MA	Visual	100%	10%	Manufacturing Standard	No Waviness	Inspection Report	√	P/W	—		
		5. Thickness	MA	Measurement	100%	10%	Approved Drg/Datasheet	Approved Drg/Datasheet	Inspection Report	√	P/W	V		
		6. Mill marking	MA	Visual	100%	10%	Manufacturing Standard	Manufacturing Standard	Inspection Report	√	P/W	V		
2.0	Flats / Angles / Channels	1. Dimensions	MA	Measurement	Sample	Sample	IS:2062	IS:2062	Test Certificate	√	P/W	—		
		2. Surface Defects	MA	Visual	100%	10%	Manufacturing Standard	Manufacturing Standard	Inspection Report	√	P/W	—		
		3. Straightness	MA	Measurement	100%	10%	Manufacturing Standard	Manufacturing Standard	Inspection Report	√	P/W	—		
		4. Mill marking	MA	Visual	100%	10%	IS:2062	IS:2062	Inspection Report	√	P/W	V		

BHEL					
ENGINEERING			QUALITY		
	Sign & Date	Name		Sign & Date	Name
Prepared by:	14/2/2020	CHETAN MALIK	Checked by:	14/2/2020	KUNDAN PRASAD
Reviewed by:	14/2/2020	RK RAINA	Reviewed by:	14/2/2020	RK JAISWAL

BIDDER/ SUPPLIER	
Sign & Date	
Seal	

FOR CUSTOMER REVIEW & APPROVAL			
Doc No:			
	Sign & Date	Name	Seal
Reviewed by:			
Approved by:			

386/562

LDS-(3X200+3X500+1X500) MW KORBA

बी एच ई एल BHEL	MANUFACTURER/ BIDDER/ SUPPLIER NAME & ADDRESS	STANDARD QUALITY PLAN		SPEC. NO :	DATE:
		CUSTOMER :		QP NO.: PE-QP-999-145-1056	DATE: 07.02.2020
		PROJECT:		PO NO.: --	DATE: --
		ITEM: LOCAL CONTROL PANEL	SYSTEM: C&I	SECTION: C	SHEET 2 OF 9

SL. NO.	COMPONENT & OPERATIONS	CHARACTERISTICS	CLASS	TYPE OF CHECK	QUANTUM OF CHECK		REFERENCE DOCUMENT	ACCEPTANCE NORMS	FORMAT OF RECORD	*	AGENCY			REMARKS
1	2	3	4	5	6		7	8	9	*	**			
					M	C/N				D	M	C	N	
3.0	Cables / Wires	1. Visual / Surface defects	MA	Visual	100%	10%	IS:1554 or IS:694	IS:1554 or IS:694	Inspection Report	√	P/W			
		2. IR and HV	MA	Electrical	100%	10%	IS:1554 or IS:694	IS:1554 or IS:694	Inspection Report	√	P/W			
		3. Conductor a) Resistance b) Size c) Sheet colour	 MA MA MA	 Electrical Measurement Visual	 100% 100% 100%	 10% 10% 10%	IS:1554 or IS:694	IS:1554 or IS:694	Inspection Report	√	P/W			
		4. Type / Routine Test Certificates	MA	Verification	100%	10%	IS:1554 or IS:694	IS:1554 or IS:694	Inspection Report	√	P/W			
4.0	Electrical Components like Annunciator Transformers Lamps Switches PBs Contactors Relays	1. Verification at make and Type	CR	Visual	Sample	Sample	Approved Drg/Datasheet	Approved Drg/Datasheet	Test Certificate	√	P/W			
		2. Verification of Test Certificates	CR	Scrutiny of Type / Routine T.Cs.	100%	10%	Relevant Indian Std & Catalogue	Relevant Indian Std & Catalogue	Inspection Report	√	P/W			
		3. Operation / Functional check	CR	Electrical	Sample+ 100% @	Sample+ 10% @	Relevant Indian Std & Catalogue	Relevant Indian Std & Catalogue	Inspection Report	√	P/W			+ for relay & contactors only

BHEL					
ENGINEERING			QUALITY		
	Sign & Date	Name		Sign & Date	Name
Prepared by:	14/2/2020	CHETAN MALIK	Checked by:	14/02/2020	KUNDAN PRASAD
Reviewed by:	14/2/2020	RK RAINA	Reviewed by:	14/2/2020	RK JAISWAL

BIDDER/ SUPPLIER	
Sign & Date	
Seal	

FOR CUSTOMER REVIEW & APPROVAL			
Doc No:			
	Sign & Date	Name	Seal
Reviewed by:			
Approved by:			

बी एच ई एल BHEL	MANUFACTURER/ BIDDER/ SUPPLIER NAME & ADDRESS	STANDARD QUALITY PLAN	SPEC. NO :	DATE:
		CUSTOMER :	QP NO.: PE-QP-999-145-1056	DATE: 07.02.2020
		PROJECT:	PO NO.: --	DATE: --
		ITEM: LOCAL CONTROL PANEL / SYSTEM: C&I	SECTION: C	SHEET 3 OF 9

SL. NO.	COMPONENT & OPERATIONS	CHARACTERISTICS	CLASS	TYPE OF CHECK	QUANTUM OF CHECK		REFERENCE DOCUMENT	ACCEPTANCE NORMS	FORMAT OF RECORD	*	AGENCY			REMARKS
1	2	3	4	5	6		7	8	9	*	**			
					M	C/N				D	M	C	N	
	Timers, Space Heaters, Thermostat, Indicating meters etc.	4. I.R.	MA	Electrical	100%	10%	Relevant Indian Std & Catalogue	Relevant Indian Std & Catalogue	Inspection Report	√	P/W			@ for all components except relays & contactors.
		5. H.V.	MA	Electrical	100%	10%	Relevant Indian Std & Catalogue	Relevant Indian Std & Catalogue	Inspection Report	√	P/W			
		6. Calibration	MA	Electrical	100%	10%	Relevant Indian Std & Catalogue	Relevant Indian Std & Catalogue	Inspection Report	√	P/W	V		
		7. Pick up / Drop off Voltage	MA	Electrical	100%	10%	Relevant Indian Std & Catalogue	Relevant Indian Std & Catalogue	Inspection Report	√	P/W			
5.0	Misc. Components like Gaskets, Terminal Blocks etc.	1. Verification of Type / Make	MA	Visual	Sample	Sample	Manufacturing Standard	Manufacturing Standard	Test Certificate	√	P/W			
		2. Surface defects	MA	Visual	Sample	Sample	Manufacturing Standard	Manufacturing Standard	Test Certificate	√	P/W			
		3. IR / HV on Terminal Blocks	MA	Electrical	Sample	Sample	Manufacturing Standard	Manufacturing Standard	Test Certificate	√	P/W			
	IN PROCESS INSPECTION													

BHEL					
	ENGINEERING			QUALITY	
	Sign & Date	Name		Sign & Date	Name
Prepared by:	14/2/2020	CHETAN MALIK	Checked by:	14/02/2020	KUNDAN PRASAD
Reviewed by:	14/2/2020	RK RAINA	Reviewed by:	14/2/2020	RK JAISWAL

BIDDER/ SUPPLIER	
Sign & Date	
Seal	

FOR CUSTOMER REVIEW & APPROVAL			
Doc No:			
	Sign & Date	Name	Seal
Reviewed by:			
Approved by:			

बी एच ई एल BHEL	MANUFACTURER/ BIDDER/ SUPPLIER NAME & ADDRESS	STANDARD QUALITY PLAN	SPEC. NO :	DATE:
		CUSTOMER :	QP NO.: PE-QP-999-145-I056	DATE: 07.02.2020
		PROJECT:	PO NO.: –	DATE: --
		ITEM: LOCAL CONTROL PANEL / SYSTEM: C&I	SECTION: C	SHEET 4 OF 9

SL. NO.	COMPONENT & OPERATIONS	CHARACTERISTICS	CLASS	TYPE OF CHECK	QUANTUM OF CHECK		REFERENCE DOCUMENT	ACCEPTANCE NORMS	FORMAT OF RECORD		AGENCY			REMARKS
1	2	3	4	5	6		7	8	9	*	**			
					M	C/N				D	M	C	N	
6.0	Blanking / Bending / Forming	1. Dimensions	MI	Measurement	100%	10%	Approved Drg/Datasheet	Approved Drg/Datasheet	Inspection Report	√	P/W			
		2. Surface defects after bending	MA	Visual	100%	10%	Manufacturing Standard	Manufacturing Standard	Inspection Report	√	P/W			
7.0	Nibbling / Punching	1. Cutout Sizes	MI	Measurement	100%	10%	Approved Drg/Datasheet	Approved Drg/Datasheet	Inspection Report	√	P/W			
		2. Deburring	MA	Visual	100%	10%	Approved Drg/Datasheet	Approved Drg/Datasheet	Inspection Report	√	P/W			
	ASSEMBLY													
8.0	Frame Assembly & Sheet fixing	1. Dimensions	MA	Measurement	100%	10%	Approved Drg/Datasheet	Approved Drg/Datasheet	Inspection Report	√	P/W			
		2. Alignment	MA	Measurement	100%	10%	Approved Drg/Datasheet	Approved Drg/Datasheet	Inspection Report	√	P/W			
		3. Welding Quality	MA	Visual	100%	10%	Approved Drg/Datasheet	Approved Drg/Datasheet	Inspection Report	√	P/W			
		4. Surface defects	MA	Visual	100%	10%	Approved Drg/Datasheet	Approved Drg/Datasheet	Inspection Report	√	P/W			

BHEL					
	ENGINEERING			QUALITY	
	Sign & Date	Name		Sign & Date	Name
Prepared by:	14/5/2020	CHETAN MALIK	Checked by:	14/05/2020	KUNDAN PRASAD
Reviewed by:	14/5/2020	RK RAINA	Reviewed by:	14/5/2020	RK JAISWAL

BIDDER/ SUPPLIER	
Sign & Date	
Seal	

FOR CUSTOMER REVIEW & APPROVAL			
Doc No:			
	Sign & Date	Name	Seal
Reviewed by:			
Approved by:			

बीएच ई एल BHEL	MANUFACTURER/ BIDDER/ SUPPLIER NAME & ADDRESS	STANDARD QUALITY PLAN	SPEC. NO :	DATE:
		CUSTOMER :	QP NO.: PE-QP-999-145-1056	DATE: 07.02.2020
		PROJECT:	PO NO.: –	DATE: –
		ITEM: LOCAL CONTROL PANEL / SYSTEM: C&I	SECTION: C	SHEET 5 OF 9

SL. NO.	COMPONENT & OPERATIONS	CHARACTERISTICS	CLASS	TYPE OF CHECK	QUANTUM OF CHECK		REFERENCE DOCUMENT	ACCEPTANCE NORMS	FORMAT OF RECORD	*	AGENCY **			REMARKS
1	2	3	4	5	6		7	8	9					
					M	C/N				D	M	C	N	
9.0	Pre-treatment and Painting	1. Pretreatment Process	MA	Visual	100%	10%	Manufacturing Standard	Manufacturing Standard	Inspection Report	√	P/W	V		
		2. Process parameters like bath temp. concentration etc.	MA	Measurement	Periodic	Periodic	Manufacturing Standard	Manufacturing Standard	Inspection Report	√	P/W	V		
		3. Dipping / Removal Time	MA	Measurement	100%	10%	Manufacturing Standard	Manufacturing Standard	Inspection Report	√	P/W	V		
		4. Surface quality after every dip	MA	Visual	100%	10%	Manufacturing Standard	Manufacturing Standard	Inspection Report	√	P/W	V		
		5. Primer after phosphating	MA	Visual, Thickness	100%	10%	Manufacturing Standard	Manufacturing Standard	Inspection Report	√	P/W	V		
		6. Putty Application & Rubbing after primer	MA	Visual	100%	10%	Manufacturing Standard	Manufacturing Standard	Inspection Report	√	P/W	V		
		7. Paint first coat	MA	Visual, Thickness	100%	10%	Manufacturing Standard	Manufacturing Standard	Inspection Report	√	P/W	V		

BHEL					
ENGINEERING			QUALITY		
	Sign & Date	Name		Sign & Date	Name
Prepared by:	14/2/2020	CHETAN MALIK	Checked by:	14/02/2020	KUNDAN PRASAD
Reviewed by:	14/2/2020	RK RAINA	Reviewed by:	14/2/2020	RK JAISWAL

BIDDER/ SUPPLIER	
Sign & Date	
Seal	

FOR CUSTOMER REVIEW & APPROVAL			
Doc No:			
	Sign & Date	Name	Seal
Reviewed by:			
Approved by:			

बीएचईएल BHEL	MANUFACTURER/ BIDDER/ SUPPLIER NAME & ADDRESS	STANDARD QUALITY PLAN		SPEC. NO :	DATE:
		CUSTOMER :		QP NO.: PE-QP-999-145-1056	DATE: 07.02.2020
		PROJECT:		PO NO.: –	DATE: –
		ITEM: LOCAL CONTROL PANEL	SYSTEM: C&I	SECTION: C	SHEET 6 OF 9

SL. NO.	COMPONENT & OPERATIONS	CHARACTERISTICS	CLASS	TYPE OF CHECK	QUANTUM OF CHECK		REFERENCE DOCUMENT	ACCEPTANCE NORMS	FORMAT OF RECORD		AGENCY			REMARKS
1	2	3	4	5	6		7	8	9	*	**			
					M	C/N				D	M	C	N	
		8. Putty Application and Rubbing after first coat of paint	MA	Visual	100%	10%	Manufacturing Standard	Manufacturing Standard	Inspection Report	√	P/W	V		
		9. Paint second coat	MA	Visual, Thickness, Scratch test Colour adhesion	100%	10%	Manufacturing Standard	Manufacturing Standard	Inspection Report	√	P/W	V		
10.	Panel Wiring	1. Wiring Layout	MA	Visual	100%	10%	Approved Drg/Datasheet	Approved Drg/Datasheet	Inspection Report	√	P/W			
		2. Wiring Termination (Crimped Lugs)	MA	Visual	100%	10%	Approved Drg/Datasheet	Approved Drg/Datasheet	Inspection Report	√	P/W			
		3. Ferrule numbers	MA	Visual	100%	10%	Approved Drg/Datasheet	Approved Drg/Datasheet	Inspection Report	√	P/W			
		4. Colour of wiring	MA	Visual	100%	10%	Approved Drg/Datasheet	Approved Drg/Datasheet	Inspection Report	√	P/W	V		
		5. Size of Conductor	MA	Measurement	100%	10%	Approved Drg/Datasheet	Approved Drg/Datasheet	Inspection Report	√	P/W	V		
11.	Component Mounting	1. Correct components	MA	Visual	100%	10%	Approved Drg/Datasheet	Approved Drg/Datasheet	Inspection Report	√	P/W			
		2. Fixing	MA	Visual	100%	10%	Approved Drg/Datasheet	Approved Drg/Datasheet	Inspection Report	√	P/W			

BHEL					
ENGINEERING			QUALITY		
	Sign & Date	Name		Sign & Date	Name
Prepared by:	14/2/2020	CHETAN MALIK	Checked by:	14/02/2020	KUNDAN PRASAD
Reviewed by:	14/2/2020	RK RAINA	Reviewed by:	14/2/2020	RK JAISWAL

BIDDER/ SUPPLIER	
Sign & Date	
Seal	

FOR CUSTOMER REVIEW & APPROVAL			
Doc No:			
	Sign & Date	Name	Seal
Reviewed by:			
Approved by:			

बीएचईएल BHEL	MANUFACTURER/ BIDDER/ SUPPLIER NAME & ADDRESS	STANDARD QUALITY PLAN	SPEC. NO :	DATE:
		CUSTOMER :	QP NO.: PE-QP-999-145-1056	DATE: 07.02.2020
		PROJECT:	PO NO.: --	DATE: --
		ITEM: LOCAL CONTROL PANEL / SYSTEM: C&I	SECTION: C	SHEET 7 OF 9

SL. NO.	COMPONENT & OPERATIONS	CHARACTERISTICS	CLASS	TYPE OF CHECK	QUANTUM OF CHECK		REFERENCE DOCUMENT	ACCEPTANCE NORMS	FORMAT OF RECORD	*	AGENCY			REMARKS
1	2	3	4	5	6		7	8	9	*	**			
					M	C/N				D	M	C	N	
	FINAL TESTING													
12.	Final Inspection	1. Workmanship	MA	Visual	100%	10%	Manufacturing Standard	Manufacturing Standard	Inspection Report	√	P/W	W		
		2. Component layout (neatness, accessibility & safety) Mounting / Proper fixing of all components	MA	Visual	100%	10%	Approved Drg/Datasheet	Approved Drg/Datasheet	Inspection Report	√	P/W	W		At Random by BHEL, based on 100 % internal test reports by Mfr.
		3. Components identification Marking / Name plates	MA	Visual	100%	10%	Approved Drg/Datasheet	Approved Drg/Datasheet	Inspection Report	√	P/W	W		
		5. Dimensions	MA	Measurement	100%	10%	Approved Drg/Datasheet	Approved Drg/Datasheet	Inspection Report	√	P/W	W		
		6. Door functioning	MA	Functional	100%	10%	Approved Drg/Datasheet	Approved Drg/Datasheet	Inspection Report	√	P/W	W		At Random by BHEL, based on 100 % internal test reports by Mfr.
		7. Paint Shade	CR	Visual	100%	10%	Approved Drg/Datasheet	Approved Drg/Datasheet	Inspection Report	√	P/W	W		

BHEL					
ENGINEERING			QUALITY		
	Sign & Date	Name		Sign & Date	Name
Prepared by:	14/2/2020	CHETAN MALIK	Checked by:	14/02/2020	KUNDAN PRASAD
Reviewed by:	14/2/2020	RK RAINA	Reviewed by:	14/2/2020	RK JAISWAL

BIDDER/ SUPPLIER	
Sign & Date	
Seal	

FOR CUSTOMER REVIEW & APPROVAL			
Doc No:			
	Sign & Date	Name	Seal
Reviewed by:			
Approved by:			

बी एच ई एल BHEL	MANUFACTURER/ BIDDER/ SUPPLIER NAME & ADDRESS	STANDARD QUALITY PLAN		SPEC. NO :	DATE:
		CUSTOMER :		QP NO.: PE-QP-999-145-I056	DATE: 07.02.2020
		PROJECT:		PO NO.: --	DATE: --
		ITEM: LOCAL CONTROL PANEL	SYSTEM: C&I	SECTION: C	SHEET 8 OF 9

SL. NO.	COMPONENT & OPERATIONS	CHARACTERISTICS	CLASS	TYPE OF CHECK	QUANTUM OF CHECK		REFERENCE DOCUMENT	ACCEPTANCE NORMS	FORMAT OF RECORD	AGENCY				REMARKS
1	2	3	4	5	6		7	8	9	*	**			
					M	C/N				D	M	C	N	
		8. Paint Thickness	CR	Measurement	100%	10%	Approved Drg/Datasheet	Approved Drg/Datasheet	Inspection Report	√	P/W	W		
		9. Workmanship of Gaskets	MA	Visual	100%	10%	Manufacturing Standard	Manufacturing Standard	Inspection Report	√	P/W	W		
		10. Wiring Layout	MA	Visual	100%	10%	Approved Drg/Datasheet	Approved Drg/Datasheet	Inspection Report	√	P/W	W		
		11. Wire Termination	MA	Pulling manually	Sample	Sample	----	Firm termination	Inspection Report	√	P/W	W		
		12. Continuity	MA	Electrical	100%	10%	----	Continuity OK	Inspection Report	√	P/W	W		
13.	TYPE TEST	Degree of Protection	CR	Mech. Protection	Sample	Sample	Approved Drg/Datasheet Relevant IS-13947 Part-1, IS-2148.	Approved Drg/Datasheet Relevant IS-13947 Part-1, IS-2148.	Type Test Certificate	√	P/W	V		
14	ROUTINE TEST	IR before & after HV Test	CR	Electrical	100%	10%	Approved Drg/Datasheet Relevant IS.	Approved Drg/Datasheet Relevant IS.	Inspection Report	√	P/W	W		

BHEL					
ENGINEERING			QUALITY		
	Sign & Date	Name		Sign & Date	Name
Prepared by:	14/2/2020	CHETAN MALIK	Checked by:	14/02/2020	KUNDAN PRASAD
Reviewed by:	14/2/2020	RK RAINA	Reviewed by:	14/2/2020	RK JAISWAL

BIDDER/ SUPPLIER	
Sign & Date	
Seal	

FOR CUSTOMER REVIEW & APPROVAL			
Doc No:			
	Sign & Date	Name	Seal
Reviewed by:			
Approved by:			

3931562

LDS-(3X200+3X500+1X500) MW KORBA

बीएचईएल BHEL	MANUFACTURER/ BIDDER/ SUPPLIER NAME & ADDRESS	STANDARD QUALITY PLAN	SPEC. NO :	DATE:
		CUSTOMER :	QP NO.: PE-QP-999-145-I056	DATE: 07.02.2020
		PROJECT:	PO NO.: --	DATE: --
		ITEM: LOCAL CONTROL PANEL / SYSTEM: C&I	SECTION: C	SHEET 9 OF 9

SL. NO.	COMPONENT & OPERATIONS	CHARACTERISTICS	CLASS	TYPE OF CHECK	QUANTUM OF CHECK		REFERENCE DOCUMENT	ACCEPTANCE NORMS	FORMAT OF RECORD		AGENCY			REMARKS
1	2	3	4	5	6		7	8	9	*	**			
					M	C/N				D	M	C	N	
15	FUCTIONAL TEST	1. Control Logic Operation	CR	Electrical	100%	10%	Approved Drg/Datasheet	Approved Drg/Datasheet	Inspection Report	√	P/W	W		
		2. Instrument Calibration	CR	Electrical	10%	10%	Approved Drg/Datasheet	Approved Drg/Datasheet	Inspection Report	√	P/W	W		
		3. Temperature rise	CR	Electrical	100%	10%	Approved Drg/Datasheet Relevant IS.	Approved Drg/Datasheet Relevant IS.	Inspection Report	√	P/W	W		

NOTES:

1. Customer's specification for painting shall be included in the technical specification. In the absence of Customer's spec. for painting, vendor to obtain BHEL's approval on their painting specification / procedure.
2. Copies of all TC's (Test Certificates) for components shall be submitted to BHEL for verification and acceptance.
3. BHEL reserves the right to conduct repeat tests, if required.

LEGENDS:
*RECORDS, INDENTIFIED WITH "TICK"(√) SHALL BE ESSENTIALLY INCLUDED BY SUPPLIER IN QA DOCUMENTATION, **D**: DOCUMENTATION,
** **M**: SUPPLIER/ MANUFACTURER/ SUB-SUPPLIER, **C**: MAIN SUPPLIER/ BHEL/ THIRD PARTY INSPECTION AGENCY, **N**: CUSTOMER,
P: PERFORM, **W**: WITNESS, **V**: VERIFICATION, AS APPROPRIATE
MA: MAJOR, **MI**: MINOR, **CR**: CRITICAL

BHEL					
ENGINEERING			QUALITY		
	Sign & Date	Name		Sign & Date	Name
Prepared by:	14/2/2020	CHETAN MALIK	Checked by:	14/02/2020	KUNDAN PRASAD
Reviewed by:	14/2/2020	RK RAINA	Reviewed by:	14/2/2020	RK JAISWAL

BIDDER/ SUPPLIER	
Sign & Date	
Seal	

FOR CUSTOMER REVIEW & APPROVAL			
Doc No:			
	Sign & Date	Name	Seal
Reviewed by:			
Approved by:			

TYPE TEST REQUIREMENTS

1.00.00 TYPE TEST REQUIREMENTS

1.01.00 General Requirements

1.01.01 The Contractor shall furnish the type test reports of all type tests as per relevant standards and codes as well as other specific tests indicated in this specification. A list of such tests are given for various equipment in table titled 'TYPE TEST REQUIREMENT FOR C&I SYSTEMS' at the end of this chapter and under the item Special Requirement for Solid State Equipments/Systems. For the balance equipment instrument, type tests may be conducted as per manufactures standard or if required by relevant standard.

(a) Out of the tests listed, the Bidder/ sub-vendor/ manufacturer is required to conduct certain type tests specifically for this contract (and witnessed by Employer or his authorized representative) even if the same had been conducted earlier, as clearly indicated subsequently against such tests.

(b) For the rest, submission of type test results and certificate shall be acceptable provided.

i. The same has been carried out by the Bidder/ sub-vendor on exactly the same model /rating of equipment.

ii. There has been no change in the components from the offered equipment & tested equipment.

iii. The test has been carried out as per the latest standards alongwith amendments as on the date of Bid opening but not more than five (5) year back.

(c) In case the approved equipment is different from the one on which the type test had been conducted earlier or any of the above grounds, then the tests have to be repeated and the cost of such tests shall be borne by the Bidder/ sub-vendor within the quoted price and no extra cost will be payable by the Employer on this account.

1.01.02 As mentioned against certain items, the test certificates for some of the items shall be reviewed and approved by the main Bidder or his authorized representative and the balance have to be approved by the Employer.

1.01.03 The schedule of conduction of type tests/ submission of reports shall be submitted and finalized during pre-award discussion.

CLAUSE NO.	TECHNICAL REQUIREMENTS
1.01.04	For the type tests to be conducted, Contractor shall submit detailed test procedure for approval by Employer. This shall clearly specify test setup, instruments to be used, procedure, acceptance norms (wherever applicable), recording of different parameters, interval of recording precautions to be taken etc. for the tests to be carried out.
1.01.05	The Bidder shall indicate in the relevant BPS schedule, the cost of the type test for each item only for which type tests are to be conducted specifically for this project. The cost shall only be payable after conduction of the respective test in presence of authorize representative of Employer. If a test is waived off, then the cost shall not be payable.
2.00.00	**SPECIAL REQUIREMENT FOR SOLID STATE EQUIPMENTS/ SYSTEMS**
2.01.00	The minimum type test reports, over and above the requirements of above clause, which are to be submitted for each of the major C&I systems Analyzer instruments, various PLCs etc. shall be as indicated below: i) Surge Protections for Solid State Equipments/ Systems All solid state systems/ equipments shall be able to withstand the electrical noise and surges as encountered in actual service conditions and inherent in a power plant. All the solid state systems/ equipments shall be provided with all required protections that needs the surge withstand capability as defined in ANSI 37.90a/ IEEE-472. Hence, all front end cards which receive external signals like Analog input & output modules, Binary input & output modules etc. including power supply, data highway, data links shall be provided with protections that meets the surge withstand capability as defined in ANSI 37.90a/ IEEE-472. Complete details of the features incorporated in electronics systems to meet this requirement, the relevant tests carried out, the test certificates etc. shall be submitted alongwith the proposal. As an alternative to above, suitable class of IEC-60255-4 which is equivalent to ANSI 37.90a/ IEEE-472 may also be adopted for SWC test. ii) Dry Heat test as per IEC-68-2-2 or equivalent. iii) Damp Heat test as per IEC-68-2-3 or equivalent. iv) Vibration test as per IEC-68-2-6 or equivalent. v) Electrostatic discharge tests as per IEC 61000-4-2 or equivalent. vi) Radio frequency immunity test as per EN 50082-2 or equivalent.

CLAUSE NO.	TECHNICAL REQUIREMENTS
	vii) Electromagnetic immunity as per EN 61131-2 or equivalent. Test listed at item no. v, vi, vii, above are applicable for front end cards only as defined under item (i) above.

3.00.00 TYPE TEST REQUIREMENT FOR C&I SYSTEMS

Sl No	Item	Test requirement	Standard	Test to be specifically conducted	NTPC's approval req. On test certificate	Remarks
Col 1	Col 2	Col 3	Col 4	Col 5	Col 6	Col 7
1	Elect. Metering instruments	As per standard (col 4)	IS-1248	No	Yes	
2	Electronic transmitter	As per standard (col 4)	BS-6447 / IEC-60770	No	Yes	
3	INSTRUMENTATION CABLES TWISTED & SHIELDED			No	Yes	
4	Pressure gauge	Degree of protection test	IS-2147	No	No	
		Temp interference test	IS -3624	No	No	
5	Temperature gauge	Degree of protection test	IS-2147	No	No	
6	Pressure & DP switch	Degree of protection test	IS-2147	No	No	
		As per standard (col 4)	BS 6134	No	No	
7	Level switch	Degree of protection test	IS-2147	No	No	
8	Control valves	CV Test	ISA 75.02	No	Yes	
9	Flow Nozzles & Orifice plate	Calibration	ASME PTC , BS 1042	No	Yes	
10	PLCs	All tests as per IEC-1131	IEC-601131	No	Yes	

Sl No	Item	Test requirement	Standard	Test to be specifically conducted	NTPC's approval req. On test certificate	Remarks
Col 1	Col 2	Col 3	Col 4	Col 5	Col 6	Col 7
11	Junction Box	Degree of protection test	IS-13947	No	Yes	
12	Battery charger (Not required for inbuilt chargers)	Degree of protection test	IS-13947	No	No	
		Short circuit current capability	IEC-60146-2	No	Yes	
		Temp rise test without redundant fans	Approved procedure, IEC 60146-2	No	Yes	
		SWC test	Approved procedure	No	Yes	
		Burn-in-test	Approved procedure	No	Yes	
		Efficiency	IEC-60146-2,	No	Yes	
		Audible Noise Test	IEC 60146-2	No	Yes	
		Fuse Clearing Capability	Approved procedure	No	Yes	
		Relative harmonic content	Approved procedure	No	Yes	

Sl No	Item	Test requirement	Standard	Test to be specifically conducted	NTPC's approval req. On test certificate	Remarks
Col 1	Col 2	Col 3	Col 4	Col 5	Col 6	Col 7
		ESD immunity test	IEC-61000-4-2-9(1)	No	Yes	
		Radio interference	IEC 60146-2	No	Yes	
		Over Load Test on Inverter & charger	Approved procedure	No	Yes	
		Restart Test	IEC 60146-2	No	Yes	
		Output voltage tolerance	Approved	No	Yes	
		Output voltage Harmonic content	Approved procedure	No	Yes	
		Insulation test	IEC 60146	No	Yes	
		Load Tests	Approved procedure	No	Yes	
		Preliminary light load test	IEC 60146	No	Yes	
		Current division / Voltage division	IEC 60146-2	No	Yes	
13	Battery	As per standard (col 4)	IEC –623 / IS 10918 for Ni-Cd IS-1652 for Plante Lead Acid	No	Yes	
14	Voltage stabilizers	Over Load Test	Approved procedure	No	Yes	

Sl No	Item	Test requirement	Standard	Test to be specifically conducted	NTPC's approval req. On test certificate	Remarks
Col 1	Col 2	Col 3	Col 4	Col 5	Col 6	Col 7
		Temp rise test without redundant fans	Approved procedure	No	Yes	

MANDATORY SPARES

Refer Annexure-II, Sub Section-D, Section-I of Technical Specification for mandatory spares of C&I.

SUB VENDOR LIST

PACKAGE WISE REGISTERED SUPPLIER LIST (PERMANENT CATEGORY) AS ON 2/22/2020 3:23:31 PM

Sl No	Package Name	Supplier Name	Supplier Communication Address	Supplier Works Address
1	CONTROL VALVE	Valvitalia S.P.A. ,	Mr. Salvatore Ruggeri Via Tortona 69, Rivanazzano (Pavia) Phone- +39-03839459875 Pincode : 27055 Email : dario.torluccio@valviatalia.com	Works-1->Mr. Salvatore Ruggeri Via Tortona 69,Rivanazzano (Pavia) -- Italy Phone- +39-03839459875 FAX : Pincode : 27055 Email : dario.torluccio@valviatalia.com; diego.poletti@valvitalia.com; sales@bhgassociates.com
2	CONTROL VALVE	R.K.CONTROL INSTRUMENTS PVT. LTD.	PLOT NO.A-250, OPP.POLICE STATION, WAGLE INDUSTRIAL ESTATE, THANE Phone- 25820943/2331 Pincode : 400604 Email : rkcipl@vsnl.com ; rkcinpvt@bol.net.in	Works-1->SAVITH KUMAR PLOT NO. A-250, OPP.POLICE STATION,WAGLE INDUSTRIAL ESTATE, THANE -THANE-MAHARASHTRA INDIA Phone- 022-'66060942 FAX : 022-25820801 Pincode : 400 604 Email : rkadmin@rkcipl.co.in
3	CONTROL VALVE	Mascot Valves Pvt. Ltd.	166-167 GIDC Naroda Ahmedabad Phone- 0792282 1619 Pincode : 382330 Email : dom.sales@mascotvalves.com	Works-1->Varun Patel Dir 166-167 ,GIDC Naroda -Ahmedabad-GUJARAT India Phone- 0792282 1619 / 3369 FAX : Pincode : 382330 Email : dom.sales@mascotvalves.com
4	CONTROL VALVE	EMERSON PROCESS MANAGEMENT CHENNAI LIMITED	147, KARAPAKKAM VILLAGE, CHENNAI Phone- 23722184, 23716242 Pincode : 600096 Email : jatinder.singh@emerson.com	Works-1->Mr. Rangarajan (Head - Lean and Manufact 147,Karapakkam Village, -Chennai-TAMIL NADU India Phone- 0444903 4395 FAX : Pincode : 600097 Email : Rangarajan.M@emerson.com
5	CONTROL VALVE	Severn Glocon India Pvt. Ltd.	F96 & F97, Sipcot Industrial Park, Irungattukottai, Chennai, Phone- 044-47104200, Pincode : 602117, Email : info@severnglocon.co.in,	Works-1->Mr. K.Kaushik, F96 & F97, Sipcot Industrial Park,Irungattukottai, -Chennai-TAMIL NADU India Phone- 044-47104200, FAX : 044-47100073, Pincode : 602117, Email : info@severnglocon.co.in
6	CONTROL VALVE	BOMAFA SPECIAL VALVE SOLUTIONS PVT LTD	Mr. K.M. Anklesaria/ R. M. Anklesaria Plot No: 285/2, Panchratna Estate, Near Ramol Bridge, Vatva Ahmedabad Phone- 079-40083825 Pincode : 382445 Email : info@bomafa-india.com	Works-1->Mr. K.M. Anklesaria/ Mr. R.M. Anklesaria Dir Plot No: 285/2, Panchratna Estate, Near Ramol Bridge, Vatva, -Ahmedabad-GUJARAT INDIA Phone- 079-40083825 FAX : Pincode : 382445 Email : info@bomafa-india.com
7	CONTROL VALVE	FORBES MARSHALL ARCA PVT.LTD.	A-34/35 , MIDC ESTATE, H-BLOCK, PIMPRI, PUNE, Phone- 020-27442020, Pincode : 411018 Email : mnadgaundi@forbesmarshall.com	Works-1->Mr. Sanjeev Shinde A-34/35 MIDC Estate,H Block, Pimpri, -Pune-MAHARASHTRA India Phone- 9323176406 FAX : 020-27442040 Pincode : 411018 Email : sshinde@forbesmarshall.com
8	CONTROL VALVE	INSTRUMENTATION LTD.	KANJIKODE WEST, PALALKKAD, PALAKKAD Phone- 2566127-130,2567128 Pincode : 678623 Email : icvldil@gmail.com;fa2@ilpgt.com	Works-1->D.SASIDHARAN, AGM(Works&PPC) KANJIKODE WEST, -PALAKKAD-KERALA INDIA Phone- 0491-2566536 FAX : 0491-2566135 Pincode : 678623 Email : sasidharan@ilpgt.com;mraj@ilpgt.com;gireesh@ilpgt.com, commercial@ilpgt.com;fa2@ilpgt.com;nazeera@ilpgt.com;pkv@ilpgt.com;remith@ilpgt.com
9	CONTROL VALVE	Koso India Private Limited,	H 33 & 34, MIDC, Ambad, Nashik, Phone- 09650233433 Pincode : 422010, Email : jetmal.gour@koso.co.in	Works-1->P.J.ASHOK KUMAR/SEEMA ANAND Control Valve Division, H-33&34, MIDC, Ambad, -Nashik-MAHARASHTRA India Phone- 91 944 744 3198 FAX : 0491 - 5269914 Pincode : 422010 Email : pja@koso.co.in;enquiry@koso.co.in Works-2->+P.J.ASHOK KUMAR/SEEMA ANAND J-1,MIDC,Ambad -Nashik-MAHARASHTRA India Phone- 91 944 744 3198 FAX : 0491 - 5269914 Pincode : 422010 Email : pja@koso.co.in;enquiry@koso.co.in
10	CONTROL VALVE	SAMSON CONTROLS PVT. LTD.	Mr. Atul raje-MD D 281, MIDC Ranjangaon Ta Shirur Pune Phone- 02067246600 Pincode : 412220 Email : sales@samsoncontrols.net	Works-1-> Others D 281, MIDC Ranjangaon -Pune-MAHARASHTRA India Phone- 02067246600,8554997963 FAX : Pincode : 412220 Email : sales@samsoncontrols.net
11	CONTROL VALVE	KSB MIL CONTROLS LTD.	Mr.Jacob Cherian/Mr.Geo Jolly Meladoor, Annamanada P.O. MALA, Thrissur Phone- 0480-2695700 Pincode : 680741 Email : biju.simon@ksb.com	Works-1->Mr.Biju Simon/Mr.Jose Paul Meladoor, Annamanada, -Thrissur-KERALA INDIA Phone- 9447555500 FAX : 91 480 2890952 Pincode : 680741 Email : jose.paul@ksb.com

12	CONTROL VALVE	SUZHOU DELAN ENERGY SCIENCE & TECHNOLOGY CO., LTD.	No 566 Fangqiao Road Caohu Industrial Park, Xiangcheng Economic Development Zone, Suzhou Phone- 008618012776062 Pincode : 215143 Email : jeanielei@delan-valve.com	Works-1->Mr. Zong Xin CEO No 566 Fangqiao Road Caohu Industrial Park,Xiangcheng E. Z. -Suzhou-Foreign Country CHINA Phone- 008618012776062 FAX : Pincode : 215143 Email : jeanielei@delan-valve.com
13	CONTROL VALVE	WALDEMAR PRUSS ARMATURENFABRIK GMBH	Mr. Winfried Dremhel Schulenburgerlandstrasse 261, Hannover Phone- +49-511279260 Pincode : 30419 Email : dremhel@pruss.de; vogel@pruss.de	Works-1->Mr. Winfried Dremhel CEO Schulenburgerlandstrasse 261, -Hannover-GERMANY Phone- +49-511279260 FAX : Pincode : 30419 Email : dremhel@pruss.de
14	PRESSURE SWITCH/DIFF. PRESSURE SWITCH	Kaustubha Udyog,	S.No. 36/1/1, Sinhgad Road, Vadgaon Khurd, Near Lokmat Press, Pune, Phone- 020-24393577, Pincode : Email : pressure@vsnl.com,	
15	PRESSURE SWITCH/DIFF. PRESSURE SWITCH	PRECISION MASS PRODUCTS PVT. LTD.	Mr. Nishit Patel/Mr. Anuj Verma Plot No.2306, Phase II, GIDC Chhatral Kalol Phone- 9999464663 Pincode : 382729 Email : sales@precisionmass.com	Works-1->Mr. Hitesh Parmar/Mr. Hitesh Parmar Plot No.2306, Phase II, GIDC Chhatral, -Kalol-GUJARAT INDIA Phone- 9327359227 FAX : 02764-233440 Pincode : 382729 Email : hitesh.parmar@ashcroftindia.com
16	PRESSURE SWITCH/DIFF. PRESSURE SWITCH	SWITZER PROCESS INSTRUMENTS PVT. LTD.	Mr. V S Jayaprakash, 128, SIDCO North Phase, Ambattur Estates CHENNAI Phone- 044-26252017/2018 Pincode : 600050 Email : sales@switzerprocess.co.in	Works-1->C S Shankar 127, Sidco North Phase, Ambattur Estates, -CHENNAI-TAMIL NADU INDIA Phone- 8754491904 FAX : 044-26248849 Pincode : 600050 Email : cservice@switzerinstrument.com
17	PRESSURE SWITCH/DIFF. PRESSURE SWITCH	GENERAL INSTRUMENTS CONSORTIUM	Mr. Amarendra Kulkarni 194/195, Gopi Tank Road, Off. Pandurang Naik Marg, Mahim Mumbai Phone- 9323195251 Pincode : 400016 Email : amarendra@general-gauges.com	
18	PRESSURE SWITCH/DIFF. PRESSURE SWITCH	Barksdale GmbH, Germany	Michael Weileder Dorn Assenheimer, Strasse 27 Reichelsheim Phone- +91-9999107840 Pincode : D-61203 Email : msingh@barksdale.de	
19	PRESSURE SWITCH/DIFF. PRESSURE SWITCH	DRESSER INDUSTRIES INC.	Mr. Nishit Patel/Mr. Anuj Verma Plot No.2306, Phase II, GIDC Chhatral Kalol Phone- 02764-233682 Pincode : 382729 Email : Nishit.patel@ashcroftindia.com	
20	PRESSURE SWITCH/DIFF. PRESSURE SWITCH	SOR INC.	LARRY DEGARMO/Avdhesh Chandra, 14685 W. 105TH STREET LENEXA Phone- 09810905139, Pincode : 66215 Email : Ldegarmo@sorinc.com, avdhesh@sherman-india.com	Works-1->LARRY DEGARMO/ ROY STUMBOUGH 14685 W. 105TH STREET, LENEXA -KANSAS- USA Phone- 913-888-0767 FAX : 913-888-0767 Pincode : 66215 Email : rstumbough@sorinc.com
21	PRESSURE SWITCH/DIFF. PRESSURE SWITCH	INDFOS INDUSTRIES LIMITED	B-20-21, INDUSTRIAL AREA, MEERUT ROAD, GHAZIABAD Phone- 0120-2712016 Pincode : Email : mktg@indfos.com	
22	PRESSURE SWITCH/DIFF. PRESSURE SWITCH	INDFOS (INDIA) LIMITED	MR.L.C.VENKATRANGAN/MR.B.KANNAN New No.17, II Floor, Adwave Towers, Dr.Sevalia Shivaji Salai, T.Nagar Chennai Phone- +91 44 24353407 Pincode : 600017 Email : delhi@indfos.com	
23	PRESSURE GAUGE/ DIFF.PRESSURE GAUGE	BOSE PANDA INSTRUMENTS PVT.LTD.	Mr. Partha Bose 44, Saheed Hemanta Kumar Bose, Sarani, Kolkata Phone- +91 33 2548 7220 Pincode : 700074 Email : parthabosebpi@gmail.com; bosepanda@vsnl.net	Works-1->Mr. Partha Bose 44, Saheed Hemanta Kumar Bose,Sarani, -Kolkata-WEST BENGAL India Phone- +91 33 2548 7220 FAX : +91 33 2548 0429, Pincode : 700074 Email : parthabosebpi@gmail.com bosepanda@vsnl.net
24	PRESSURE GAUGE/ DIFF.PRESSURE GAUGE	A.N. INSTRUMENTS PVT. LTD.	MARKETING DIVISION, 5th FLOOR, 59-B, CHOWRINGHEE ROAD, KOLKATA Phone- 24757784,22472509 Pincode : 700020 Email : anidel@bol.net.in	Works-1->Mr. Gautam Mukherjee Kusumba,Sonarpur Station Road,P.O. -Narendrapur, -Kolkata-WEST BENGAL INDIA Phone- 9836878855 FAX : 033-24342748 Pincode : 700103 Email : gkm_ani@hotmail.com
25	PRESSURE GAUGE/ DIFF.PRESSURE GAUGE	H.GURU INDUSTRIES	Mr. G. D. Hazra/Mr. P. K. Mitra 10 B, HO-CHI-MINH SARANI, KOLKATA Phone- 033 2282 2463 / 1637 Pincode : 700071 Email : mguru@vsnl.net	Works-1->NA NA -- Phone- FAX : Pincode : Email :

26	PRESSURE GAUGE/ DIFF.PRESSURE GAUGE	FORBES MARSHALL (HYD) LTD.	MR SAILESH PATALAY/MR. M K SRINIVASAN PLOT NO.A-19/2, & T-4/2, IDA, NACHARAM, HYDERABAD Phone- 9849913704 Pincode : 500 076 Email : mksrinivasan@forbesmarshall.com	Works-1->MR G.SRINIVASAN/MR ANUJ MALPANI PLOT NO:A-19/2 & T-4/2,I.DA. NACHARAM , -HYDERABAD-TELANGANA INDIA Phone- 09866550762 FAX : 040 27152193 Pincode : 560076 Email : gshrinivasan@forbesmarshall.com
27	PRESSURE GAUGE/ DIFF.PRESSURE GAUGE	PRECISION MASS PRODUCTS PVT. LTD.	Mr. Nishit Patel/Mr. Anuj Verma Plot No.2306, Phase II, GIDC Chhatral Kalol Phone- 9999464663 Pincode : 382729 Email : sales@precisionmass.com	Works-1->Mr. Hitesh Parmar/Mr. Hitesh Parmar Plot No.2306, Phase II, GIDC Chhatral, -Kalol-GUJARAT INDIA Phone- 9327359227 FAX : 02764-233440 Pincode : 382729 Email : hitesh.parmar@ashcroftindia.com
28	PRESSURE GAUGE/ DIFF.PRESSURE GAUGE	Baumer Technologies India Pvt. Ltd.	Mr. Shyam Warilani/Mr. V Suresh Babu 36, DAMJI SHAMJI INDUSTRIAL COMPLEX, OFF.-MAHAKALI CAVES ROAD, ANDHERI(E) MUMBAI Phone- +91 99589 25151 Pincode : 400093 Email : sales.in@baumer.com	Works-1->Mr. Shyam Warilani/Mr. V Suresh Babu Plot No 34 À GIDC À Phase 1, -VAPI-GUJARAT INDIA Phone- +91 11 4161 7111 FAX : 022 2687 3613 Pincode : 396 195 Email : pbajaj@baumer.com
29	PRESSURE GAUGE/ DIFF.PRESSURE GAUGE	H.GURU INSTRUMENTS (SOUTH INDIA) P. LTD	32,INDUSTRIAL SUBURB YESWANTHAPUR BANGALORE Phone- 080-23370300, Pincode : 560022 Email : info@hgurusouth.com	Works-1->Shikha Hazra/ Shyamal Hazra 32, Industrial Suburb,Yeshwanthpur -BANGALORE-KARNATAKA INDIA Phone- 080-23370300 FAX : 080-23379890 Pincode : 560022 Email : shikhahazra@hgurusouth.com
30	PRESSURE GAUGE/ DIFF.PRESSURE GAUGE	GAUGE BOURDON INDIA PVT. LTD.	194/195, Gopi Tank Road, Off Pandurang Naik Marg, Mahim Mumbai, Phone- 011-41607463, Pincode : 400016, Email : gicdelhi@general-gauges.com,	Works-1->Gauge Bourdon India Pvt. Ltd., Plot No-4, 5, 6,Jawahar Co-operative Industrial Estate, -Kalamboli Taluka Panvel-MAHARASHTRA India Phone- 022-27421095, FAX : 022-27421901, Pincode : 410209, Email : info@general-gauges.com
31	PRESSURE GAUGE/ DIFF.PRESSURE GAUGE	Nesstech Instruments Private Limited	26/2, G Type, Global Industrial Park Near Nahuli Railway Crossing, Valvada Vapi Phone- 9920576002 Pincode : 396105 Email : sales@nesstech.co.in	Works-1-> Others 26/2, G Type, Global Ind. Park Near Nahuli Railway Crossing, -Vapi-GUJARAT INDIA Phone- 9920576002 FAX : Pincode : 396105 Email : sales@nesstech.co.in, bkapadia@nesstech.co.in
32	PRESSURE GAUGE/ DIFF.PRESSURE GAUGE	SCIENTIFIC DEVICES (BOMBAY) PVT LTD,	Office no. 53, Shree Manoshi Complex, Plot No. 5 & 6, Sec-3, Ghansoli (East), Navi Mumbai, Phone- 9892230623, Pincode : 400 701, Email : sdbpl@vsnl.com	Works-1->Scientific Center, Others By-Pass Junction,Near Kalsekar College kausa, mumbra,Thane -Mumbai-MAHARASHTRA INDIA Phone- 022-25491409,9892230623 FAX : Pincode : 400612 Email : sdbpl@vsnl.com
33	LEVEL GAUGE	TOSHNIWAL BROTHERS PVT.LTD.	WORKS:TOSHNIWAL IND.PVT.LTD, INDUSTRIAL ESTATE MAKHUPURA, AJMER Phone- 441171 Pincode : 305002 Email : toshniwalprocess@gmail.com	
34	LEVEL GAUGE	BLISS ANAND PVT. LTD.	Mr. Vikas Anand/ Mr.RGRajan 92B & 93 B , IMT MANESAR Gurgaon Phone- 0124-4366000 TO 9 Pincode : 122001 Email : sales@blissanand.com	Works-1->Mr. Bharat Kumar/ Mr. Sasi Kumar Plot No. 92B & 93B,Sec-V, IMTManesar -GURGAON-HARYANA INDIA Phone- 0124-4366000 TO 9 FAX : 0124-2290884 Pincode : 122002 Email : bharat@blissanand .com
35	LEVEL GAUGE	SIGMA INSTRUMENTS CO.	Gopal Kannan/R Gopinath 201, ANANDRAJ INDUSTRIAL ESTATE, OFF.LBS MARG, SONAPUR LANE, BHANDUP (W) MUMBAI Phone- +919821038162 Pincode : 400078 Email : sales@sigmainstruments.co.in	Works-1->R Gopinath 27 Nahur Udyog Industrial Premises,M.M.Malviya Road, Mulund(-MUMBAI-MAHARASHTRA INDIA Phone- +912225918567 FAX : +912225918566 Pincode : 400080 Email : sales@sigmainstruments.co.in
36	TRANSMITTERS	TOSHNIWAL INDUSTRIES PVT. LTD.,	Industrial Estate, Makhupura, Ajmer, Phone- 9352009000, Pincode : 305002, Email : info@tipl.com,	Works-1-> Khasra No.: 218-230& 235, Industrial Estate,Makhupura, -Ajmer-RAJASTHAN India Phone- 9887865856, FAX : 0145-2695174, Pincode : 305002, Email : rajeev.gupta@tipl.com
37	TRANSMITTERS	YOKOGAWA INDIA LIMITED,	PLOT NO.96, ELECTRONICS CITY COMPLEX, HOSUR ROAD, BANGALORE, Phone- 080-41586000, Pincode : Email : uday.shankar@in.yokogawa.com,	Works-1-> PLOT NO.96, ELECTRONICS CITY COMPLEX, HOSUR ROAD, -BANGALORE-KARNATAKA INDIA Phone- 080-41586000, FAX : 080-28521442, Pincode : Email : uday.shankar@in.yokogawa.com
38	TRANSMITTERS	ABB INDIA LIMITED	MR. RAJIV GOVIL 14, MATHURA ROAD, FARIDABAD Phone- 09971085678 Pincode : 121003 Email : vipin.swami@in.abb.com	

39	TRANSMITTERS	V.AUTOMAT & INTRUMENTS (P) LTD.	Mr. R. K. BASSI/Mr. PRAVEEN KUMAR F-61, OKHLA INDL.AREA, PH-1 NEW DELHI Phone- 9810005826 Pincode : 110 020 Email : sales@vautomat.com	Works-1->Mr. BHAGWAN SINGH/ Mr. NANDAN SINGH F-61, OKHLA INDL.AREA,PHASE-I -NEW DELHI-DELHI INDIA Phone- 011-47627200 Extn. 3 FAX : 011- 26819440 Pincode : 110 020 Email : production@vautomat.com
40	TRANSMITTERS	Pune Techtrol Pvt. Ltd.	N.P.Khatan/Sudhakar Badiger S-18, MIDC Bhosari, Pune Phone- 9850560042 Pincode : 411 026 Email : ho@punetechtrol.com	
41	TRANSMITTERS	PANAM ENGINEERS	Mr. Santosh Shukla 203, Jaisingh Business,Parsiwada, Sahar road,Andheri(East), Mumbai, Phone- 9892179529, Pincode : 400099, Email : santosh@panamengineers.com	Works-1->Mr. Santosh Shukla Others R-628,TTC Industrial Area, MIDC Rabale, -Navi Mumbai-MAHARASHTRA India Phone- 9821350761, FAX : 022-27695559, Pincode : 400701, Email : sales@panamengineers.com
42	TRANSMITTERS	SBEM PVT. LTD.	MR.N.K. BEDARKAR/MR. VISHWANATH KARANDIK 39, ELECTRONIC CO.OP. ESTATE, PUNE SATARA ROAD PUNE, Phone- 912041030100 Pincode : 411009 Email : newdelhi@sbem.co.in	Works-1->MR. MOHAN PADWAL 691/A/2,BIBWEWADI INDL ESTATE -PUNE-MAHARASHTRA INDIA Phone- 918600042374 FAX : 912024215670 Pincode : 411037 Email : wm@sbem.co.in
43	TRANSMITTERS	Endress + Hauser (India) Pvt. Ltd.,	Mr. Prakash Vaghela 215-216, DLF Tower 'A', Jasola District Centre, New Delhi, Phone- 9717593001, Pincode : 110025, Email : prakash.vaghela@in.endress.com,	Works-1-> M-171 to 173, MIDC, Waluj, -Aurangabad-MAHARASHTRA India Phone- 9881000474, FAX : 0240-2555179, Pincode : 431136, Email : Narendra.Kulkarni@wetzer.endress.com
44	TRANSMITTERS	Moore Industries International Inc.	Leonard.W. Moore/ Matt Moren 16650 Schoenborn St. North Hills Phone- +1 818 830 5548 Pincode : 91343 Email : mmoren@miinet.com	Works-1->Matt Moren/Gina Cruz 16650 Schoenborn St., North Hills -CALIFORNIA- USA Phone- +1 818 894 7111, ext FAX : +1 818 830 5588 Pincode : 91343 Email : gcruz@miinet.com
45	TRANSMITTERS	EMERSON PROCESS MANAGEMENT (INDIA) PVT.LTD.	Mr. Amit Paithankar/Vikram Raj Singh 206-210,BALARAMA BUILDING 2ND FLR. BANDRA EAST MUMBAI Phone- 9619121500 Pincode : 400051 Email : vikramraj.singh@emerson.com	Works-1->Kalpesh Chandan/Hrishikesh Aghor Plot No. A 145/4 TTC IND AREA,MIDC, PAWANE, -NAVI MUMBAI-MAHARASHTRA INDIA Phone- 9619688001 FAX : 022-66736000 Pincode : 400 705 Email : Kalpesh.chandan@emerson.com
46	TRANSMITTERS	NIVO CONTROLS PVT. LTD.	Mr. Praveen Toshniwal 104-115, Electronic Complex, Indore Phone- 0731-4081305 Pincode : 452010 Email : sales@nivocontrols.com	Works-1->Mr. S L Sadani Others 104 -115,Electronic Complex -Indore-MADHYA PRADESH INDIA Phone- 0731-4081307 FAX : Pincode : 452010 Email : sales@nivocontrols.com;sadanis@nivocontrols.com
47	TRANSMITTERS	SMART INSTRUMENTS LTD, BRAZIL	Agents: Digital Electronic Ltd. 74/11 'C' Cross Road MIDC Andheri (East) MUMBAI Phone- 28208477 Pincode : 400093 Email : corp@delbby.rpgms.ems.vsnl.net.in	
48	TRANSMITTERS	SIEMENS LIMITED	Dr. Armin Bruck/Sandeep Mathur 130, Pandurang Budhkar Marg Worli Mumbai Phone- 0124 383 7377 Pincode : 400018 Email : ankit.varshney@siemens.com	Works-1->Ankit Varshney Kalwa Works, Thane-Belapur Road, Thane, -MUMBAI-MAHARASHTRA INDIA Phone- FAX : Pincode : 400708 Email :
49	TRANSMITTERS	Honeywell Automation India Limited	Mr. Ritwij Kulkarni 917, INTERNATIONAL TRADE TOWER, NEHRU PLACE, NEW DELHI Phone- 9890200584 Pincode : 110019 Email : rajesh.chaudhary@honeywell.com	Works-1->Mr.Kedar Tillu 53, 54, 56 & 57,Hadapsar Industrial Estate -PUNE-MAHARASHTRA INDIA Phone- 9665034625 FAX : 020 66039905 Pincode : 411013 Email : kedar.tillu@honeywell.com
50	SIGHT FLOW INDICATORS	V. AUTOMAT & INTRUMENTS (P) LTD.	Mr. R. K. BASSI/Mr. PRAVEEN KUMAR F-61, OKHLA INDL.AREA, PH-1 NEW DELHI Phone- 9810005826 Pincode : 110 020 Email : sales@vautomat.com	Works-1->Mr. BHAGWAN SINGH/ Mr. NANDAN SINGH F-34, OKHLA INDL.AREA,PHASE-I -NEW DELHI-DELHI INDIA Phone- 011-47627200 Extn. 3 FAX : 011- 26819440 Pincode : 110 020 Email : production@vautomat.com
51	SIGHT FLOW INDICATORS	SCIENTIFIC DEVICES (BOMBAY) PVT LTD,	Office no. 53, Shree Manoshi Complex, Plot No. 5 & 6, Sec-3, Ghansoli (East), Navi Mumbai, Phone- 9892230623, Pincode : 400 701, Email : sdbpl@vsnl.com	

52	SIGHT FLOW INDICATORS	BLISS ANAND PVT. LTD.	Mr. Vikas Anand/ Mr.RGRajan 92B & 93 B , IMT MANESAR Gurgaon Phone- 0124-4366000 TO 9 Pincode : 122001 Email : sales@blissanand.com	Works-1->Mr. Bharat Kumar/ Mr. Sasi Kumar Plot No. 240, Sector-3, HSIIDC, Bawal -Rewari-HARYANA INDIA Phone- 0124-4366000 TO 9 FAX : 0124-2290884 Pincode : 123501 Email : bharat@blissanand.com
53	SIGHT FLOW INDICATORS	B.K.EQUIPMENTS PVT.LTD.	T. BALAKRISHNAN/S.VENKATESH 217 , ARCOT ROAD PORUR , CHENNAI Phone- 9444057761 Pincode : 600116 Email : bkequip@gmail.com	Works-1->V.KARUNANIDHI/P.BABU 217 , ARCOT ROAD,PORUR , -CHENNAI-TAMIL NADU INDIA Phone- 9444131187 FAX : 044-24766852 Pincode : 600116 Email : bkequip@gmail.com
54	SIGHT FLOW INDICATORS	SIGMA INSTRUMENTS CO.	Gopal Kannan/R Gopinath 201, ANANDRAJ INDUSTRIAL ESTATE, OFF.LBS MARG, SONAPUR LANE, BHANDUP (W) MUMBAI Phone- +919821038162 Pincode : 400078 Email : sales@sigmainstruments.co.in	Works-1->R Gopinath 27 Nahur Udyog Industrial Premises,M.M.Malviya Road, Mulund(-MUMBAI-MAHARASHTRA INDIA Phone- +912225918567 FAX : +912225918566 Pincode : 400080 Email : sales@sigmainstruments.co.in
55	SIGHT FLOW INDICATORS	INSTRUMENTATION ENGINEERS PVT LTD	SH.N.V.RAM GOPAL/MS. N.NIHARIKA PLOTS 1,2,3, PHASE-III, IDA, JEEDIMETLA HYDERABAD Phone- 9848407365 Pincode : 500055 Email : iedelhi@ieflowmeters.com	Works-1->MR. A.V.MURTHY/MR. K.T. RAVISANKER PLOTS 1,2,3, PHASE-III,IDA, JEEDIMETLA -HYDERABAD-TELANGANA INDIA Phone- 9885107312 FAX : 040-23096401 Pincode : 500055 Email : sales@ieflowmeters.com
56	DIFFERENTIAL PRESSURE SWITCH	SOR INC.	LARRY DEGARMO/Avdhesh Chandra, 14685 W. 105TH STREET LENEXA Phone- 09810905139, Pincode : 66215 Email : Ldegarmo@sorinc.com, avdhesh@sherman-india.com	
57	JUNCTION BOX	K.S.INSTRUMENTS PVT.LTD.	S Raghavan No. 72, 3rd Main, 1st Stage Industrial Suburb, Yeshwanthpur Bangalore Phone- 9880385770 Pincode : 560022 Email : sales1@ksinstruments.net	
58	JUNCTION BOX	SUCHITRA INDUSTRIES	NO-2,OPP-27 AECS LAYOUT 2ND STG REJAMAHALVILAS EXTN 2ND STG BANGALORE Phone- Pincode : Email : suchitra.industriesblr@gmail.com	Works-1->B. Srinivas Suchitra Industries, Opp No 53, Muneshwara Black Devinagar, Lottagal hal -BANGALORE-KARNATAKA INDIA Phone- 080-23511247 FAX : Pincode : 560094 Email : suchitra_industries@yahoo.com
59	JUNCTION BOX	FLEXPRO ELECTRICALS PVT. LTD.	Mr. Dineshbhai Zaveri C-1/ 27&37, GIDC, Kabilpore, Navsari Phone- 02637-265140,265003 Pincode : 396424 Email : flexpro@flexproltd.com	Works-1->Mr. Dineshbhai Zaveri CEO C-1/ 27&37, GIDC, Kabilpore, -Navsari-GUJARAT INDIA Phone- 02637-265140,265003 FAX : 02637-265308 Pincode : 396424 Email : flexpro@flexproltd.com
60	JUNCTION BOX	Shrenik & Company,	Mr. Mitesh Shah/Mr. Pulin Shah 39 A/3 ,Panchratna Industrial Estate, Sarkhej-Bavla Road Ahmedabad Phone- 9825024921 Pincode : 382213 Email : sales@pustron.com, pulin@sumip.com	Works-1->Mr.Pulin Shah/ Mr. Kaloesh Parmar 39 A/3 ,Panchratna Industrial Est,Sarkhej-Bavla Road, Changodhar -Ahmedabad-GUJARAT INDIA Phone- 98250 80339 1 FAX : 079-26932424 Pincode : 382213 Email : sales@sumip.com
61	JUNCTION BOX	AJMERA INDUSTRIAL & ENGINEERING WORKS	JIGNESH MAHENDRA AJMERA DENA BANK BLDG.,SHREE NAGESH INDL. ESTATE,STATION ROAD, MUMBAI Phone- 022 67973578 Pincode : 400 088 Email : ajmera@ajmera.net, jmajmera@yahoo.com	Works-1->JIGNESH MAHENDRA AJMERA DENA BANK BLDG., SHREE NAGESHINDL. ESTATE,STATION ROAD, -MUMBAI-MAHARASHTRA INDIA Phone- 022 67973578 FAX : Pincode : 400 088 Email : ajmera@ajmera.net
62	INSTRUMENTS TUBE FITTINGS	VIKAS INDUSTRIAL PRODUCTS	S.R.SINGH/NAVEEN SINGH B - 2, SECTOR - 6, NOIDA Phone- +91-9810122070 Pincode : 201301 Email : naveensingh@vsnl.com	Works-1->S.R.SINGH/ NAVEEN SINGH B - 2, SECTOR - 6, -NOIDA-UTTAR PRADESH INDIA Phone- 0120-4352940 FAX : 0120-4352940 Pincode : 201301 Email : naveensingh@vsnl.com
63	INSTRUMENTS TUBE FITTINGS	AURA INCORPORATED	NIRAJ SHARAN/SUJIT KUMAR W-167A, GREATER KAILASH-II NEW DELHI Phone- 9810182430 Pincode : 110048 Email : niraj@aurainc.com	
64	INSTRUMENTS TUBE FITTINGS	PRECISION ENGINEERING INDUSTRIES	K. SITARAM/ K. SRINIVAS 7,SIDHAPURA INDUSTRIAL ESTATE S.V. ROAD,GOREGAON(W) MUMBAI Phone- 022 42631700 Pincode : 400 062 Email : peiks@vsnl.com	Works-1->ALEX BAPTIST/ K. SRINIVAS 7. SIDHAPURA INDUSTRIAL ESTATE,SV ROAD, GOREGAON(WEST) -MUMBAI-MAHARASHTRA INDIA Phone- 022-42631700 FAX : 022-40035259 Pincode : 400 062 Email : srinivas@precision-engg.com

65	INSTRUMENTS TUBE FITTINGS	Fluid Controls Pvt. Ltd.	Sophie Y. Moochhala/Mayur Rajput J.V.PATEL, I.T.I CMPD, B.MADHUKAR MARG, ELPHINSTONE ROADSTN.(WR), MUMBAI Phone- (022) 43338000 Pincode : 400013 Email : sales@fluidcontrols.com	Works-1->Mr. Tansen Choudhari/Mr. Mahesh Darekar Shed No.8, Lonavla Indl.Co-op.Estate Ltd,Nagargaon, -Lonavla-MAHARASHTRA INDIA Phone- 9823951347 FAX : (02114) 271132 Pincode : 410 401 Email : factory@hyd-air.com
66	LEVEL SWITCH-CAPACITANCE TYPE	SIGMA INSTRUMENTS CO.	Gopal Kannan/R Gopinath 201, ANANDRAJ INDUSTRIAL ESTATE, OFF.LBS MARG, SONAPUR LANE, BHANDUP (W) MUMBAI Phone- +919821038162 Pincode : 400078 Email : sales@sigmainstruments.co.in	Works-1->R Gopinath 27 Nahur Udyog Industrial Premises,M.M.Malviya Road, Mulund(-MUMBAI-MAHARASHTRA INDIA Phone- +912225918567 FAX : +912225918566 Pincode : 400080 Email : sales@sigmainstruments.co.in
67	LEVEL SWITCH-CAPACITANCE TYPE	V. AUTOMAT & INTRUMENTS (P) LTD.	Mr. R. K. BASSI/Mr. PRAVEEN KUMAR F-61, OKHLA INDL.AREA, PH-1 NEW DELHI Phone- 9810005826 Pincode : 110 020 Email : sales@vautomat.com	Works-1->Mr. BHAGWAN SINGH/ Mr. NANDAN SINGH F-61, OKHLA INDL.AREA,PHASE-I -NEW DELHI-DELHI INDIA Phone- 011-47627200 Extn. 3 FAX : 011- 26819440 Pincode : 110 020 Email : production@vautomat.com
68	LEVEL SWITCH-CAPACITANCE TYPE	SCIENTIFIC DEVICES (BOMBAY) PVT LTD,	Office no. 53, Shree Manoshi Complex, Plot No. 5 & 6, Sec-3, Ghansoli (East), Navi Mumbai, Phone- 9892230623, Pincode : 400 701, Email : sdbpl@vsnl.com	Works-1->Scientific Center, Others By-Pass Junction,Near Kalsekar College kausa, mumbra,Thane -Mumbai-MAHARASHTRA INDIA Phone- 022-25491409,9892230623 FAX : Pincode : 400612 Email : sdbpl@vsnl.com
69	LEVEL SWITCH-CAPACITANCE TYPE	Pune Techtrol Pvt. Ltd.	N.P.Khatan/Sudhakar Badiger S-18, MIDC Bhosari, Pune Phone- 9850560042 Pincode : 411 026 Email : ho@punetechtrol.com	
70	LEVEL SWITCH-CAPACITANCE TYPE	LEVCON INSTRUMENTS PVT. LTD.	Mr Shayak Gupta/Badal Jana Rajkamal', 7th floor, 13, Camac Street KOLKATA Phone- 0 33 2283 2766 Pincode : 700017 Email : b_jana@levcongroup.com	
71	LEVEL SWITCH-CAPACITANCE TYPE	Baumer Technologies India Pvt. Ltd.	Mr. Shyam Warilani/Mr. V Suresh Babu 36, DAMJI SHAMJI INDUSTRIAL COMPLEX, OFF.-MAHAKALI CAVES ROAD, ANDHERI(E) MUMBAI Phone- +91 99589 25151 Pincode : 400093 Email : sales.in@baumer.com	Works-1->Mr. Shyam Warilani/Mr. V Suresh Babu Plot No 34 À GIDC À Phase 1, -VAPI-GUJARAT INDIA Phone- +91 11 4161 7111 FAX : 022 2687 3613 Pincode : 396 195 Email : pbajaj@baumer.com
72	LEVEL SWITCH-CONDUTIVITY TYPE	Sapcon Instrument Pvt Ltd.	131, PALSHIKAR COLONY Contact Person- Mr. Ashwin (9826080207) INDORE Phone- +91-731-4085751, Pincode : 452004 Email : sales@sapconinstruments.com	Works-1->Mr. Ashwin R Palshikar/Mr. Navin Bodse 131 PALSHIKAR COLONY, -INDORE-MADHYA PRADESH INDIA Phone- 9754261005 FAX : 0731-2475475 Pincode : 452004 Email : sales@sapcon.in
73	LEVEL SWITCH-CONDUTIVITY TYPE	LEVCON INSTRUMENTS PVT. LTD.	Mr Shayak Gupta/Badal Jana Rajkamal', 7th floor, 13, Camac Street KOLKATA Phone- 0 33 2283 2766 Pincode : 700017 Email : b_jana@levcongroup.com	Works-1-> 38G, PICNIC GARDEN ROAD, -KOLKATA-WEST BENGAL INDIA Phone- FAX : Pincode : Email :
74	LEVEL SWITCH-CONDUTIVITY TYPE	BLISS ANAND PVT. LTD.	Mr. Vikas Anand/ Mr.RGRajan 92B & 93 B , IMT MANESAR Gurgaon Phone- 0124-4366000 TO 9 Pincode : 122001 Email : sales@blissanand.com	Works-1->Mr. Bharat Kumar/ Mr. Sasi Kumar Plot No. 92B & 93B,Sec-V, IMTManesar -GURGAON-HARYANA INDIA Phone- 0124-4366000 TO 9 FAX : 0124-2290884 Pincode : 122002 Email : bharat@blissanand .com
75	LEVEL SWITCH-CONDUTIVITY TYPE	V. AUTOMAT & INTRUMENTS (P) LTD.	Mr. R. K. BASSI/Mr. PRAVEEN KUMAR F-61, OKHLA INDL.AREA, PH-1 NEW DELHI Phone- 9810005826 Pincode : 110 020 Email : sales@vautomat.com	Works-1->Mr. BHAGWAN SINGH/ Mr. NANDAN SINGH F-61, OKHLA INDL.AREA,PHASE-I -NEW DELHI-DELHI INDIA Phone- 011-47627200 Extn. 3 FAX : 011- 26819440 Pincode : 110 020 Email : production@vautomat.com
76	LEVEL SWITCH-CONDUTIVITY TYPE	HI-TECH SYSTEMS & SERVICES LTD.	Mr. Vikash Agrawal/Mr. Tarun Debnath 119, PARK STREET , KOLKATA Phone- 033-22290045 Pincode : 700016 Email : sandeep@hitech.in	Works-1->Mr. Jitendra Kumar/Mr. Debasis Dey 82/1, Sarsuna Main Road, -KOLKATA-WEST BENGAL INDIA Phone- 9883994030 FAX : Pincode : 700061 Email : jitendra@hitech.in
77	LEVEL SWITCH-CONDUTIVITY TYPE	RAMAN INSTRUMENTS PVT.LTD.	Mr. N R Shenoy/Mr G B Vijh 8, First Floor.Plot : 160A Bait-Ush-Sharaf, 29th Road,Bandra(W) MUMBAI Phone- 09892331381 Pincode : 400050 Email : ramanbpl@vsnl.com	Works-1->NA -- Phone- FAX : Pincode : Email :

78	LEVEL SWITCH-CONDUTIVITY TYPE	SIGMA INSTRUMENTS CO.	Gopal Kannan/R Gopinath 201, ANANDRAJ INDUSTRIAL ESTATE, OFF.LBS MARG, SONAPUR LANE, BHANDUP (W) MUMBAI Phone- +919821038162 Pincode : 400078 Email : sales@sigmainstruments.co.in	Works-1->R Gopinath 27 Nahur Udyog Industrial Premises,M.M.Malviya Road, Mulund(-MUMBAI-MAHARASHTRA INDIA Phone- +912225918567 FAX : +912225918566 Pincode : 400080 Email : sales@sigmainstruments.co.in
79	LEVEL SWITCH-CONDUTIVITY TYPE	SOR INC.	LARRY DEGARMO/Avdhesh Chandra, 14685 W. 105TH STREET LENEXA Phone- 09810905139, Pincode : 66215 Email : Ldegarmo@sorinc.com, avdhesh@sherman-india.com	Works-1->LARRY DEGARMO/ ROY STUMBOUGH 14685 W. 105TH STREET, LENEXA -KANSAS- USA Phone- 913-888-0767 FAX : 913-888-0767 Pincode : 66215 Email : rstumbough@sorinc.com
80	LEVEL SWITCH-FLOAT TYPE	Pune Techtrol Pvt. Ltd.	N.P.Khatan/Sudhakar Badiger S-18, MIDC Bhosari, Pune Phone- 9850560042 Pincode : 411 026 Email : ho@punetechtrol.com	
81	LEVEL SWITCH-FLOAT TYPE	D.K. INSTRUMENTS PVT.LTD.	N.SIKDAR/ SUMIT SIKDAR 76/2,SELIMPUR RD DHAKURIA Kolkata Phone- 033-2415-1310. Pincode : 700031 Email : dkinst@vsnl.net	
82	LEVEL SWITCH-FLOAT TYPE	V. AUTOMAT & INTRUMENTS (P) LTD.	Mr. R. K. BASSI/Mr. PRAVEEN KUMAR F-61, OKHLA INDL.AREA, PH-1 NEW DELHI Phone- 9810005826 Pincode : 110 020 Email : sales@vautomat.com	Works-1->Mr. BHAGWAN SINGH/ Mr. NANDAN SINGH F-61, OKHLA INDL.AREA,PHASE-I -NEW DELHI-DELHI INDIA Phone- 011-47627200 Extn. 3 FAX : 011- 26819440 Pincode : 110 020 Email : production@vautomat.com
83	LEVEL SWITCH-FLOAT TYPE	SCIENTIFIC DEVICES (BOMBAY) PVT LTD,	Office no. 53, Shree Manoshi Complex, Plot No. 5 & 6, Sec-3, Ghansoli (East), Navi Mumbai, Phone- 9892230623, Pincode : 400 701, Email : sdbpl@vsnl.com	Works-1->Scientific Center, Others By-Pass Junction,Near Kalsekar College kausa, mumbra,Thane -Mumbai-MAHARASHTRA INDIA Phone- 022-25491409,9892230623 FAX : Pincode : 400612 Email : sdbpl@vsnl.com
84	LEVEL SWITCH-FLOAT TYPE	LEVCON INSTRUMENTS PVT. LTD.	Mr Shayak Gupta/Badal Jana Rajkamal', 7th floor, 13, Camac Street KOLKATA Phone- 0 33 2283 2766 Pincode : 700017 Email : b_jana@levcongroup.com	
85	LEVEL SWITCH-FLOAT TYPE	GENERAL INSTRUMENTS CONSORTIUM	Mr. Amarendra Kulkarni 194/195, Gopi Tank Road, Off. Pandurang Naik Marg, Mahim Mumbai Phone- 9323195251 Pincode : 400016 Email : amarendra@general-gauges.com	
86	LEVEL SWITCH-FLOAT TYPE	SBEM PVT. LTD.	MR.N.K. BEDARKAR/MR. VISHWANATH KARANDIK 39, ELECTRONIC CO.OP. ESTATE, PUNE SATARA ROAD PUNE, Phone- 912041030100 Pincode : 411009 Email : newdelhi@sbem.co.in	Works-1->MR. MOHAN PADWAL 691/A/2,BIBWEWADI INDL ESTATE -PUNE-MAHARASHTRA INDIA Phone- 918600042374 FAX : 912024215670 Pincode : 411037 Email : wm@sbem.co.in
87	LEVEL SWITCH-FLOAT TYPE	Baumer Technologies India Pvt. Ltd.	Mr. Shyam Warilani/Mr. V Suresh Babu 36, DAMJI SHAMJI INDUSTRIAL COMPLEX, OFF.-MAHAKALI CAVES ROAD, ANDHERI(E) MUMBAI Phone- +91 99589 25151 Pincode : 400093 Email : sales.in@baumer.com	Works-1->Mr. Shyam Warilani/Mr. V Suresh Babu Plot No 34 À GIDC À Phase 1, -VAPI-GUJARAT INDIA Phone- +91 11 4161 7111 FAX : 022 2687 3613 Pincode : 396 195 Email : pbajaj@baumer.com
88	LEVEL SWITCH-FLOAT TYPE	SIGMA INSTRUMENTS CO.	Gopal Kannan/R Gopinath 201, ANANDRAJ INDUSTRIAL ESTATE, OFF.LBS MARG, SONAPUR LANE, BHANDUP (W) MUMBAI Phone- +919821038162 Pincode : 400078 Email : sales@sigmainstruments.co.in	Works-1->R Gopinath 27 Nahur Udyog Industrial Premises,M.M.Malviya Road, Mulund(-MUMBAI-MAHARASHTRA INDIA Phone- +912225918567 FAX : +912225918566 Pincode : 400080 Email : sales@sigmainstruments.co.in
89	LEVEL SWITCH-FLOAT TYPE	SOR INC.	LARRY DEGARMO/Avdhesh Chandra, 14685 W. 105TH STREET LENEXA Phone- 09810905139, Pincode : 66215 Email : Ldegarmo@sorinc.com, avdhesh@sherman-india.com	Works-1->LARRY DEGARMO/ ROY STUMBOUGH 14685 W. 105TH STREET, LENEXA -KANSAS- USA Phone- 913-888-0767 FAX : 913-888-0767 Pincode : 66215 Email : rstumbough@sorinc.com
90	INSTRUMENTS PIPE FITTINGS	PRECISION ENGINEERING INDUSTRIES	K. SITARAM/ K. SRINIVAS 7,SIDHAPURA INDUSTRIAL ESTATE S.V. ROAD,GOREGAON(W) MUMBAI Phone- 022 42631700 Pincode : 400 062 Email : peiks@vsnl.com	Works-1->ALEX BAPTIST/ K. SRINIVAS 7. SIDHAPURA INDUSTRIAL ESTATE,SV ROAD, GOREGAON(WEST) -MUMBAI-MAHARASHTRA INDIA Phone- 022-42631700 FAX : 022-40035259 Pincode : 400 062 Email : [illegible]

91	INSTRUMENTS PIPE FITTINGS	AURA INCORPORATED	NIRAJ SHARAN/SUJIT KUMAR W-167A, GREATER KAILASH-II NEW DELHI Phone- 9810182430 Pincode : 110048 Email : niraj@aurainc.com	
92	INSTRUMENTS PIPE FITTINGS	VIKAS INDUSTRIAL PRODUCTS	S.R.SINGH/NAVEEN SINGH B - 2, SECTOR - 6, NOIDA Phone- +91-9810122070 Pincode : 201301 Email : naveensingh@vsnl.com	Works-1->S.R.SINGH/ NAVEEN SINGH B - 2, SECTOR - 6, -NOIDA-UTTAR PRADESH INDIA Phone- 0120-4352940 FAX : 0120-4352940 Pincode : 201301 Email : naveensingh@vsnl.com
93	INSTRUMENTS PIPE FITTINGS	Fluid Controls Pvt. Ltd.	Sophie Y. Moochhala/Mayur Rajput J.V.PATEL, I.T.I CMPD, B.MADHUKAR MARG, ELPHINSTONE ROADSTN.(WR), MUMBAI Phone- (022) 43338000 Pincode : 400013 Email : sales@fluidcontrols.com	Works-1->Mr. Tansen Choudhari/Mr. Mahesh Darekar Shed No.8, Lonavla Indl.Co-op.Estate Ltd,Nagargaon, -Lonavla-MAHARASHTRA INDIA Phone- 9823951347 FAX : (02114) 271132 Pincode : 410 401 Email : factory@hyd-air.com
94	INSTRUMENT FITTINGS	HP VALVES & FITTINGS INDIA PVT. LTD.	S. Harichandran/P.S. Pandi B-11, Mugappair Industrial Estate, CHENNAI Phone- 044 26252537 Pincode : 600037 Email : sales@hpvalvesindia.com	Works-1->S. Harichandran/ P.S. Pandi B-11, Mugappair Industrial Estate, -CHENNAI-TAMIL NADU INDIA Phone- 044-25252537 FAX : 044-26252538 Pincode : 600037 Email : sales@hpvalvesindia.com
95	INSTRUMENT FITTINGS	Perfect Instrumentation Control (India) Pvt. Ltd.	MD Hussain Shaikh/Shahanawaz Khan Gala No. 168, Loheki Chwal,216/ 218, Maulana Azad Rd. Nagpada Junction Mumbai Phone- 91-9324383121 Pincode : 400008 Email : shahanawaz.khan@perfectinstrumentation.com	Works-1->Shahanawaz Khan Vishweshwar Ind. Premises Co-op Soc. Ltd,F-18/19, Pradhikaran,Bhosadi MIDC -PUNE-MAHARASHTRA INDIA Phone- 020-30694134 FAX : 022-23013010 Pincode : 411026 Email : shahanawaz.khan@perfectinstrumentation.com
96	INSTRUMENT FITTINGS	Comfit & Valve Pvt. Ltd.	Mr. Jeetu Jain/Mr. Vinay Sosa Survey No. 23/1, Part 2, Ahmedabad-Mehsana Highway Laxmipura, Nandasan Phone- 02764-267036/37 Pincode : 382705 Email : marketing@com-fit.com	Works-1->Miss Sonal Pithadia/Miss Pavan Chavda Survey No. 23/1, Part 2, Ahmedabad-Mehsana Highway, Laxmipura -Nandasan-GUJARAT INDIA Phone- 8460848087 FAX : 2764-267036/37 Pincode : 382705 Email : domestic@com-fit.com
97	INSTRUMENT FITTINGS	Arya Crafts & Engineering Pvt. Ltd.	Mr.Sanjay Brahman/Mr.Shyam Vazirani 102, Vora Industrial Estate No.4 Navghar, Vasai Road (E) Dist.Thane, Mumbai Phone- +91-250-2392246 Pincode : 401210 Email : arya@aryaengg.com	
98	INSTRUMENT FITTINGS	FLUIDFIT ENGINEERS PVT. LTD.	Mr. Abbas Bhola Potia Building No. 2, Office No. 3,292, Bellasis Road,Mumbai Central (East) Mumbai Phone- 9920044113 Pincode : 400008 Email : ab@fluidfitengg.com	Works-1->Mr. Abbas Bhola Unit No. 16, Supreme Industrial Estate,Kaman Bhiwandi Road,Devdal, -Vasai East-MAHARASHTRA India Phone- 9920044113 FAX : 07303178243 Pincode : 401208 Email : ab@fluidfitengg.com
99	INSTRUMENT FITTINGS	VIKAS INDUSTRIAL PRODUCTS	S.R.SINGH/NAVEEN SINGH B - 2, SECTOR - 6, NOIDA Phone- +91-9810122070 Pincode : 201301 Email : naveensingh@vsnl.com	Works-1->S.R.SINGH/ NAVEEN SINGH B - 2, SECTOR - 6, -NOIDA-UTTAR PRADESH INDIA Phone- 0120-4352940 FAX : 0120-4352940 Pincode : 201301 Email : naveensingh@vsnl.com
100	INSTRUMENT FITTINGS	Fluid Controls Pvt. Ltd.	Sophie Y. Moochhala/Mayur Rajput J.V.PATEL, I.T.I CMPD, B.MADHUKAR MARG, ELPHINSTONE ROADSTN.(WR), MUMBAI Phone- (022) 43338000 Pincode : 400013 Email : sales@fluidcontrols.com	Works-1->Mr. Tansen Choudhari/Mr. Mahesh Darekar Shed No.8, Lonavla Indl.Co-op.Estate Ltd,Nagargaon, -Lonavla-MAHARASHTRA INDIA Phone- 9823951347 FAX : (02114) 271132 Pincode : 410 401 Email : factory@hyd-air.com
101	INSTRUMENT FITTINGS	PANAM ENGINEERS	Mr. Santosh Shukla 203, Jaisingh Business,Parsiwada, Sahar road,Andheri(East), Mumbai, Phone- 9892179529, Pincode : 400099, Email : santosh@panamengineers.com	Works-1->Mr. Santosh Shukla Others R-628,TTC Industrial Area, MIDC Rabale, -Navi Mumbai-MAHARASHTRA India Phone- 9821350761, FAX : 022-27695559, Pincode : 400701, Email : sales@panamengineers.com
102	INSTRUMENT FITTINGS	AURA INCORPORATED	NIRAJ SHARAN/SUJIT KUMAR W-167A, GREATER KAILASH-II NEW DELHI Phone- 9810182430 Pincode : 110048 Email : niraj@aurainc.com	
103	INSTRUMENT FITTINGS	PRECISION ENGINEERING INDUSTRIES	K. SITARAM/ K. SRINIVAS 7,SIDHAPURA INDUSTRIAL ESTATE S.V. ROAD,GOREGAON(W) MUMBAI Phone- 022 42631700 Pincode : 400 062 Email : peiks@vsnl.com	Works-1->ALEX BAPTIST/ K. SRINIVAS 7. SIDHAPURA INDUSTRIAL ESTATE,SV ROAD, GOREGAON(WEST) -MUMBAI-MAHARASHTRA INDIA Phone- 022-42631700 FAX : 022-40035259 Pincode : 400 062 Email : srinivas@precision-india.com