FIRST ANGLE PROJECTION

(ALL DIMENSIONS ARE IN mm)

DRG NO 1 180 005 7756

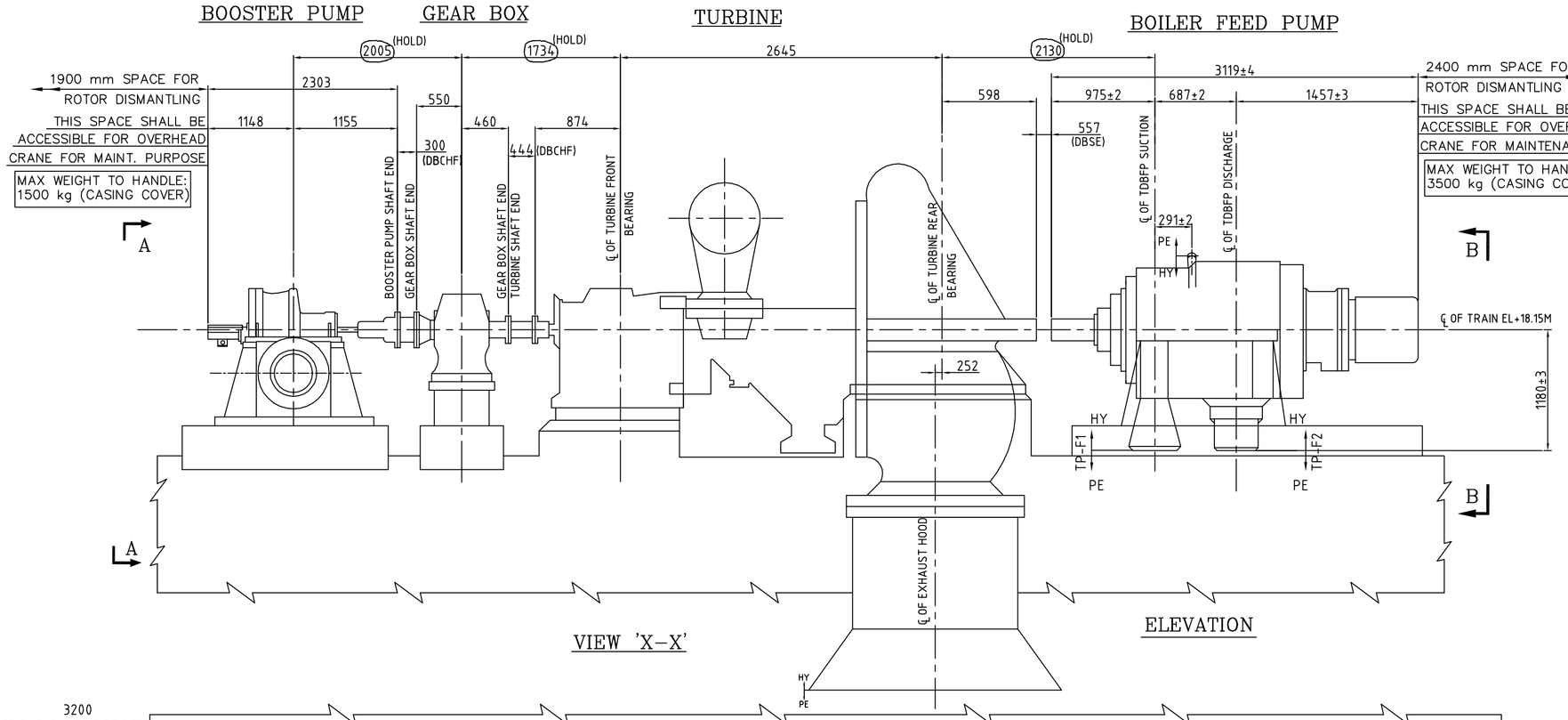

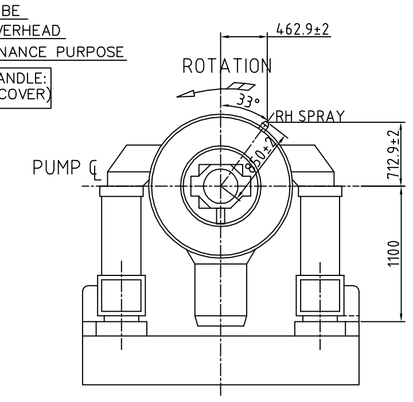

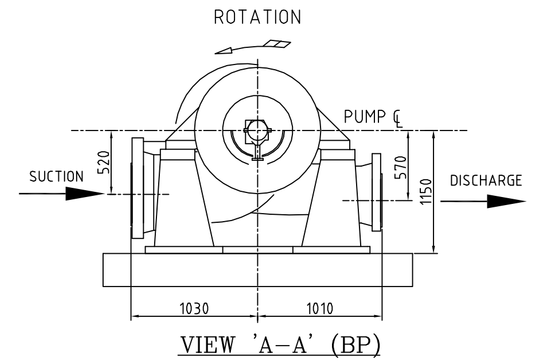

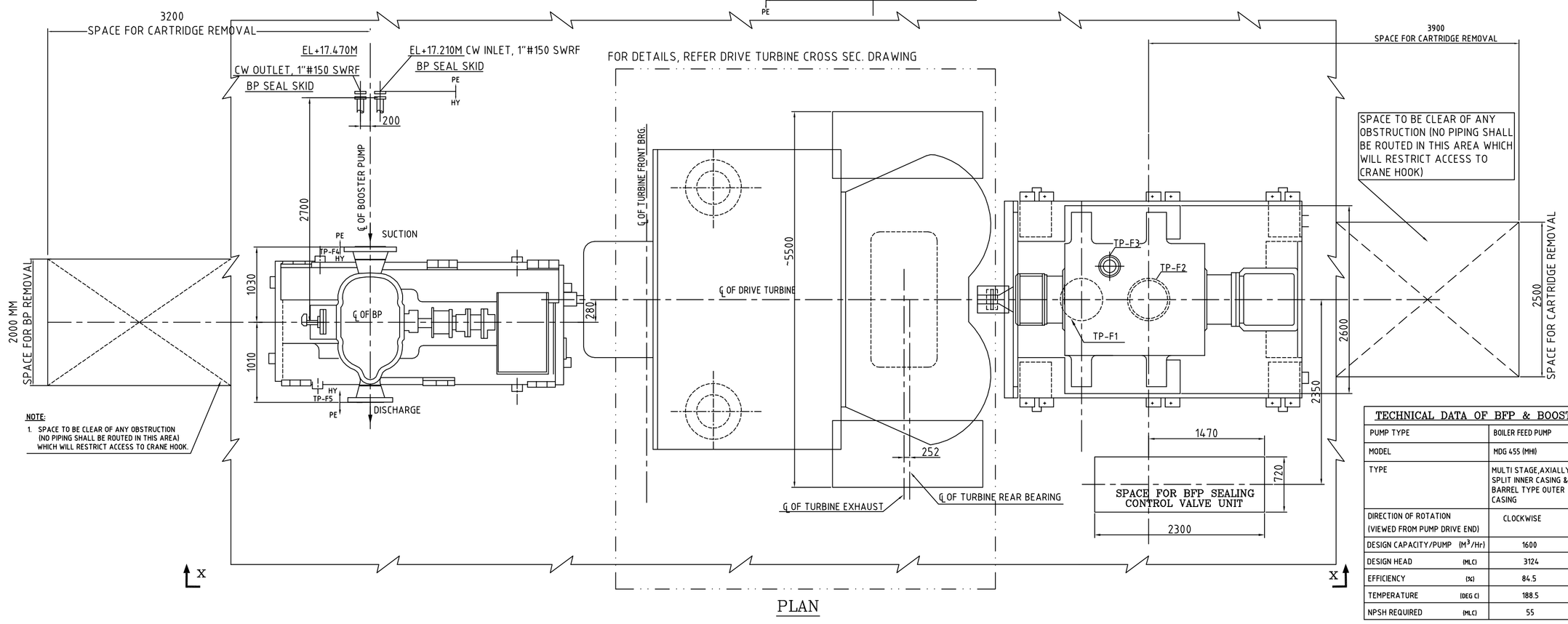

TERMINAL POINTS

TERMINAL POINT	DESCRIPTION	SIZE INCHES	TERMINATED WITH	QTY
TP-F1	SUCTION OF FEED PUMP	16	400 A BW	1
TP-F2	DISCHARGE OF FEED PUMP	18	450A BW	1
TP-F3	R.H.SPRAY	3	ASME 1500Lb-80A RJ	1
TP-F4	SUCTION OF BOOSTER PUMP	18	ASME 600Lb-450A	1
TP-F5	DISCHARGE OF BOOSTER PUMP	14	ASME 600Lb-350A	1

STATIC & DYNAMIC LOADS FOR BP & BFP

		BOOSTER PUMP	BFP
STATIC LOAD (kg)	VERTICAL	9000	26000
DYNAMIC LOAD (kg)	VERTICAL	8850	28650
	HORIZONTAL	8850	28650
	AXIAL	5900	19100

WEIGHTS OF PUMPS

ITEM	BOILER FEED PUMP		BOOSTER PUMP	
	DRY (kg)	WET (kg)	DRY (kg)	WET (kg)
PUMP	18800	19100	5400	5900
BASE	6900	6900	3100	3100
TOTAL	25700	26000	8500	9000

WEIGHTS OF TURBINE & GEAR BOX

ITEM	WEIGHT
DRIVE TURBINE	65000
GEAR BOX TOTAL WT	1300
GEAR BOX HIGH SPEED SHAFT	200
GEAR BOX LOW SPEED SHAFT	500

WEIGHTS OF SINGLE HEAVIEST PIECE FOR

	ERECTION (kg)	MAINTENANCE (kg)
DRIVE TURBINE	65000	24000
BFP	25700	3500
BOOSTER PUMP	8500	1500

TECHNICAL DATA OF BFP & BOOSTER PUMP

PUMP TYPE	BOILER FEED PUMP	BOOSTER PUMP
MODEL	MDG 455 (MHI)	MLC 450X350 H (MHI)
TYPE	MULTI STAGE,AXIALLY SPLIT INNER CASING & BARREL TYPE OUTER CASING	SINGLE STAGE RADIALLY SPLIT TYPE
DIRECTION OF ROTATION (VIEWED FROM PUMP DRIVE END)	CLOCKWISE	CLOCKWISE
DESIGN CAPACITY/PUMP (M^3/Hr)	1600	1600
DESIGN HEAD (MLC)	3124	246
EFFICIENCY (%)	84.5	81
TEMPERATURE (DEG C)	188.5	188.5
NPSH REQUIRED (MLC)	55	8.3

SCOPE OF SUPPLY	HY BHEL, HYD SCOPE PE BHEL, PEM SCOPE

NOTE:

1. TERMINAL POINTS SHOWN IN THE HYD. SCOPE INCLUDES COUNTER FLANGES ALONG WITH FASTENERS & GASKETS.
2. REFER TDBFP SET FOUND. DRG. HY-DG-1-31301-15635 FOR THE FOLLOWING:
   i) LOADING POINTS & LOADING DETAILS
   ii) FOUNDATION DETAILS AND ELEVATION OF TURBINE AND PUMPS
   iii) KEY PLAN
3. FOR KEY PLAN OF DT LUBE OIL EQUIPMENT REFER PLOT PLAN (TDBFP LUBE OIL EQUIPMENT LAYOUT) DRG NO. HY-DG-0-31301-15601.
4. THIS DRG IS VALID FOR TDBFP-A& TDBFP-B
5. ALL ELEVATIONS ARE WITH RESPECT TO EL(+)0.00 m, FINISHED GROUND FLOOR LEVEL OF TG BUILDING AND MILL BAY WHICH CORRESPONDS TO RL.4m ABOVE MSL.

STATUS: PRELIMINARY

REV	STATUS	TYPE	REASONS FOR REVISION	PREPARED BY	CHECKED BY	APPROVED BY	DATE

ANDHRA PRADESH POWER DEVELOPMENT COMPANY LIMITED (APPDCL)

1x800 MW SDSTPS, STAGE –II, UNIT–3, KRISHNAPATNAM

BTG PKG

APPENCO DEVELOPMENT CONSULTANTS PVT. LTD.

BHARAT HEAVY ELECTRICALS LTD
HYDERABAD

DRAWING	NAME	SIGN	DATE
PREP. BY	SANGEETHA	–SD/–	26.02.2016
CHKD. BY	SANGEETHA	–SD/–	26.02.2016
APPD. BY	AVINASH		26.02.2016

TITLE: GENERAL ARRANGEMENT OF TDBFP–A & B SET

BHEL DRG. NO.: HY-DG-1-18000-57756

REV. NO. 00

SHEET NO. 01 NO OF SHEETS 01

THE INFORMATION ON THIS DOCUMENT IS THE PROPERTY OF BHARAT HEAVY ELECTRICALS LIMITED
IT MUST NOT BE USED DIRECTLY OR INDIRECTLY IN ANY WAY DETRIMENTAL TO THE INTEREST OF THE COMPANY

INVENTORY NO | SIGN AND DATE | COMP FILE NAME FP118000057756-00

FIRST ANGLE PROJECTION

(ALL DIMENSIONS ARE IN mm)

DRG. NO 1 180 005 7742

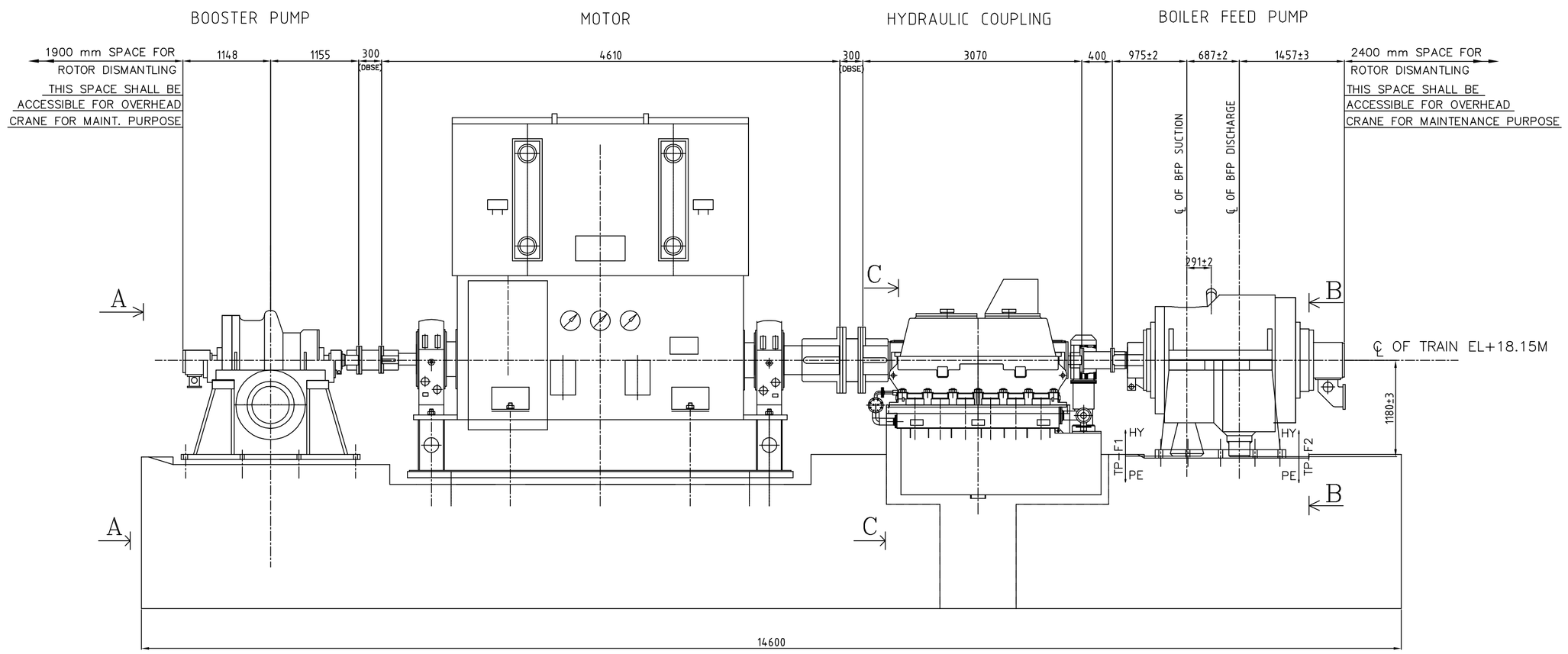

ELEVATION

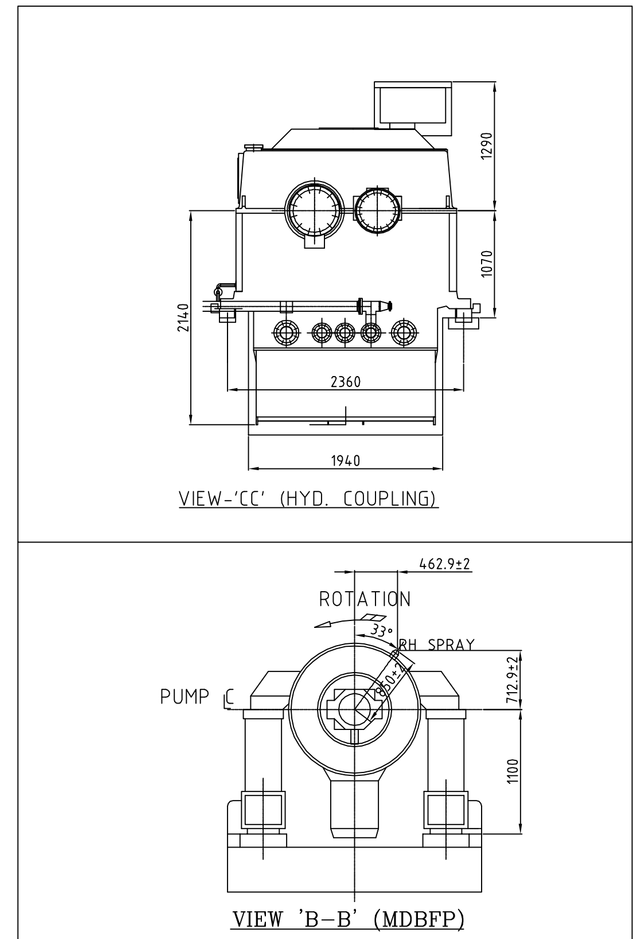

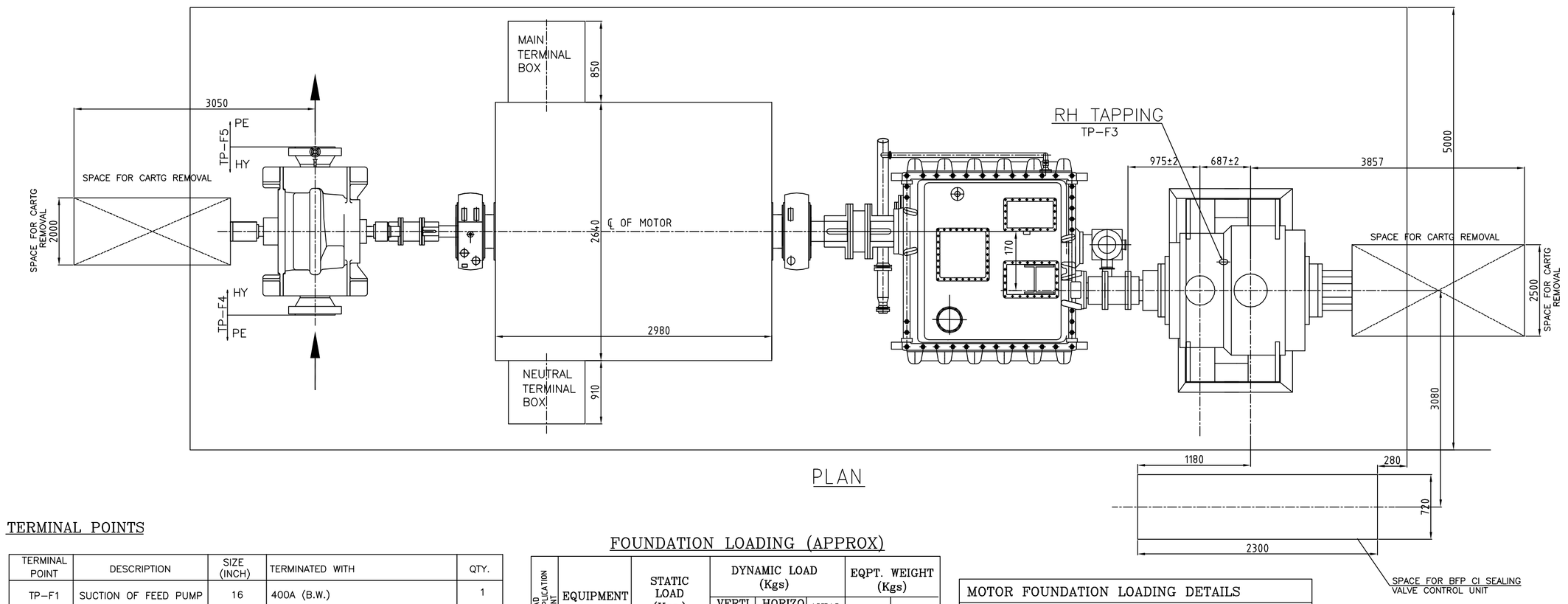

PLAN

SCOPE OF SUPPLY	HY BHEL HYDERABAD SCOPE PE BHEL PEM SCOPE

NOTE :

1. TERMINAL POINTS SHOWN IN THE HYD./MHI SCOPE INCLUDES COUNTER FLANGES ALONG WITH FASTENERS & GASKETS.
2. FOR LOADING POINTS & LOADS, REFER MDBFP FOUND. DRG.NO.: HY-DG-1-18000-57755

TERMINAL POINTS

TERMINAL POINT	DESCRIPTION	SIZE (INCH)	TERMINATED WITH	QTY.
TP-F1	SUCTION OF FEED PUMP	16	400A (B.W.)	1
TP-F2	DISCHARGE OF FEED PUMP	18	450A (B.W.)	1
TP-F3	R.H.SPRAY	3	ASME 1500 Lb-100A R.J.	1
TP-F4	SUCTION OF BOOSTER PUMP	18	ASME 600Lb-450A	1
TP-F5	DISCHARGE OF BOOSTER PUMP	14	ASME 600Lb-350A	1

FOUNDATION LOADING (APPROX)

LOAD APPLICATION POINT	EQUIPMENT	STATIC LOAD (Kgs.)	DYNAMIC LOAD (Kgs)			EQPT. WEIGHT (Kgs)	
			VERTICAL	HORIZONTAL	AXIAL	DRY	WET
1	BOILER FEED PUMP	26000	28650	28650	19100	25700	26000
2	BOOSTER PUMP	9000	8850	8850	5900	8500	9000
3	HYDRAULIC COUPLING	20800	2220	1320	---	17000	20800

MOTOR FOUNDATION LOADING DETAILS	
Reaction Due to Wt on Each Side (G)	= 209 KN
MAX Short circuit force (MS)	= 572 KN
Reaction Downward MS+G	= 781 KN
Reaction upward MS-G	= 363 KN

NOTE:
1-THE FORCES OCCUR ALTERNATELY INDEPENDENT OF THE DIRECTION OF ROTATION. (REFER LOADING ON FOUNDATION TABLE).
2-THE TRANSFER OF VIBRATIONS FROM SURROUNDING EQUIPMENT HAS TO BE AVOIDED BY SUITABLE LAYOUT OF FOUNDATION.
3-THE FIRST NATURAL FREQUENCY OF THE FOUNDATION AFTER ERRECTION OF THE MACHINE MUST DIFFER ATLEAST +25% & -20%, FROM ONE & TWO TIMES RUNNING SPEED FREQUENCIES & TWO TIMES THE ELECTRICAL FREQUENCY

STATUS: PRELIMINARY

REV	STATUS	TYPE	REASONS FOR REVISION	PREPARED BY	CHECKED BY	APPROVED BY	DATE

ANDHRA PRADESH POWER DEVELOPMENT COMPANY LIMITED (APPDCL)

1x800 MW SDSTPS, STAGE -II, UNIT-3, KRISHNAPATNAM

BTG PKG

DEVELOPMENT CONSULTANTS PVT. LTD.

BHARAT HEAVY ELECTRICALS LTD
HYDERABAD

	DRAWING NAME	SIGN	DATE
PREP. BY	SANGEETHA	-SD/-	26.02.2016
CHKD. BY	SANGEETHA	-SD/-	26.02.2016
APPD. BY	AVINASH		26.02.2016

TITLE: GENERAL ARRANGEMENT OF MDBFP SET

BHEL DRG. NO.: HY-DG-1-18000-57757

REV. NO. 00

SHEET NO. 01 | NO OF SHEETS 01

THE INFORMATION ON THIS DOCUMENT IS THE PROPERTY OF BHARAT HEAVY ELECTRICALS LIMITED. IT MUST NOT BE USED DIRECTLY OR INDIRECTLY IN ANY WAY DETRIMENTAL TO THE INTEREST OF THE COMPANY

INVENTORY NO | SIGN. AND DATE | COMP. FILE NAME FP118000057757-00

FIRST ANGLE PROJECTION

(ALL DIMENSIONS ARE IN mm)

DRG. NO. HY-DG-1-31301-15635 SH. 01 OF 03

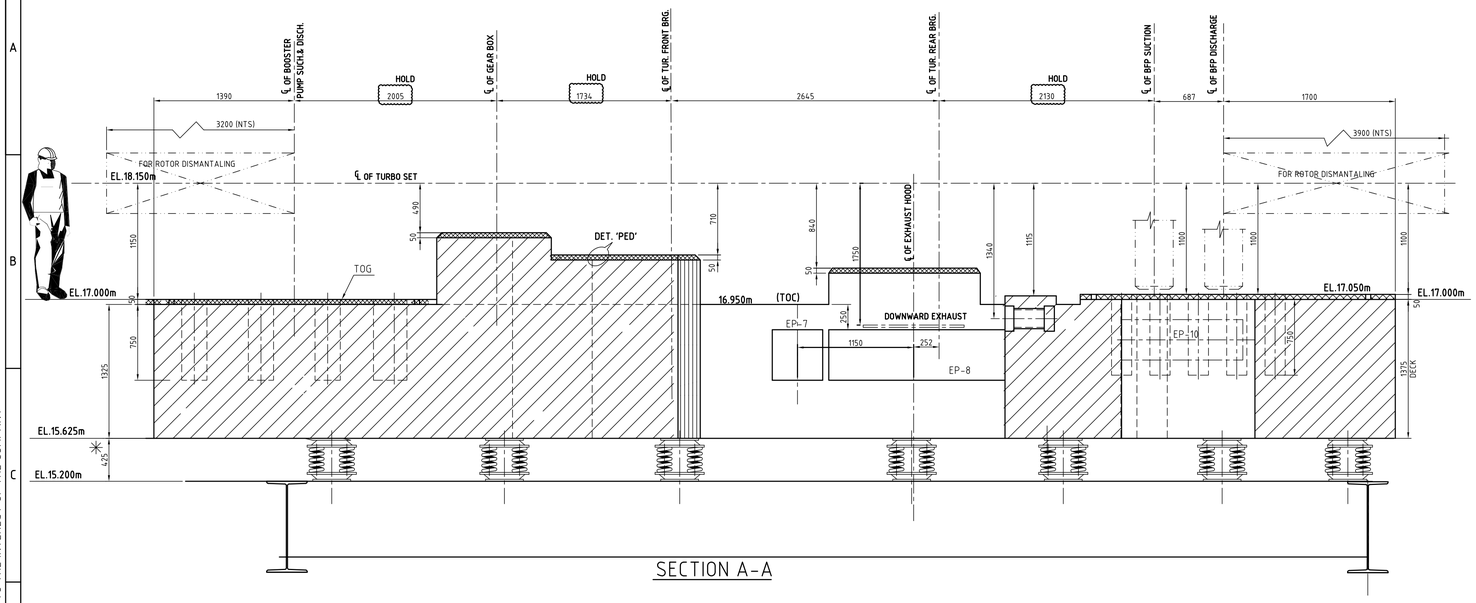

SECTION A-A

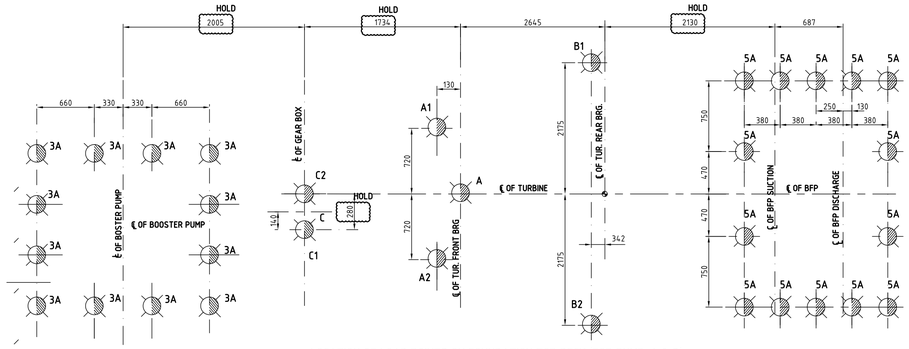

LOCATION OF LOAD POINTS ON FOUNDATION TOP DECK (FOR PUMP-A & B)

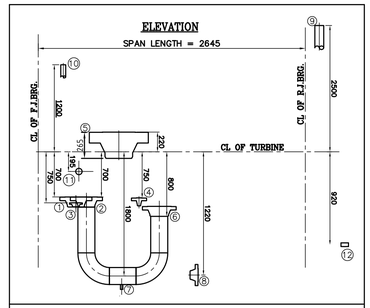

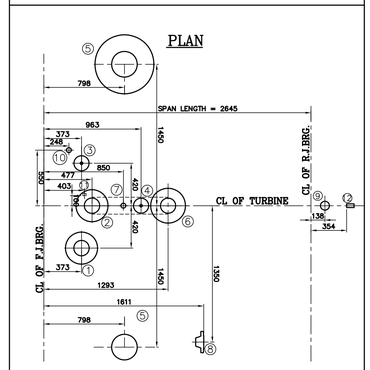

SUPPORT PLATES

DESIG.	PLATE SIZE	LOADS	QTY NO's	LOCATION
EP-1	800X300	3 T	2	BP SUCTION & ON BOTTOM OF THE DECK
EP-2	800X300	3 T	2	BP DISCHARGE & ON BOTTOM OF THE DECK
EP-3	300X300	1.5 T	1	STEAM TO BFPT & ON BOTTOM OF THE DECK
EP-4	300X300	1.5 T	1	STEAM TO BFPT & ON BOTTOM OF THE DECK
EP-5	1270X300	10 T	2	TDBFP SUCTION /DISCHARGE ON BOTTOM OF THE DECK
EP-6	300X300	1 T	2	RH SPRAY ON TOP
EP-7	500 X 500	4.5 T	6	VERTICAL SIDE OF DECK (CL EL 16.300 M)
EP-8	1750 X 500	5.5 T	2	VERTICAL SIDE OF DECK (CL EL 16.450M)
EP-9	500 X 770	5 T	2	OPENING SIDES (CL EL 16.60 M)
EP-10	400 X 1150	6.5 T	2	OPENING SIDES (CL EL 16.60 M)

NOTES:-

1. All ELEVATIONS MARKED ARE W.R.T TG HALL FINISHED FLOOR ELEVATION OF 0.00M WHICH CORRESPONDS TO EL 99.5M
2. All DIMENSIONS ARE IN MM & LEVELS ARE IN METERS.
3. THIS DRG.IS VALIED FOR BOTH TDBFP'S (A & B)
4. ALL SUPPORT PLATES SHALL BE IN THE SCOPE OF CIVIL DESIGNER.
5. SPRINGS HEIGHT AND LOCATIONS ARE TO BE DECIDED BY CIVIL DESIGNER.
6. ✳ INDICATED DIMENSIONS ARE TO BE DECIDED CIVIL DESIGNER
7. FOR POINT LOAD DATA PLEASE REFER BHEL-PEM DRAWING.

LEGEND:-

1. INDICATES LOAD POINTS.
2. a). ALL EP MARKED ON PLAN ARE REQUIRED AT BOTTOM OF DECK. AND EP MARKED ON SIDE (SECTION A-A & VIEW A) ARE REQUIRED AT BOTH SIDES OF DECK.
   b). ADDITIONAL EP OF 500 SQ ARE REQUIRED AT OPPOSITE SIDES OF OPENING FOR TURBINE EXHAUST AT 400MM BELOW EP-5 ALONG CENTRE LINE OF EXHAUST HOOD
   c). ALL EP MARKED ON PLAN ARE REQUIRED AT TOP OF DECK.
3. INSULATION FOR FOUNDATION PROTECTION FOR TURBINE CUTOUT.
4. POCKETS.
5. TOC TOP OF CONCRETE
6. TOG TOP OF GROUT
7. CUT out in TG DECK (Thorough Opening)

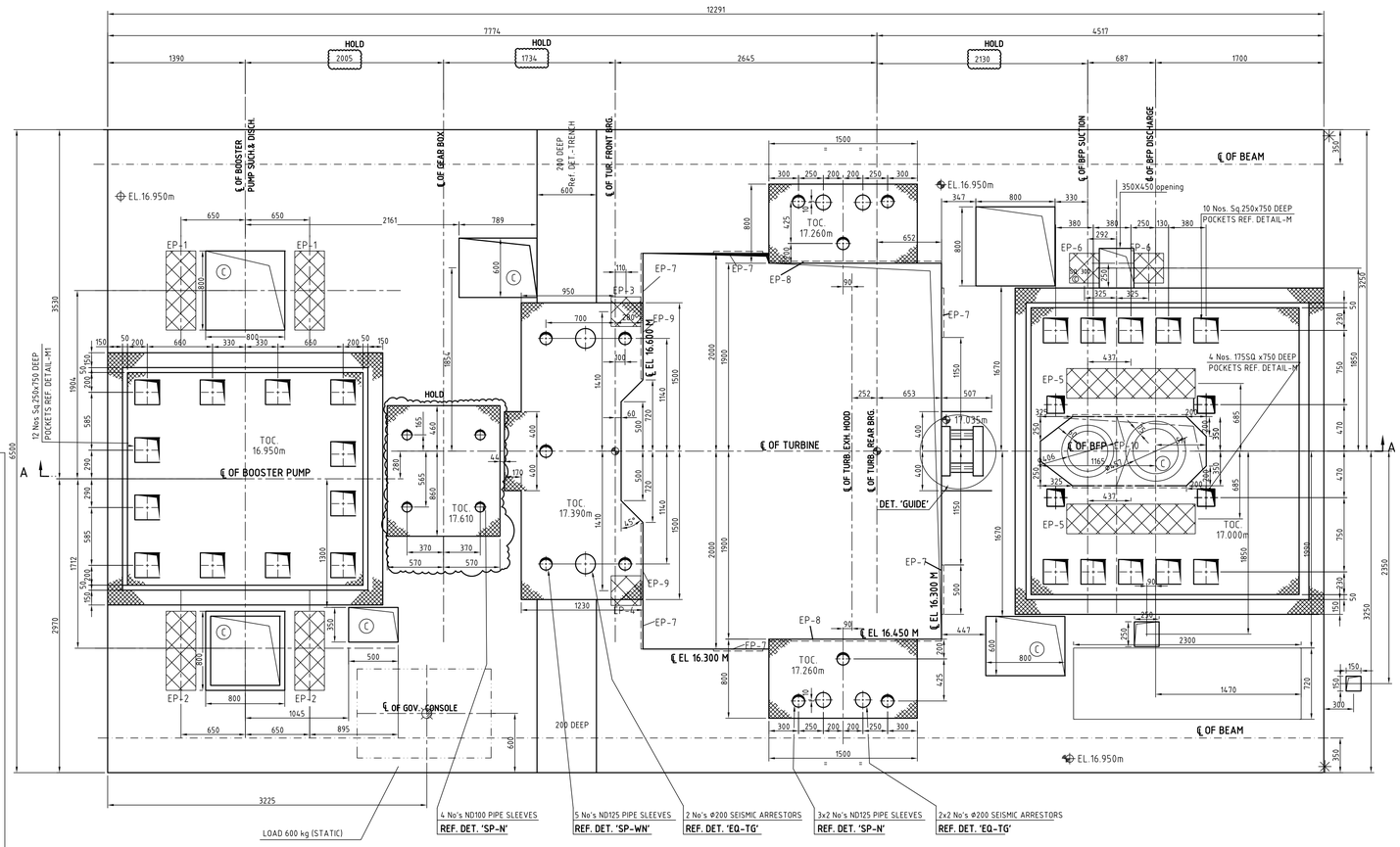

PLAN AT 17.00m (FOR PUMP-A)

(FOR PUMP-B ROTATE TOP DECK BY 180°)

SL. NO.	DESCRIPTION	QTY	TYPE OF FLANGE	STEAM PARAMETERS
1.	FRONT GLAND INLET	1	6" #300 WNRF,SCH=40,C.S.	1.1ata/330°C
2.	BALANCE PISTON GLAND	1	6" #300 WNRF,SCH=40,C.S.	2.1ata/331°C
3.	CASING DRAIN FLANGE-1	1	1" #600 WNRF,SCH=80,C.S	1.1ata/253°C
4.	CASING DRAIN FLANGE-2	1	1" #600 WNRF,SCH=40,C.S	15.5ata/397°C
5.	MAIN STEAM INLET	2	10" #1500 WNRJ,SCH=60,C.S.	15.5ata/397°C
6.	B.P. GLAND INTO CASING	1	6" #150 WNRF,SCH=40,C.S.	2.1ata/331°C
7.	BP PIPING DRAIN	1	1" SOCKET C.S.	2.1ata/331°C
8.	REAR GLAND INLET	1	4" #300 WNRF,SCH=40, C.S.	0.98ata/330°C
9.	REAR STEAM VENT	1	PIPE DIA 88.9x5.49, C.S.	0.98ata/330°C
10.	FRONT STEAM VENT	1	PIPE DIA 48.3x5.08, C.S.	0.98ata/330°C
11.	FRONT STEAM GLAND DRAIN	1	PIPE 10.2x2, SA312,TP321	0.98ata/330°C
12.	REAR STEAM GLAND DRAIN	1	DILO Q 1/2" S.S	0.98ata/330°C

STATUS : PRELIMINARY

CUSTOMER: APGENCO — ANDHRA PRADESH POWER DEVELOPMENT COMPANY LIMITED (APPDCL)

CUSTOMERS CONSULTANT: DEVELOPMENT CONSULTANTS PVT. LTD. CONSULTING ENGINEERS KOLKATA MUMBAI CHENNAI NEW DELHI

PROJECT: 1X800 MW SDSTPS, STAGE – II, UNIT–3, KRISHNAPATNAM, BTG PACKAGE

BHARAT HEAVY ELECTRICALS LTD. HYDERABAD

	NAME	SIGN	DATE	NO.OF VAR.
DRN.	C.BALAJI		12.04.16	-N.A.-
CHD.	S.J.HUSSAIN		12.04.16	
APPD.	M.A.HASEEB		12.04.16	

DEPT. TCEP CODE. 415 | UNTOL. DIMS. GR. C/M/F | SCALE 1:30 | WEIGHT (KG) -N.A.- | REF. TO ASSY. DRG. -N.A.- | ITEM NO. -N.A.- | NO.OF ITEMS -N.A.-

TITLE: FOUNDATION ARRANGEMENT FOR BFP & DRIVE TURBINE

CARD CODE N.A. | DRAWING NO. (1-313-01-15635) HY-DG-1-31301-15635 | REV. 00 | SHT. No 01 | NO. OF SHT. 03

REV.	DATE	ALTERED	CHD/APPD

THE INFORMATION ON THIS DOCUMENT IS THE PROPERTY OF BHARAT HEAVY ELECTRICALS LIMITED IT MUST NOT BE USED DIRECTLY OR INDIRECTLY IN ANY WAY DETRIMENTAL TO THE INTEREST OF THE COMPANY

GENERAL DIMENSIONAL LIMITS,FITS & TOLERANCES AS PER HY0230261

COMPUTER FILE NAME | REF DRG NO. | SIGN AND DATE | INVENTORY NO

Apr Mon 18 09:47 2016

Printed by : CHEKKA BALAJI-FME3025 / 6031358 on 18-04-16 09:33:18

This Drawing is printed from Engineering Digital Archive System (EDAS). Therefore signatures are not essentially required.

FIRST ANGLE PROJECTION

(ALL DIMENSIONS ARE IN mm)

DRG. NO. HY-DG-1-31301-15635 SH. 02 OF 03

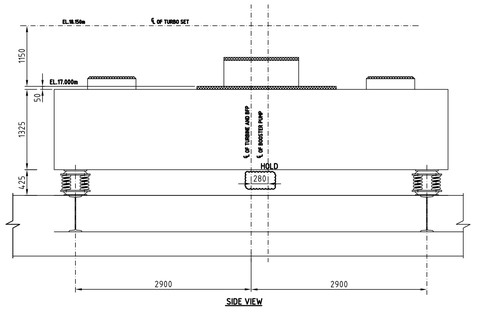

NORTH

REF. DRGS.: –

S.No.	BHEL DRG.No.	TITLE
1	PE-DG-420-100-M005	TG EQUIPMENT PLAN AT EL.17.0 m.

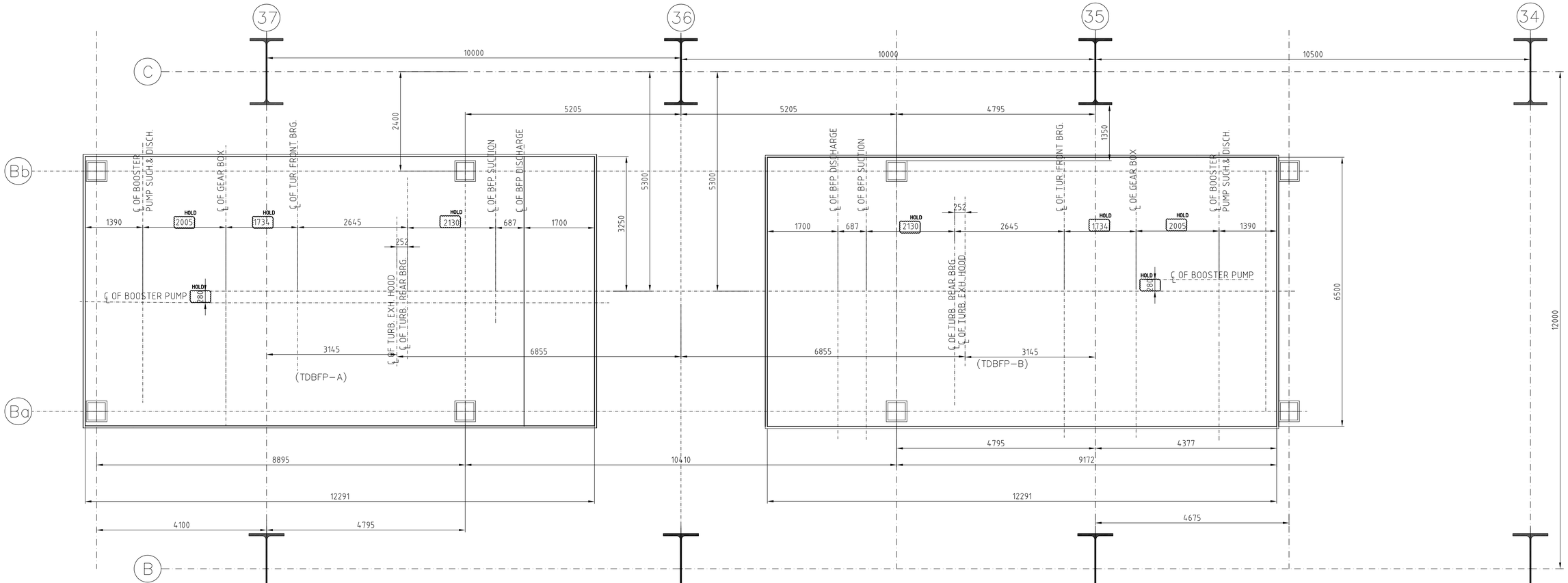

PLAN AT EL.17.00M
(TDBFP–A)

PLAN AT EL.17.00M
(TDBFP–B)

STATUS : PRELIMINARY

CUSTOMER: ANDHRA PRADESH POWER DEVELOPMENT COMPANY LIMITED (APPDCL)

APGENCO

CUSTOMERS CONSULTANT: DEVELOPMENT CONSULTANTS PVT. LTD. CONSULTING ENGINEERS
KOLKATA MUMBAI CHENNAI NEW DELHI

PROJECT: 1X800 MW SDSTPS, STAGE – II, UNIT–3, KRISHNAPATNAM, BTG PACKAGE

BHARAT HEAVY ELECTRICALS LTD.
HYDERABAD

	NAME	SIGN.	DATE	NO.OF VAR.
DRN.	C.BALAJI		12.04.16	
CHD.	S.J.HUSSAIN		12.04.16	-N.A.-
APPD	M.A.HASEEB		12.04.16	

REV.	DATE	ALTERED	CHD/APPD

ZONE

DEPT.	UNTOL. DIMS. GR.		SCALE	WEIGHT (KG)	REF. TO ASSY. DRG.	ITEM NO.	NO.OF ITEMS
TCEP CODE. 415	~~C/M/F~~		1:50	-N.A.-	-N.A.-	-N.A.-	-N.A.-

TITLE
FOUNDATION ARRANGEMENT FOR BFP & DRIVE TURBINE

CARD. CODE N.A.

DRAWING NO.(1-313-01-15635) HY-DG-1-31301-15635 REV. 00

SHT. No 02 NO. OF SHT. 03

GENERAL DIMENSIONAL LIMITS,FITS & TOLERANCES AS PER HY0230261

THE INFORMATION ON THIS DOCUMENT IS THE PROPERTY OF BHARAT HEAVY ELECTRICALS LIMITED.IT MUST NOT BE USED DIRECTLY OR INDIRECTLY IN ANY WAY DETRIMENTAL TO THE INTEREST OF THE COMPANY

COMPUTER FILE NAME | REF. DRG. NO. | SIGN. AND DATE | INVENTORY NO

Apr Mon 18 09:47 2016

Printed by : CHEKKA BALAJI-FME3025 / 6031358 on 18-04-16 09:33:19

This Drawing is printed from Engineering Digital Archive System (EDAS).
Therefore signatures are not essentially required.

FIRST ANGLE PROJECTION

(ALL DIMENSIONS ARE IN mm)

DRG. NO. HY-DG-1-31301-15635 SH. 03 OF 03

TYPE OF TURBINE :-	NK 63/71-3
TYPE OF BOILER FEED PUMP :-	MDG 455
TYPE OF BOOSTER PUMP :-	MLC 450x350H

WEIGHT OF SINGLE HEAVIEST PIECE FOR

	ERECTION in kg.	MAINTENANCE in kg.
TURBINE	65000	24,000
BFP	25,700	3500
BP	8,500	1500

DIRECTION OF ROTATION VIEWED FROM BOOSTER PUMP TO BFP FOR :-

TURBINE - CLOCKWISE
BFP - CLOCKWISE
BP - COUNTER CLOCK WISE

DETAIL 'PED'

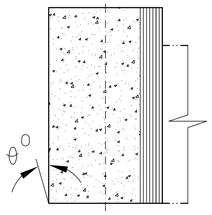

THE THICKNESS OF THE CONCRETE MEMBER MUST BE SUFFICEINT TO ENSURE THAT THE ANGULAR DEFLECTION DOES NOT EXCEED : 0.0115 DEG. WITH THE HORI-ZONTAL FORCES SPECIFIED.

DETAIL 'TRENCH'

REFER NOTE-14

PROPOSED TRENCH COVER

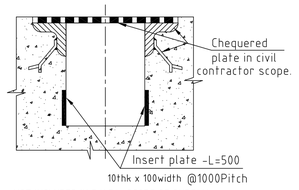

NOT INCLUDED IN B.H.E.L. SCOPE OF SUPPLY.

Speeds in rpm

EQUIPMENT	RATED SPEED	CRITICAL SPEEDS	
		FIRST	SECOND
TURBINE	4995	Beyond 125% of MCS	-
BFP	4995	-	-
BP	1495	-	-

NOTE :- The installation details shown here are only informative. For final installation, ref. the Assembly drawings furnished alongwith the respective equipment.

FORCES ON FOUNDATION IN kgf

LOAD POINT \ LOAD CONDITION	STATIC LOAD WITHOUT ROTATING WEIGHT	ROTATING WEIGHT	OPERATING WEIGHT OF CONDENSER/VACUUM PULL	SHORT CIRCUIT LOAD *	LOAD DUE TO OPERATING TORQUE	OPERATING UNBALANCE DYN. LOAD (ROTATING) **	FAILURE MODE LOAD ** (Turbine : Blade breakage
	1	2	3	4	5	6	7
A	-	2920	-	-	-	987	5922
A1	14375	-	1403	-	1068	-	-
A2	14375	-	1403	-	-1068	-	-
B	-	-	-	-	-	-	-
B1	15955	1555	13318	-	-354	526	3156
B2	15955	1555	13318	-	354	526	3156
C	660	-	-	-	-	-	-
C1	-	220	-	-	3927	75	450
C2	-	550	-	-	-3927	55	330

HOLD

DETAIL 'M'

FOUNDATION BOLT ARRANGEMENT

REFER NOTE-14

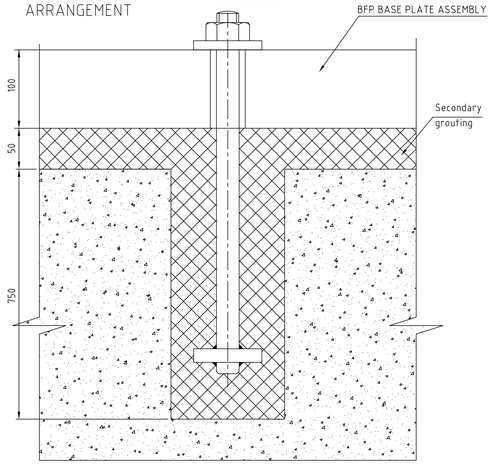

Note:Sealing mortar pouring and bitumen shall be part of ERECTION contract

DETAIL 'GUIDE'

(FOR EXHAUST HOOD GUIDE SUPPORT)

NOT INCLUDED IN B.H.E.L. SCOPE OF SUPPLY.

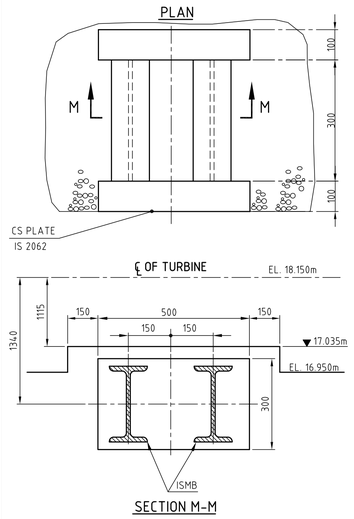

SECTION M-M

DETAIL 'EQ-TG'

REFER NOTE-14

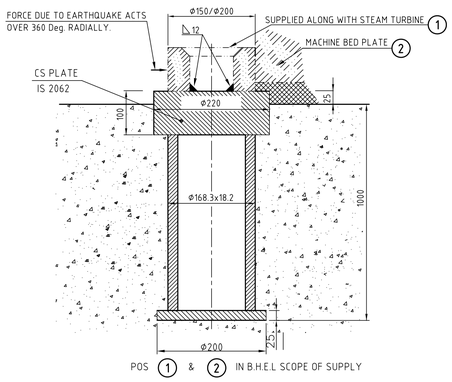

POS 1 & 2 IN B.H.E.L SCOPE OF SUPPLY

HORIZONTAL FRICTIONAL FORCES IN kgf

A- Working point of forces at front : 710 mm
B1, B2- Working point of forces at rear : 840 mm
below turbine axis

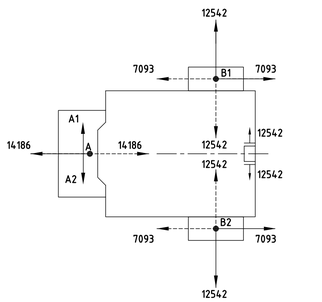

THESE FORCES ALTERNATE IN DIRECTION

FOUNDATION LOADING DATA

(LOAD POINT APPLICATION IS AT EACH POCKET)

LOAD APPLICATION POINT	EQUIPMENT	WEIGHT		STATIC LOAD ON EACH POINT(kg's)	DYNAMIC LOAD ON EACH POINT(kg's)		
		DRY	WET	VERTICAL	VERTICAL	HORIZONTAL	AXIAL
5A	BOILER FEED PUMP (MDG 455)	25700	26000	1858	2047	2047	1365
3A	BOOSTER PUMP (MLC 450x350 H)	8500	9000	750	738	738	492

** At each supporting point acting in radial direction over 360 deg.
* Loads on either side of TG axis act in opposite directions and the direction changes at 50 cycles/sec.

NOTE :-1. DOWNWARD FORCES ARE POSITIVE
2. GRADE OF BALANCING: BFP, BP:G2.5
3. MASS MOMENT OF INERTIA:
BFP : 215 N-Sq.m, BP : 466 N- Sq.m] GD^2

DETAIL 'M1'

FOUNDATION BOLT ARRANGEMENT

REFER NOTE-14

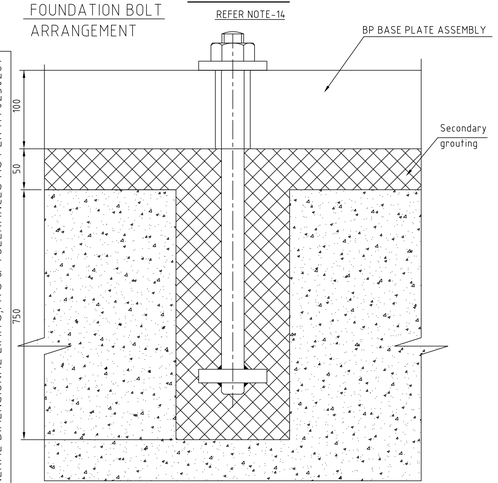

GENERAL DIMENSIONAL LIMITS,FITS & TOLERANCES AS PER HY0230261

Note:Sealing mortar pouring and bitumen shall be part of ERECTION contract

DETAIL 'SP-WN'

FOUNDATION BOLT ASSEMBLY

REFER NOTE-14

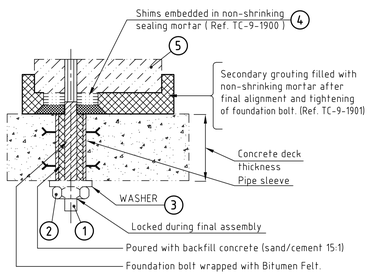

POS 1 TO 5 IN B.H.E.L SCOPE OF SUPPLY

DETAIL 'SP-N'

REFER NOTE-14

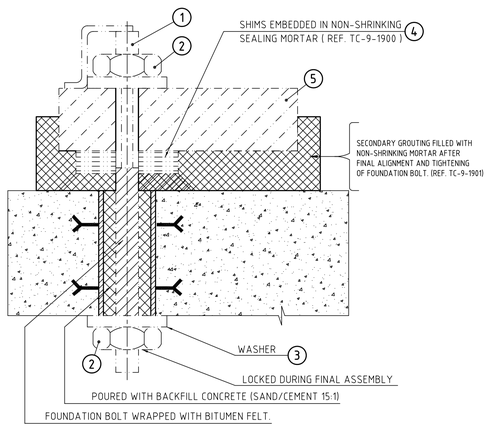

POS 1 TO 5 IN B.H.E.L SCOPE OF SUPPLY

DETAILS FOR FOUNDATION CALCULATIONS

NOTES :-

1. All dimensions are in mm and elevations are in metres.
2. This foundation drawing is only intended as basis for preparing the layout for foundation (by the BHEL). All civil structural dimensions are tentative and same shall be decided by the civil engineer concerned. The foundation design calculations shall consider all the static and dynamic loads acting simultaneously.
3. Suitable earth quake coefficient applicable for the project site should be adopted for seismic design of foundation as per IS 1893.
4. The foundation block should be designed so that natural frequencies of foundation are sufficiently away from the frequencies of machines. The design shall be as per DIN 4024 standard and IS.2974 part III.
5. Design of the foundation shall consider the allowable limits of vibration behaviour of machines (Group - 1) as per VDI 2056.
6. Bearing failure loads are less than failure load condition loads specified in col. 7 of the "Forces on Foundation " table.
8. Dynamic loads in axial direction are negligible.
9. Magnitude of unbalanced forces can be taken in vertical and horizontal directions as equal.
10. Max. live load on top of the deck is : 2000 kg./sq.m
11. Foundation block must not be joined to any other structure to avoid vibration transmission.
12. Portions shown thus ▨ in top deck are filled with secondary grouting. The concrete surface in these areas is to be ensured free from dust, grease and oil. Any wooden plugs present in these areas are to be removed. The packing plates below the machine sole plates shall be embedded into a 20 mm thick layer of special grout (local to plates) and are to be levelled horizontally. later, total secondary grouting may be completed.
13. For grouting instructions ref. TC-9-1901 (5 sheets). And for grouting cement specification ref. TC-9-1900.
14. All embedded plates, angles, sleeves, pipes, ducts and any other structurals are not part of Turbine scope of supply unless otherwise specified.

STATUS : PRELIMINARY

CUSTOMER: APGENCO — ANDHRA PRADESH POWER DEVELOPMENT COMPANY LIMITED (APPDCL)

CUSTOMERS CONSULTANT: DEVELOPMENT CONSULTANTS PVT. LTD. CONSULTING ENGINEERS, KOLKATA MUMBAI CHENNAI NEW DELHI

PROJECT: 1X800 MW SDSTPS, STAGE – II, UNIT-3, KRISHNAPATNAM, BTG PACKAGE

BHARAT HEAVY ELECTRICALS LTD. HYDERABAD

	NAME	SIGN.	DATE
DRN.	C.BALAJI		12.04.16
CHD.	S.J.HUSSAIN		12.04.16
APPD.	M.A.HASEEB		12.04.16

NO.OF VAR. -N.A.-
NO.OF ITEMS -N.A.-

DEPT.	UNTOL. DIMS. GR.	SCALE	WEIGHT (KG)	REF. TO ASSY. DRG.	ITEM NO.
TCEP CODE. 415	~~E/M/F~~	N.T.S	-N.A.-	-N.A.-	-N.A.-

TITLE: FOUNDATION ARRANGEMENT FOR BFP & DRIVE TURBINE

CARD CODE: N.A.

DRAWING NO. (1-313-01-15635) HY-DG-1-31301-15635 REV. 00

SHT. No 03 NO. OF SHT. 03

REV.	DATE	ALTERED	CHD/APPD

ZONE

THE INFORMATION ON THIS DOCUMENT IS THE PROPERTY OF BHARAT HEAVY ELECTRICALS LIMITED IT MUST NOT BE USED DIRECTLY OR INDIRECTLY IN ANY WAY DETRIMENTAL TO THE INTEREST OF THE COMPANY

COMPUTER FILE NAME | REF. DRG. NO. | SIGN. AND DATE | INVENTORY NO

Apr Mon 18 09:48 2016

Printed by : CHEKKA BALAJI-FME3025 / 6031358 on 18-04-16 09:33:20

This Drawing is printed from Engineering Digital Archive System (EDAS). Therefore signatures are not essentially required.