COPYRIGHT AND CONFIDENTIAL
The information on this document is the property of BHARAT HEAVY ELECTRICALS LIMITED.
It must not be used directly or indirectly in any way detrimental to the interest of the company.

PACKING OF FLANGE TO FLANGE GAS TURBINE,9FB

1.0 Introduction

This specification covers the packing requirements of the Gas turbine flange to flange. The packing requirements specified herein are intended to ensure safe preservation during transportation of the Gas turbine.

2.0 Scope

Scope of packing has been broadly divided into following categories.

2.1 Turbine Interior

a. The compressor section of the turbine is "fogged" using VpCI™-337GE anti-corrosive material or approved acceptable substitute. VpCI 337GE is a vapor phase-corrosion inhibitor.

b. Fogging is performed by spraying the VpCI material into the compressor using a fogging tool or a spray gun, both shown in Figure 1 and both of which use pressurized shop air.

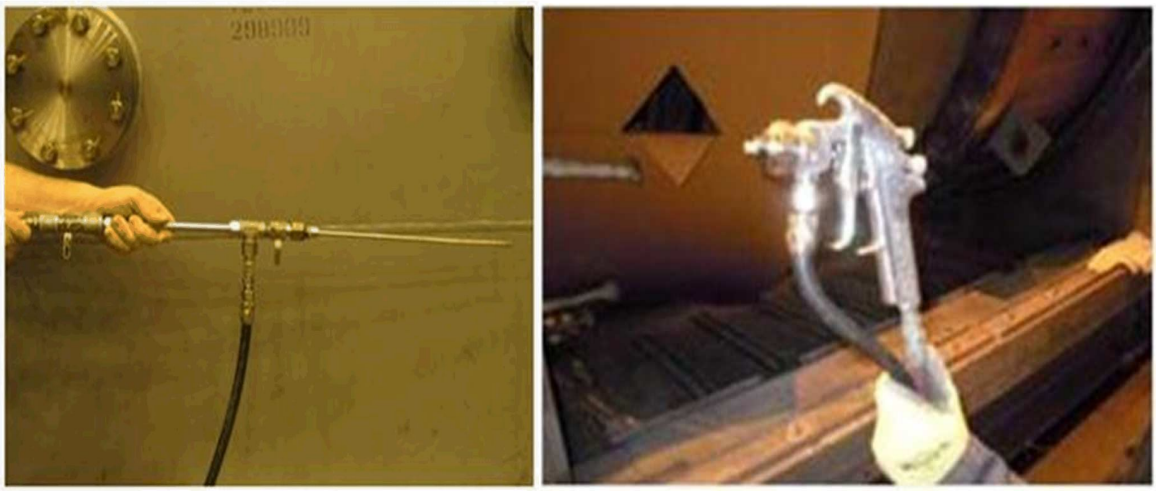

Figure 1. Fogging Tool (L) and Spray Gun (R)

c. Fogging can be accomplished by the following method.

COPYRIGHT AND CONFIDENTIAL
The information on this document is the property of BHARAT HEAVY ELECTRICALS LIMITED .
It must not be used directly or indirectly in any way detrimental to the interest of the company.

Inlet & Exhaust application

i. This fogging will be done after the inlet & exhaust Milcorr bonnet has already been installed.

ii. Fogging will be done in two locations of both the inlet & exhaust areas. (See Figure 2)

iii. Locate the 4 o'clock position and cut a triangular opening. Keep the flap down in the bonnet to allow access for the fogging tool to fit into. This opening should only be wide enough to allow an operators and fogging tool through.

iv. Spray this solution inwards toward the IGV blades inside the casing. Do not allow fogging equipment to come into contact with IGV blades.

v. Once spraying is complete, fold the flap back up, and tape it shut with repair tape (supplied with repair kit) or apply more Milcorr material and apply heat to seal.

vi. Repeat process on opposite side of inlet bell mouth or exhaust diffuser around the 8 o'clock position.

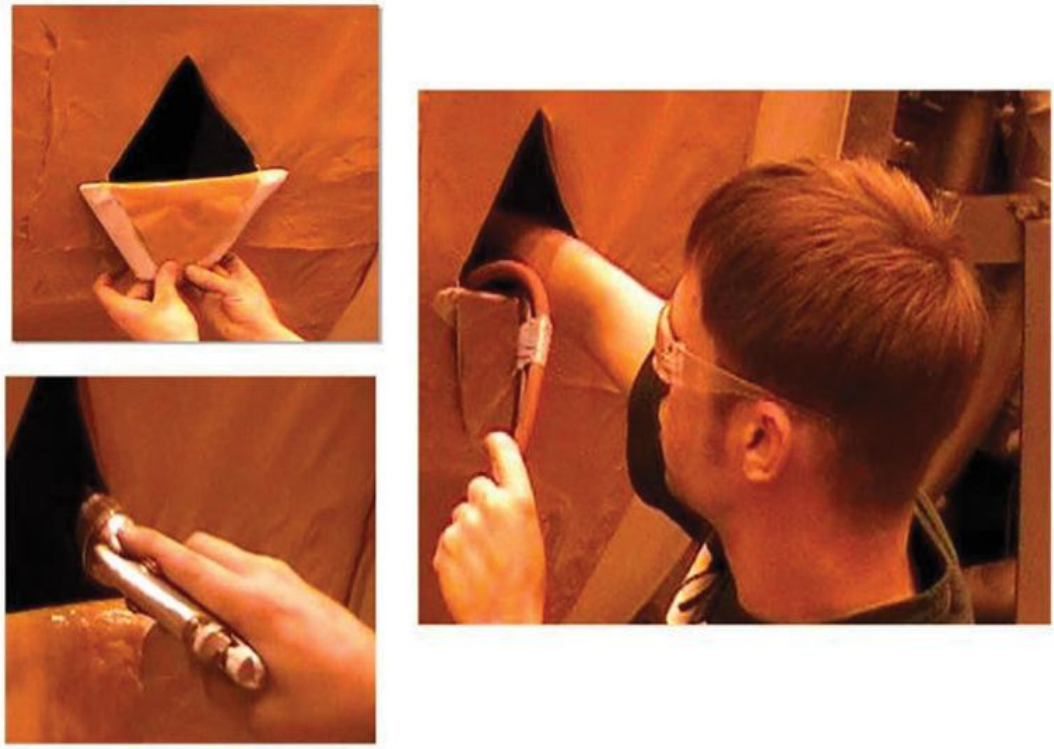

Figure 2. Inlet & Exhaust Opening Fogging Applications

COPYRIGHT AND CONFIDENTIAL
The information on this document is the property of BHARAT HEAVY ELECTRICALS LIMITED .
It must not be used directly or indirectly in any way detrimental to the interest of the company.

2.2 Exhaust Exterior

a. Prior to sealing the exhaust end of the gas turbine, a pre-determined amount of VCI-309 emitter pads are hung in a circular pattern around the exhaust flange((Figure 4). The VCI-309 emitter pads (Figure 3) emit chemical vapors that are attracted to bare metal and bond with metal to form a corrosion resistant barrier.

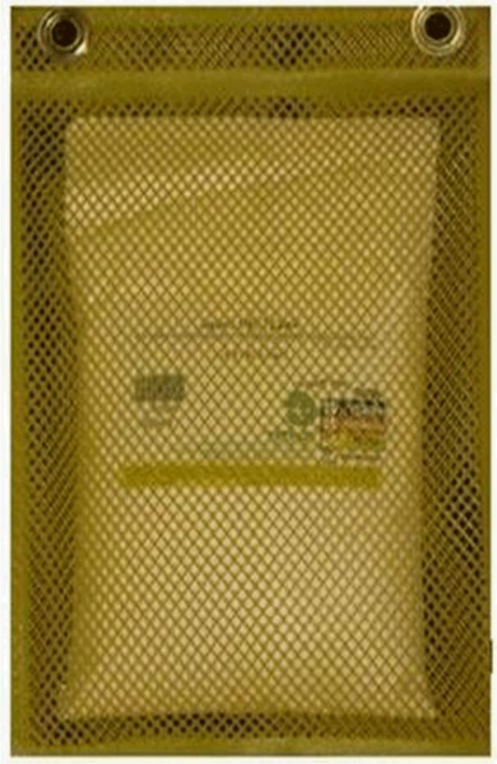

Figure 3. Emitter Pads VpC-309

b. The exhaust end is then covered with MilCorr VpCI™ shrink film, sized to fit the exhaust, and secured in place via a heat shrink method or tied in place. The MilCorr VpCI shrink film is a vapor phase corrosion inhibitor with UV light protection. After the MilCorr shrink film is installed, a circular corrugated plastic cover of 10mm thick is to be applied on top of the MilCorr ((Figure 5).Maximum Diameter of exhaust end is 4579mm, vendor has to use this dimension as reference for making circular corrugated plastic cover at exhaust end. On this cover, openings shall be provided at 2 O' clock and 10 O' clock position for fogging. Extraction pump for sucking of fog should be used at the exhaust end to ensure uniform distribution of fogging inside GT. One pipe with sleeve arrangement should be used for sucking of fogging. Same can be used for dehumidification arrangement for long term storage of GT.

COPYRIGHT AND CONFIDENTIAL
The information on this document is the property of BHARAT HEAVY ELECTRICALS LIMITED .
It must not be used directly or indirectly in any way detrimental to the interest of the company.

Figure 4. Exhaust Diffuser with VpCI Pouches

Figure 5. Exhaust Diffuser with MilCorr VpCI™ shrink film& corrugated plastic cover.

COPYRIGHT AND CONFIDENTIAL
The information on this document is the property of BHARAT HEAVY ELECTRICALS LIMITED .
It must not be used directly or indirectly in any way detrimental to the interest of the company.

2.3 Inlet Exterior

a. Prior to sealing the inlet end of the gas turbine, a pre-determined amount of VCI-309 emitter pads are hung in a circular pattern around the inlet flange. The VCI-309 emitter pads (as in Figure 6) emit chemical vapors that are attracted to bare metal and bond with metal to form a corrosion resistant barrier.

b. The inlet end is then covered with MilCorr VpCI shrink film, which is sized to fit the inlet, and secured in place via a heat shrink method or tied in place. The MilCorr VpCI shrink film is a vapor phase corrosion inhibitor with UV light protection.

c. For the F Class turbines, bearings located inside of the inlet plenum are covered with a corrugated plastic cover, attached to the rotor-blocking device MLI 0103 prior to installation of the MilCorr shrink film.

d. After the MilCorr shrink film is installed, to prevent atmosphere air to enter inside the GT, close the inlet bell mouth opening with a circular corrugated plastic cover of 10mm thickness on top of the MilCorr(as in Figure 7). Smaller flange which is with rotor locking beam shall be covered with a circular corrugated plastic cover. Size of this cover shall be dia 3870mm which is equal to major dia of adjacent flange.

The closing sheet shall have an opening at 4 O' clock and 8 O' clock position for insertion of fogging tool. The same holes will be used for enabling dehumidifier.

Figure 6. Inlet with VpCI Pouches

COPYRIGHT AND CONFIDENTIAL
The information on this document is the property of BHARAT HEAVY ELECTRICALS LIMITED .
It must not be used directly or indirectly in any way detrimental to the interest of the company.

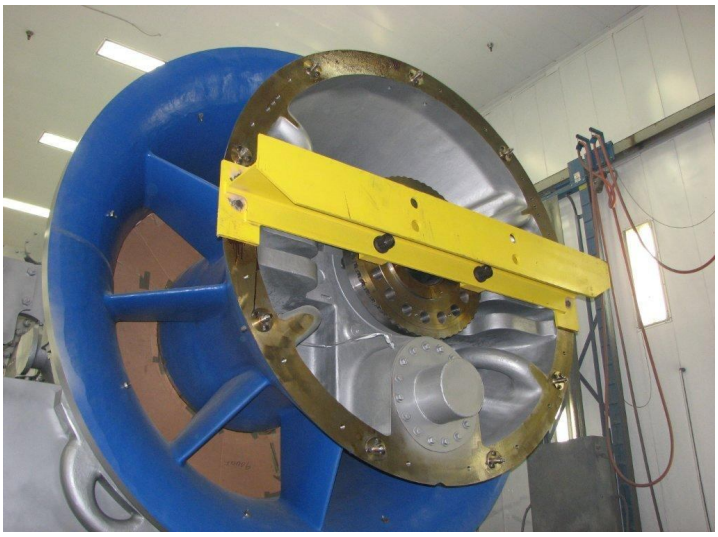

Figure 7. Inlet with with MilCorr VpCI™ shrink film& corrugated plastic cover

2.4 Turbine Exterior

All exposed external, non-machined surfaces shall be covered by one of the following surface protection methods: paint or engineering approved turbine oil with corrosive reducing additives:

a. Tectyl™ 506 is applied to all exposed machined surfaces (as in Figure 8).. Following application of the surface protection method, the turbine is enclosed by a large tarp (as in Figure 9).

b. The tarp is cinched and shrunk around the turbine ensuring the inlet and exhaust ends are sealed. This tarp is to be remain on the turbine during storage and transit by strapping it with pet strap or equivalent at various locations as shown in fig9. Tarpalin shall be heavy duty HDPE tarpaulin with 180 GSM to 220 GSM.

Figure 8. Tectyl 506 Applied to Machined Surfaces

COPYRIGHT AND CONFIDENTIAL
The information on this document is the property of BHARAT HEAVY ELECTRICALS LIMITED .
It must not be used directly or indirectly in any way detrimental to the interest of the company.

Figure 9. Final packing of Flange to Flange GT

d. For on-base enclosures, enclosure doors, access doors and panels are secured to the frame. Milcorr material and a desiccant capsule are placed into all electrical junction boxes. Desiccant capsules are devices designed to provide corrosion protection in enclosed no ventilated areas up to 5 cubic feet. Vapor phase corrosion inhibitor technology emits a protective coating on all metal surfaces.

3.0 Connection Covers

All gas turbine connections (including extraction and secondary flow ports, pressure monitoring parts, bearing lube oil feed and drain openings, etc.) shall be covered to protect the gas turbine from contamination.

A. Flange covers may be metal or plastic construction, and shall be secured to the gas turbine in such a way as to ensure that they do not fall out during shipment.

B. Steel covers shall be painted on both sides and made of stainless steel. All covers shall be painted or made of colored plastic to indicate that they are temporary flange covers

C. Bolts shall be coated with an approved anti-seize compound. For connection identifiers on the drawing that lists flange covers, refer to MLI 0329 - view drawing for detailed locations.

D. Vendor shall supply following flanges with quantity=18. Material shall be Low carbon steel, 3mm thickness.

COPYRIGHT AND CONFIDENTIAL
The information on this document is the property of BHARAT HEAVY ELECTRICALS LIMITED.
It must not be used directly or indirectly in any way detrimental to the interest of the company.

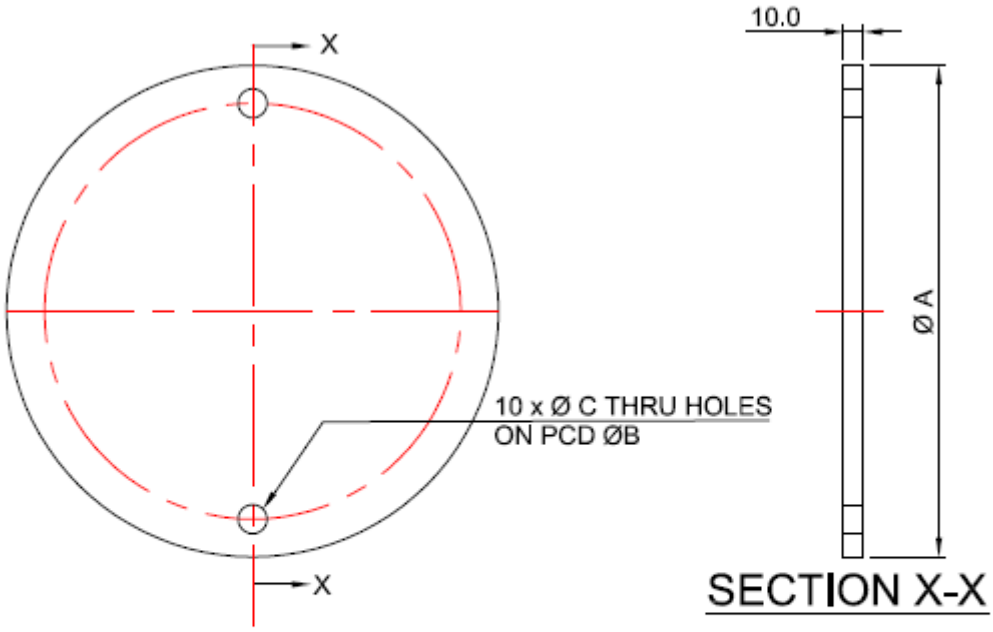

01	703	660.4	24.0
VAR	ØA±0.5	ØB±0.5	ØC±0.5

NOTES:-
1. ALL DIMENSIONS ARE IN MM.
2. ROUND OFF ALL SHARP CORNERS.

4.0 Miscellaneous

A. Turbine base machined parts are covered with 1 coat of Tectyl 506. Shock indicators (258A4714P001 and P002) shall be mounted as per drawing 255A4682 if required by contract or justified.

B. One of each shock indicator shall be mounted on the face of the speed ring and one each on the forward face-off the combustion ring as shown in figure 10. Shock indicators have an adhesive back. To install, remove the tape liner and press the unit onto a clean flat surface.

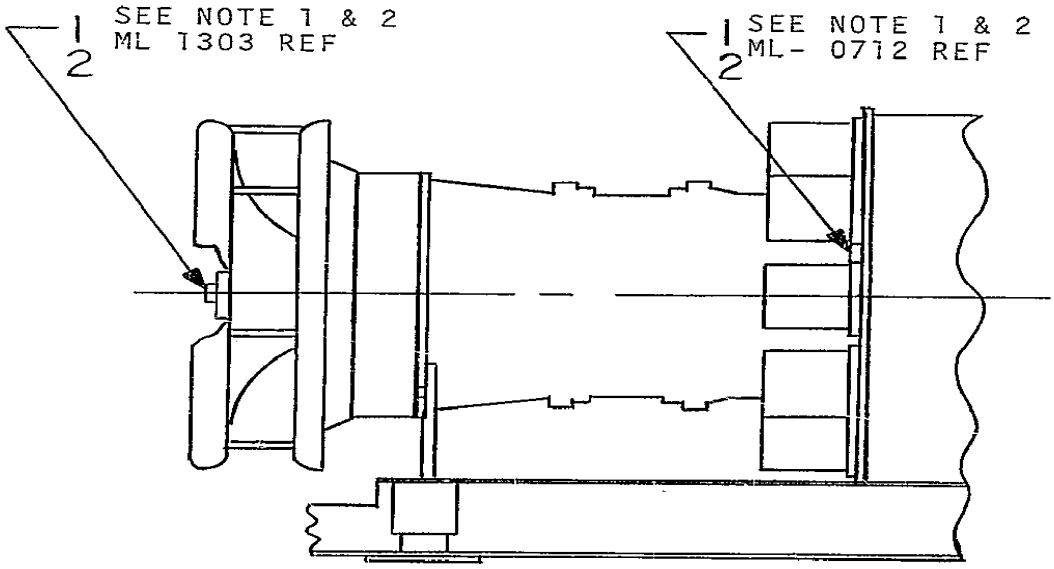

Figure 10. Shock indicators mounting

COPYRIGHT AND CONFIDENTIAL
The information on this document is the property of BHARAT HEAVY ELECTRICALS LIMITED .
It must not be used directly or indirectly in any way detrimental to the interest of the company.

VAR NO	DESCRIPTION	MATERIAL CODE/PR	Applicable BHEL drawings/specifications
01	PACKING OF FLANGE TO FLANGE 9F.O5 GT Scope consists of material required for clauses 2, 3 and 4 of this specification.	GT9753111010	GT53111-R00
02	PACKING OF FLANGE TO FLANGE 9F.O5 GT-SERVICE Scope consists of service required for installation of packing called in clauses 2,3 and 4 of this specification. Lump sum charges for complete service activities are applicable. Vendor shall arrange boarding, lodging and tools for execution of work.	1600009983	GT53111-R00

COPYRIGHT AND CONFIDENTIAL
The information on this document is the property of BHARAT HEAVY ELECTRICALS LIMITED .
It must not be used directly or indirectly in any way detrimental to the interest of the company.

Rev. No.	Date	Revision Details	Revised By	Approved By
00	08-12-16	First made	-	-

COPYRIGHT AND CONFIDENTIAL
The information on this document is the property of BHARAT HEAVY ELECTRICALS LIMITED .
It must not be used directly or indirectly in any way detrimental to the interest of the company.