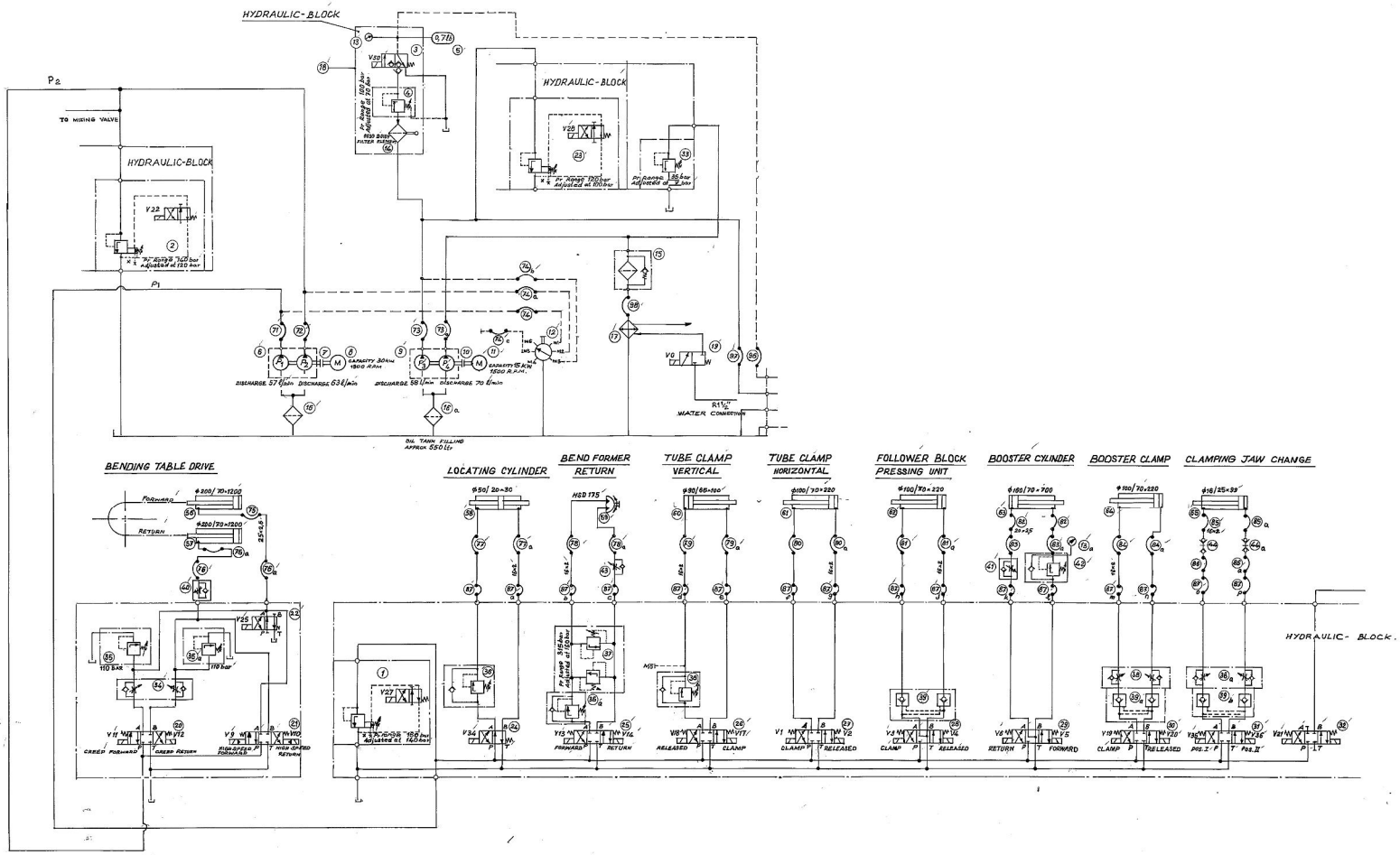

POSITION PLAN

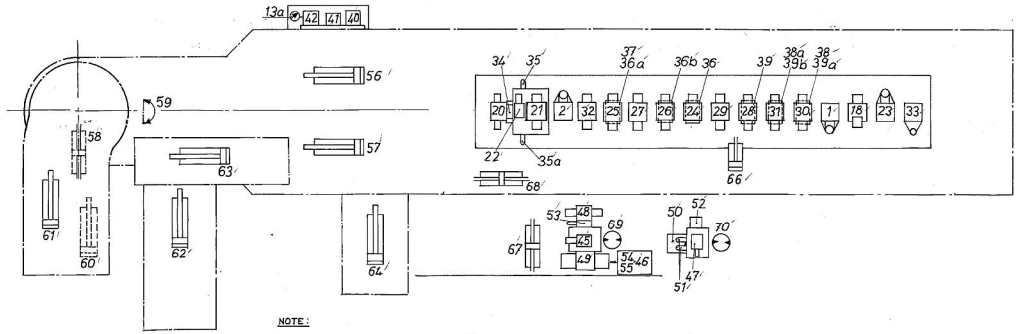

NOTE:

CLEAN OIL FILTERS EVERY 100 WORKING HOURS

FIRST OIL CHANGE AFTER 500 WORKING HOURS

FOLLOWING OIL CHANGES EVERY 1000 WORKING HOURS

DO NOT RUN PUMPS WITHOUT OIL

OIL FILLING "SHELL TELLUS C46" OR EQUIVALENT, APROX 550 LITRES, (36-37 Gal)

FOR OIL CHANGES USE OIL FILTERED TO 25 MICRON

USE HYDRAULIC OIL HAVING A VISCOSITY OF 30c St

IF NOT OTHERWISE MENTIONED, ALL THE PARTS ARE MAKE "REXROTH"

IF NOT OTHERWISE MENTIONED, ALL HIGH PRESSURE HOSES ARE MAKE "BTR"

FOR REFERENCE PURPOSE ONLY

REFERENCE ONLY NOT FOR MANUFACTURE

No. of Nos	Description	Mfg. Product	Final Mat.	Total Net Wt. (kg)	Total Gross Wt. (kg)	Drg. No.	Item No.
1	HYDRAULIC HOSE		BTR	22B B NW Φ20/28×1100			98
1	HYDRAULIC HOSE		BTR	22B B NW Φ15/16×650			97
1	HYDRAULIC HOSE		BTR	7EF 5 R33 Φ8×700			96
1	HYDRAULIC HOSE		BTR	7EF 5 R33 Φ8×1600			95
1	HYDRAULIC HOSE		BTR	7EF 5 R33 Φ8×3550			94
1	HYDRAULIC HOSE		BTR	22B B NW Φ10/12×3550			93
2	HYDRAULIC HOSE		BTR	22B B NW Φ13/16×3550			92
1	HYDRAULIC HOSE		BTR	22B B NW Φ11/14×1600			91
2	HYDRAULIC HOSE		BTR	22B B NW Φ13/16×600			90
2	HYDRAULIC HOSE		BTR	22B B NW Φ10/12×600			89
2	HYDRAULIC HOSE		BTR	22B B NW Φ6/8×900	BBA: 1900		88
16	HYDRAULIC HOSE		BTR	22B B NW Φ13/16×300	DKS/DKS 90°		87
2	HYDRAULIC HOSE		BTR	22B B NW Φ10/12×[illegible]			86
2	HYDRAULIC HOSE		BTR	22B B NW Φ6/8×2800	WITH STEEL ARMOURING		85
2	HYDRAULIC HOSE		BTR	22B B NW Φ10/12×700	WITH STEEL ARMOURING		84
2	HYDRAULIC HOSE		BTR	22B B NW Φ16/20×1000			83
2	HYDRAULIC HOSE		BTR	22B B NW Φ16/20×1800	WITH STEEL ARMOURING		82
2	HYDRAULIC HOSE		BTR	22B B NW Φ11/14×1500			81
2	HYDRAULIC HOSE		BTR	22B B NW Φ10/12×2400	BBA: 2300		80
2	HYDRAULIC HOSE		BTR	22B B NW Φ10/12×1500	WITH STEEL ARMOURING		79
2	HYDRAULIC HOSE		BTR	22B B NW Φ10/12×400			78
2	HYDRAULIC HOSE		BTR	22B B NW Φ6/8×1000			77
2	HYDRAULIC HOSE		BTR	22B B NW Φ16/20×800			76
2	HYDRAULIC HOSE		BTR	22B B NW Φ20/28×1200			75
4	HYDRAULIC HOSE		BTR	22B B NW Φ6/8×400	TAC: 1000		74
2	HYDRAULIC HOSE		BTR	22B B NW Φ16/20×450	DKS/DKS 90°		73
1	HYDRAULIC HOSE		BTR	22B B NW Φ20/28×1100			72
1	HYDRAULIC HOSE		BTR	22B B NW Φ16/20×600			71
1	RADIAL PISTON MOTOR			KM 20/16 2A1			70
1	RADIAL PISTON MOTOR			KM 20/16 2A1			69
1	CYLINDER			01313-07-000-0	50 Ltr		68
1	CYLINDER			02.63.40.04.1417	80 Ltr		67
1	CYLINDER			01448-15-030-1			66
1	CYLINDER			01121-00-000-1	GR 80/16/25-200		65
1	CYLINDER	HYDRO-SERVICE		01.100.70.01.1463	220 Ltr		64
1	CYLINDER	HYDRO-SERVICE		01.160.70.02.0018	700 Ltr		63
1	CYLINDER	HYDRO-SERVICE		01.100.70.01.1463	220 Ltr		62
1	CYLINDER	HYDRO-SERVICE		01.100.70.01.1463	220 Ltr		61
1	CYLINDER	HYDRO-SERVICE		01.50.65.01.1418	100 Ltr		60
1	CYLINDER	HYDRO-SERVICE		01.00.50.06.1218	HSD 175		59
1	CYLINDER	HYDRO-SERVICE		02.50.20.04.1416	30 Ltr		58
1	CYLINDER	HYDRO-SERVICE		01.200.70.02.1542	1200 Ltr		57
1	CYLINDER	HYDRO-SERVICE		01.200.70.02.1542	1200 Ltr		56
1	TWIN NON RETURN VALVE			Z2S 6-4X			55
1	TWIN THROTTLE NON RETURN VALVE			Z2FS 6-3X			54
1	PRESSURE REDUCING VALVE			ZDR 10 DA 2-4X/150Y			53
1	PRESSURE REGULATING VALVE			DRC 16 4-3X/315Y			52
2	PILOTED PRESSURE ADJUSTING VALVE			DB 10 K2-3X/315Y			51
1	PROPORTIONAL VALVE			4WRZ 10E 25-3X/6A24 NTZ 4M			50
1	PROPORTIONAL VALVE			4WRZ 10E 25-3X/6A24 NTZ 4M			49
1	DIRECTIONAL VALVE			4WE 10E-1X/LG24 NZ4			48
1	DIRECTIONAL VALVE			4WE 5N 6B1G24 NZ4			47
1	DIRECTIONAL VALVE			4WE 6D-5X/AG24 NZ4			46
1	DIRECTIONAL VALVE			4WE 6D-5X/AG24 NZ4			45
2	HYDRAULIC HOSE-COUPLING		AEROQUIP	5622-6-6			44
1	THROTTLE NON RETURN VALVE			MK 06 K2			43
1	PILOTED PRESSURE REDUCING VALVE			DR 10 4-201 315Y			42
1	FLOW REGULATING VALVE			2FRM 10-2X/5GL			41
1	FLOW REGULATING VALVE			2FRM 16-2X/6GL			40
3	TWIN NON-RETURN VALVE			Z2S 10-7X			39
2	TWIN THROTTLE NON-RETURN VALVE			Z2FS 10-2X			38
1	PILOTED PRESSURE ADJUSTING VALVE			Z2DB 10 VD 2.2X/315			37
3	PRESSURE REDUCING VALVE			ZDR 10 DA 2-4X/150Y			36
2	PILOTED PRESSURE ADJUSTING VALVE			DB 10 A2-3X/315			35
1	TWIN THROTTLE NON-RETURN VALVE			Z2FS-6-3X			34
1	PRESSURE ADJUSTING VALVE			DB 10 3 3X/100			33
1	DIRECTIONAL VALVE			4WE 10E 1X/LG24 NZ4			32
1	DIRECTIONAL VALVE			4WE 10E 1X/LG24 NZ4			31
1	DIRECTIONAL VALVE			4WE 10E 1X/LG24 NZ4			30
1	DIRECTIONAL VALVE			4WE 10J 1X/LG24 NZ4			29
1	DIRECTIONAL VALVE			4WE 10J 1X/LG24 NZ4			28
1	DIRECTIONAL VALVE			4WE 10E 1X/LG24 NZ4			27
1	DIRECTIONAL VALVE			4WE 10E 1X/LG24 NZ4			26
1	DIRECTIONAL VALVE			4WE 10E 1X/LG24 NZ4			25
1	DIRECTIONAL VALVE			4WE 10D 1X/LG24 NZ4			24
1	PRESSURE ADJUSTING VALVE			DBW 10B2-2X/315 U82A NZ4			23
1	DIRECTIONAL VALVE			4WE 6D 5X/AG24 NZ4			22
1	PILOTED DIRECTIONAL VALVE			4WEH 16E 3X/AG24 NZ4			21
1	DIRECTIONAL VALVE			4WE 6E 5X/AG24 NZ4			20
1	WATER VALVE			0327200		R1½"	19
1	PILOT PRESSURE BLOCK						18
1	WATER OIL COOLER	LANGER & REICH		S.0577-2.13-0030			17
2	SUCTION FILTER	UCC		UC SE 3327			16
1	RETURN FILTER	PUROLATOR		M 1900 T2	ELEMENT No: 3379		15
1	HIGH PRESSURE FILTER INSERT	HYDAC		FILTER ELEMENT	No: 00300	25µ	14
1	MANOMETER	VCC		UC-1024-160		0-160 Bar	13
1	MANOMETER SELECTION SWITCH			MS2A-2X/315			12
1	E-MOTOR	VEM		15KW 1500 rpm			11
1	COUPLING	KUPFL. TECH		ROTEX 38 GG			10
1	HYDRAULIC DOUBLE VANE PUMP	DENISON		T3 5CB 014-012-2R-00-A1			9
1	E-MOTOR	VEM		30 kW. 1500 rpm	TYPE: 160L/B35		8
1	COUPLING	KUPFL. TECH		ROTEX 42 GG			7
1	HYDRAULIC DOUBLE VANE PUMP	DENISON		T 3 3CB 014-012-2R-00-A1			6
1	PRESSURE ACCUMULATOR	HYDAC		SBT 03/Litre			5
1	PRESSURE REDUCING VALVE			DR 6DA 1-2X/150Y			4
1	DIRECTIONAL VALVE			3SE 6C 2X/630-024-NZ4			3
1	PRESSURE ADJUSTING VALVE			DBW 10B2 3X/315 U82A NZ4			2
1	PRESSURE ADJUSTING VALVE			DBW 10B2 3X/315 U82A NZ4			1

NOT FOR MANUFACTURE

REMARKS

TOTAL NET WT. (kg)

DRAWN	Z.Z. Kulkarni	REFERENCE	ALTERATIONS	DATE SIGN
CHECKED				
APPROVED				
SYDLOFFICE				
DATE	6-7-1982			

MACHINE BOOSTER BENDER — TYPE: CNC 100 DB — MN NO.

TITLE: HYDRAULIC PLAN

DRAWING NO.: O-M-12a-0651

NO OF SHEETS — SHEET NO.