COPYRIGHT AND CONFIDENTIAL
The information on this document is the property of BHARAT HEAVY ELECTRICALS LIMITED .
It must not be used directly or indirectly in any way detrimental to the interest of the company.

PURCHASE SPECIFICATION FOR RADIAL BEARING ASSEMBLY FOR CONCRETE VOLUTE TYPE CW PUMP

1.0 Scope:

This standard specifies the requirements of pad type Radial bearing assembly bearings for concrete volute type Cooling Water Pumps.

2.0 Technical Requirements:

2.1 Bearings shall be designed to meet the technical requirements detailed in cl. no. 8 and outline dimensions as per Fig. 1.

2.2 Bearing shall be oil sump lubricated.

2.3 Bearings shall be suitable for water-cooling by required number of tube coolers, fabricated with finned copper tube.

2.4 Top cover of the bearing shall of split design to facilitate easy assembly and disassembly of the bearing internals.

2.5 Bearing shall be designed in such a way that the measured temperatures are less than the following set points at design condition.

Radial pads: Alarm = 85 deg. C & Trip = 90 deg. C

2.6 Bearing shall be provided with the following accessories:

a) 1 no. platinum duplex 3 wire RTD (100 ohms at 0 deg C) for journal pad, with suitable connection.

b) RTDs shall be fitted to the bearing assembly with the help of leak proof fittings to prevent leakage of oil through the RTDs.

c) Spring fitted duplex RTDs for bearing pad metal temperature.

d) IP54 or more protection level for all RTDs.

e) Machined surface 85mm x 100mm shall be provided on bearing cover to mount vibration pickups.

f) 1 no. oil level gauge with suitable connection. Maximum and Minimum levels shall be marked on the indicator scale.

g) 1 no. air vent with suitable connection on the bearing top cover.

h) 1 no. Oil inlet

i) 1 no. oil drain connection including piping plug & valve in the base plate to drain the oil completely from the bearing.

j) 2 no.s SORF ASME class-150 flanged connections for cooling water inlet & outlet. The connections shall be fitted to avoid accidental loosening of the fittings and consequent failure of sealing between top cover and cooling coil.

k) Special tools, if any shall be supplied. One set per radial bearing assembly.

NOTES:

a) If oil level gauge is broken, oil shall not be leaked outside.

b) High and Low level mark shall be indicated on oil level gauge.

c) The temperature detecting point of the duplex RTDs shall be designed in order to measure the maximum temperature of measuring object as much as possible.

d) The position of each boss and accessories shall be indicated in the approval drawing.

e) Painting procedure shall be based on manufacturer's standard.
And BHEL will inform the outside painting color of bearing box later.

f) The list of spare parts like O-Rings or packing's etc. and list of special tools shall be submitted.

g) Punch mark shall be carried out on each side surface of base plate to prevent the assembly mistake.
Pump discharge side : PUMPS DIS
Pump suction side : PUMP SUC

COPYRIGHT AND CONFIDENTIAL
The information on this document is the property of BHARAT HEAVY ELECTRICALS LIMITED .
It must not be used directly or indirectly in any way detrimental to the interest of the company.

COPYRIGHT AND CONFIDENTIAL
The information on this document is the property of BHARAT HEAVY ELECTRICALS LIMITED .
It must not be used directly or indirectly in any way detrimental to the interest of the company.

h) Punch mark shall be carried out near the pipe connecting part to prevent the connection mistake of cooling water piping.
Inlet of cooling water : IN
Outlet of cooling water : OUT

i) Pad type: centre pivot, tilting pad type.

j) Adequate bearing lubrication shall be provided for all operating conditions. The bearing housings shall be designed to exclude the ingress of dust and water and shall have suitable provision for breathing and be adequately sealed to prevent leakage of oil. Radial bearings shall be suitable for reverse rotation and shall be suitable for continuous operation at all duties.

k) The bearing housing shall be designed to exclude the ingress of dust and water and shall have suitable provision for breathing and be adequately sealed to prevent leakage of oil.

l) The design of the bearing shall be such that the bearing performance is insensitive to small change in oil levels.

m) The bearing must be designed to permit easy filling and drainage of lubricating oil in service.

n) The cooling water piping of radial bearing shall be designed based on water analysis data. And manufacturer shall inform the mesh size of strainers if necessary.

2.7 Materials of Construction:

All materials shall be free of asbestos.
The materials of construction of the bearings shall not be inferior to the following:

Casing	:	SG Iron/Cast steel
Top cover	:	Cast steel/ Cast iron
Journal pads	:	ASTM A29 Grade 1022 with white metal
White metal on pads	:	IS: 25 Gr. 84

3.0 Drawings & Documents:

3.1 Following information shall be submitted along with technical offer:

- Allowable time without cooling water.
- Spring constant and damping co-efficient of bearing

COPYRIGHT AND CONFIDENTIAL
The information on this document is the property of BHARAT HEAVY ELECTRICALS LIMITED .
It must not be used directly or indirectly in any way detrimental to the interest of the company.

- Allowable white metal temperature for journal pad
- Power loss (kW)
- Weight of bearing assembly
- ID of thermowell, insertion length and size of threading of RTDs for journal pads.
- Position of RTDs

3.2 Following drawings / documents shall be furnished for BHEL approval / information, within 3 weeks after placement of purchase order.
5 copies of detailed dimensional / sectional assembly drawing of the bearing with all parts & accessories identified shall be submitted for BHEL approval. The following information shall be indicated on the drawing.

- Shaft diameter & collar bore, mm
- Pump speed, rpm
- Journal load, kN
- Journal surface, sq.mm
- Journal pressure, kN/sq.mm
- Journal diameter, mm
- Journal length, mm
- Journal diametrical clearance, mm
- Power loss, kW
- CW quantity required, LPH
- CW inlet temperature, deg. C
- Oil viscosity at 60 deg.C, Poise
- Oil designation, ISO VG
- Lube oil quantity
- Weight of bearing, kg
- Bearing rating (kgf)

3.3 5 copies of Quality Assurance plan of the bearing

3.4 5 copies of instruction manuals covering installation, operation and maintenance procedures of the bearing.

3.5 Soft copy of the drawings / documents mentioned at clause 3.1 to 3.3 shall be furnished in a CD.

4.0 <u>NDT Requirements:</u>

Following Non destructive tests shall be conducted:

COPYRIGHT AND CONFIDENTIAL
The information on this document is the property of BHARAT HEAVY ELECTRICALS LIMITED .
It must not be used directly or indirectly in any way detrimental to the interest of the company.

1) Ultrasonic test shall be done on the pads to ensure bonding of white metal lining as per std. HY0850174 and acceptance std. as per HY0850174.

2) Liquid penetrant examination shall be done on the pads white metal face as per std. HY0850174 and acceptance std. as per HY0850174.

3) The cooling water tubes inside the bearing shall be capable of withstanding a pressure of 10 kg/sq.cm

5.0 CERTIFICATES:

The following certificates shall be furnished in 5 copies along with consignment.

1) Compliance certificates for accessories.
2) Chemical analysis for white metal.
3) Ultrasonic test certificate for white metal bonding
4) Liquid penetrant Examination
5) Dimensional inspection report
6) Guarantee certificate for trouble free performance for 24 months from date of dispatch from supplier works or 12 months from the date of commissioning whichever is later.

6.0 MARKING:

1) Name plate containing supplier's name, model no., year of mfg and BHEL material code shall be provided on the bearing housing.

2) A tag bearing relevant 12 digit material code of BHEL shall be attached for each consignment.

7.0 PACKING:

The material shall be properly packed to ensure capability of withstanding transit risks without damages. The packing shall be sea-worthy for export orders and for specific mention in the purchase enquiry/order.

The following details shall be marked on the packing case:

1) Manufacturer's name
2) BHEL Order No. & date
3) BHEL Standard No. FP 50698/VAR No. xx
4) Net weight in Kgs

8.0 TECHNICAL REQUIREMENTS

VAR No.1			**FP9750698010**	
Pump Type			MKSV-220C	
Shaft diameter at collar(mm)			ø420	
Bearing Type			To be informed	To be determined by manufacturer
Radial load(kN)	Static	Rated	20	
		Max	120	
	Total (Static +Dynamic)	Max	405	The bearing shall not be damaged under max. load (static+dynamic) condition. In addition, this data may be confirmed again after BHEL 's analysis.
Spring Constant (Radial direction)(Under the static load condition) (N/m)		xx direction: 7.4x10^9 N/m yy direction: 4.3x10^10 N/m xy direction: To be informed yx direction: To be informed	To be informed the spring constants under rated and max static load condition.	
Damping coefficient (Radial direction) (Under the static load condition) (N s/m)		xx direction: 5.0x10^7 N-s/m yy direction: 2.9x10^8 N-s/m xy direction: To be informed yx direction: To be informed	To be informed the damping coefficients under rated and max static load conditon.	
Rotation Direction		Clockwise (view from top)	Radial bearings shall be suitable for reverse rotation	
Rotation Speed (RPM)			269	
Reverse Rotation Speed (RPM)			Approx.383	
Driver output (kW)			3,200	
Duplex RTDs (PT 100 Ω 3 wires)	Type	Spring fit	To be installed at the positions to measure the bearing pad metal temperature. Flexible tube type. Cable length: 15m	
	Protection level	IP54 or more		
Fitting Dimensions		Refer to page Fig.I		
Shaft Material		SUS 410Q		

COPYRIGHT AND CONFIDENTIAL
The information on this document is the property of BHARAT HEAVY ELECTRICALS LIMITED .
It must not be used directly or indirectly in any way detrimental to the interest of the company.

COPYRIGHT AND CONFIDENTIAL
The information on this document is the property of BHARAT HEAVY ELECTRICALS LIMITED .
It must not be used directly or indirectly in any way detrimental to the interest of the company.

VAR No.1			FP9750698010	
Cooling water (C.W.) Spec.	Cooling method		water cooling	
	Type		Clarified river water	Refer to water chemistry, C
	Capacity (m^3/hr)		2	
	Desgn temp. (°C)	C.W. Inlet	35	
		C.W. Outlet	max.45	If C.W. outlet temp. can't be satisfied, manufacturer shall inform.
	Design Pressure (MPa)		1.05	
	Hydrostatic test pressure (MPa)		1.6	Design pressure X1.5 Times.
	Pressure drop		Max.0.05 Mpa	If pressure drop can't be satisfied, manufacturer shall inform it.
	Pipe Material		Suitable to handle water handled	
Allowable limit temp. of white metal (journal pads)		To be informed	Bearing pad metal temperature shall be designed in considering the following value at the rated condition. ·ANN : 85°C ·TRIP : 90°C	
Mesh size for strainers (If required)		To be informed		
Installation direction		vertical		
Ambient temp. (°C)		42		
Mechanical Loss of Bearing (kW)		Max. 3.5	At the rated condition the mechanical loss shall be reduced as much as possible, if this requirement can't be satisfied.	
Allowable operation time without cooling water		To be informed		
Lube	Lube.Method	Oil bath		
	Lube Q'ty	To be informed		
	Lube Kind	To be informed		
	Lube max. temp.	To be informed		

COPYRIGHT AND CONFIDENTIAL
The information on this document is the property of BHARAT HEAVY ELECTRICALS LIMITED .
It must not be used directly or indirectly in any way detrimental to the interest of the company.

9.0 WATER CHEMISTRY

FOR VAR.01: FP9750698010

SR. NO.	PARAMETERS	UNITS	Raw Water Values	Clarified Water Properties	Circulating water analysis considering COC 5
1.0	pH		8.0 – 8.5	6.5	8 - 8.5
2.0	Temperature	^{0}C	22 - 30	22 - 30	32
3.0	Conductivity	µS/cm	1300	1300	6500
4.0	Colour	Hazen Units	Not Available	Not Available	Not Available
5.0	Odour		Not Available	Not Available	Not Available
6.0	Taste		Not Available	Not Available	Not Available
7.0	TDS	ppm	870	903	4515
8.0	P-Alkalinity as $CaCO_3$	ppm	Nil	Nil	Nil
9.0	M-Alkalinity as $CaCO_3$	ppm	400	400	250
10.0	T – Alkalinity as $CaCO_3$	ppm	400	400	250
11.0	Organic Matter as $KMnO_4$	ppm	50	Negligible	Negligible
12.0	Iron (as Fe)	ppm	1	1	5
13.0	Turbidity (NTU)	ppm	Clariflocculator shall be designed considering TSS : ≤ 2000 ppm. Centrifuge & thickener shall be designed considering TSS : ≤ 1000 ppm	Less than 2 NTU	Less than 10 NTU
14.0	**CATIONS**				
	(a) Ca as $CaCO_3$	ppm	295	326.5	1632.5
	(b) Mg as $CaCO_3$	ppm	77	77	385
	(c) Na as $CaCO_3$	ppm	203	203	1015
	(d) K as $CaCO_3$	ppm	10	10	50

COPYRIGHT AND CONFIDENTIAL
The information on this document is the property of BHARAT HEAVY ELECTRICALS LIMITED .
It must not be used directly or indirectly in any way detrimental to the interest of the company.

	(e) Al as CaCO3	ppm	**0**	**1.8**	**9**
	Total Cation	ppm	**585**	**618.3**	**3092.5**
15.0	**ANIONS**				
	(a) HCO_3 as $CaCO_3$	ppm	400	404.5	2022.5
	(b) Chlorides	ppm	149	176	880
	(c) SO_4 as $CaCO_3$	ppm	33	34.8	174
	(d) Fluoride as $CaCO_3$	ppm	1	1	5
	(e) Nitrate as NO_3	ppm	2	2	10
	Total Anion	ppm	**585**	**618.3**	**3092.5**
16.0	Ammonia	ppm	Absent - Traces	Absent - Traces	Absent - Traces
17.0	Silica Colloidal (as SiO_2)	ppm	< 1 (can be present in summer)	< 1 (can be present in summer)	< 5 (can be present in summer)
18.0	Silica Non - Colloidal (as SiO2)	ppm	36	36	180
19.0	Free Chlorine	ppm	Nil	Nil	Nil
20.0	Total Suspended Solids	ppm	-	-	-
21.0	Carbonates as $CaCO_3$	ppm	-	-	-
22.0	Boron	ppm	Less than One(1) ppm	Less than One(1) ppm	Less than Five(5) ppm
23.0	Oil & Grease	ppm	Nil	Nil	Nil

10.0 SPARES REQUIRED FOR RADIAL BEARING

Var. No.	Description	Material
51	Radial pads to suit material FP9750698010	FP9750698517
52	Oil level indicator to suit FP9750698010	FP9750698525
53	RTD for CV-CWP radial brg to suit FP9750698010	FP9750698533

COPY RIGHT AND CONFIDENTIAL
The information on this document is the property of BHARAT HEAVY ELECTRICALS LIMITD,
It must not be used directly or indirectly in any way detrimental to the interest of the company.

FIGURE-I

OUTLINE DIMENSIONS

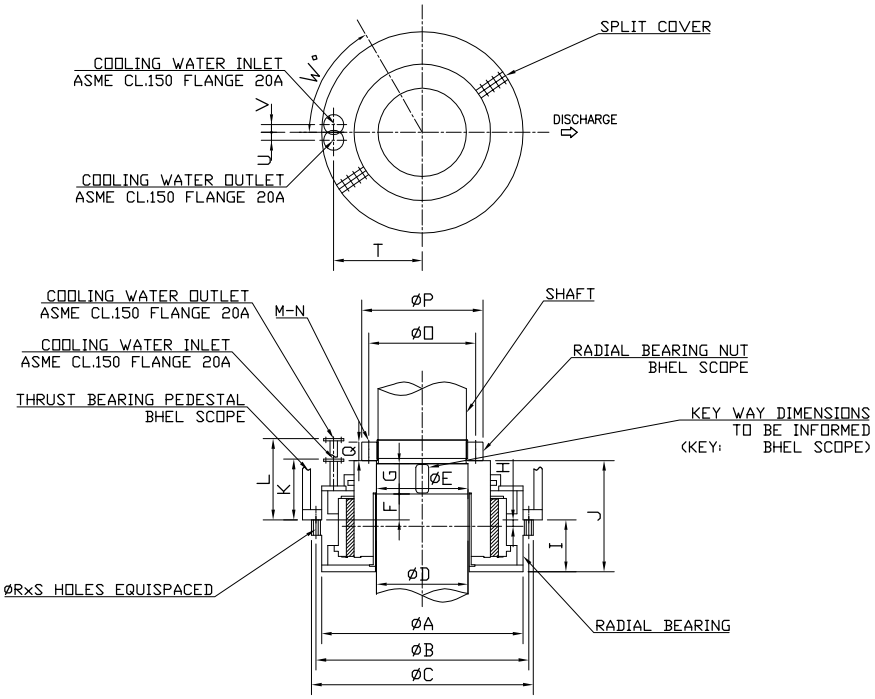

DIMENSION	VAR-01 (MKSV-220C)	DIMENSION	VAR-01 (MKSV-220C)
A	ø990	L	to be informed
B	ø1046	M	10
C	ø1090	N	ø26 (M24)
D	$ø420^{-0.1}_{-0.5}$	O	ø495
E	ø420 $H7^{+0.063}_{0}/g6^{-0.02}_{-0.06}$	P	ø565
F	126.9	Q	91
G	150	R	12
H	38	S	ø24 (M20)
I	269	T	to be informed
J	560	U	to be informed
K	to be informed	V	to be informed
KEY WAY DIMENSIONS	to be informed	W	to be informed
MOC - SHAFT: SUS410Q			
MOC - THRUST BRG. NUT: S45CH			
MOC - COOLING WATER INLET&OULET: BASED ON WATER QUALITY			

NOTE:

1) ALL DIMENSIONS ARE IN MM

RECORD OF REVISIONS

Rev. No.	Date	Revision Details	Revised By	Approved By
01	02-06-20	Revised Radial load details of Var.01	MVSS	KHRK
02	27-06-20	Revised outline dimensions of Var.01	MVSS	KHRK
03	01-07-20	Revised MOC of casing	MVSS	KHRK
04	08-07-20	Material code numbers corrected	MVSS	KHRK

COPYRIGHT AND CONFIDENTIAL
The information on this document is the property of BHARAT HEAVY ELECTRICALS LIMITED,
It must not be used directly or indirectly in any way detrimental to the interest of the company.

Ref. Doc.