DRAWING NO. 1-00-114-27570

ALL DIMENSIONS ARE IN MILLIMETRES

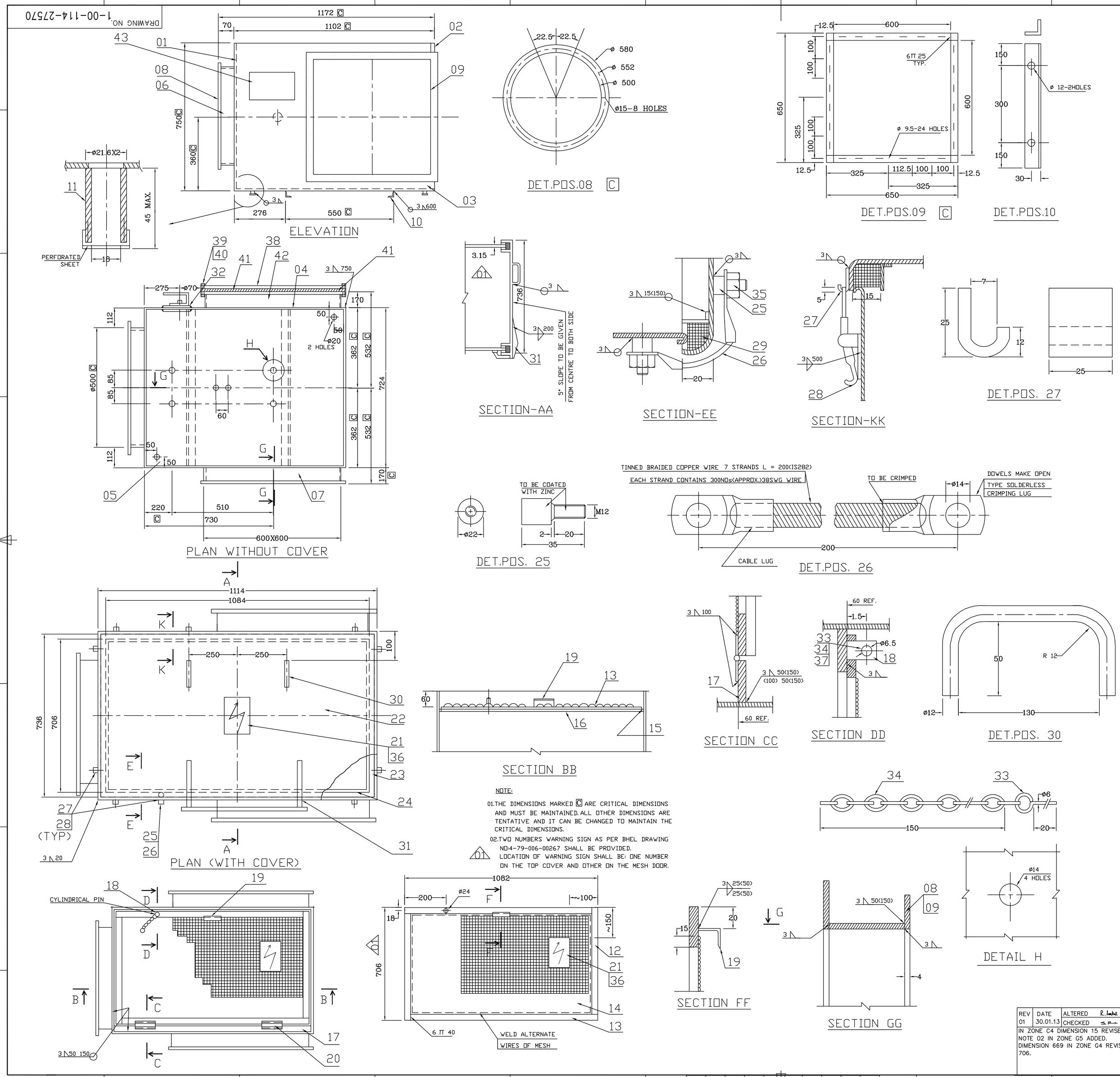


NOTE:

01. THE DIMENSIONS MARKED Ⓒ ARE CRITICAL DIMENSIONS AND MUST BE MAINTAINED. ALL OTHER DIMENSIONS ARE TENTATIVE AND IT CAN BE CHANGED TO MAINTAIN THE CRITICAL DIMENSIONS.

02. TWO NUMBERS WARNING SIGN AS PER BHEL DRAWING NO:4-79-006-00267 SHALL BE PROVIDED. LOCATION OF WARNING SIGN SHALL BE: ONE NUMBER ON THE TOP COVER AND OTHER ON THE MESH DOOR.

| VAR. NO. | ITEM NO. | DESCRIPTION | STD | DRAWING NO. | ITEM NO. / VAR. NO. | MATL CODE / MATL SPEC. | A-C | UNIT | UNIT WT. / QTY | GS | ZONE |
|---|---|---|---|---|---|---|---|---|---|---|---|
| | 43. | MANUFACTURER'S NAMEPLATE | | | | | | | 1 | | |
| | 42. | SH 3.5X166X594 | | | | | | | 0.97 | | |
| | 41. | GASKET 15MM THICK. | | | | IS 1079 63-ST 34 | | | 4 | | |
| | 40. | NUT M8 | | | | NEOPRENE | | | 0.000 | | |
| | 39. | BOLT M8X40 | | | | IS 1363-B-4 | | | 2 | | |
| | 38. | BLANKING PLATE 3.15X650X650 | | | | IS 1875 CL VI | | | 0.005 | | |
| | 37. | PVC SLEEVE FOR CHAIN | | | | NATURAL COLOUR | | | 2.4 | | |
| | 36. | SNAP HEAD RIVET 5X10 | | | | IS 2155 M.S | | | 0.021 | | |
| | 35. | NUT M12 | | | | IS 1363-B-4 | | | 2.4 | | |
| | 34. | LINK CHAIN WIRE ø 2 L=150 | | | | | | | 10.450 | | |
| | 33. | PIN ø6-40 | | | | | | | 1 | | |
| | 32. | PL. 250X300X10 | | | | IS 2062 | | | 0.050 | | |
| | 31. | HINGE | 2-79-006-00075 | | | | | | 1 | | |
| | 30. | HANDLE ROUND ø12-240 | | | | IS 1875 CL.VI | | | 0.002 | | |
| | 29. | GASKET 15X15 | | | | NEOPRENE | | | 8 | | |
| | 28. | ECCENTRIC LOCK | 2-79-006-00148 | | | | | | 0.017 | | |
| | 27. | HOOK PL.5X25X39 | | | | IS 2062 | | | 2 | | |
| | 26. | EARTHING CABLE L200 | | | | IS 282 | | | 0.010 | | |
| | 25. | BOLT ROD ø22X35 | | | | IS 1875 CL VI | | | 1 | | |
| | 24. | SH 3.15X35X1078 | | | | IS 1079-ST.34 | | | 1.100 | | |
| | 23. | SH 3.15X35X690 | | | | IS 1079-ST.34 | | | 1 | | |
| | 22. | DOOR SH 3.15X777X1155 | | | | IS 513 | | | 0.100 | | |
| | 21. | WARNING SIGN | 4-79-006-00267 | | | | | | 2 | | |
| | 20. | HINGE L100 | | | | | | | 0.550 | | |
| | 19. | L 50 50X6 L=100 | | | | IS 1079-ST.34 | | | 2 | | |
| | 18. | ROUND ø 16 L=25 | | | | IS 2062 | | | 0.300 | | |
| | 17. | PLATE 6X40X1045 | | | | IS 2062 | | | 2 | | |
| | 16. | PLATE 6X40X1065 | | | | IS 2062 | | | 18.250 | | |
| | 15. | PLATE 6X40X677 | | | | IS 2062 | | | 1 | | |
| | 14. | WIRE MESH 619X1032 THREAD ø2.5X20X20 | | | | IS 2062 | | | 0.170 | | |
| | 13. | PL.6X40X1042 | | | | IS 2062 | | | 2 | | |
| | 12. | PL.6X40X629 | | | | IS 2062 | | | 0.100 | | |
| | 11. | TUBE ø21.6X2-45 | | | | IS 1239 | | | 2 | | |
| | 10. | L50X50X6, 600 LONG | | | | IS 2062 | | | 0.450 | | |
| | 09. | FLANGE PL.6X25X630 | | | | IS 2062 | | | 1 | | |
| | 08. | FLANGE PL.6Xø580 | | | | IS 2062 | | | 1.820 | | |
| | 07. | SH-3.15X170X594 | | | | IS 1079-ST.34 | | | 1 | | |
| | 06. | SH-3.15X66X1561 | | | | IS 1079 st 34 | | | 1.070 | | |
| | 05. | SH-3.15X718X1096 | | | | IS 513 | | | 2 | | |
| | 04. | SH-3.15X747X1096 | | | | IS 513 | | | 4.650 | | |
| | 03. | SH-3.15X747X1096 | | | | IS 513 | | | 1 | | |
| | 02. | SH-3.15X609X747 | | | | IS 513 | | | 1.870 | | |
| | 01. | SH-3.15X609X747 | | | | IS 513 | | | 2 | | |

| REV | DATE | ALTERED / CHECKED |
|---|---|---|
| 01 | 30.01.13 | R.Sekar / [illegible] |

IN ZONE C4 DIMENSION 15 REVISED TO 3.15
NOTE 02 IN ZONE G5 ADDED.
DIMENSION 669 IN ZONE G4 REVISED TO 706.

CAUTION: The information on this document is the property of BHARAT HEAVY ELECTRICALS LTD. It must not be used directly or indirectly in any way detrimental to the interest of the company.

TYPE OF PRODUCT
OR NAME OF
CUSTOMER/PROJECT

BHARAT HEAVY ELECTRICALS LTD.,
UNIT: BOILER AUXILIARIES PLANT.
RANIPET – 632 406.

| | NAME | SIGN | DATE | NO.OF VAR. |
|---|---|---|---|---|
| DRN | | -sd- | 11.01.01 | - |
| CHD | R.VR | -sd- | 12.01.01 | |
| APPD | S.R | -sd- | 12.01.01 | |

| DEPT | GRADE OF UNTOL.DIM | SCALE | WEIGHT (KG). | REF. TO ASSY/OLD DRG. | ITEM NO. | NO. OF ITEMS |
|---|---|---|---|---|---|---|
| AQCS | | N.T.S | ---- | | - | - |
| CODE 862 | PR:QA:500 | | | | | |

| TITLE | CARD CODE | DRAWING NO. | REV |
|---|---|---|---|
| SWITCH BOX VAR-05 | U 01 | 1-00-114-27570 | 01 |

Size A1

DRAWING NO. 1-00-114-27571

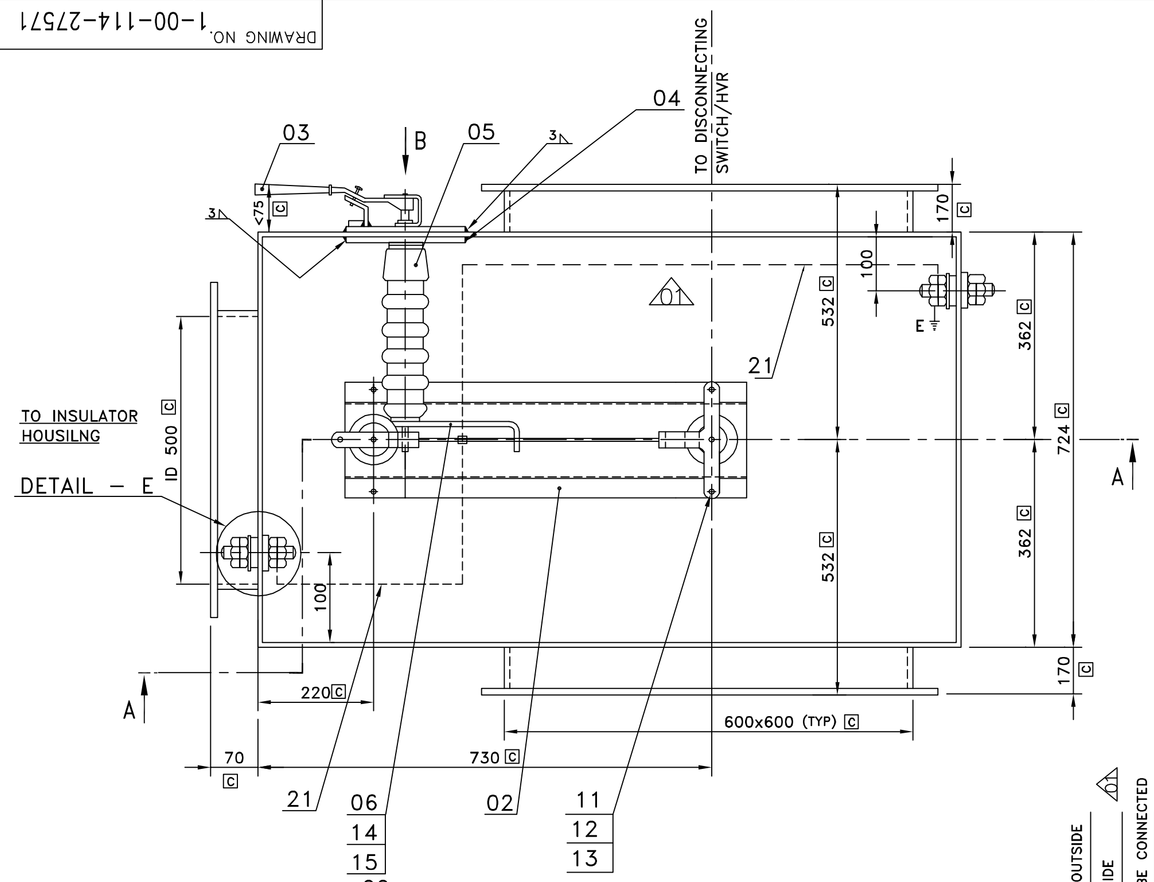


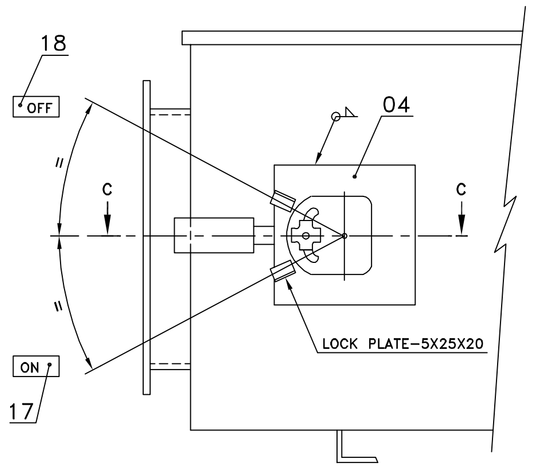


SEALING&HANDLE ARRANGEMENT IS TENTATIVE.ANY OTHER SEALING ARRANGMENT WHICH IS BETTER THAN THIS IS ALSO ACCEPTABLE, SUBJECT TO THE APROVAL BY BHEL

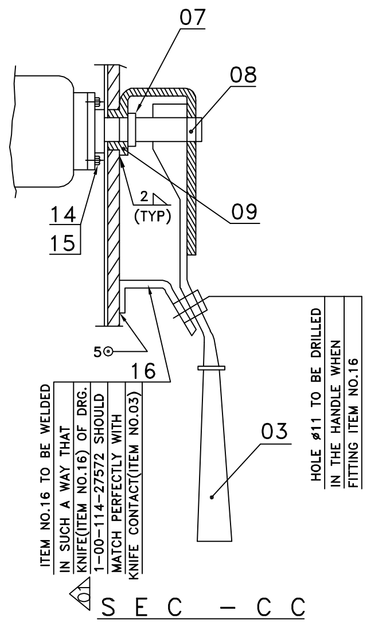


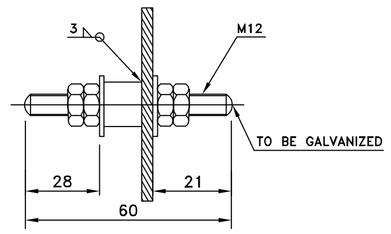


ALL DIMENSIONS ARE IN MILLIMETRES

FOR PRODUCTION
REF.-PR:QA:590 FOR PAINTING
REF.-PR:QA:500 FOR UNTOL. DIMNS.

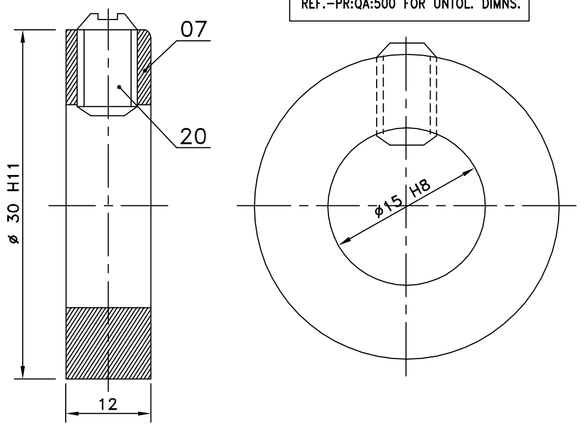


## NOTE

01.PACKING DETAILS SHALL BE FURNISHED FOR BAP REVIEW/ APPROVAL.
02.SWITCH ENCLOSURE SHALL BE SUITABLE FOR IP 55 DEGREE OF PROTECTION.
03.COLOUR SHALL BE EPOXY TO SHADE 631 OF IS 5 FINISH.DOUBLE COATING OF OUTER FINISH SHOULD BE GIVEN AFTER RED OXIDE PRIMER TREATMENT.
04.THE IMPULSE VOLTAGE LEVEL SHALL BE 170KV PEAK (BOTH +VE & –VE).
05.THE DIMENSIONS MARKED C ARE CRITICAL AND MUST BE MAINTAINED. ALL OTHER DIMENSIONS ARE TENTATIVE AND IT CAN BE CHANGED TO MAINTAIN THE CRITICAL DIMENSIONS.
06.ALL SUB-VENDOR DRAWINGS ARE SUBJECT TO BHEL APPROVAL.
07.SUPPLIER NAME PLATE SHALL GIVE ALL DETAILS OF : a) NAME OF THE SUPPLIER , b) SL. NO, c) VAR. NO, d)YEAR OF MANUFACTURE AND e) ADDRESS.
08.NAME PLATE SHALL BE OF ANODISED ALUMINIUM AND IT SHOULD BE FIXED SUITABLY.

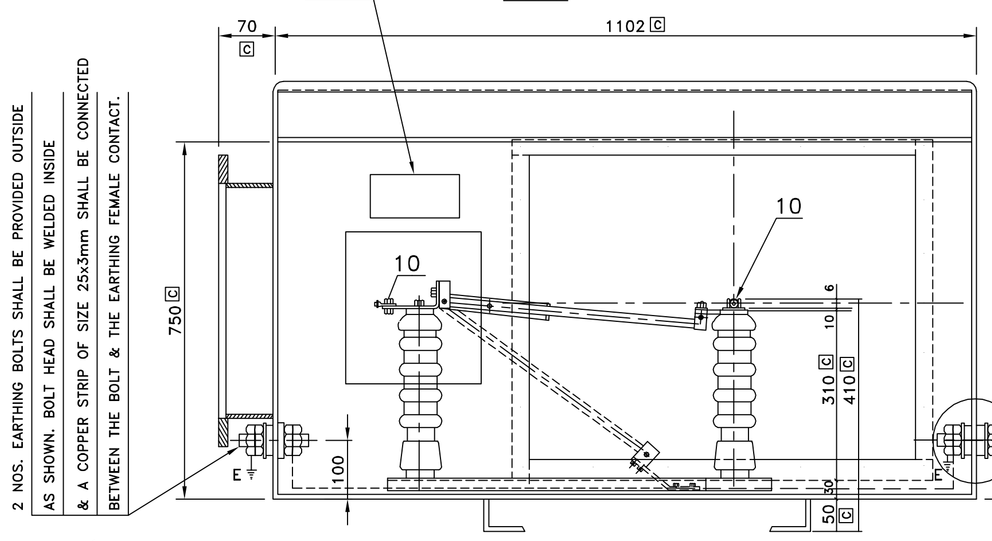


2 NOS. EARTHING BOLTS SHALL BE PROVIDED OUTSIDE AS SHOWN. BOLT HEAD SHALL BE WELDED INSIDE & A COPPER STRIP OF SIZE 25x3mm SHALL BE CONNECTED BETWEEN THE BOLT & THE EARTHING FEMALE CONTACT.

2 NOS. EARTHING BOLTS SHALL BE PROVIDED OUTSIDE AS SHOWN. BOLT HEAD SHALL BE WELDED INSIDE & A COPPER STRIP OF SIZE 25x3mm SHALL BE CONNECTED BETWEEN THE BOLT & THE EARTHING FEMALE CONTACT.

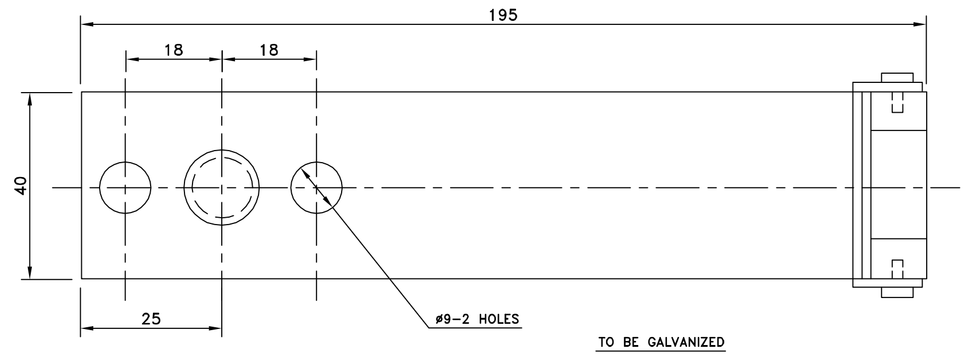


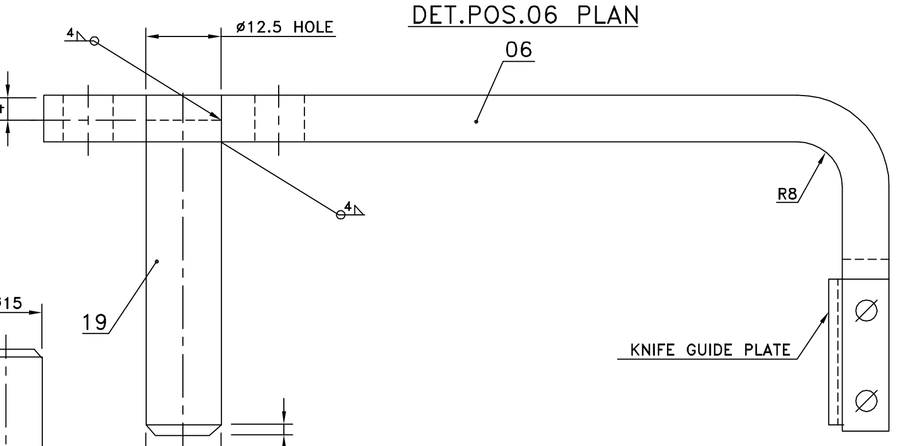


NOTE: TO BE BRIGHTLY NICKEL PLATED (THICKNESS: 10 MICRONS).

DET.POS. 06 ELEVATION

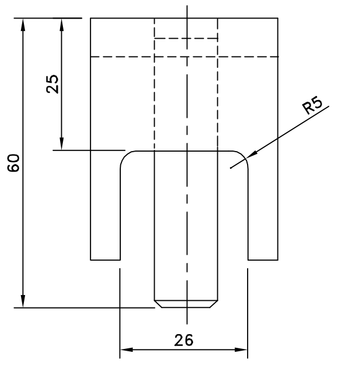


DET.POS. 06 SIDE VIEW

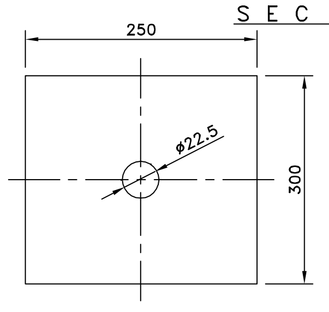


DET.POS. 04

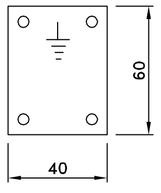


EARTH PLATE

NOTE: ENGRAVE THE SYMBOL

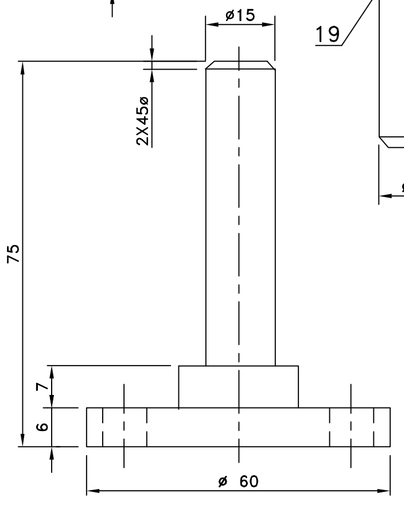


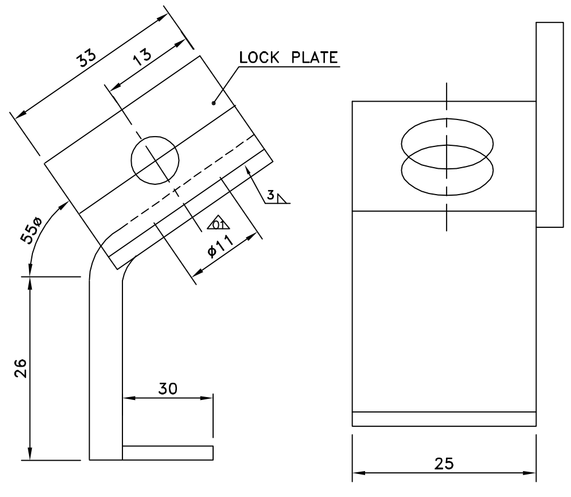


DET.POS. 16

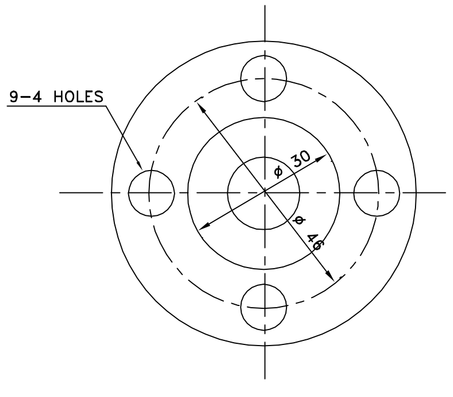


DET.POS. 08

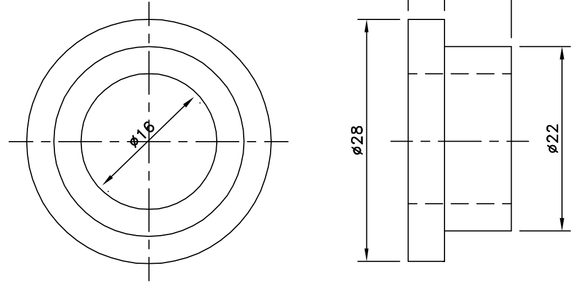


DET.POS. 09

| VAR. NO. | ITEM NO. | DESCRIPTION | STD | DRAWING NO. | ITEM NO. / VAR. NO. | MATL CODE / MATL SPEC. | A C I | UNIT | UNIT WT. / QTY | GS | ZONE |
|---|---|---|---|---|---|---|---|---|---|---|---|
| | 22. | MANUFACTURER NAME PLATE | | | | | | | 1 | | |
| △1 | 21. | COPPER STRIP 25x3mm | | | | | | | 0.723 | △1 | |
| | 20. | GRUB SCREW M6X6 | | | | IS 2388-P-6.6 | | | 2 / 0.002 | | |
| | 19. | ROUND ø 12-56 | | | | IS 2062 | | | 1 / 0.050 | | |
| | 18. | ENGRAVED METAL NAME PLATE – 'OFF' | | | | | | | 1 / 0.001 | | |
| | 17. | ENGRAVED METAL NAME PLATE – 'ON' | | | | | | | 1 / 0.001 | | |
| | 16. | LOCK PL. 5X25X55 | | | | IS 2062 | | | 1 / 0.063 | | |
| | 15. | WASHER M8 | | | | IS 2016 | | | 2 / 0.002 | | |
| | 14. | SCREW M8X16 | | | | IS 1363-B-4.6 | | | 6 / 0.012 | | |
| | 13. | WASHER M12 | | | | IS 2016 | | | 6 / 0.006 | | |
| | 12. | NUT M12 | | | | IS 1363-B-4.6 | | | 7 / 0.017 | | |
| | 11. | SCREW M12X22 | | | | IS 1363-B-4.6 | | | 4 / 0.035 | | |
| | 10. | CONNECTING SCREW | | 1-79-006-00068 | | STYLE 02 | | | 4 / 0.113 | | |
| | 09. | BUSHING ROUND ø28-11 | | | | IS 306 GR.G2 / COMM. BRASS | | | 3 / 0.700 | | |
| | 08. | PIVOT ROUND ø60-75 | | | | IS 1875 CL VI | | | 1 / 1.840 | | |
| | 07. | SET RING 15 PL.12-35ø | | | | IS 2062 | | | 1 / 0.041 | | |
| | 06. | LEVER PL.8X40X231 | | | | IS 2062 | | | 4 / 0.600 | | |
| | 05. | PIN INSULATOR | | 3-79-006-00100 | | 96-150-132 | | | 1 / 5.000 | | |
| | 04. | PL. 10X250X300 | | | | IS 2062 | | | 3 / 1.900 | △1 | |
| | 03. | HAND LEVER | | 2-79-006-00149 | | | | | 1 / 1.290 | | |
| | 02. | DISCONNECTING SWITCH | | | | | | | 1 / 16.840 | | |
| | 01. | SWITCH BOX STYLE-05 | | 1-00-114-27570 | | | | | 1 / 151.330 | | |
| | | | | | | | | | 1 | | |

| REV | DATE | ALTERED | |
|---|---|---|---|
| 01 | 30.01.13 | CHECKED | |

01.QTY OF ITEM NO 05 REVISED FROM 1 TO 3.
02.QTY OF ITEM NO 21 INDICATED AS 2.
03.IN ZONE B2 COPPER WIRE SHOWN FOR SECOND EARTH POINT.

CAUTION: The information on this document is the property of BHARAT HEAVY ELECTRICALS LTD. It must not be used directly or indirectly in any way detrimental to the interest of the company.

TYPE OF PRODUCT
OR NAME OF
CUSTOMER/PROJECT

BHARAT HEAVY ELECTRICALS LTD.,
UNIT: BOILER AUXILIARIES PLANT.
RANIPET – 632 406.

| | NAME | SIGN | DATE | NO.OF VAR. |
|---|---|---|---|---|
| DRN | | –sd– | 11.01.01 | |
| CHD | R.VR | –sd– | 12.01.01 | – |
| APPD | S.R | –sd– | 13.01.01 | |

| DEPT | GRADE OF UNTOL.DIM | SCALE | WEIGHT (KG). | REF. TO ASSY/OLD DRG. | ITEM NO. | NO. OF ITEMS |
|---|---|---|---|---|---|---|
| AQCS | | N.T.S | ---- | | – | – |
| CODE 862 | PR:QA:500 | | | | | |

TITLE: DISCONNECTING SWITCH ASSEMBLY VAR-05

CARD CODE: U 01

DRAWING NO. 1-00-114-27571 REV 01

Size A1

DRAWING NO. 1-00-114-27572

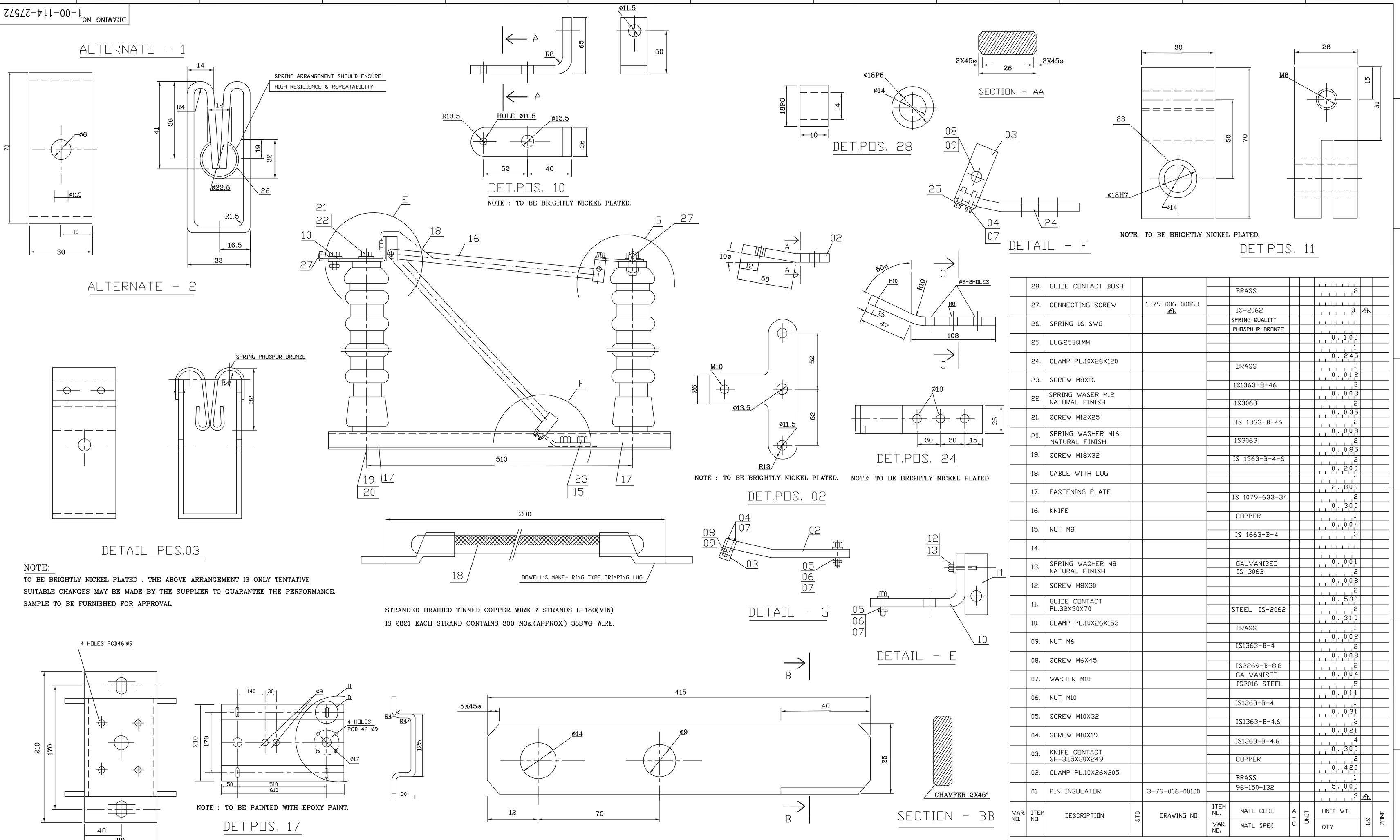


NOTE:

TO BE BRIGHTLY NICKEL PLATED . THE ABOVE ARRANGEMENT IS ONLY TENTATIVE SUITABLE CHANGES MAY BE MADE BY THE SUPPLIER TO GUARANTEE THE PERFORMANCE. SAMPLE TO BE FURNISHED FOR APPROVAL.

| VAR. NO. | ITEM NO. | DESCRIPTION | STD | DRAWING NO. | ITEM NO. / VAR. NO. | MATL CODE / MATL SPEC. | A-C | UNIT | UNIT WT. / QTY | GS | ZONE |
|---|---|---|---|---|---|---|---|---|---|---|---|
| | 28. | GUIDE CONTACT BUSH | | | | BRASS | | | 2 | | |
| | 27. | CONNECTING SCREW | | 1-79-006-00068 △1 | | IS-2062 | | | 3 △1 | | |
| | 26. | SPRING 16 SWG | | | | SPRING QUALITY PHOSPHUR BRONZE | | | 0.100 | | |
| | 25. | LUG:25SQ.MM | | | | | | | 1 | | |
| | 24. | CLAMP PL.10X26X120 | | | | BRASS | | | 0.245 | | |
| | 23. | SCREW M8X16 | | | | | | | 1 | | |
| | 22. | SPRING WASER M12 NATURAL FINISH | | | | IS1363-8-46 | | | 0.012 | | |
| | | | | | | IS3063 | | | 3 | | |
| | 21. | SCREW M12X25 | | | | | | | 0.003 | | |
| | 20. | SPRING WASHER M16 NATURAL FINISH | | | | IS 1363-B-46 | | | 2 | | |
| | 19. | SCREW M18X32 | | | | IS3063 | | | 0.035 | | |
| | 18. | CABLE WITH LUG | | | | IS 1363-B-4-6 | | | 2 | | |
| | 17. | FASTENING PLATE | | | | | | | 0.008 | | |
| | 16. | KNIFE | | | | IS 1079-633-34 | | | 2 | | |
| | 15. | NUT M8 | | | | COPPER | | | 0.085 | | |
| | 14. | | | | | IS 1663-B-4 | | | 2 | | |
| | 13. | SPRING WASHER M8 NATURAL FINISH | | | | | | | 0.200 | | |
| | 12. | SCREW M8X30 | | | | GALVANISED IS 3063 | | | 1 | | |
| | 11. | GUIDE CONTACT PL.32X30X70 | | | | | | | 2.800 | | |
| | 10. | CLAMP PL.10X26X153 | | | | IS 1079-633-34 | | | 2 | | |
| | 09. | NUT M6 | | | | | | | 0.300 | | |
| | 08. | SCREW M6X45 | | | | COPPER | | | 1 | | |
| | 07. | WASHER M10 | | | | | | | 0.004 | | |
| | 06. | NUT M10 | | | | IS 1663-B-4 | | | 3 | | |
| | 05. | SCREW M10X32 | | | | | | | 0.001 | | |
| | 04. | SCREW M10X19 | | | | GALVANISED IS 3063 | | | 2 | | |
| | 03. | KNIFE CONTACT SH-3.15X30X249 | | | | | | | 0.008 | | |
| | 02. | CLAMP PL.10X26X205 | | | | | | | 2 | | |
| | 01. | PIN INSULATOR | | 3-79-006-00100 | | STEEL IS-2062 | | | 0.530 | | |
| | | | | | | | | | 2 | | |
| | | | | | | | | | 0.310 | | |
| | | | | | | BRASS | | | 1 | | |
| | | | | | | | | | 0.002 | | |
| | | | | | | IS1363-B-4 | | | 2 | | |
| | | | | | | | | | 0.008 | | |
| | | | | | | IS2269-B-8.8 | | | 2 | | |
| | | | | | | GALVANISED IS2016 STEEL | | | 0.004 | | |
| | | | | | | | | | 5 | | |
| | | | | | | | | | 0.011 | | |
| | | | | | | IS1363-B-4 | | | 1 | | |
| | | | | | | | | | 0.031 | | |
| | | | | | | IS1363-B-4.6 | | | 3 | | |
| | | | | | | | | | 0.021 | | |
| | | | | | | IS1363-B-4.6 | | | 4 | | |
| | | | | | | | | | 0.300 | | |
| | | | | | | COPPER | | | 2 | | |
| | | | | | | | | | 0.420 | | |
| | | | | | | BRASS | | | 1 | | |
| | | | | | | 96-150-132 | | | 5.000 | | |
| | | | | | | | | | 3 △1 | | |

CAUTION: The information on this drawing is the property of BHARAT HEAVY ELECTRICALS LTD. It must not be used directly or indirectly in any way detrimental to the interest of the company.

TYPE OF PRODUCT
OR NAME OF
CUSTOMER/PROJECT

BHARAT HEAVY ELECTRICALS LTD.,
UNIT: BOILER AUXILIARIES PLANT.
RANIPET - 632 406.

| | NAME | SIGN | DATE | NO. OF VAR. |
|---|---|---|---|---|
| DRN | | -sd- | 11.01.01 | - |
| CHD | R.VR | -sd- | 12.01.01 | |
| APPD | S.R | -sd- | 13.01.01 | |

| DEPT | GRADE OF UNTOL DIM | SCALE | WEIGHT (KG). | REF. TO ASSY/OLD DRG. | ITEM NO. | NO. OF ITEMS |
|---|---|---|---|---|---|---|
| AQCS | | N.T.S | ---- | | - | - |
| CODE 862 | PR:QA:500 | | | | | |

TITLE: DISCONNECTING SWITCH ASSEMBLY VAR-05

CARD CODE: U 01

DRAWING NO. 1-00-114-27572

REV 01

| REV | DATE | ALTERED / CHECKED |
|---|---|---|
| 01 | 30.01.13 | R.Sankar / S.R |

01.QTY OF ITEM NO 01 REVISED FROM 2 TO 3.
02.QTY OF ITEM NO 27 INDICATED AS 3.

Size A1

DRAWING NO.

ALL DIMENSIONS ARE IN MILLIMETRES

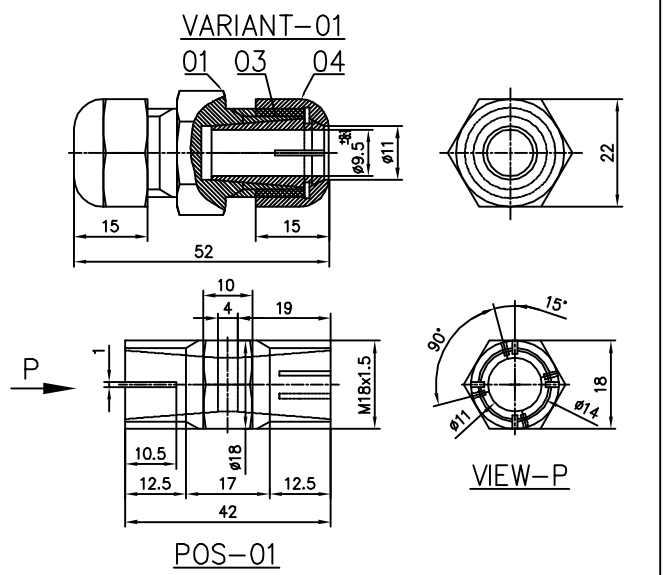


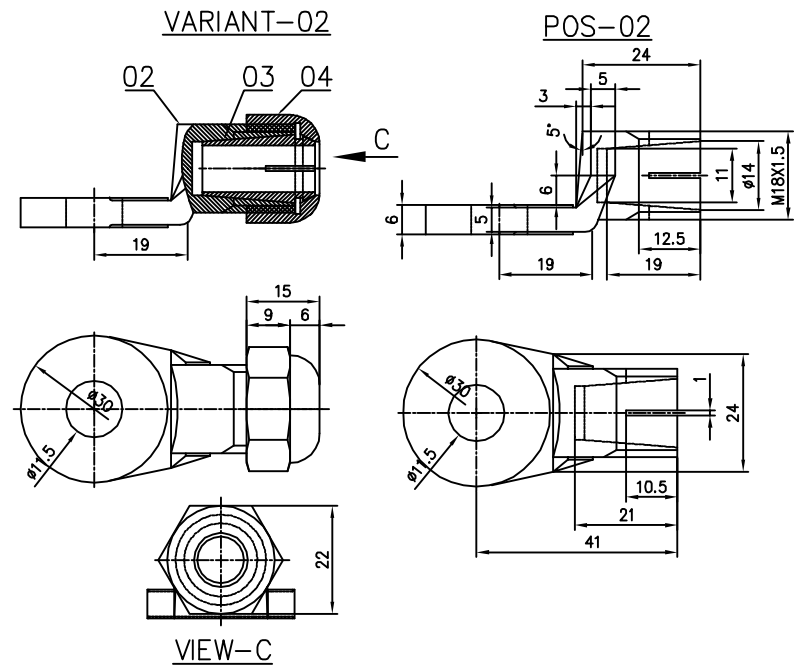


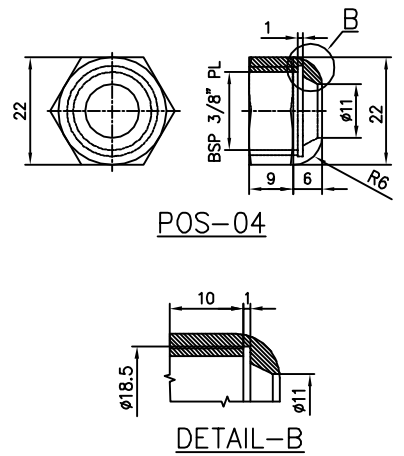


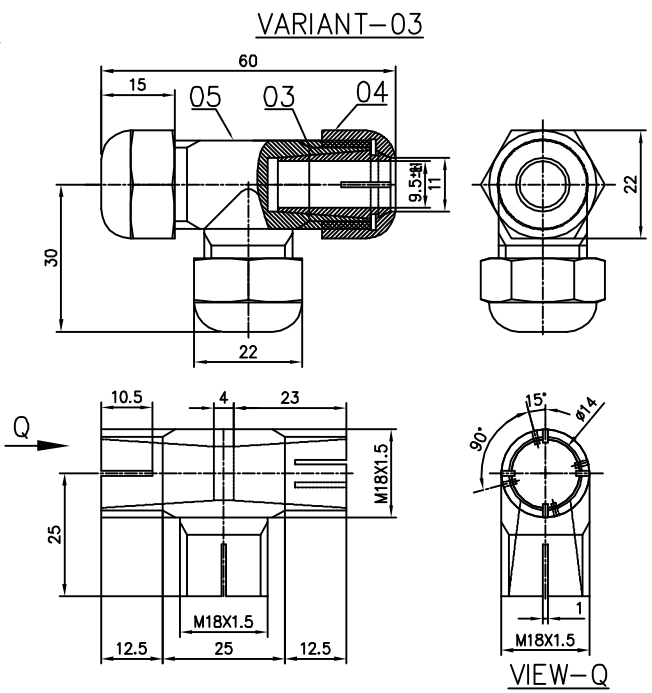


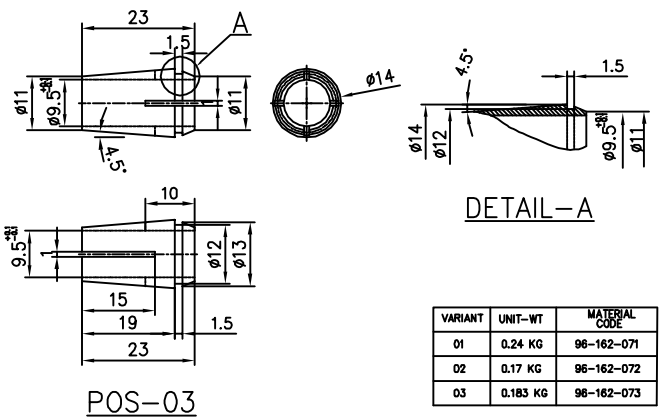


NOTES:-

SURFACE TO BE FINISHED BY NICKEL PLATING OF TH 40 $\mu$.

| VARIANT | UNIT-WT | MATERIAL CODE |
|---|---|---|
| 01 | 0.24 KG | 96-162-071 |
| 02 | 0.17 KG | 96-162-072 |
| 03 | 0.183 KG | 96-162-073 |

| VARIANT NO | ITEM NO | DESCRIPTION | STD | DRAWING NO. | ITEM NO | MATL. CODE / MATL. SPEC | A / C | DI | UNIT | UNIT WT. / QUANTITY | DI | ZONE |
|---|---|---|---|---|---|---|---|---|---|---|---|---|
| | 05 | TEE | | | | LEADED BRASS | | | | | | |
| | 04 | ADAPTOR | | | | | | | | 0.060 | | |
| 03 | 03 | SLEEVE | | | | AS PER | | | | 3 | | |
| | 04 | ADAPTOR | | | | IS 3488-86/ | | | | 0.020 | | |
| | 03 | SLEEVE | | | | BS 2847 CZ 122 | | | | 3 | | |
| 02 | 02 | LUG | | | | BS 2847 CZ 122 | | | | 0.050 | | |
| | 04 | ADAPTOR | | | | BS 2847 CZ 122 | | | | 1 | | |
| | 03 | SLEEVE | | | | BS 2847 CZ 122 | | | | 0.020 | | |
| 01 | 01 | UNION SCREW | | | | 96 162 071 | | | | 2 | | |
| | | | | | | BS 2847 CZ 122 | | | | 0.100 | | |
| | | | | | | | | | | 1 | | |

| REV | DATE | ALTERED | | | REV | DATE | ALTERED | | | REV | DATE | ALTERED | | | REV | DATE | ALTERED | | |
|---|---|---|---|---|---|---|---|---|---|---|---|---|---|---|---|---|---|---|---|
| 07 | 10.03.2012 | CHECKED | C.Ganesh | | 06 | 20.03.1996 | CHECKED | S.Rangarajan | | 05 | 28.06.1993 | CHECKED | | -SD- | | | | | |
| ZONE | Retraced in AutoCAD | | | | ZONE | Nickel plating thickness altered from 40microns to 15 microns | | | | ZONE | SPECIFICATION NUMBER CHANGED | | | | | | | | |

| REV | DATE | ALTERED | | | REV | DATE | ALTERED | | | REV | DATE | ALTERED | | | REV | DATE | ALTERED | | |
|---|---|---|---|---|---|---|---|---|---|---|---|---|---|---|---|---|---|---|---|
| 04 | 08.09.1990 | CHECKED | | -SD- | 03 | 06.03.1989 | CHECKED | | -SD- | 02 | 20.09.1984 | CHECKED | GM | -SD- | 01 | 08.11.1983 | CHECKED | GM | -SD- |
| ZONE | MATERIAL SPECIFICATION CHANGED | | | | ZONE | VARIANT-03 ADDED CHROMIUM PLATING CHANGED TO NICKEL PLATING | | | | ZONE | POS 01 & 03 INTERNAL PARALLEL BORE CHANGED TO TAPER, M16 THREAD CHANGED TO M18X1.5 AND PROVISION FOR SPANNER HOLD. | | | | ZONE | NOTES CORRECTED | | | |

CAUTION: The information on this drawing is the property of BHARAT HEAVY ELECTRICALS LTD. It may not be used directly or indirectly in any way detrimental to the interest of the company.

TYPE OF PRODUCT OR NAME OF CUSTOMER/PROJECT: ELECTROSTATIC PRECIPITATOR

BHARAT HEAVY ELECTRICALS LTD.
UNIT: BOILER AUXILIARIES PLANT.
RANIPET - 632 406.

| | NAME | SIGN | DATE | NO. OF VAR. |
|---|---|---|---|---|
| DRN | G.M.NATHAN | | 08.08.1988 | |
| CHD | G.M | | 27.12.1988 | |
| APPD | G.S | | 27.12.1988 | |

| DEPT/ACCS | GRADE OF UNTOL.DIM | SCALE | WEIGHT (KG) | REF. TO ASSY/OLD DRG. | ITEM NO. | NO. OF ITEMS |
|---|---|---|---|---|---|---|
| CODE 862 | C / M / F | N.T.S | | | - | |

| TITLE | CARD CODE | DRAWING NO. | REV |
|---|---|---|---|
| CONNECTING SCREW<br>VARIANT-01,VARIANT-02 & VARIANT-03 | U 01 | 1-79-006-00068 | 07 |

Size A1

FIRST ANGLE PROJECTION (ALL DIMENSIONS IN MILLIMETRES)

DRAWING NO 2-79-006-00075/02

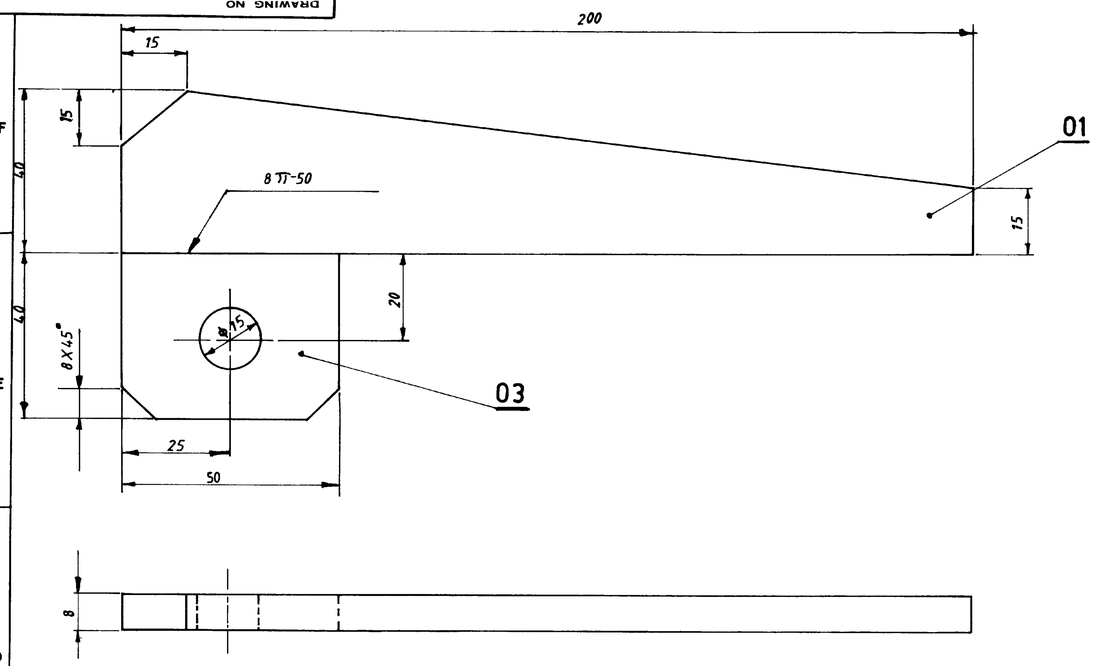


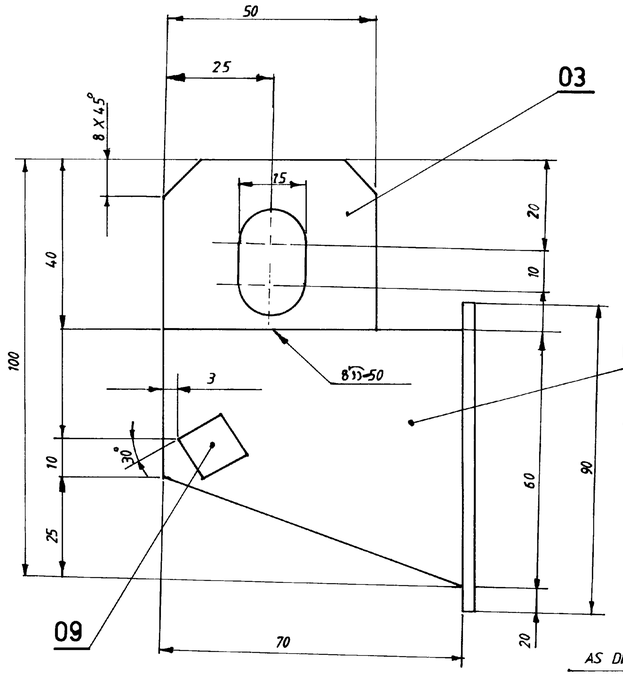


| TYPE OF WELD | ELECT SPECN | LENGTH OF WELD |
|---|---|---|
| 8 ⌒ | E-6013 | 0,2m |
| 5 ◺ | E-6013 | 0,5m |

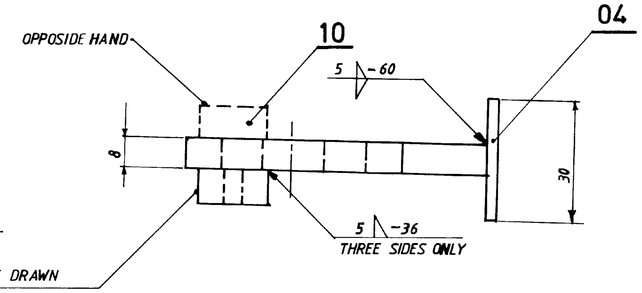


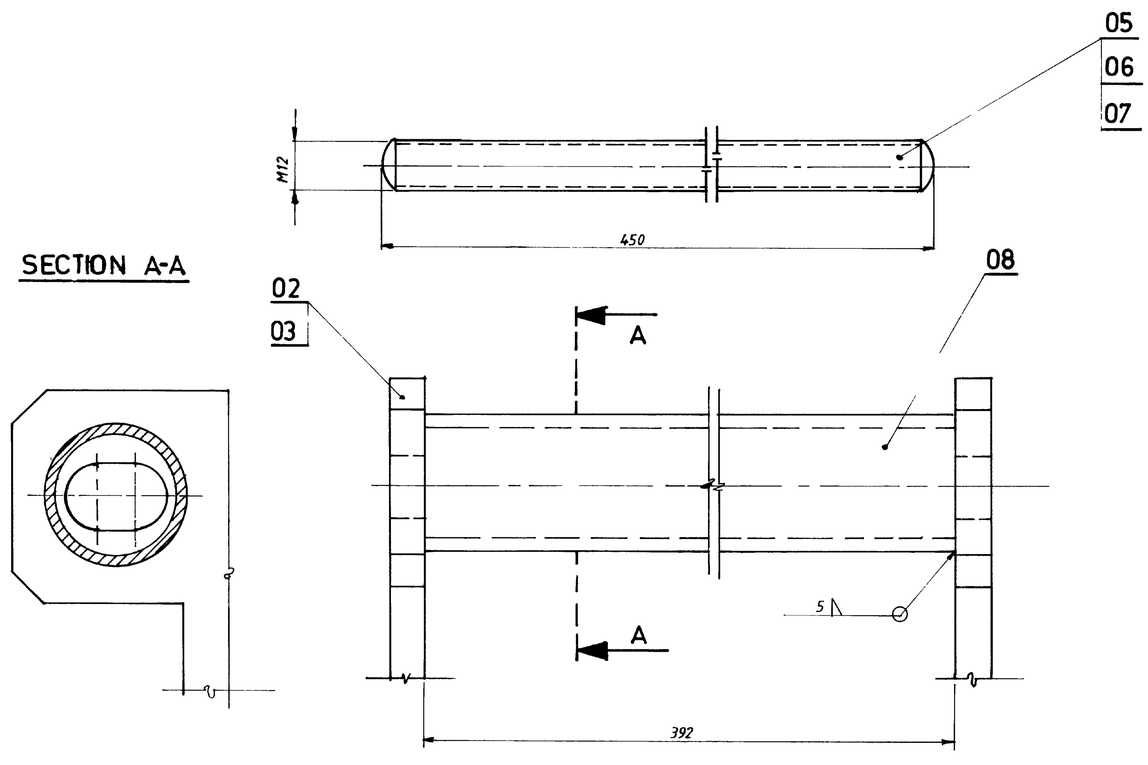


| VARIANT NO | ITEM NO. | DESCRIPTION | STD | DRAWING NO | ITEM NO. / VAR NO. | MATL. CODE / MATL SPEC. | A / C | UNIT | UNIT WT. / QTY | GS | ZONE |
|---|---|---|---|---|---|---|---|---|---|---|---|
| | 10 | PLATE 8X12X12 | | | | IS-226- | | | 0,01 / 1 | | |
| | 09 | PLATE-8X12X12 | | | | IS-226- | | | 0,01 / 1 | | |
| | 08 | TUBE Ø33.7X3,25-392 LONG | | | | IS-1161- YST 22 | | | 0,79 / 1 | | |
| | 07 | NUT-M12 | | | | IS 363-B-4 | | | 0,017 / 2 | | |
| | 06 | WASHER-M12 | | | | IS 2016 | | | 0,065 / 2 | | |
| | 05 | ROUND Ø 16-450 | | | | IS-2062- | | | 0,70 / 1 | | |
| | 04 | PLATE-5X30X90 | | | | IS 226- | | | 0,1 / 2 | | |
| | 03 | PLATE-8X40X50 | | | | IS-226- | | | 0,13 / 4 | | |
| | 02 | PLATE-8X60X70 | | | | IS-226- | | | 0,26 / 2 | | |
| | 01 | PLATE 8X40X200 | | | | IS-226- | | | 0,5 / 2 | | |

| REV | DATE | ALTERED / CHECKED |
|---|---|---|
| 02 | 20.6.93 | ALT. / CHD. |

IS NUMBER'S YEAR DELETED.
SPECIFICATIONS NUMBER DELETED.

| REV | DATE | ALTERED / CHECKED |
|---|---|---|
| 01 | | |

ZONE

TYPE OF PRODUCT OR NAME OF CUSTOMER/PROJECT: ELECTROSTATIC PRECIPITATOR

Bharat Heavy Electricals Ltd., BOILER AUXILIARIES PROJECT RANIPET 632 406

| | NAME | SIGN | DATE | NO. OF VAR |
|---|---|---|---|---|
| DRN | M BOOPATHY | | 16.02.85 | |
| CHD | S J P | | 16 02 85 | |
| APPD | B GOVIDAN | | 16 02 85 | |

| DEPT | GRADE OF UNTOL DIM | SCALE | WEIGHT (kg) | REF TO ASSY / OLD DRG | ITEM NO. |
|---|---|---|---|---|---|
| CODE 862 | C/MIP | 1:1 | 393 | | |

| TITLE | CARD CODE | DRAWING NO | REV. |
|---|---|---|---|
| HINGE | U 01 | 2-79-006-00075 | 02 |

RE-TRACED

CAUTION THE INFORMATION ON THIS DOCUMENT IS THE PROPERTY OF BHARAT HEAVY ELECTRICALS LTD. IT MUST NOT BE USED DIRECTLY OR INDIRECTLY IN ANY WAY DETRIMENTAL TO THE INTEREST OF THE COMPANY

R: 05-228 C

FIRST ANGLE PROJECTION (ALL DIMENSIONS IN MILLIMETRES)

DRAWING No. 2-79-006-00148

CAUTION
THE INFORMATION ON THIS DOCUMENT IS THE PROPERTY OF BHARAT HEAVY ELECTRICALS LTD. IT MUST NOT BE USED DIRECTLY OR INDIRECTLY IN ANY WAY DETRIMENTAL TO THE INTEREST OF THE COMPANY.

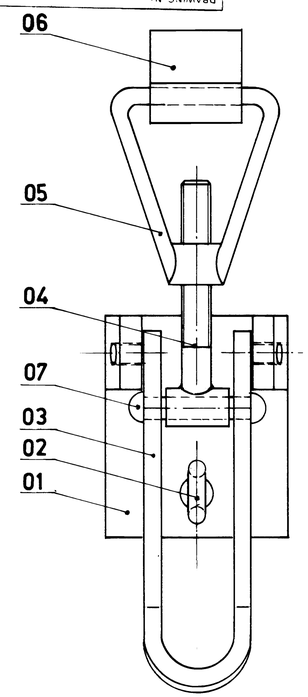


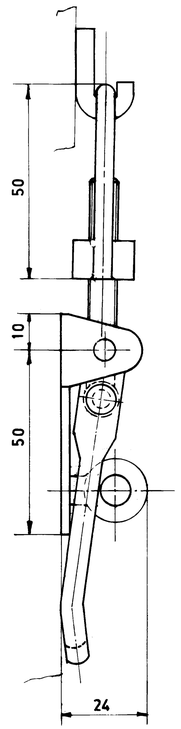


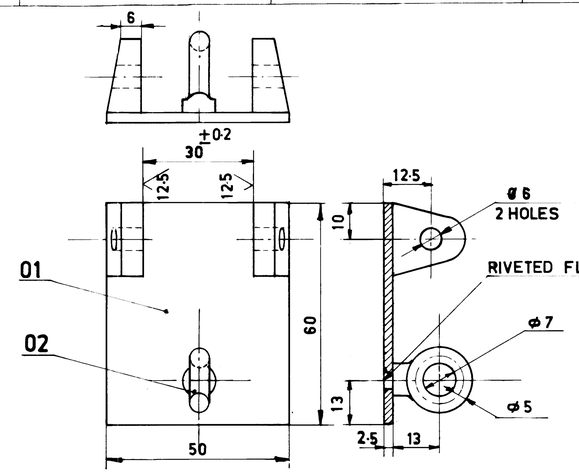


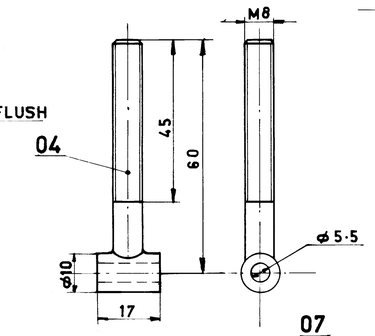


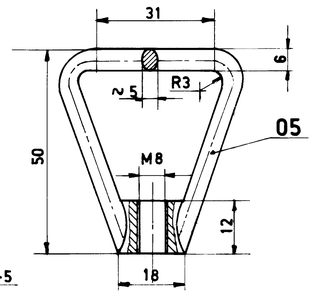


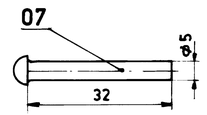


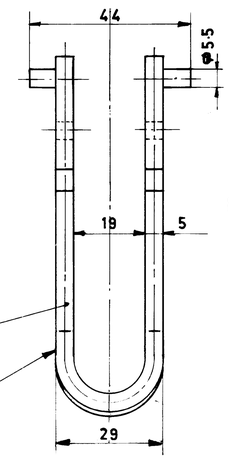


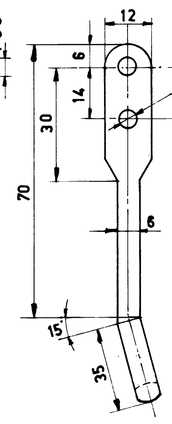


REF : PRQA : 590 FOR PAINTING
REF : PRQA : 500 FOR UNTOL. DIMNS

NOTE:- SUITABLE SURFACE TREATMENT SHALL BE DONE TO PREVENT RUSTING

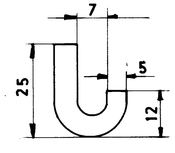


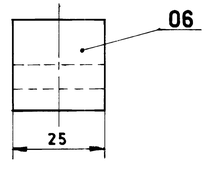


| VARIANT NO. | ITEM NO. | DESCRIPTION | STD | DRAWING NO. | ITEM NO. / VAR NO. | MATL CODE / MATL SPEC | A C | UNIT | UNIT WT / QTY | GS | ZONE |
|---|---|---|---|---|---|---|---|---|---|---|---|
| | 07 | RIVET ø5 -32 | | FORGING | | IS 226/62 | | | 0.0.20 / 1 | | D 2 |
| | 06 | HOOK | | FORGING | | IS 226/62 | | | 0.0.30 / 1 | | A 5 |
| | 05 | CLAMP | | FORGING | | IS 226/62 | | | 0.0.30 / 1 | | E 1 |
| | 04 | EYE BOLT | | FORGING | | IS 226/62 | | | 0.0.40 / 1 | | E 3 |
| | 03 | LINK ROD 12X5-250 | | FORGING | | IS 226/62 | | | 0.1.2 / 1 | | D 5 |
| | 02 | EYE | | FORGING | | IS 226/62 | | | 0.0.40 / 1 | | E 5 |
| | 01 | BRACKET | | FORGING | | IS1079-63ST 34 | | | 0.0.80 / 1 | | E 5 |

TYPE OF PRODUCT OR NAME OF CUSTOMER/PROJECT

**Bharat Heavy Electricals Ltd.,**
BOILER PLANT UNIT
TIRUCHIRAPALLI-620 014

| | NAME | SIGN | DATE |
|---|---|---|---|
| DRN | M. NATRAJ | | 18.10.81 |
| CHD | S.M.N | | |
| APPD | G.S | | 20.10.81 |

NO. OF VAR

| REV | DATE | ALTERED / CHECKED |
|---|---|---|
| 01 | | |

ZONE

DEPT: AQCS
CODE: 250
GRADE OF UNTOL. DIM: -e/M/+
SCALE: 1:1
WEIGHT (kg): 0·38
REF TO ASSY / OLD DRG
ITEM NO.

TITLE: ECCENTRIC LOCK
CARD CODE: U 01
DRAWING NO.: 2-79-006-00148
REV: 00

Size A2

05-228/C

DRAWING NO. 2-79-006-00149

ALL DIMENSIONS ARE IN MILLIMETRES

FOR PRODUCTION
REF. PR:QA:590 FOR PAINTING
REF. PR:QA:500 FOR UNTOL. DIMNS.
REF. APPLICABLE GMS FOR MATCODE&SPEC.

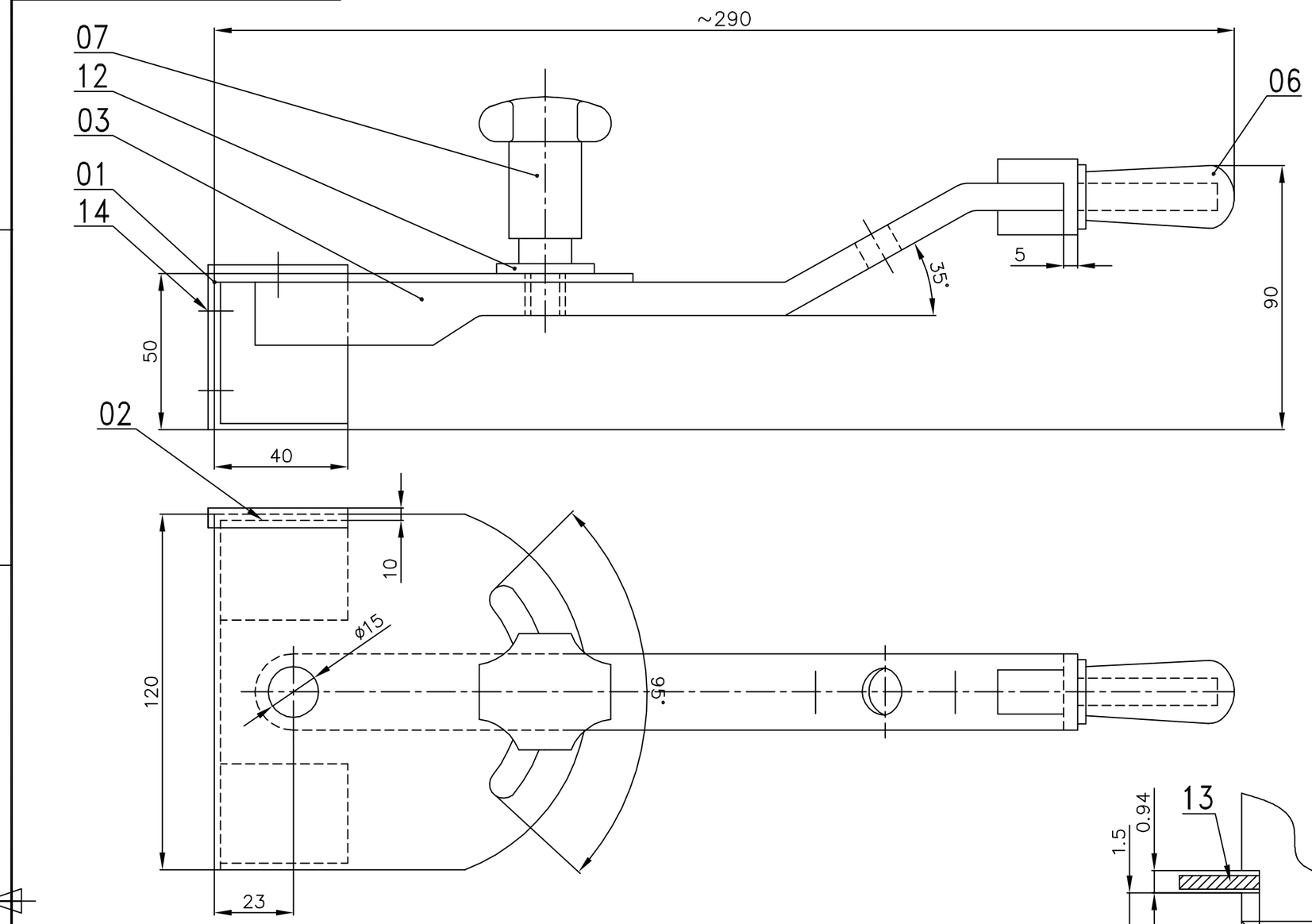


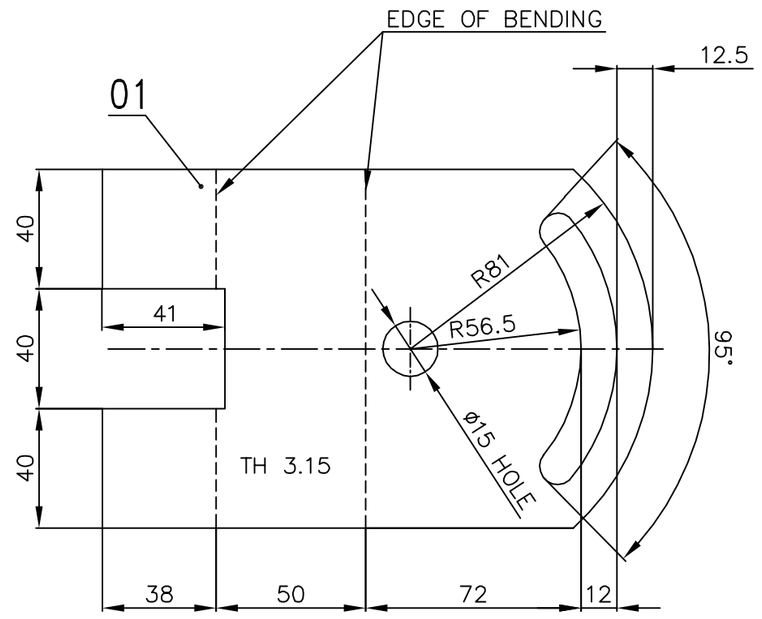


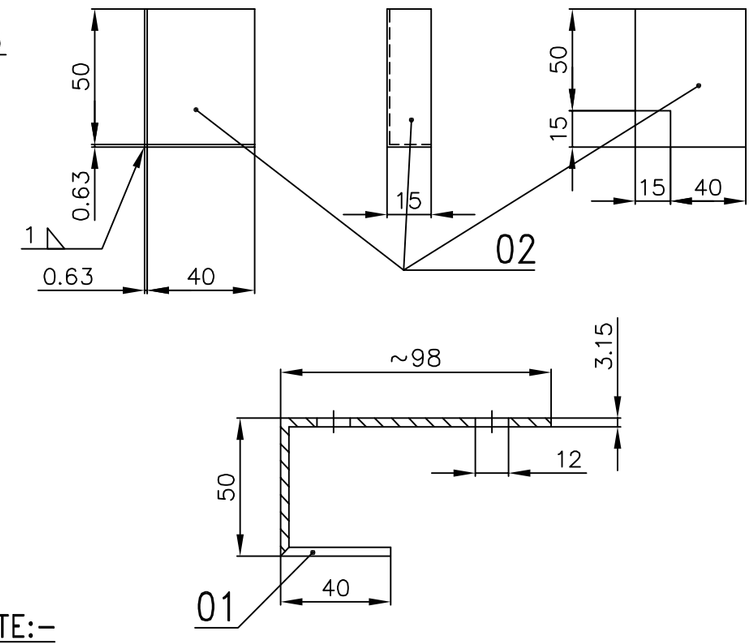


NOTE:-

DRILL HOLE ø15 AFTER SECURING ITEM NOS 08,09,10 AND 11 REMOVE WASHER ITEM NO 11 FOR ASSY TAP THE HOLES FOR ITEM NO 14 IN POSITION.

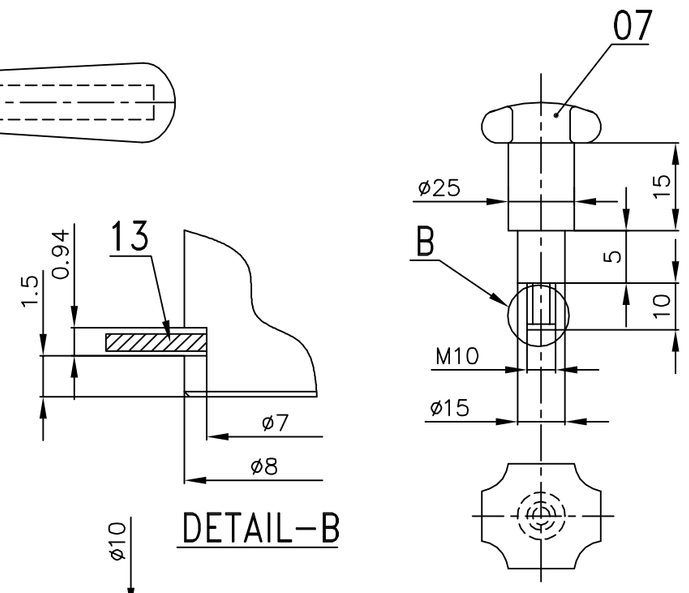


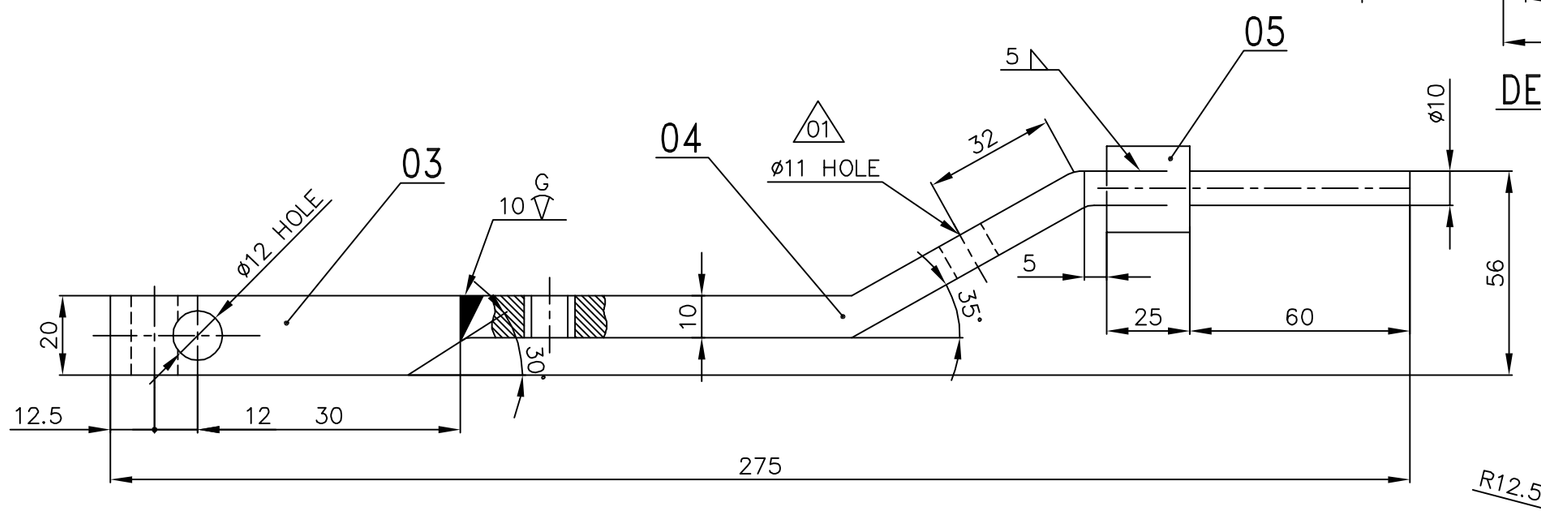


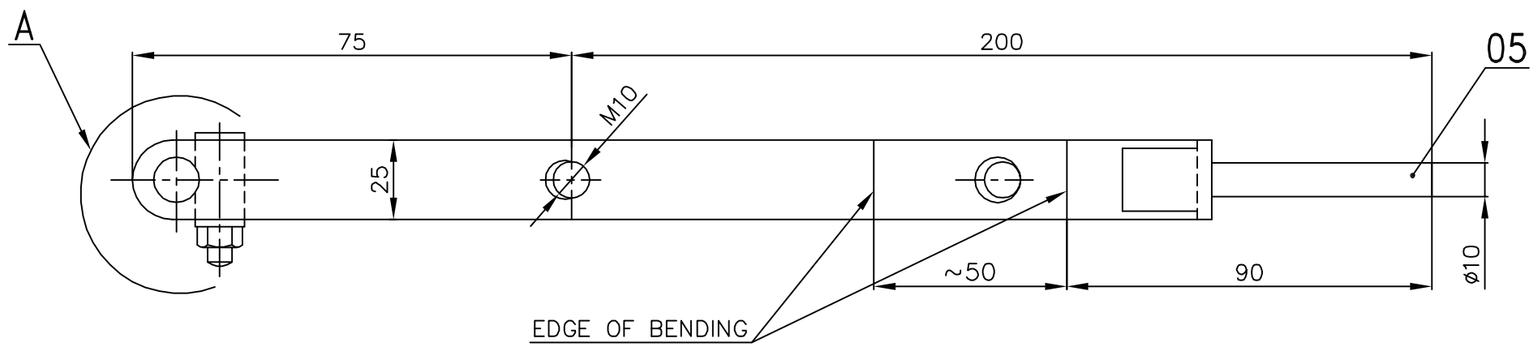


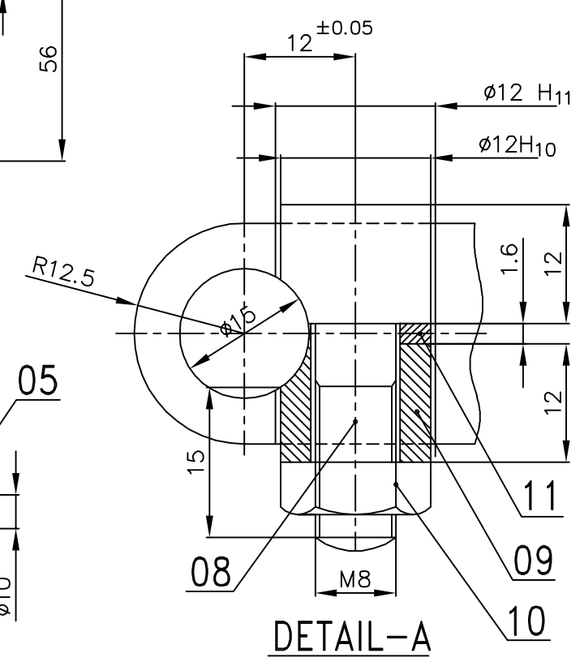


| VAR NO | ITEM NO | DESCRIPTION | CAT | DRAWING No. | ITEM NO / VAR NO | MATL CODE / MATL SPECN | A/P C/P | UNIT / DI | UNIT WT / QTY | GS | ZONE |
|---|---|---|---|---|---|---|---|---|---|---|---|
| | 14 | CHEESE HEAD SCREW M3x5 | | | | 15 1366 | | | 0.001 / 3 | | |
| | 13 | CIRCLIP TYPE C NOMINAL SIZE-7 | | | | 15 3075 | | | 0.001 / 1 | | |
| | 12 | WASHER M10 | | | | IS 2016 | | | 0.004 / 1 | | |
| | 11 | WASHER 1.6xø12/ø8.5 | | | | 15 513 | | | 0.001 / 1 | | |
| | 10 | NUT M8 | | | | 15 3139 | | | 0.005 / 1 | | |
| | 09 | SLEEVE ø12/ø8.5-14 | | | | 15 226 | | | 0.006 / 1 | | |
| | 08 | SCREW M8x23 | | | | | | | 0.020 / 1 | | |
| | 07 | KNOB-PVC COVERED | | | | | | | 0.100 / 1 | | |
| | 06 | RUBBER GRIP SLEEVE | | | | | | | 0.050 / 1 | | |
| | 05 | ROUND ø25-85 | | | | 15 2004 GR III | | | 0.097 / 1 | | |
| | 04 | PL 10x25x150 | | | | 15 226 | | | 0.272 / 1 | | |
| | 03 | PL 20x25x55 | | | | 15 226 | | | 0.216 / 1 | | |
| | 02 | SH 0.63x55x75 | | | | | | | 0.017 / 1 | | |
| | 01 | SH 3.15x120-184.5 | | | | 15 513 | | | 0.446 / 1 | | |

| REV | DATE | ALTERED / CHECKED | ZONE | |
|---|---|---|---|---|
| 03 | 08.02.13 | R.V.R / S.R | | ø16 SHOWN IN ZONE D3 REVISED TO ø11 |
| 02 | 29.06.93 | -sd- / -sd- | | IS NUMBERS YEAR DELETED |
| 01 | 27.05.92 | -sd- / -sd- | | DESIGN CHANGED |

CAUTION: The information on this document is the property of BHARAT HEAVY ELECTRICALS LTD. It must not be used directly or indirectly in any way detrimental to the interest of the company.

TYPE OF PRODUCT
OR NAME OF
CUSTOMER/PROJECT

RETRACED ON DATE.08.02.2013

BHARAT HEAVY ELECTRICALS LTD.,
UNIT: BOILER AUXILIARIES PLANT,
RANIPET - 632 406.

| | NAME | SIGN | DATE | NO.OF VAR. |
|---|---|---|---|---|
| DRN | M.BOOPATHI | -sd- | 14.06.84 | |
| CHD | J.V.RAVIKEERTHI | -sd- | | |
| APPD | S.M.NAIR | -sd- | 28.07.84 | |

| DEPT | GRADE OF UNTOL.DIM | SCALE | WEIGHT (KG). | REF. TO ASSY/OLD DRG. | ITEM NO. | NO. OF ITEMS |
|---|---|---|---|---|---|---|
| AQCS | | N.T.S | 1.238 | | | |
| CODE | PR: QA: 500 | | | | | |

| TITLE | CARD CODE | DRAWING NO. | REV |
|---|---|---|---|
| HAND LEVER | U 01 | 2-79-006-00149 | 03 |

Size A2

ALL DIMENSIONS ARE IN MILLIMETRES

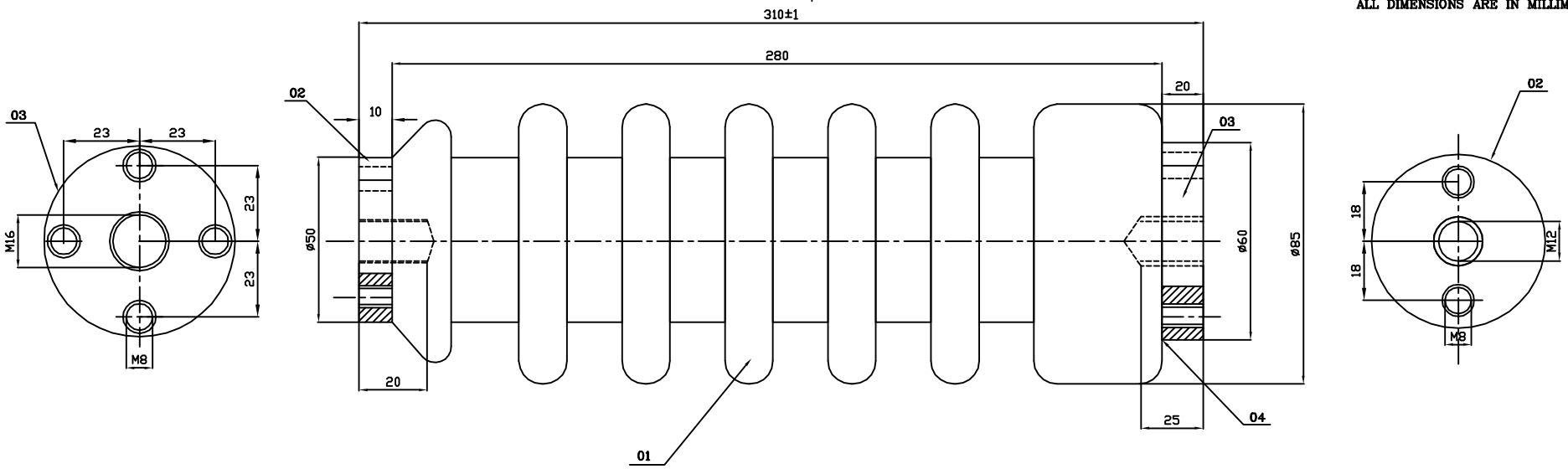


| | | | | | | | | | |
|---|---|---|---|---|---|---|---|---|---|
| 04 | BINDING MATERIAL | | | | | CEMENT MORTOR | | | |
| 03 01 | 03 | PLATE–20, ø 60 | | | | | IS 2062 | | | |
| | | | | | | | IS2062 | | | |
| 03 | 02 | PLATE–10, ø 50 | | | | | IS 2062 03 | | | |
| | 01 | INSULATOR | | | | | 96–150–132 | | | |
| | | | | | | | PORCELAIN | | | |
| VARIANT NO. | DESCRIPTION | IT. NO. | STD | DRAWING NO. | ITEM | MATERIAL CODE | A/C | COMP GROUP | UNIT WTG (KG) |
| | | | | | VAR | MATERIAL SPECN | | | QUANTITY |

SPECIFICATIONS :

ELECTRICAL TESTING :

1. POWER FREQUENCY DRY WITHSTAND TEST 75KV(RMS) FOR 1 MINUTE. 03
2. IMPULSE FLASH OVER TEST 150KV(PEAK) (LIGHTNING IMPULSE 1.2/50 µS.) 01
3. ELECTRICAL TESTS IN ACCORDANCE WITH CLAUSE 3.3 OF IS 5621/1970.

MATERIAL :

4. INSULATION MATERIAL SHOULD BE OF PORCELAIN GLAZED.
   INSULATOR MUST BE TESTED FOR POROSITY.

NOTE :

THE METAL PARTS SHOULD BE PROVIDED WITH SUITABLE INSERTS FOR PROPER BINDING WITH INSULATOR. 01

THE METAL PART SHALL ALSO HAVE SUITABLE M16 AND M12 INSERTS FOR EXTERNAL FIXING OF INSULATOR.

| REV | DATE | ALTERED | REV | DATE | ALTERED | REV | DATE | ALTERED |
|---|---|---|---|---|---|---|---|---|
| 03 | 29.06.93 | CHECKED | 02 | 04.05.91 | CHECKED | 01 | 09.03.83 | CHECKED |
| 1."IS" YEAR REFERENCE DELETED.<br>2.KV VALUE FOR ELECTRICAL TESTS ALTERED.<br>3.IS 226 CHANGED TO IS 2062. | | | SL NO 5. OF SPECIFICATIONS DELETED | | | 1.ITEM NO ADDED.<br>2.ELECTRICAL SPECIFICATIONS CORRECTED.<br>3.NOTE ADDED. | | |

CAUTION: The information on this document is the property of BHARAT HEAVY ELECTRICALS LTD. It must not be used directly or indirectly in any way detrimental to the interest of the company.

TYPE OF PRODUCT OR NAME OF CUSTOMER/PROJECT: REDRAWN

BHARAT HEAVY ELECTRICALS LTD., BOILER PLANT UNIT, TIRUCHIRAPALLI – 620 014

| | NAME | SIGN | DATE | NO.OF VAR. |
|---|---|---|---|---|
| ALTERED | U.JEYANTHI | UJ | 25.07.78 | |
| CHECKED | RPS | | 25.07.78 | |
| APPROVED | S.R | | 25.07.78 | |

| DEPT AQCS | GRADE OF UNTOL.DIM | | SCALE | WEIGHT (KG). | REF. TO ASSY/OLD DRG. | ITEM NO. | NO. OF ITEMS |
|---|---|---|---|---|---|---|---|
| CODE | PR:QA:500 | | NTS | 5 | 0–79–006–00002 | | |

TITLE: PIN INSULATION FOR DISCONNECTING SWITCH

CARD CODE: U 01

DRAWING NO. 3–79–006–00100

REV 03

Size A3

FIRST ANGLE PROJECTION (ALL DIMENSIONS IN MILLIMETRES)

08-249/C

| REV 01 | DATE | ALTERED | REV 02 | DATE | ALTERED |
|---|---|---|---|---|---|
| | | CHECKED | | | CHECKED |

CAUTION THE INFORMATION ON THIS DOCUMENT IS THE PROPERTY OF BHARAT HEAVY ELECTRICALS LTD IT MUST NOT BE USED DIRECTLY OR INDIRECTLY IN ANY WAY DETRIMENTAL TO THE INTEREST OF THE COMPANY

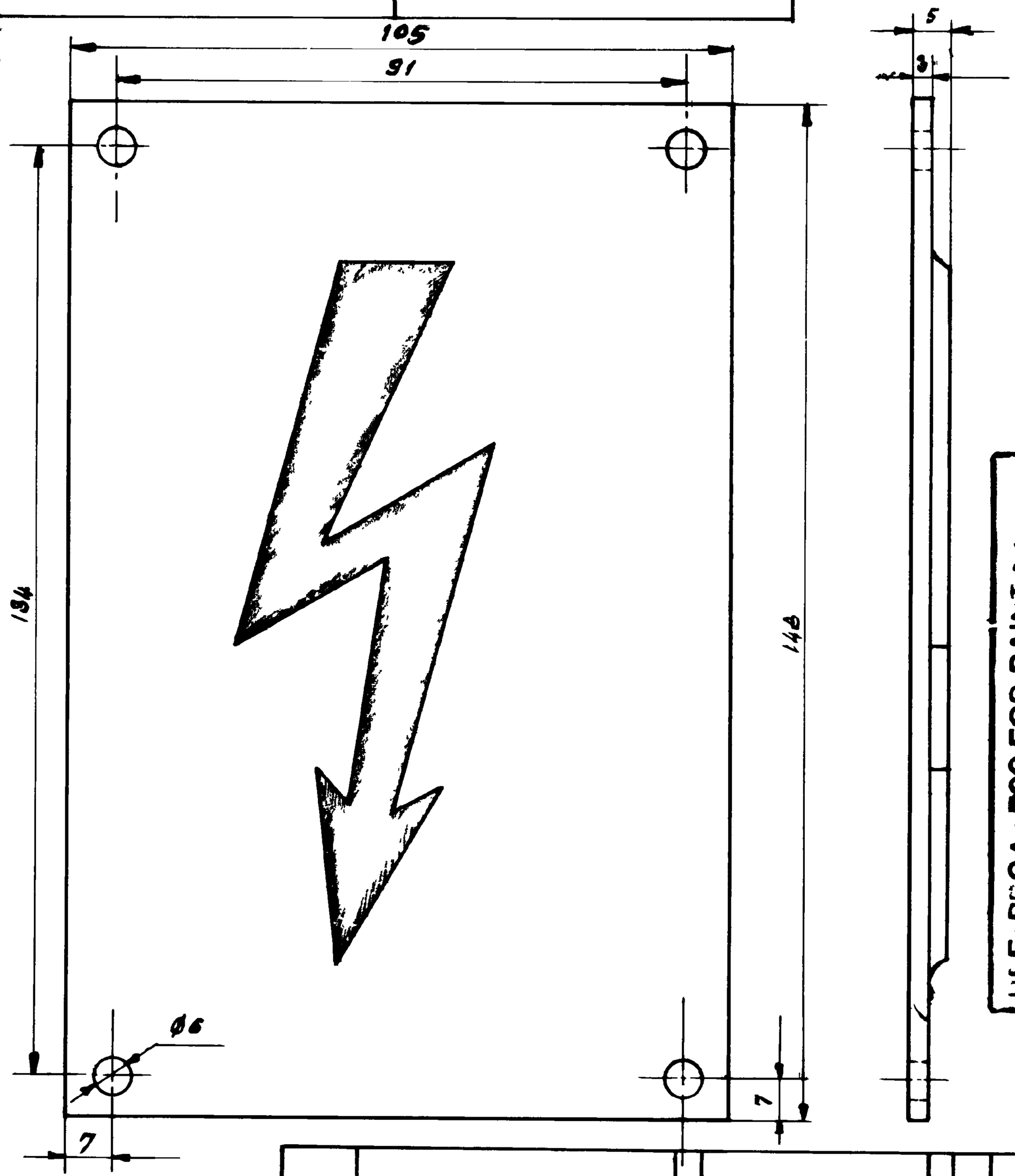


REF: PQA: 590 FOR PAINTING
REF: PQC: 500 FOR UNTOL. DIMNS

NOTE:-
CAST, RED ARROW ON WHITE BACK-GROUND

| VARIANT NO. | DESCRIPTION | STD | MATL CODE | A/C | UNIT | UNIT WT |
|---|---|---|---|---|---|---|
| | ALUMINIUM CASTING | | MATL SPEC | | | QTY |

MICROFILMED ON 0-249 F 225

**Bharat Heavy Electricals Ltd.,**
BOILER PLANT UNIT
TIRUCHIRAPALLI-620 014

| | NAME | SIGN | DATE |
|---|---|---|---|
| DRN | M. NATRAJ | | 27.10.81 |
| CHD | SMN | | 06-11-81 |
| APPD | GS | | 12-11-81 |

| DEPT. | GRADE OF UNTOL DIM | SCALE | WEIGHT (kg) | REF TO ASSY / OLD DRG | ITEM NO. |
|---|---|---|---|---|---|
| ABCS | E/M/F | N.T.S | 0.17 | | |
| CODE 250 | | | | | |

| TITLE | CARD CODE | DRAWING NO | REV |
|---|---|---|---|
| WARNING SIGN | U 01 | 4-79-006-00267 | |

Size A4

| BHEL<br>RANIPET | CHECK LIST FOR DISCONNECTING SWITCH<br>MEANT FOR<br>ESP APPLICATION | |
|---|---|---|
| REF.NO. | REVISION NO. | EFFECTIVE DATE |
| CKL:E:803 | 05 | 15 04 2007 |

**TITLE : CHECK LIST FOR DISCONNECTING SWITCH MEANT FOR ESP APPLICATION**

| | | SIGNATURE |
|---|---|---|
| PREPARED BY | : K C GANDHI PARIMALAM | |
| REVIEWED & APPROVED BY | : S ANIL KUMAR | |

**ISSUED & CONTROLLED BY :: QUALITY ASSURANCE**
**BHEL, RANIPET – 632 406**

**DOCUMENT STATUS**

☐ INFORMATION COPY

☐ CONTROL COPY

*** It is a control of copy only if the mark against the control copy is in other than black color. Otherwise it will be an uncontrolled copy. Check for current revesion.**

| ISSUED TO : | CONTROL COPY NO. |
|---|---|
| | PAGE : Page 01 OF 04 |

**Note:**

1. **This is a standard check list for Disconnecting switch (STANDARD) MEANT FOR ESP APPLICATIONSS. Any additional project specific requirements highlighted in PO or relevant TEP shall be complied with. Any contradiction noticed in this check list with respect to enquiry requirements/TEP shall be highlighted in the offer.**

2. **If the acceptance criteria given in PO or TEP or approved data sheet is stringent then the one specified in this above, the requirement as per PO/TEP/data sheet will supercede the one given in the check list.**

| BHEL RANIPET | CHECK LIST FOR DISCONNECTING SWITCH MEANT FOR ESP APPLICATION | |
|---|---|---|
| **REF.NO.** | **REVISION NO.** | **EFFECTIVE DATE** |
| **CKL:E:803** | **05** | **15 04 2007** |

RECORD OF REVISION

| REV.NO | Effective Date | Remarks |
|---|---|---|
| 00 | 15 08 96 | Original Issue |
| 01 | 10 12 96 | Impulse test level has been changed from 170 KV (P) to 150 KV based on the discussion with Engineering. |
| 02 | 29 05 97 | Clause No. 2 (b) on paint shade revised to refer TEP. |
| 03 | 20 08 97 | Typographical error in III (e) corrected. PO/Enquiry referring CKL:E:803 Rev.02 can also refer CKL:E:803 Rev.03 as there is no change in the content read with record of revision. |
| 04 | 18 06 98 | Revised based on second PCM dt 14 06 1998. |
| 05 | 15 04 2007 | Revised to include more clarity on Lightning Impulse and Dry PF type tests and Included that Dry PF and Impulse values shall be as per BHEL drg (or) BHEL approved sub vendor drgs |

**The following tests/checks are to be done:-**

**I) <u>Routine Test (Sample size: IS 2500/Part I, IL-I, AQL 4%)</u>**

**a) Visual Inspection for make, sl.No. Damage if any on the insulator.**
**b) Dimensional checks as per drawing on randomly selected sample.**

**Following dimensions Should be measured and recorded in dimensional report (DR).**

- **Flange dimensions**
- **PCD**
- **No. of holes**
- **Box overall size**
- **Hole size**

**c) Operational checks – Operate the disconnecting switch 10 times observe the operation of knife edge – satisfactory / not satisfactory.**
**d) Ensure perfect matching of knife with knife contact as per drawing (i.e. stopper plate to be welded in position only after ensuring perfect matching).**
**e) Review of TC for following:-**

- **Insulator as per drawing – Make of insulator: BHEL /WS insulator / Jayashree**
- **Raw material as per TEP**
- **Routine and acceptance test**

**f) IR and HV Test**

**II) <u>Special Requirements: with reference to surface treatment and painting</u> .**

**a) Enclosures are to be pre-treated as per IS 6005 and painted as per Purchase specification (Phosphated to Min class B as per IS 6005).**

**b) Paint shade and thickness as per DrgsTEP/PO conditions shall be ensured.**

**c) Adhesion test for painting: As per IS 101**

**This shall be checked by cross cut tape to ensure that the paint shall not be peeled off at the squares and sides formed by scratches on representative sample.**

III) **Type tests (Review of Type test certificates for test conducted on identical design)**

**The following valid type tests reports as per BHEL/Ranipet approved drgs (not older than five years from BHEL/Ranipet Purchase Order date) shall be submitted by Disconnecting Switch manufacture during final inspection to BHEL/Ranipet or BHEL Ranipet authorized Inspection Agencies. If Disconnecting Switch Manufactures not in a position to submit the valid type tests , then they have to organize for all the type tests without any cost implication to BHEL/Ranipet within reasonable time without affecting the project schedules. Acceptance Levels / values shall be as per BHEL/Ranipet drgs/ Sub vendor BHEL approved drgs .**

a) **Torsion and tensile test for bonding between metal inserts and insulators.**
b) **Mechanical Endurance test**
c) **Degree of protection test (IP 55)**
d) **One Minute Dry Power Frequency Test for one minute.**
e) **Lightning Impulse Test (with 1.2/50Micro second wave) for 15 shots with maximum of 2 flashover allowed) on negative polarity. This is to be done on both open and closed conditions. (Generally as per IS 9921/IS 2071 shall be done)**

**No of shots: : 15 Shots in Negative Polarity generally as per clause no: 3.1.6 of IS 9921 Part-4 .**

**ACCEPTANCE CRITERIA**

**Disconnecting Switch has passed the test successfully if the number of the disruptive discharges shall not exceed two for each test condition.**

**IV. Acceptance Test**

1. **Routine HV Test at 2.5 KV for 1 minute**
2. **IR Test after HV test: IR > 10 Mega Ohm when checked with 500 V meggar.**

**TITLE : TECHNICAL SPECIFICATION FOR BOUGHT OUT ITEM FOR ESP**

**ITEM : DISCONNECTING SWITCH**

**CUSTOMER : BHEL STANDARD**

| | NAME | DESIGNATION | SIGNATURE | DATE |
|---|---|---|---|---|
| PREPARED | R.VENKATARAMAN | SAE | | 25.03.2014 |
| CHECKED | S.RANGARAJAN | SDGM | | 25.03.2014 |
| APPROVED | S.RANGARAJAN | SDGM | | 25.03.2014 |

ISSUED BY

EDC / ECI

**REVISION NO: 02 Clause 3.1.5,5.14.0,5.15.0 added, Clause 5.5.0 revised.Clause 5.12.0 of Rev01 deleted. EFFECTIVE DATE : 25.03.2014**

**REVISION NO :01 Clause no 4.1.1,5.9.0,7.0.0 revised INITIAL RELEASE: 04.02.2013**

**REVISION NO :00 INITIAL RELEASE: 15.04.2005**

## 1.0.0 SCOPE OF SUPPLY:

The scope of supply of DISCONNECTING SWITCH includes the manufacture, Inspection, testing, packing and delivery.

## 2.0.0 APPLICATION:

2.1.0 The DISCONNECTING SWITCH is used in ELECTROSTATIC PRECIPITATOR to disconnect the field from high voltage in OFF condition and to earth the field. The high voltage encountered in the system is of the order of 70 KV /80 KV/95KV, DC (peak) unfiltered voltage.

## 3.0.0 APPLICABLE STANDARDS:

3.1.0 The DISCONNECTING SWITCH shall be manufactured as per the following standards.

3.1.1 IS 13947 (IP-55) - Low voltage Switch gear and Control gear: switches, disconnectors, switch disconnectors and fuse combination units.

3.1.2 IS 2071 - Method of High voltage testing.

3.1.3 IS 2544 - Specification for porcelain post insulators.

3.1.4 IS 5350 - Dimensions of indoor & outdoor porcelain post insulators & post insulator units for systems with Nominal voltages greater than 1000V.

02 3.1.5 IS 6005 - Code of practice for Phosphate coatings of Iron and Steel.

## 4.0.0 SITE CONDITIONS:

4.1.0 The DISCONNECTING SWITCH shall be manufactured considering the following site conditions.

| | | |
|---|---|---|
| 4.1.1 | Ambient temperature | : 5 Deg.C to 50 Deg.C |
| 4.1.2 | Design ambient temperature | : 50 Deg.C |
| 4.1.3 | Relative humidity | : 100% |
| 4.1.4 | Environment condition | : Highly polluted, abrasive & dusty atmosphere |
| 4.1.5 | Location | : Outdoor |

5.0.0 **GENERAL REQUIREMENTS:**

5.1.0 The DISCONNECTING SWITCH (DC Switch) shall be of welded construction. The surfaces and edges shall be smooth. Burr if any shall be removed.

5.2.0 All parts of DC SWITCH shall be of corrosive resistance.

5.3.0 The DC Switch shall be fabricated as per BHEL specification and BHEL approved vendor drawing.

5.4.0 All the current carrying parts shall be made of Tinned copper & connecting ends shall be made of Nickel Chromium plated brass fittings.

02 5.5.0 The enclosure shall be suitable for IP 55-Category 1 Degree of protection.

5.6.0 The DC SWITCH shall be capable of withstanding 170 KV (peak) (negative), 1.2/50 microsecond impulse voltage.

5.7.0 The DC SWITCH shall be capable of withstanding power frequency dry withstand voltage of 75 KV (rms) for 1 minute.

5.8.0 The design of knife contact shall be such that after repeated ON/ OFF operations for 500 times, the knife contact gap shall not show an increased gap of more than 0.4 mm.

5.9.0 The insulator shall be any one of the following makes. BHEL/JAYSHREE/ W.S.INDUSTRIES/UCE.

5.10.0 The bonding of metal parts, shall withstand a torsion load of atleast 15 Kg-m.

5.11.0 The bonding of metal parts, shall withstand a tensile load of 4500 N (459 Kg).

5.12.0 Painting shall be done,after pre-treatment as per IS 6005.The metal surface shall be subject to degreasing,acid cleaning,alkali neutralising followed by primary coat of zinc chromate.Two final coats of epoxy based paint shall be applied.Phospating shall be done as per IS 6005 Class B (min).The thickness of paint shall not be less than 50 microns.Painting colour shall be 631 of IS 5.

5.13.0 The manufacturer shall fix a name plate on the DC Switch enclosure.The name plate shall be made of non corrosive material indicating manufacturer's name,Serial Number,type (variant number) etc.

02 5.14.0 Two (2) Numbers distinct earthing shall be seperatly brought out by the vendor for connection to external main earthgrid of size 50 x 6 GI Flat (BHEL Scope).Suitable Bolt,Nut and washer shall also be provided by the vendor to connect to this earthgrid.Earth symbol shall be provided just above the earth terminal.Earth Symbol shall be black in lines on yellow background.

02

5.15.0 In the case of New Vendor / First time supply, before taking up bulk manufacturing, the approved prototype should have been passed successfully, the type tests indicated under Clause number 5.5 to 5.8 of this specification.The tests should be conducted at CPRI Bangalore in the presence of BHEL representative.Test indicated under 5.8.0 can be conducted in house,if facility is available in house.

## 6.0.0 INSPECTION AND TESTING:

6.1.0 The DC SWITCH shall be inspected and tested as per the following documents.

1. BHEL Purchase order.
2. BHEL approved vendor drawings.
3. BHEL Technical specification (TEP).
4. Inspection checklist referred in the Enquiry/Purchase Order.

## 7.0.0 PACKING:

Individual disconnecting switch shall be packed in polythene sheets and wooden crates to avoid any damage to the DC SWITCH, during transit or outdoor storage. One of the square flanges shall be covered with MS dummy plate of minimum 3mm thick with neoprene gasket.All other open flanges shall be covered with wooden/card board dummy covers of minimum 6mm thick with suitable packing material.The packing shall be suitable for storage at outside for a period of one year.

## 8.0.0 DOCUMENTATION :

The supplier shall submit six sets of all detailed drawings & in soft copy prepared in Autocad for approval within 15 days from the date of purchase order. After final approval the supplier shall also submit the approved drawings in CD apart from 6 hard copies.

**********