BHARAT HEAVY ELECTRICALS LIMITED
HEEP HARIDWAR INDIA-PIN 249403
FAX NO: 0091 1334 226462
PHONE NO: 0091 1334 281084

Enq. No. : T/T212/2017/1381M2

M/s…….

Sub: BHEL-HEEP/OPEN-TENDER (Turbine) / 2019

Dear Sir,

The Heavy Electricals Equipment Plant (HEEP) located in Haridwar, India is one of the major manufacturing plants of Bharat Heavy Electricals Ltd. The core business of HEEP includes design and manufacture of large steam and gas turbines, turbo generators and so on.

Sealed tenders with the **Tender No.** and **opening date** clearly super scribed on the cover are invited from the manufacturers (registered as well as unregistered) for the supply of the following items :-

SL. NO.	MATERIAL CODE	DESCRIPTION	DRAWING NO.	QTY(No)	DELIVERY SCHEDULE
1	W90311652018	F/M OIL GUARD RING	01165256000, Rev-01	5	5-30.09.19
2	W90311721010	F/M OIL GUARD RING	01172156000, Rev-01	5	5-30.09.19
3	W90311724019	F/M OIL GUARD RING	01172456000, Rev-01	5	5-30.09.19
4	W90311820018	F/M OIL GUARD RING	01182056000, Rev-01	5	5-30.09.19
5	W90311821022	F/M OIL GUARD RING	01182139000, Rev-00	10	10-30.09.19
6	W90311826024	F/M OIL GUARD RING	01182658000, Rev-00	10	10-30.09.19
7	W90311827020	F/M OIL GUARD RING	01182739000, Rev-00	5	5-30.09.19
8	W91311654011	CASTING FOR SPHERICAL SOCKET	21165456901, Rev-00	5	5-30.09.19
9	W91311723013	CASTING FOR SPHERICAL SOCKET	21172356901, Rev-00	5	5-30.09.19
10	W9131183101	CASTING FOR SPHERICAL SOCKET	21183156901, Rev-00	10	10-30.09.19
11	W91311832017	CASTING FOR CYLINDERICAL SHELL	21183258901, Rev-00	5	5-30.09.19

SPECIAL INSTRUCTIONS:

1. VENDOR TO OFFER AS PER DRAWINGS AND SPECIFICATION (ANNEXURE-3) HERE ENCLOSED.
2. INSPECTION BY THIRD PARTY INSPECTION AGENCY (LRS/TUV/BV) FOR FOREIGN VENDORS AND BHEL NOMINATED INSPECTION AGENCY 'TUV' FOR INDIAN VENDORS AS PER QP NO. " QA/CF/QP/311, REV 02" FOR ITEMS W91311654011, W91311723013, W91311831010 & W91311832017 AND

FOR ITEMS W90311652018, W90311721010, W90311724019, W90311820018, W90311821022, W90311826024 & W90311827020 AS PER QP NO. "QA/CF/QP/312, REV 02".

3. FOREIGN VENDORS TO EITHER QUOTE THIRD PARTY INSPECTION CHARGES (LRS/BV/TUV) SEPARATELY IN THEIR OFFER OR VENDOR TO MENTION THAT THIRD PARTY INSPECTION CHARGES ARE INCLUDED IN THE QUOTED PRICES OF THE OFFER. IF VENDOR DO NOT QUOTE THIRD PARTY INSPECTION CHARGES OR NOT MENTION THAT THIRD PARTY INSPECTION CHARGES ARE INCLUDED IN QUOTED PRICES, THEN IT SHALL BE PRESUMED THAT THIRD PARTY INSPECTION CHARGES ARE INCLUDED IN THE QUOTED PRICES OF THE OFFER. NO FURTHER CLARIFICATION SHALL BE ASKED IN THIS REGARD AFTER OPENING OF TECHNO-COMMERCIAL BID PART-1.

4. BHEL STANDARD PAYMENT TERM i.e "PAYMENT AFTER RECEIPT AND ACCEPTANCE OF MATERIAL/ITEM AT HEEP, BHEL-STORE" AS **PER GENERAL INSTRUCTION AND STANDARD TERMS & CONDITION (GISTC), VERSION APRIL 2019, Rev:04** SHALL BE APPLICABLE.

5. THE QUOTATION SHALL BE VALID FOR **A MINIMUM PERIOD OF 120 DAYS**, EFFECTIVE FROM THE DATE OF TENDER OPENING.

6. VENDOR TO CONFIRM THAT THEIR QUOTED RATES ARE NOT MORE THAN THOSE QUOTED FOR ANY OTHER CUSTOMER INCUDING OTHER BHEL UNITS.

7. PENALTY FOR LATE DELIVERIES SHALL BE APPLICABLE @0.5% PER WEEK OR PART THEREOF ON THE VALUE OF RESPECTIVE DELAYED SUPPLIES SUBJECT TO A MAXIMUM OF 10% OF THE VALUE OF RESPECTIVE DELAYED SUPPLIES. THE REMAINING TERMS SHALL BE AS PER **GENERAL INSTRUCTION AND STANDARD TERMS & CONDITION (GISTC), VERSION APRIL 2019, Rev:04**

8. EARLY DELIVERY IS ALSO ACCEPTABLE. VENDOR TO OFFER BEST DELIVERY SCHEDULE.`

9. THE TOTAL QUANTITY MAY UNDERGO CHANGE AT THE TIME OF ORDERING.

10. FOR THIS PROCUREMENT, PUBLIC PROCUREMENT (PREFERENCE TO MAKE IN INDIA), ORDER 2017 DATED 15.06.2017 & 28.05.2018 AND SUBSEQUENT ORDERS ISSUED BY RESPECTIVE NODAL MINISTRY SHALL BE APPLICABLE EVEN IF ISSUED AFTER ISSUE OF THIS TENDER ENQUIRY BUT BEFORE FINALIZATION OF CONTRACT/ PO/WO AGAINST THIS TENDER ENQUIRY.

11. IN THE EVENT OF ANY NODAL MONITORY PRESCRIBING HIGHER OR LOWER PERCENTAGE OF PURCHASE PREFERENCE AND/ OR LOCAL CONTENT IN RESPECT OF THIS PROCUREMENT, SAME SHALL BE APPLICABLE.

12. DEFAULT PURCHASE PREFERENCE UNDER MAKE IN INDIA ORDER SHALL BE 20% TO SUPPLIERS WITH DEFAULT MINIMUM LOCAL CONTENT OF 50% FOR ALL ITEMS / WORKS / SERVICES. FOR FURTHER DETAILS, PLEASE REFER LATEST VERSION OF GISTC. PROCUREMENTS WHERE THE ESTIMATED VALUE TO BE PROCURED IS LESS THAN RS. 5 LAKHS SHALL BE EXEMPTED FROM PUBLIC PROCUREMENT (PREFERENCE TO MAKE IN INDIA), ORDER 2017 DATED 15.06.2017 & 28.05.2018.

The tender documents can be downloaded from our web site **www.bhel.com or www.bhelhwr.co.in or www.tenders.gov.in.** After downloading the tender documents from web site, while submitting the tender as detailed in "Instruction to Bidders", intending vendors must submit **Tender Fee of Rs. 2,000/- (Rupees two thousand only)** in the form of Pay Order / Demand Draft (drawn in favor of 'BHEL HARIDWAR') only. It may be noted that if hard copy of any tender document is required, then
the same may be collected against copy of Pay Order / Demand Draft of requisite tender fee (while original to be submitted with Part-I). **However, if no hard copy of any tender document is required from BHEL, no tender fee is required to be submitted.**

Vendors must also remit the requisite **EMD (Earnest Money Deposit) of Rs. 1, 50,000/- (Rupees one lakhs fifty thousand only)** in the form (as permissible under Income Tax Act) / Pay Order / Demand draft (drawn in favour of 'BHEL HARIDWAR'). Cash is to be deposited in cash section in BHEL Haridwar and receipt of the same is to be enclosed with

offer. In case of foreign bidders e-payment may also be accepted as EMD. For E-Payment, the RTGS details are as mentioned below:

Bank Details	SWIFT Details of bank	Contact Details of Banker
STATE BANK OF INDIA RANIPUR BRANCH, OPP: BHEL MAIN GATE, SECTOR-5, RANIPUR, HARIDWAR, UTTRAKHAND, INDIA PIN CODE : 249403	SWIFT NO :SBININBB225 CC ACCOUNT NO :10667995458 IFSC CODE : SBIN0000586	Name: Sh. Sudhir Sharma Design: Chief Manager (IBD) Contact No. +91 1334 224201 Phone: +91 1334 226125 Fax: +91 1334 226512

For all item material codes, HEEP BHEL Hardwar PMD ST040 approved vendors i.e M22745 , M06024, M41137, M28127 & M17004 are exempted from EMD submission.

For material codes W91311654011, W91311723013, W91311831010, W91311832017, HEEP BHEL Hardwar PMD: ST040 approved vendors i.e M04175, M22744, M04152 & M23121 are exempted from EMD submission.

Please submit separate drafts for EMD and tender fee in an envelope super-scribed with bold letters "EMD & Tender Fee" to be submitted with Part-I.

Micro & Small Enterprises (MSEs) are exempted from submission of EMD and/or Tender fees. Documents as detailed in **GENERAL INSTRUCTION AND STANDARD TERMS & CONDITION (GISTC), VERSION APRIL 2019, Rev:04** hoisted on our website www.bhelhwr.co.in are to be submitted for availing exemption from submission of Tender Fees & EMDs.

BHEL will forfeit the EMD if, the successful bidder / vendor refuses to honor the order after award of the same on him and / or withdraws his bid and / or unilaterally changes the offer and / or any of its terms & conditions within the validity period.

Tenders will be received in Tender Box kept in Tender Room and should be addressed to:

THE HEAD OF MATERIAL MANAGEMENT,
Heavy Electrical Equipment Plant,
Bharat Heavy Electricals Limited,
HARIDWAR-249403 (Uttarakhand), INDIA.

The date for opening of tender shall be 22.05.2018. Tenders will be received up to 1.45 P.M. on **22.05.2018** and opened on the same day at 2.00 P.M. in the Tender Room**. Please note that tender received after due date & time (1.45PM on 22.05.2018) will not be REPEAT** wi**ll not be opened.** BHEL will not be responsible for any type of postal / courier delay.

Bids shall be opened at 2 PM on the due date in the presence of authorized representative of the bidders who may like to be present. The authorized representative should bring authority letter from their parent company (Manufacturer) for the specific tender no. attending the bid opening.

Amendments/Corrigendum, if any, will be hosted only on the websites mentioned above. Other terms and conditions will be as per tender documents.

Documents submitted with the offer/bid by the bidder (original supplier) shall be signed and stamped in each page by authorized representative of the bidder.

Vendors operating from BHEL quarters, unauthorized colonies on BHEL land and Dharamshalas/ hotels shall not be considered, hence such vendors need not apply. Any vendor who is under hold (for the item)/ delisted/ banned with BHEL on date of opening of Part – 1 will not be allowed to quote for this tender. In case their offer is received, it may be out rightly rejected.

Unregistered vendors may please visit our site www.bhel.com for filing up the Supplier Registration Form. Copy of filled Supplier Registration Form (SRF) may be submitted along with the offer.

KINDLY READ "INSTRUCTIONS TO BIDDERS." QUOTATION NOT IN ACCORDANCE WITH THE INSTRUCTIONS ARE LIABLE TO BE DISQUALIFIED AND IGNORED.

INSTRUCTIONS TO BIDDERS FOR OPEN TENDER

Definition

Registered Vendors - Are those who are registered with BHEL, Haridwar for Megawatt rating/ Size/ Weight of tendered items in respective material grade or machining of such items.
Un-registered Vendors - Are those who are not registered with BHEL, Haridwar for Megawatt rating/ Size/ Weight of tendered items in respective material grade or machining of such items.

ESSENTIAL INSTRUCTIONS

* Un-registered vendors may be approved by BHEL, if found suitable, on the basis of data furnished by them in Supplier Registration Form (SRF) for Foreign Vendors or Indigenous Vendors (as applicable).

* BHEL team may visit the vendor (s) works for verification of capability and capacity claimed in tender Documents/offer (s).

* The tenders shall be submitted in **two parts** in separate sub-envelopes clearly super scribing type of bid, tender no., due date and the name of vendor with full contact details.

 Part I –

- Tender fee (if hard copy insisted from BHEL) & EMD
- Documents as detailed in GISTC by MSE Supplier for availing benefits intended for MSE suppliers.
- Duly filled Non Disclosure Agreement (Annexure 4)
- Point wise reply/confirmation to **Pre-qualifying requirement (PQR)** as per Annexure-2 along with all necessary supporting documents in one go**. Non-compliance of this may lead to rejection offer.**
- Techno- Commercial Bid - it should be replica of price bid (copy of price bid without price part) in line with technical requirement as per drawings and specification (Annexure-3).

 Part-II -

- Price Bid

All the sub-envelopes (Part-I & Part-II) to be put in a single covering envelope indicating tender no., due date and the name of vendor, e-mail id, with full contact details. Offer should be complete in all respect (i.e. Part-I, Part-II). BHEL may decide to ignore the offer in case of submission of incomplete offer.

* Please submit your offer according to **GENERAL INSTRUCTION AND STANDARD TERMS & CONDITION (GISTC), VERSION APRIL 2019, Rev:04** for Tender Enquiries. Please visit our site **www.bhelhwr.co.in for GISTC**. All the bidders/vendors must ensure compliance of these **GENERAL INSTRUCTION AND STANDARD TERMS & CONDITION (GISTC), VERSION APRIL 2019, Rev:04.** It can also be referred by login to B2B Portal for Vendors.

REFERENCES:

Annexure-1- Item Details

Annexure-2 (Pre-Qualification Requirement)

Annexure-3 (Applicable Drawings and Specifications)

Annexure-4 (NDA)

Annexure-5 (Quality Plan)

Annexure-6 (Format for CA Certificate - Applicable for MSE vendors)

Annexure-7 (Order 2017 dated 15.06.2017 & 28.05.2018 (Preference to make in India)

Annexure GISTC (General Instructions and Standard Terms & Conditions)

M/S. OPEN TENDER
BHEL
HARIDWAR249403
INDIA
-

ANNEXURE-1

DUEDATE **22-05-2019**

Vendor Code **00001**

SL	MATERIAL CODE ITEM DESCRIPTION	QUANTITY	UNIT	LOTNO	LOT QTY	DELIVERY SCHEDULE
1	W90311652018 DRG: 01165256000 REV: 01 FINISH MACHINED OIL GUARD RING AS PER DRG 01165256000 BUT WITHOUT ITEM NO. 2 & 3. MATERIAL SPEC. HW19793. APPLY TEMPORARY RUST PREVENTIVE. PAINT IS NOT ALLOWED. DESPATCH IN SEA WORTHY PACKING . SPEC: HW19793 REV: 03	5	NO	1	5	30/09/19
2	W90311721010 DRG: 01172156000 REV: 01 FINISH MACHINED OIL GAURD RING AS PER DRG 01172156000 BUT WI THOUT ITEM NO. 2 & 3. MATERIAL SPECIFICATION HW19373. APPLY TEMPORARY RUST PREVENTIV E. PAINT IS NOT ALLOWED. DESPATCH IN SEA WORTHY PACKING. SPEC: HW19793 REV: 03	5	NO	1	5	30/09/19
3	W90311724019 DRG: 01172456000 REV: 01 FINISH MACHINED OIL GAURD RING AS PER DRG 01172456000 BUT WI THOUT ITEM NO. 2 & 3. MATERIAL SPEC HW19793. APPLY TEMPORARY RUST PREVENTIVE. PAINT IS NOT ALLOWED. DESPATCH IN SEA WORT HY PACKING. SPEC: HW19793 REV: 03	5	NO	1	5	30/09/19
4	W90311820018	5	NO	1	5	30/09/19

MATERIAL CODE / ITEM DESCRIPTION	QUANTITY	UNIT	LOTNO	
DRG: 01182056000 REV: 01 FINISH MACHINED OIL GUARD RING AS PER DRG 01182056000 BUT WI THOUT ITEM NO. 2 & 3. MATERIAL SPECIFICATION HW19793. APPLY TEMPORARY RUST PREVENTIV E. PAINT IS NOT ALLOWED. DESPA TCH IN SEA WORTHY PACKING. SPEC: HW19793 REV: 03				
5 W90311821022 DRG: 01182139000 REV: 00 FINISH MACHINED OIL GUARD RING AS PER DRG 01182139000 BUT WITHOUT ITEM NO. 2 & 3. MATERIAL SPECIFICATION HW19793 APPLY TEMPORARY RUST PREVENTIVE. PAINT IS NOT ALLOWED .DESPATCH IN SEA WORTHY PACKING SPEC: HW19793 REV: 03	10	NO	1	10 30/09/19
6 W90311826024 DRG: 01182658000 REV: 00 FINISH MACHINED OIL GUARD RING AS PER DRG. NO. 01182658000 BUT WITHOUT ITEM NO. 2 & 3. MATERIAL SPECIFICATION HW19793 APPLY TEMPORARY RUST PREVENTIVE.PAINT IS NOT ALLOWED.DESPATCH IN SEA WORTHY PACKAGE. SPEC: HW19793 REV: 03	10	NO	1	10 30/09/19
7 W90311827020 DRG: 01182739000 REV: 00 FINISH MACHINED OIL GUARD RING AS PER DRG 01182739000 BUT WITHOUT ITEM NO. 2 & 3 MATERIAL SPECIFICATION HW19793 APPLY TEMPORARY RUST PREVENTIVE. PAINT IS NOT ALLOWED. DESPATCH IN SEA WORTHY PACKING. SPEC: HW19793 REV: 03	5	NO	1	5 30/09/19

	MATERIAL CODE ITEM DESCRIPTION	QUANTITY	UNIT	LOTNO	
8	W91311654011 DRG: 21165456901 REV: 00 CASTING FOR SPHERICAL SOCKET (ROUGH MACHINED) SPEC: HW19793 REV: 03	5	NO	1	5 30/09/19
9	W91311723013 DRG: 21172356901 REV: 00 CASTING FOR SPHERICAL SOCKET (ROUGH MACHINED) SPEC: HW19793 REV: 03	5	NO	1	5 30/09/19
10	W91311831010 DRG: 21183156901 REV: 00 CASTING FOR SPHERICAL SOCKET (ROUGH MACHINED) SPEC: HW19793 REV: 03	10	NO	1	10 30/09/19
11	W91311832017 DRG: 21183258901 REV: 00 CASTING FOR CYLINDRICAL SHELL (ROUGH MACHINED) SPEC: HW19793 REV: 03	5	NO	1	5 30/09/19

** IMPORTANT: This enquiry is 2 part tender. Techno-Commercial bid (Part-1) & Price Bids (Part-2) should be submitted in separate envelopes. These two envelopes should be submitted in a common sealed envelope. Techno-Commercial Bid shall contain detailed Technical Specification, Drawings Technical documents, Catalogues, taxes & duties, payment terms, delivery period, Validity of offer, Replica of Price Bid (Copy of price bid without price part) etc. The confirmation to the special terms & conditions must be submitted alongwith Techno-Commercial bid.

General Instructions:
Please visit our site www.bhelhwr.co.in for latest version of General Instructions and Standard Terms & Conditions (GISTC) for Tender Enquiries. All the bidders/vendors must ensure compliance of latest GISTC. Terms & Conditions printed overleaf of this Standard Tender enquiry format are null & void.
For this procurement, Public Procurement (Preference to Make in India), Order 2017 dated 15.06.2017 & 28.05.2018 and subsequent Orders issued by the respective Nodal Ministry shall be applicable even if issued after issue of this NIT but before finalization of contract / PO / WP against this NIT.
In the event of any Nodal Ministry prescribing higher or lower

MATERIAL CODE ITEM DESCRIPTION	QUANTITY	UNIT	LOTNO

percentage of purchase preference and/ or local content in respect
of this procurement, same shall be applicable.
Default purchase preference under Make in India order shall be 20% to suppliers
with default minimum local content of 50% for all items / works / services.
For further details, please refer latest version of GISTC.
Procurements where the Estimated value to be procured is less than Rs. 5 lakhs
shall be exempted from Public Procurement (Preference to Make in India),
Order 2017 dated 15.06.2017 & 28.05.2018

RAJ KUMAR

SR. ENGINEER (PPX-T)

(13)

बीएचईएल BHEL Maharatna Company Celebrating 50 Years of Engineering Excellence (1964-2014) Golden Jubilee 50 Years	**BHARAT HEAVY ELECTRICALS LIMITED, HEEP HARIDWAR**	**ITEM: Finish machined Oil Guard Ring DEPT: STE & MTE**

PRE –QUALIFICATION REQUIREMENT

Indent No 20171381(Item Sl. No. 1 to 7)

The following pre-qualification criteria for supplying Finish machined Oil Guard:

1. **Manufacturing & Testing Facility Requirement:**
   a) The vendor should have suitable in-house manufacturing facilities for handling, melting, casting and heat treatment to manufacture enquiry items. Details of above facilities are to be submitted with offer.
   b) Vendor to furnish in house testing facility to test the casting as per enquiry drawing and specification. Details of testing facility - Destructive and Non-Destructive is also to be submitted. In case of outsourcing details should also be provided.
   Note: Testing lab should be NABL accredited.
   c) Also vendor to furnish details of facilities for machining available in-house. In case of out-sourcing of machining operation, details of their sub-vendor with machining facilities to be provided. These facilities should be suitable to manufacture enquiry items.

2. **Minimum Experience Requirement:**
   Vendor must have experience of manufacturing casting in material grade EN-GJS-400-15U (GGG-40). Vendor to submit details of their experience of past supply in above material grade casting in last three years as per Table 1.

Table 1

S.No	Item	Grade	Weight	Year of Supply	Customer
1. 2. 3.					

3. Vendor to confirm that they will manufacture and supply enquiry items meeting all requirements specified in respective BHEL drawings / specification HW19793.

4. Vendor must furnish copy of PO and its corresponding TC's of atleast 3 castings from List submitted at Table 1.
   The TC's must be thrid party witnessed and approved by customer.

Note: Above details Sl. No. 1 to 4 to be submitted in consolidated manner and in one go.

Pre-Qualification requirements for Spherical Socket and Cylindrical Shell
Indent No. 20171381 (Item Sl. No. 8 to 11)

Clauses 1-4 are mandatory requirements. Offers of vendors not meeting these requirements will not be considered.

1. Vendor should have experience of supplying castings in **nodular cast Iron** material grade. In support of this, vendor shall furnish following details of the supplies in last 3 years-
   a. Experience list, as per the following format:

Sl. No.	Weight (kg)	Material Grade	Qty.	PO No.	Name & Address of customer	Date of supply

   b. Vendor must furnish copy of PO and its corresponding test certificates (including Mechanical testing and Non Destructive test reports), of at least three casting from the above list.
   The test certificates must be certified by third party inspection agency or accepted by customer.

2. a. The vendor must confirm that they have suitable in-house manufacturing facilities for handling, melting and casting of enquired castings. Details to be provided.

   b. Also vendor to furnish details of facilities for rough machining and heat treatment available in-house. In case of out-sourcing, details of sub-contractor and its facilities to be provided. These facilities should be suitable for manufacture of spherical socket and cylindrical shell of enquired grade and weight.

3. a. Vendor to provide details of in-house facilities for performing destructive and non-destructive testing of these castings.

   b. In case of non-availability of facilities under point 3(a), outsourcing of these tests from NABL accredited labs is also acceptable.

4. Vendor must provide clause wise confirmation of specification HW19793 and drawing.

Note: 1. Vendor shall also provide the photographs/drawings of the castings specified by them in the experience list at clause 1a.
2. All the documents shall be submitted in consolidated manner and should be in English language.

Ashish Ranjan
Sr Mgr/MTE

18/5/17
Sujeet Kumar
Dy Mgr/MTE

FIRST ANGLE PROJECTION | (ALL DIMENSIONS ARE IN mm) | FORM DG 46 (B)

DRAWING No. 0-11652-56000

Annex-3

ALL OVER OTHERWISE STATED

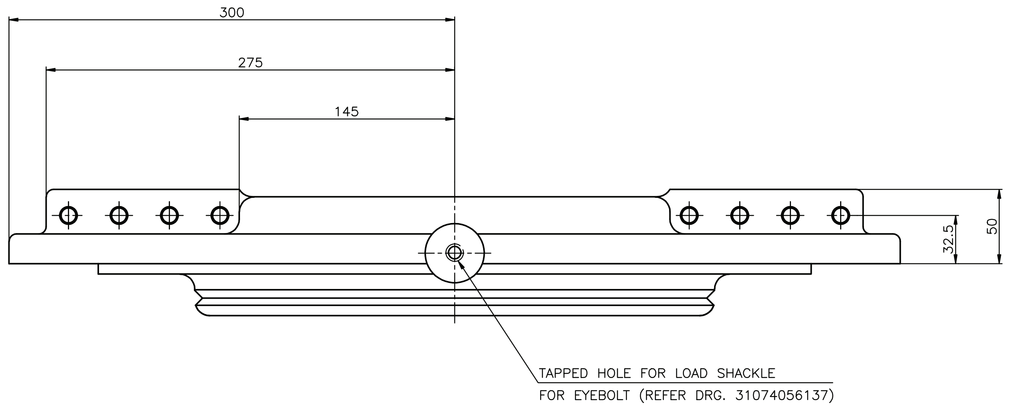

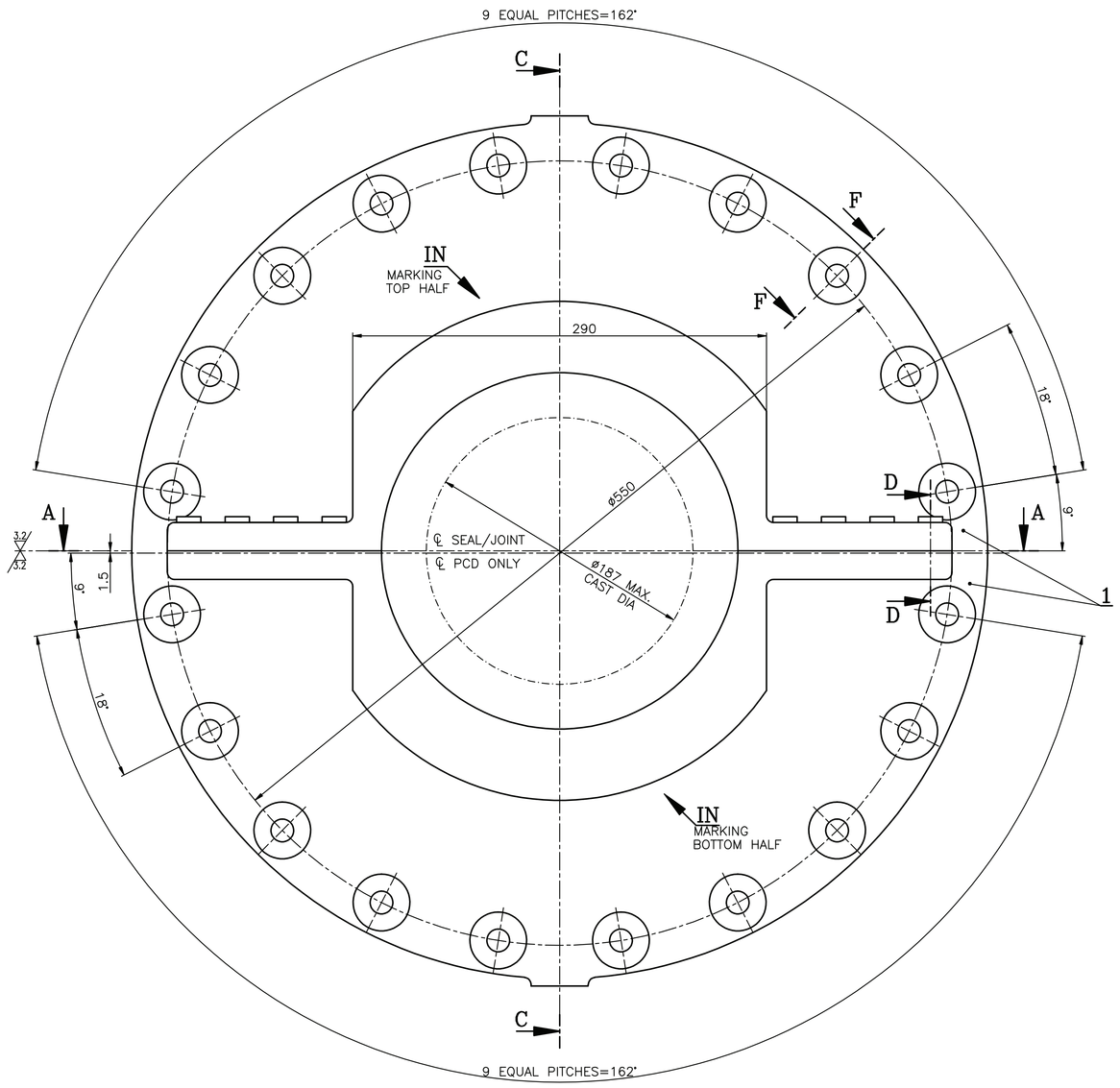

SEALING RING IN TWO PARTS

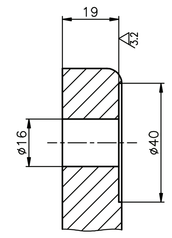

SECTION F–F
SCALE 1:1

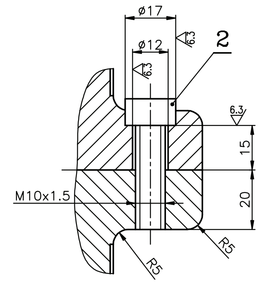

SECTION D–D
SCALE 1:1

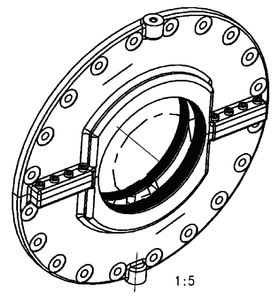

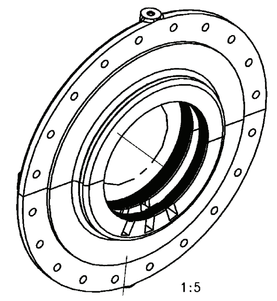

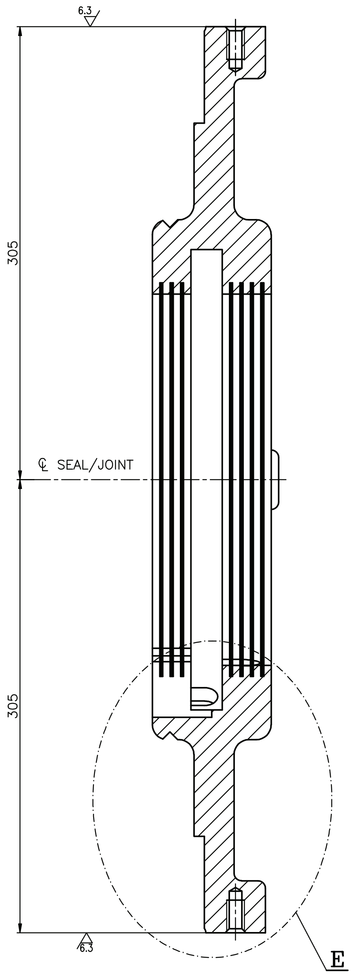

SECTION C–C

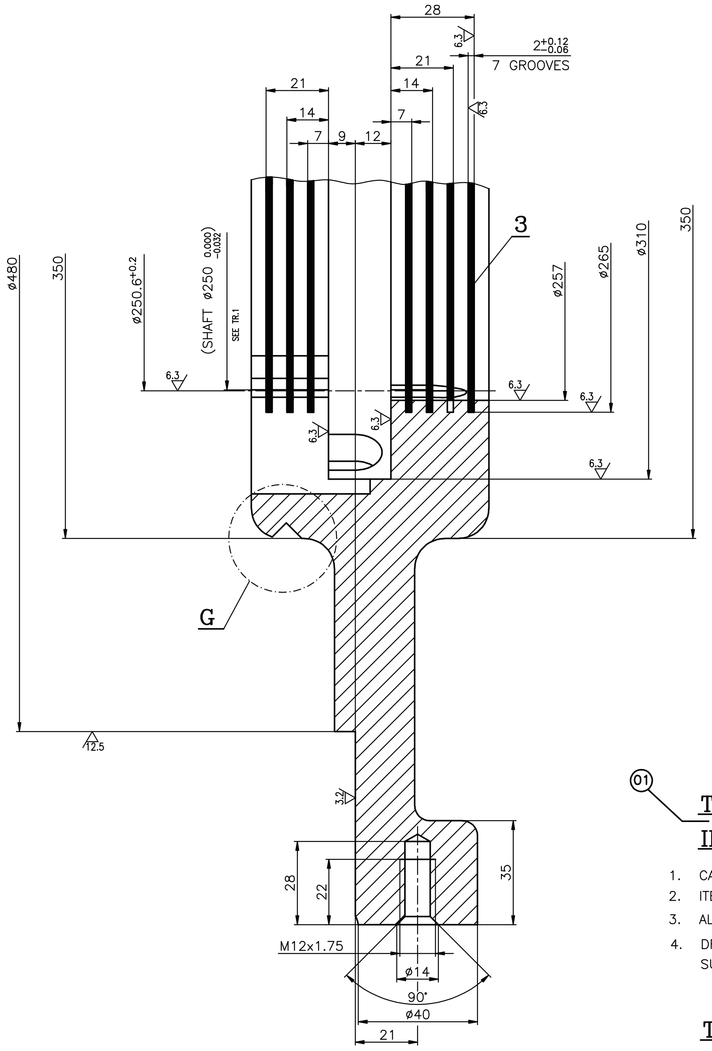

DETAIL–E
SCALE 1:1

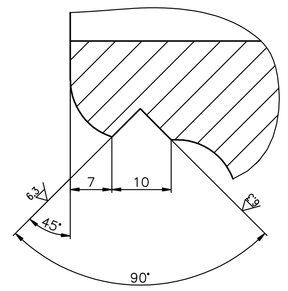

DETAIL–G
SCALE 2:1

T.R. FOR PROCURREMENT OF OIL GUARD RING IN FINISH MACHINE CONDITION:–

1. CASTING SHALL MEET ALL THE REQUIREMENTS OF SPECIFICATION HW19793.
2. ITEMS NO. 2 & 3 ARE IN BHEL'S SCOPE OF SUPPLY.
3. ALL FILLET RADII ARE R5 UNLESS OTHERWISE STATED.
4. DRG. NO. AND SUPPLIER'S EMBLEM SHALL BE MARKED ON THE SURFACE AT IN

TECHNICAL REQUIREMENTS:–

1. THE SEAL RING MUST BE INSTALLED SO THAT IN THE STAND STILL CONDITION THE SEAL STRIP (ITEM NO. 03) HAVE A CLEARANCE OF $0.2^{+0.1}$ TO THE BOTTOM OF THE SHAFT.
2. CONSERVATON OF OIL GUARD RING (OGR) TO BE CARRIED OUT AS PER ST33004.
3. DIMENSIONS SHOWN ARE FINISH MACHINED SIZES.

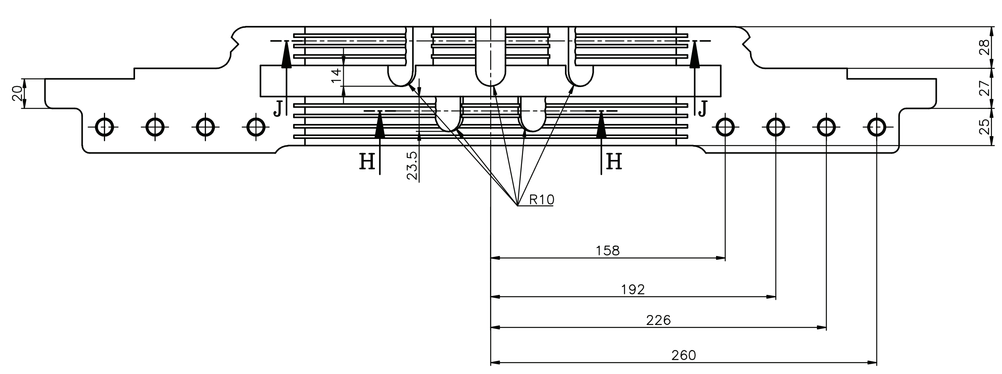

SECTION A–A

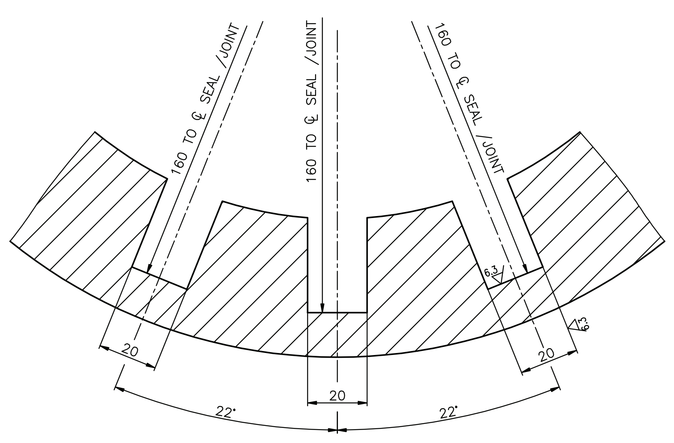

SECTION J–J
SCALE 1:1

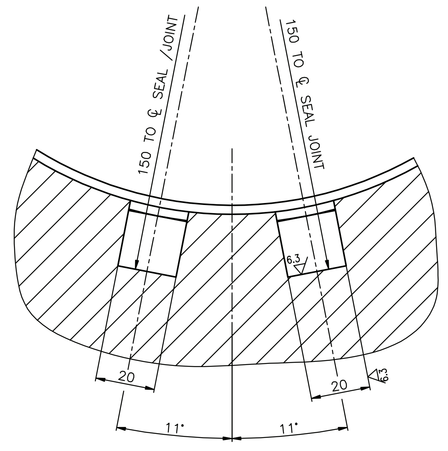

SECTION H–H
SCALE 1:1

VAR 00	REMARKS	ITEM No.	DESCRIPTION	STD	DRAWING No.	
			F/M OIL GUARD RING		01165256000	W90311652018 HW19793

MATERIAL CODE M4 / MATERIAL SPECN. M6 / UNIT WEIGHT / GS / ZONE

CARD TYPE–3 / CARD TYPE–1 / CARD TYPE–2

~~CMS No.~~ / C.B.O.M	STATUS OF DRG
01165256000	

AGREED DEPT	NAME	SIGN	DATE
TTX	S.SARKAR	sd/–	25.02.11
MTE	A.RANJAN	sd/–	25.02.11

GRADE OF UNTOL.DIM
M/CG.–℄/M/℄ AA0230208
WELDING–K/B/℄/Ø AA0621104
GAS CUTTING–'T3'AA0621101

TYPE OF PRODUCT OR NAME OF CUSTOMER/PROJECT

BHARAT HEAVY ELECTRICALS LTD. RANIPUR, HARDWAR

	NAME	SIGN	DATE
DRN	B.C.JOSHI	sd/–	08.02.11
CHD	A.K.SINGH	sd/–	08.02.11
APPD	A.S.SHAH	sd/–	26.02.11

NO. OF VAR –

REV	DATE	ALTERED	CHECKED
01	25.7.11	MANOJ	AKS

CHANGES DONE IN TR AS PER C/A NO. STE–11–F184

DEPT STE CODE 4100 | SCALE 1:2 | WEIGHT (KG) 80.34 | REF. TO ASSY. DRG. – | ITEM No. – | NO. OF ITEMS –

TITLE : OIL GUARD RING

CARD CODE | DRAWING NO. 0–11652–56000 | SHEET No. | No. OF SHEETS

AO SIZE

COPYRIGHT AND CONFIDENTIAL
THE INFORMATION ON THIS DOCUMENT IS THE PROPERTY OF BHARAT HEAVY ELECTRICALS LIMITED.
IT MUST NOT BE USED DIRECTLY OR INDIRECTLY IN ANY DETRIMENTAL TO THE INTERESTS OF THE COMPANY

TATTY/02214 / 25/11/05 REF.DRAWING No.

SIGN & DATE

INVENTORY No.

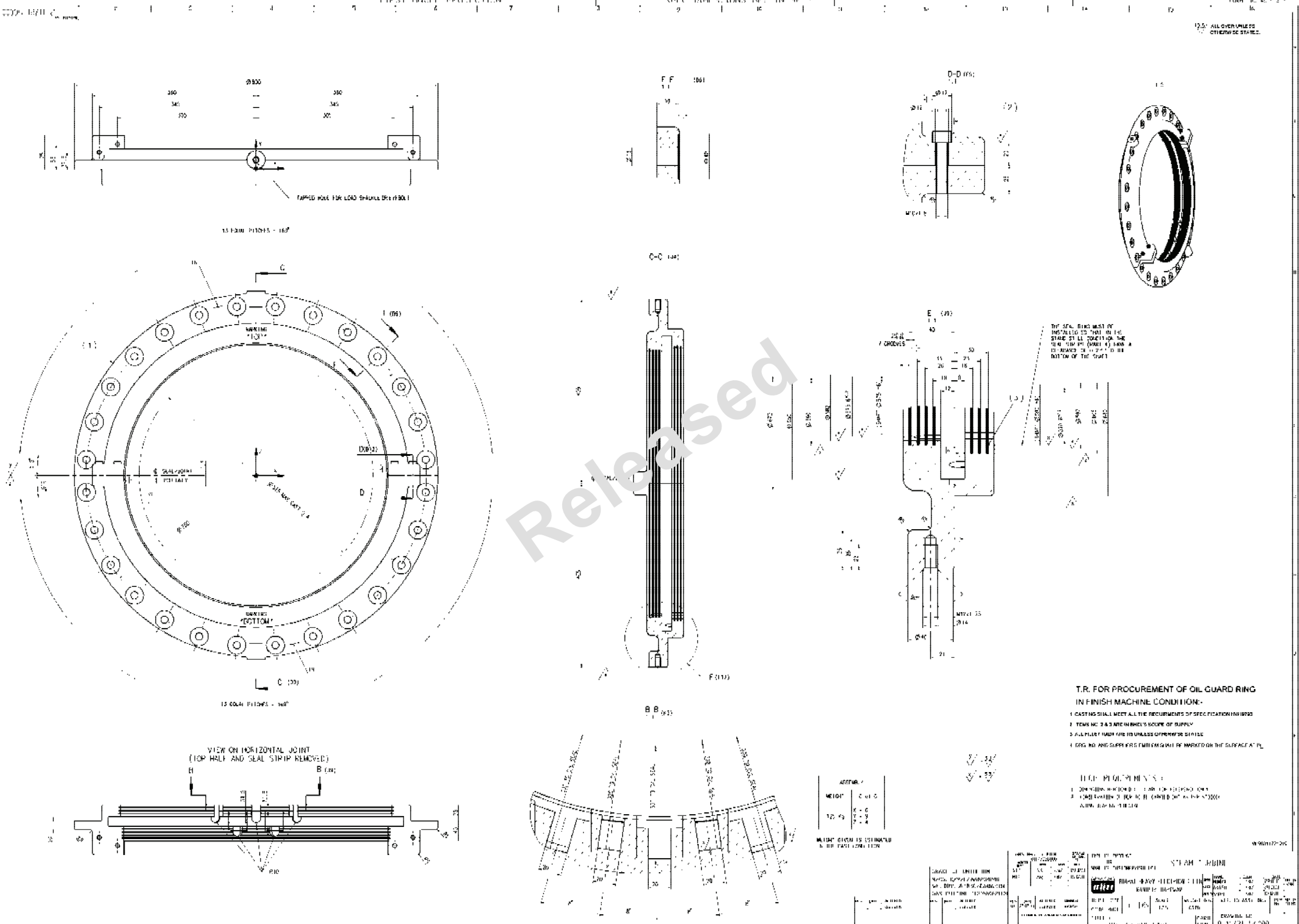
FIRST ANGLE PROJECTION
ALL DIMENSIONS ARE IN mm
ALL OVER UNLESS OTHERWISE STATED.
TAPPED HOLE FOR LOAD SHACKLE
13 EQUAL PITCHES - 180°
MARKING "TOP"
MARKING "BOTTOM"
13 EQUAL PITCHES - 180°
VIEW ON HORIZONTAL JOINT
(TOP HALF AND SEAL STRIP REMOVED)
D-D
C-C
E
F-F
B-B
Released
T.R. FOR PROCUREMENT OF OIL GUARD RING
IN FINISH MACHINE CONDITION:-
1. CASTING SHALL MEET ALL THE REQUIREMENTS OF SPECIFICATION
2. ITEMS NO. 2 & 3 ARE IN BHEL'S SCOPE OF SUPPLY
3. ALL FILLET HAVE R5 UNLESS OTHERWISE STATED
4. DRG. NO. AND SUPPLIER'S FIRM SIGNAL BE MARKED ON THE SURFACE AT PL
STEAM TURBINE
BHARAT HEAVY ELECTRICALS LTD
RANIPET TAMIL NADU
DRAWING NO.
0 17 21 16200

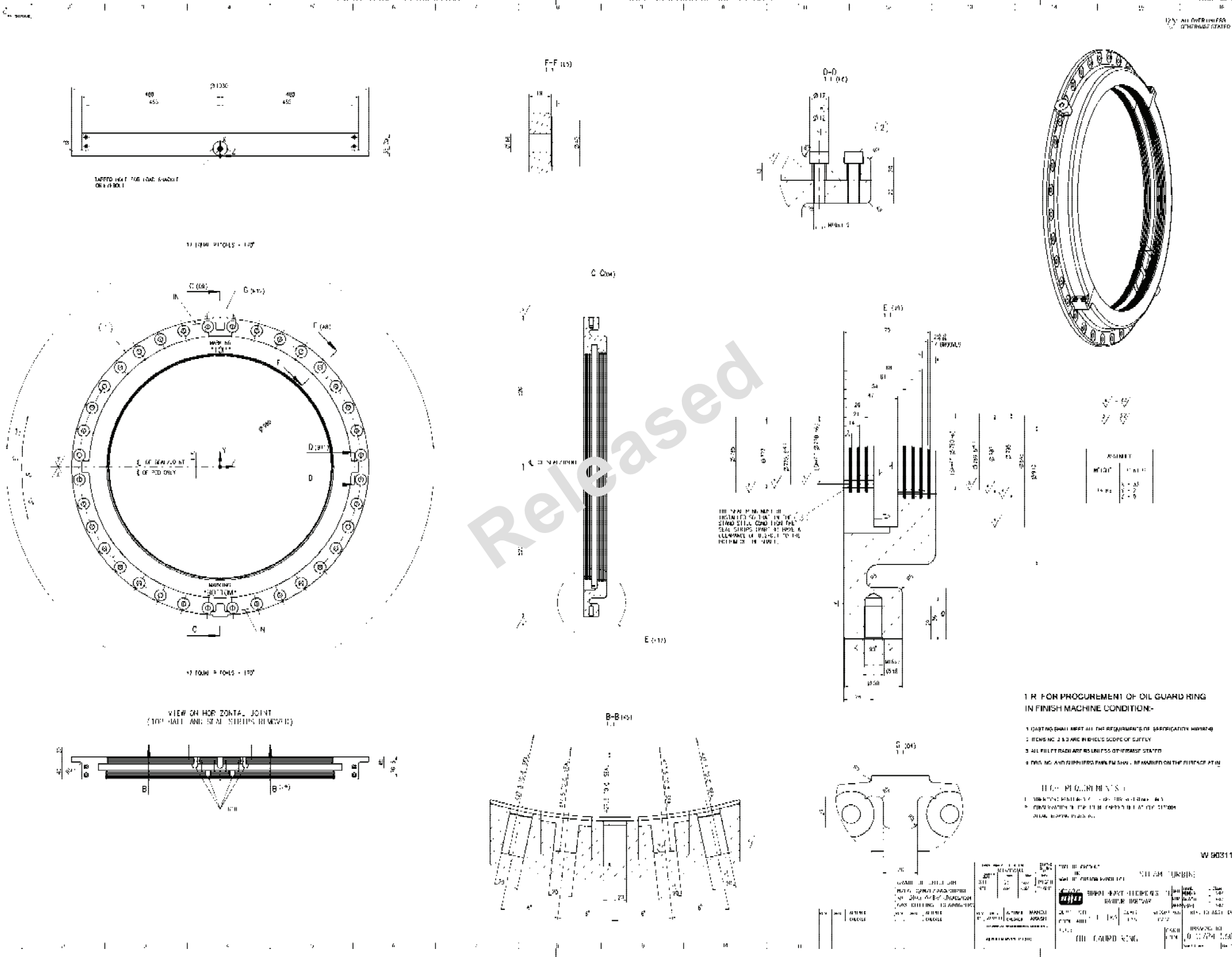
F-F
D-D
C
E
B-B
VIEW ON HORIZONTAL JOINT
1 R FOR PROCUREMENT OF OIL GUARD RING
IN FINISH MACHINE CONDITION:-
W 90311/24401B
STEAM TURBINE

Released

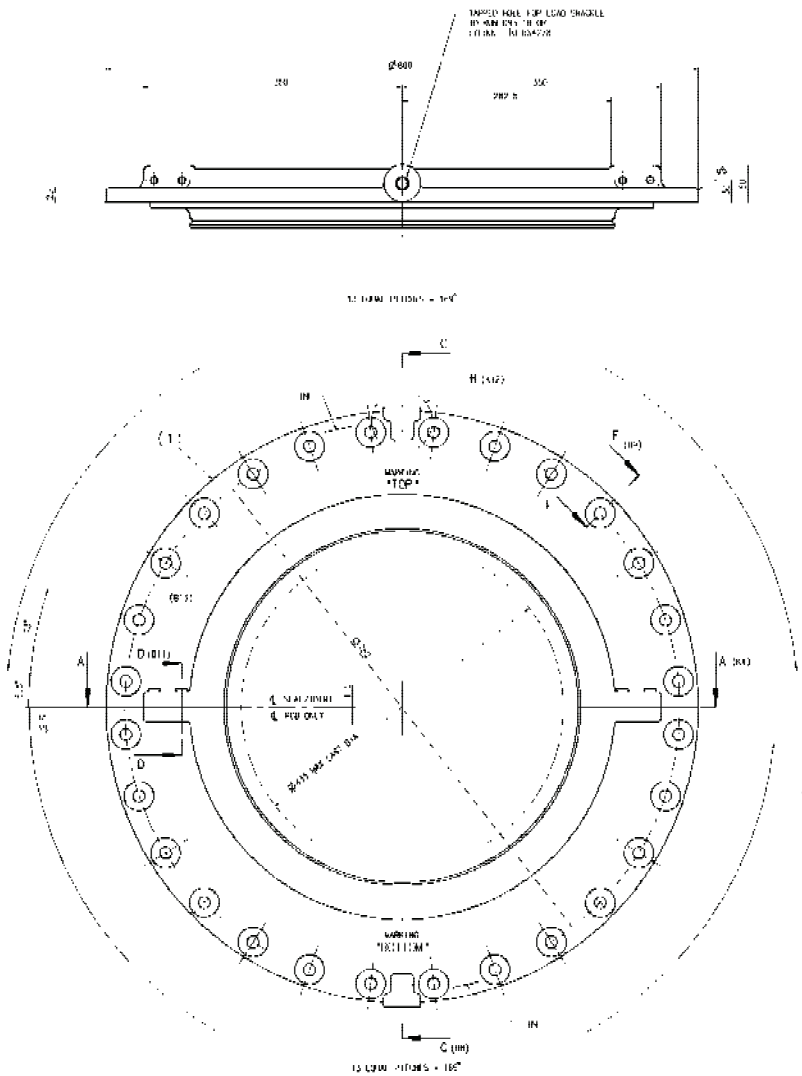

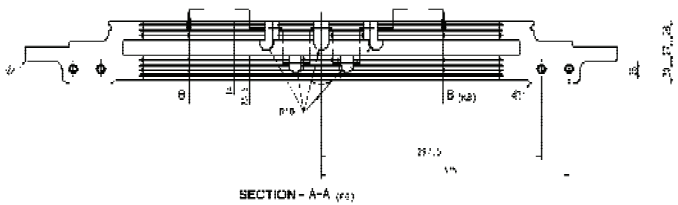

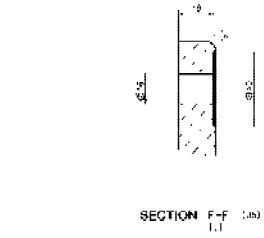

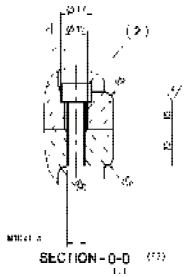

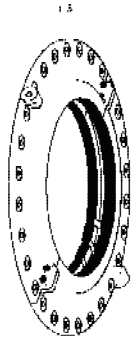

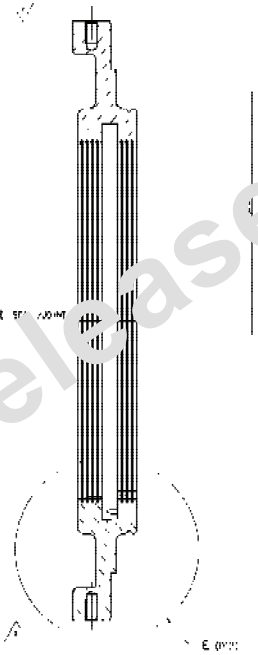

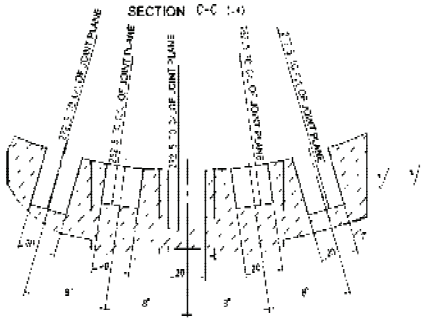

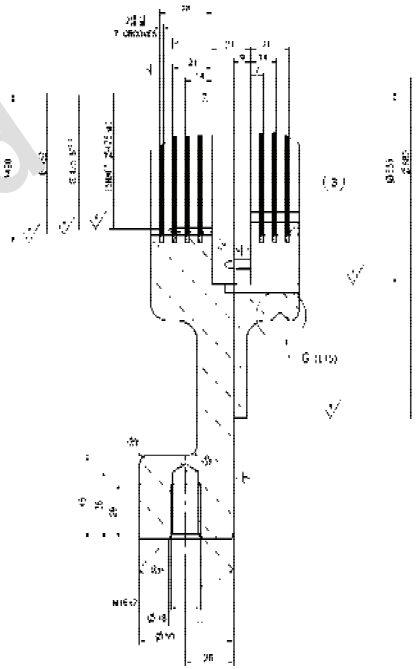

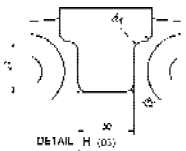

Released

T.R. FOR PROCUREMENT OF OIL GUARD RING
IN FINISH MACHINE CONDITION .

1. CASTING SHALL MEET ALL THE REQUIREMENTS OF SPECIFICATION [illegible]
2. ITEMS NO. 2 & 3 ARE INCLUDED IN SCOPE OF SUPPLY.
3. ALL FILLET RADII ARE BUSINESS STD FINISH STATED
4. DRG. NO. AND SUPPLIER'S FIRM DESIGN IS TO BE MARKED ON THE SURFACE AT [illegible]

TECHNICAL REQUIREMENTS

1. [illegible]
2. [illegible]

W90311820016

BHARAT HEAVY ELECTRICALS LTD.
SHIP.R HARDWAR

OIL GUARD RING (FRONT)

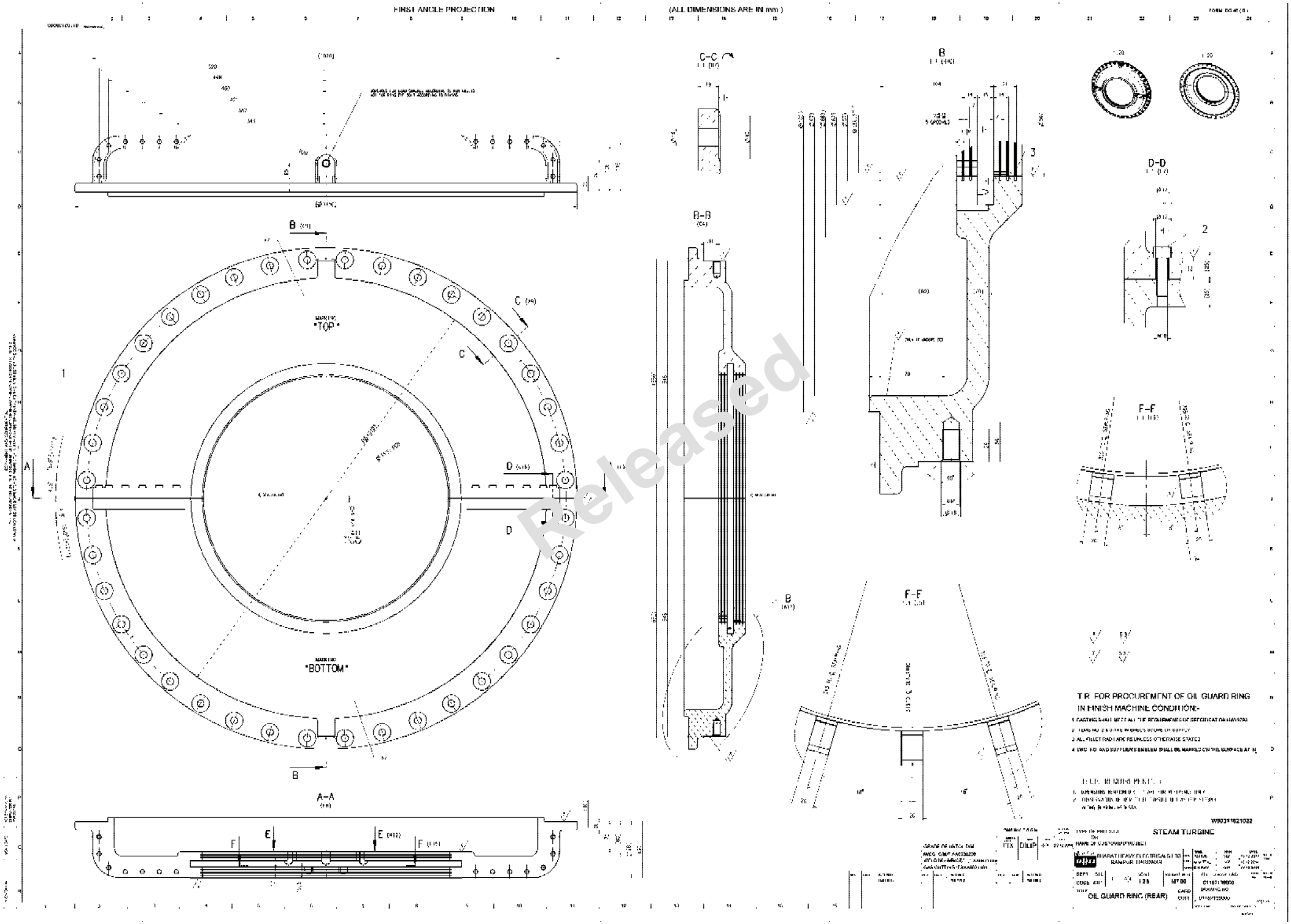
FIRST ANGLE PROJECTION
(ALL DIMENSIONS ARE IN mm)
"TOP"
"BOTTOM"
A-A
B-B
C-C
D-D
F-F
STEAM TURBINE
OIL GUARD RING (REAR)
BHARAT HEAVY ELECTRICALS LTD
RANIPUR HARDWAR
Released

FIRST ANGLE PROJECTION

(ALL DIMENSIONS ARE IN mm)

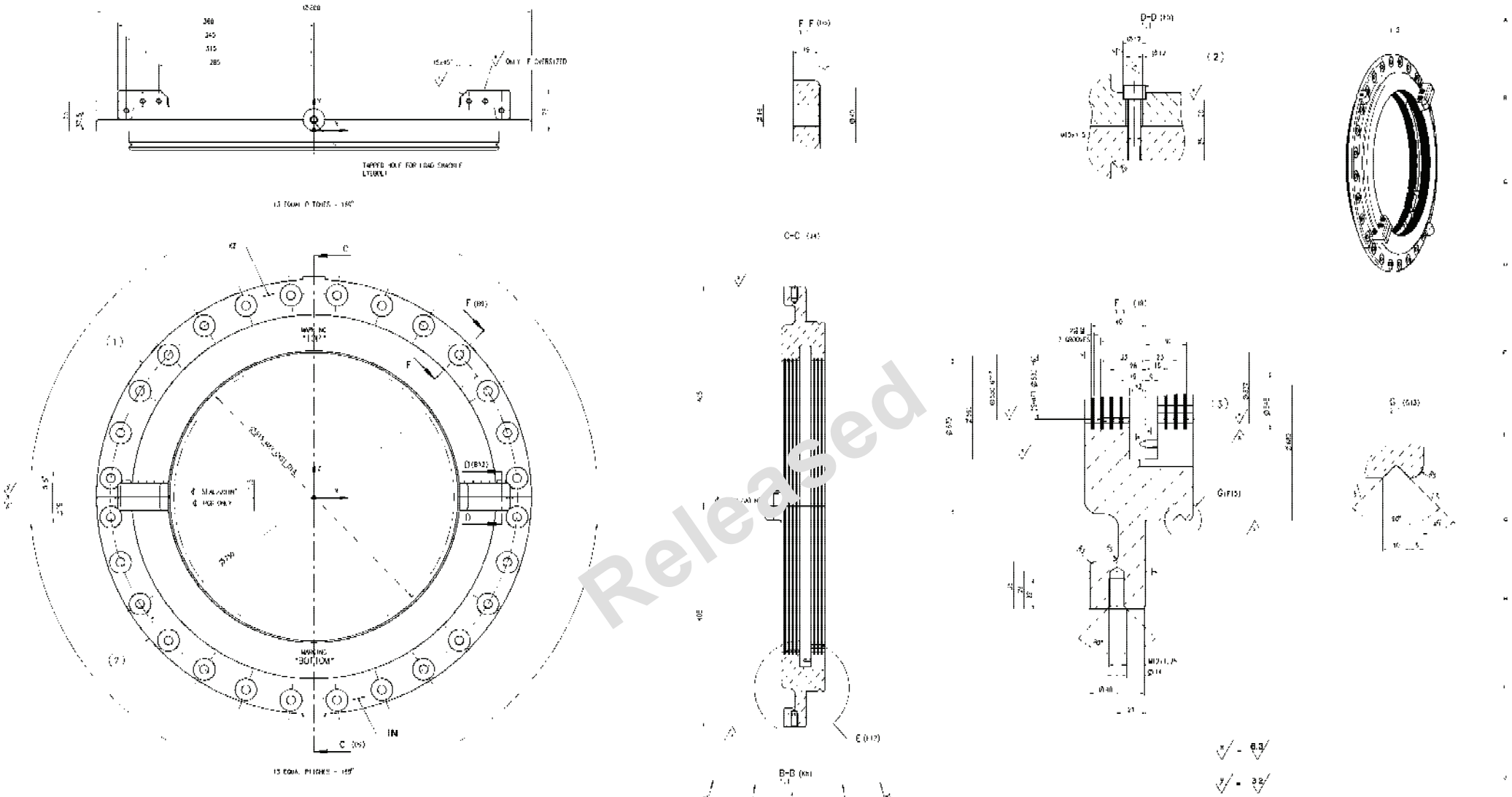

TECHNICAL REQUIREMENT FOR PROCUREMENT OF OIL GUARDRING IN FINISH MACHINED CONDITION.-

1-CASTING SHALL MEET ALL THE REQUIREMENTS OF SPECIFICATION [illegible]

2-ITEMS NO 233 ARE IN BHEL'S SCOPE OF SUPPLY

3-ALL HOLES MADE AFTER MACHINING STATIC

4-DRG NO AND SUPPLIER'S EMBLEM SHALL BE MARKED ON THE SURFACE AT IN

TECHNICAL REQUIREMENT

1-DIMENSION MENTIONED (-------) ARE REFERENCE ONLY .

2-CONSERVATION OF DGR TO BE CARRIED OUT AS PER S 133084 ALONG BEARING PEDESTAL

3-IDENTIFICATION ACCORDING TO [illegible] AT THE PLACE MARKED WITH N.

W-90311828024

TYPE OF PRODUCT STEAM TURBINE

OR

NAME OF CUSTOMER/PROJECT

BHARAT HEAVY ELECTRICALS LTD

RANIPUR, HARDWAR

DEPT 211

CODE 401

DRAWN

DRG NO 9-1128-98008

OIL GUARD RING (FRONT)

FIRST ANGLE PROJECTION

(ALL DIMENSIONS ARE IN mm)

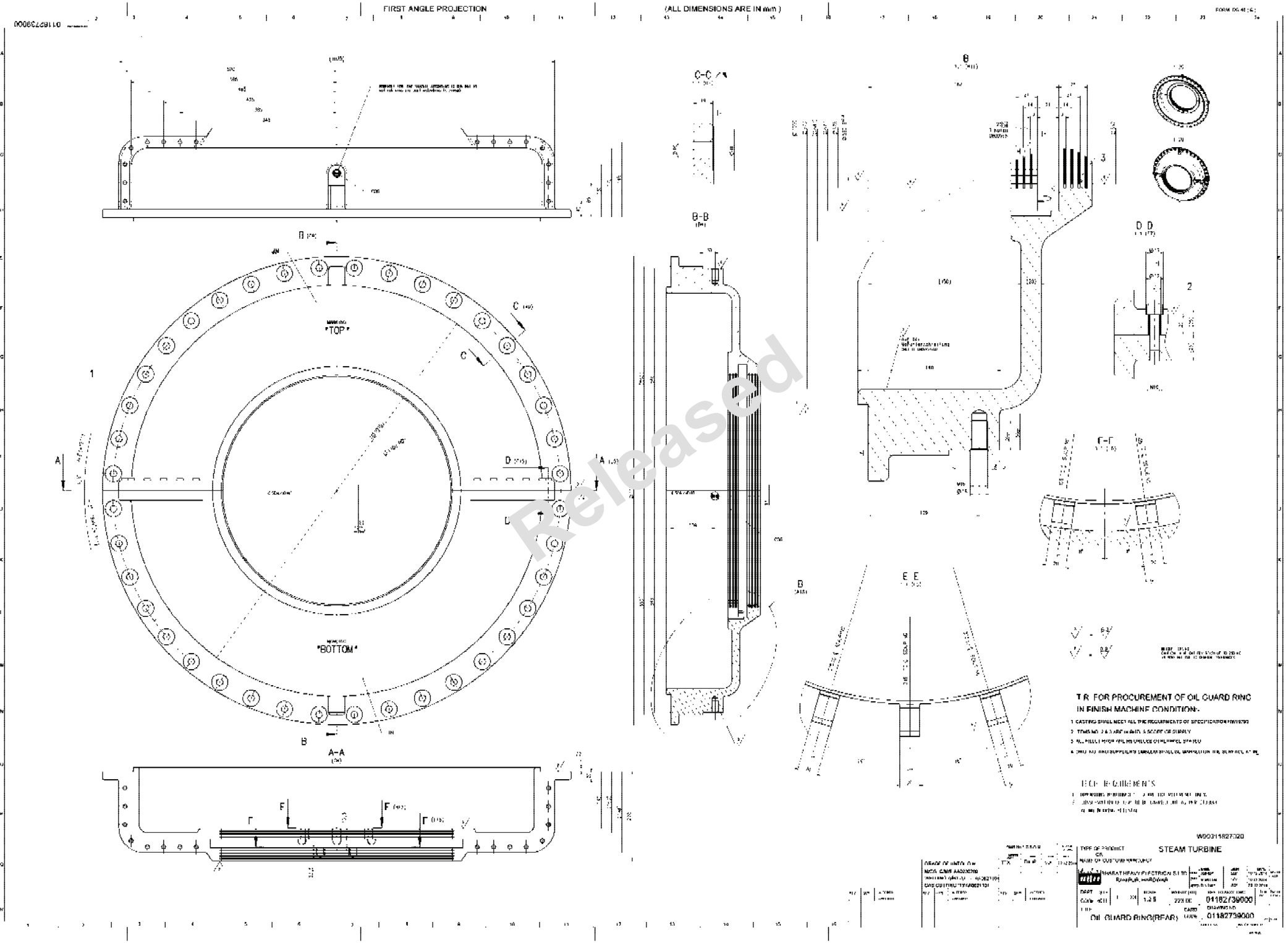

FIRST ANGLE PROJECTION (ALL DIMENSIONS ARE IN mm)

FORM DG 44(B)

DRAWING No. 2-11654-56901

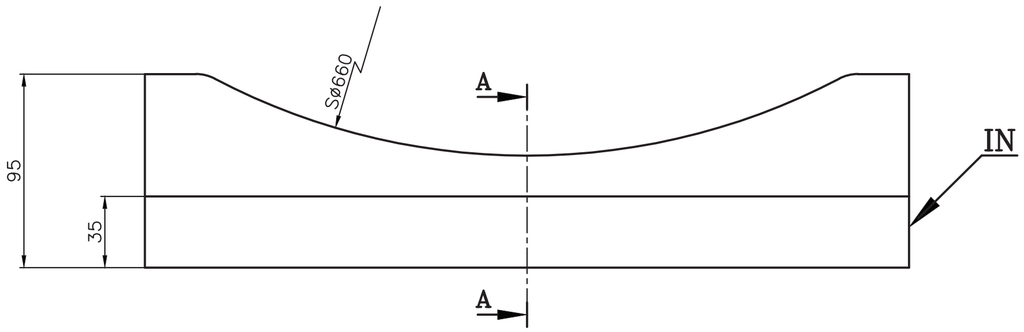

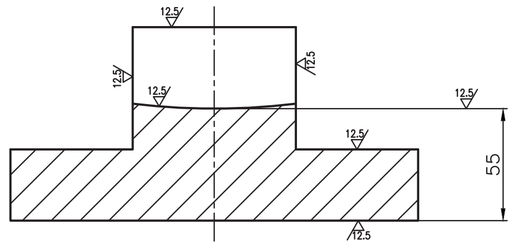

SECTION A–A

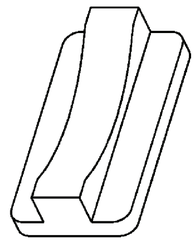

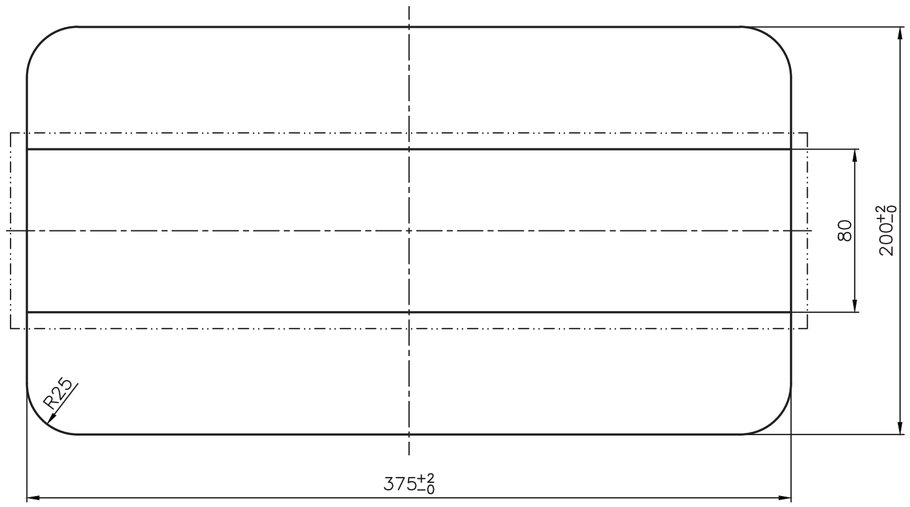

TECHNICAL REQUIREMENTS:–

1. THE CASTING SHALL BE MANUFACTURE AND DELIVERED IN ROUGH MACHINED CONDITION WITH 5±1 mm. MACHINING ALLOWANCE ON SURFACES MARKED WITH MACHINING SYMBOL 12.5.
2. THE CASTING SHALL BE DELIVERED TO MEET THE REQUIREMENTS OF SPECIFICATION NO. HW19793.
3. QUALITY LEVEL ; S4,V4 (S3,V1) ACCORDING TO HW0980829, HW0980831.
4. [ ] HIGH CONDITION ZONE (S3,V1)
5. IDENTIFICATION ACCORDING TO HW0400397 AT THE PLACE MARKED WITH **IN**.

ITEM NO.	DESCRIPTION	STD	DRAWING NO.								
	CASTING FOR SPHERICAL SOCKET		2–11654–56901		W91311654011			37	00		
					HW19793						
					MATERIALCODE	A	UNIT	UNIT WT.			GS
				VAR	MATERIALSPEC	C					

GRADE OF UNTOL.DIM
M/CG.–C/M/F AA0230208
WELDING–A/B/C/D AA0621104
GAS CUTTING–'T3'AA0621101

GMS No./ CBOM No. 01165456000			STATUS OF DRG
AGREED DEPT	NAME	SIGN	DATE
STE	ALOK SINGH	sd/–	18.06.11
TTX	RAVINDER	sd/–	29.08.11

TYPE OF PRODUCT
OR
NAME OF CUSTOMER/PROJECT

BHARAT HEAVY ELECTRICALS LTD.
RANIPUR, HARDWAR

	NAME	SIGN	DATE	NO. OF VAR
DRN	RAJPAL	sd/–	16.06.11	–
CHD	ASHISH	sd/–	16.06.11	
APPD	T.G.S.	sd/–	29.08.11	73 74

DEPT MTE	SCALE	WEIGHT (KG)	REF. TO ASSY. DRG.	ITEM No.	NO. OF ITEMS
CODE 4300	1:2	37.00	0–11654–56000	–	– 75 77

TITLE : CASTING FOR SPHERICAL SOCKET (R/M)

CARD CODE

DRAWING NO. 2–11654–56901 7 22 23 24

SHEET No. | No. OF SHEETS

SIZE A2

REV	DATE	ALTERED / CHECKED	REV	DATE	ALTERED / CHECKED	REV	DATE	ALTERED / CHECKED	REV	DATE	ALTERED / CHECKED	REV	DATE	ALTERED / CHECKED	REV	DATE	ALTERED / CHECKED

Sign & Date | Inventory No | 2116545801 7 A0117642090 A0117642090 0 <Ref.Drawing No>

COPYRIGHT AND CONFIDENTIAL
THE INFORMATION ON THIS DOCUMENT IS THE PROPERTY OF BHARAT HEAVY ELECTRICALS LIMITED. IT MUST NOT BE USED DIRECTLY OR INDIRECTLY IN ANY WAY DETERIMENTAL TO THE INTEREST OF THE COMPANY.

FIRST ANGLE PROJECTION (ALL DIMENSIONS ARE IN mm)

FORM DG 44(B)

DRAWING No. 2-11723-56901

3.2 ALL OVER

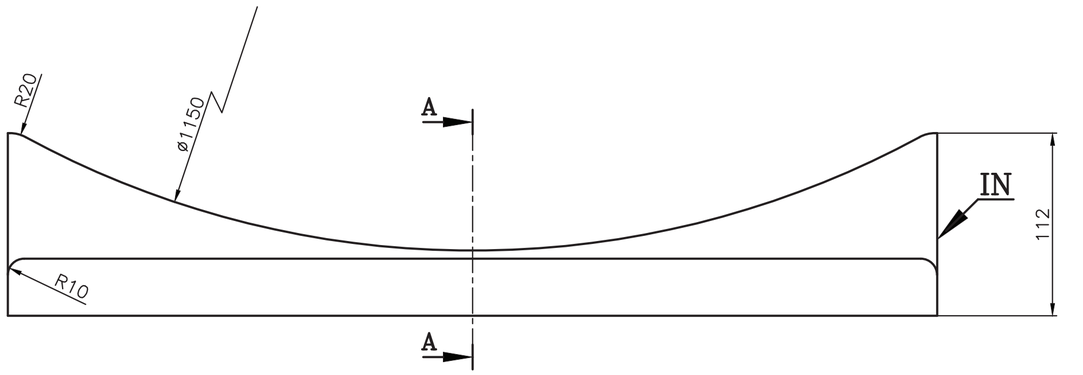

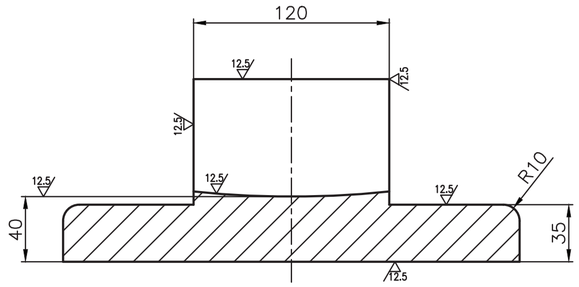

SECTION A–A

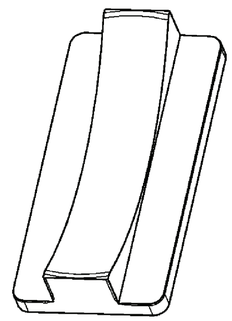

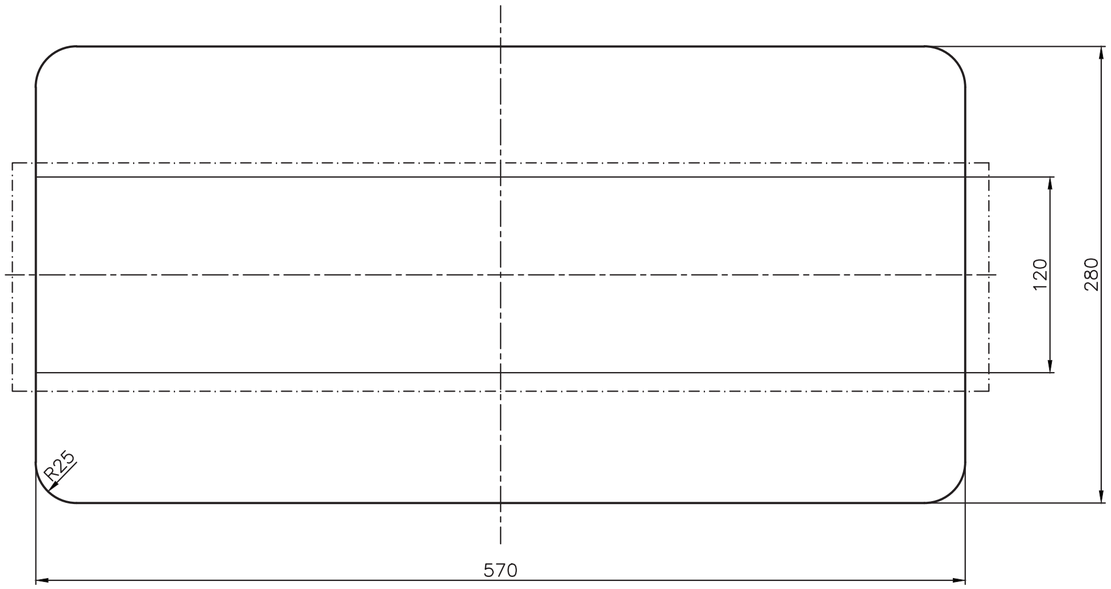

TECHNICAL REQUIREMENTS:–

1. THE CASTING SHALL BE MANUFACTURE AND DELIVERED IN ROUGH MACHINED CONDITION WITH 5±1 mm. MACHINING ALLOWANCE ON SURFACES MARKED WITH MACHINING SYMBOL 12.5.
2. THE CASTING SHALL BE DELIVERED TO MEET THE REQUIREMENTS OF SPECIFICATION NO. HW19793.
3. QUALITY LEVEL ; S4,V4 (S3,V1) ACCORDING TO HW0980829, HW0980831.
4. [ ] HIGH CONDITION ZONE (S3,V1)
5. IDENTIFICATION ACCORDING TO HW0400397 AT THE PLACE MARKED WITH **IN**.

ITEM NO.	DESCRIPTION	STD	DRAWING NO.		MATERIALCODE	A	UNIT	UNIT WT.	GS
	CASTING FOR SPHERICAL SOCKET		2-11723-56901		W92311723013			70 00	
					HW19793				
				VAR	MATERIALSPEC	C			

GRADE OF UNTOL.DIM
M/CG.–C/M/F AA0230208
WELDING–A/B/C/D AA0621104
GAS CUTTING–'T3'AA0621101

GMS No./ CBOM No. 01172356000			STATUS OF DRG U
AGREED DEPT	NAME	SIGN	DATE
STE	AKASH	sd/–	15.07.11
TTX	S.SARKAR	sd/–	10.09.11

TYPE OF PRODUCT
OR
NAME OF CUSTOMER/PROJECT

BHARAT HEAVY ELECTRICALS LTD.
RANIPUR, HARDWAR

	NAME	SIGN	DATE	NO. OF VAR
DRN	RAJPAL	sd/–	15.07.11	–
CHD	ASHISH	sd/–	15.07.11	
APPD	T.S.G.	–	10.09.11	73 74

DEPT MTE	SCALE	WEIGHT (KG)	REF. TO ASSY. DRG.	ITEM No.	NO. OF ITEMS
CODE 4300	1:2.5	70.00	0-11723-56000	–	– 75 77

TITLE : CASTING FOR SPHERICAL SOCKET (R/M)

CARD CODE

DRAWING NO. 2-11723-56901 7 22 23 24

SHEET No. 01 | No. OF SHEETS 01

SIZE A2

REV	DATE	ALTERED / CHECKED	REV	DATE	ALTERED / CHECKED	REV	DATE	ALTERED / CHECKED	REV	DATE	ALTERED / CHECKED	REV	DATE	ALTERED / CHECKED	REV	DATE	ALTERED / CHECKED

Sign & Date

Inventory No

3-11723-56015
A0671A1846
Ref.Drawing No>

COPYRIGHT AND CONFIDENTIAL
THE INFORMATION ON THIS DOCUMENT IS THE PROPERTY OF BHARAT HEAVY ELECTRICALS LIMITED. IT MUST NOT BE USED DIRECTLY OR INDIRECTLY IN ANY WAY DETERIMENTAL TO THE INTEREST OF THE COMPANY.

FIRST ANGLE PROJECTION (ALL DIMENSIONS ARE IN mm)

FORM DG 44(B)

DRAWING No. 2-11831-56901

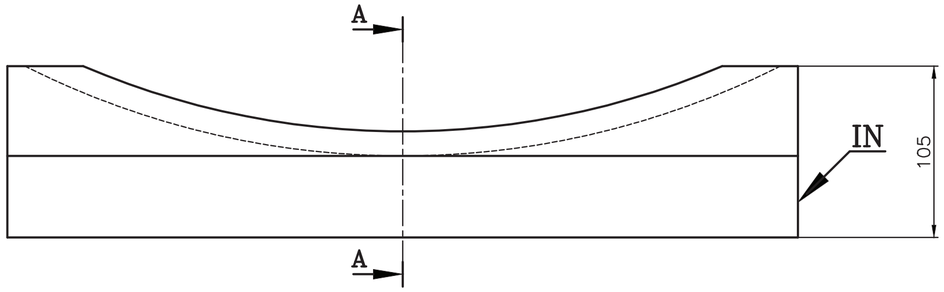

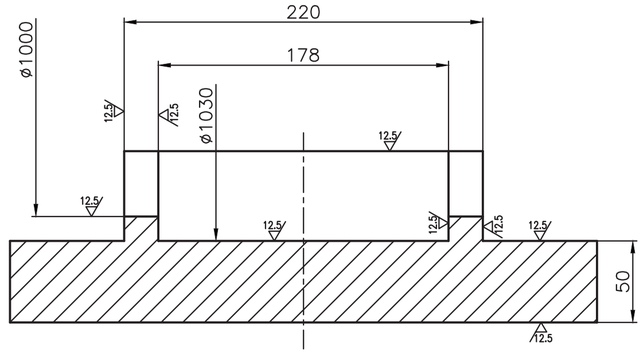

SECTION A–A

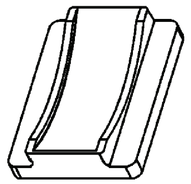

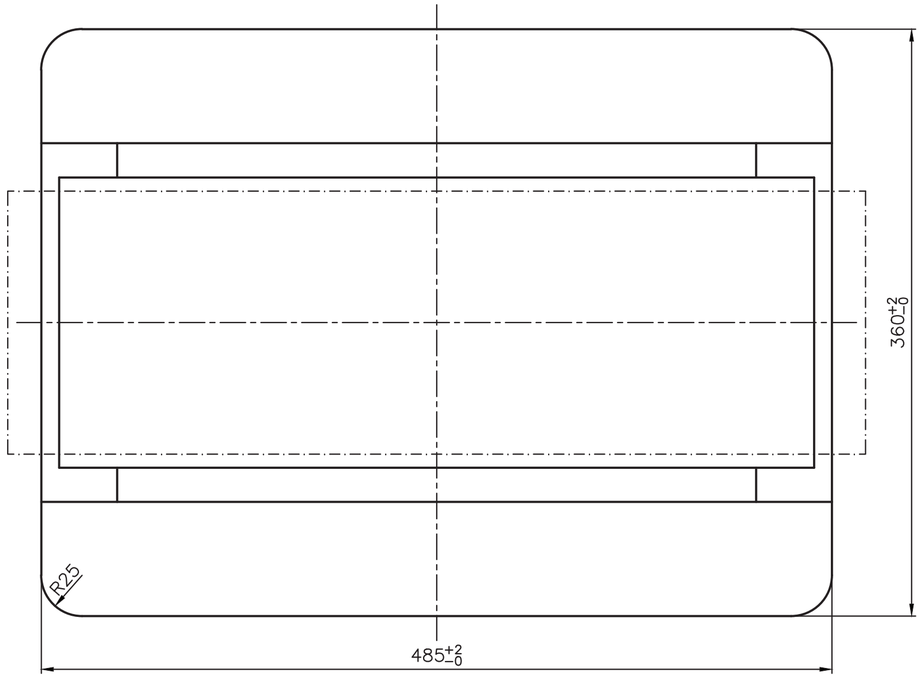

TECHNICAL REQUIREMENTS:–

1. THE CASTING SHALL BE MANUFACTURE AND DELIVERED IN ROUGH MACHINED CONDITION WITH 5±1 mm. MACHINING ALLOWANCE ON SURFACES MARKED WITH MACHINING SYMBOL 12.5.
2. THE CASTING SHALL BE DELIVERED TO MEET THE REQUIREMENTS OF SPECIFICATION NO. HW19793.
3. QUALITY LEVEL ; S4,V4 (S3,V1) ACCORDING TO HW0980829, HW0980831.
4. [ ] HIGH CONDITION ZONE (S3,V1)
5. IDENTIFICATION ACCORDING TO HW0400397 AT THE PLACE MARKED WITH **IN** .

ITEM NO.	DESCRIPTION	STD	DRAWING NO.	VAR	MATERIALCODE / MATERIALSPEC	A / C	UNIT	UNIT WT.	GS
	CASTING FOR SPHERICAL SOCKET		2-11831-56901		W91311831010 / HW19793			84 00	

GRADE OF UNTOL.DIM
M/CG.–Ø/M/Ø AA0230208
WELDING–K/B/Ø/Ø AA0621104
GAS CUTTING–'T3'AA0621101

GMS No./ CBOM No. 01183156000			STATUS OF DRG U
AGREED DEPT	NAME	SIGN	DATE
STE	RITESH	Sd–	18.08.11
TTX	RAVINDER	Sd–	18.08.11

REV	DATE	ALTERED / CHECKED	REV	DATE	ALTERED / CHECKED	REV	DATE	ALTERED / CHECKED	REV	DATE	ALTERED / CHECKED	REV	DATE	ALTERED / CHECKED	REV	DATE	ALTERED / CHECKED

TYPE OF PRODUCT OR NAME OF CUSTOMER/PROJECT: STEAM TURBINE

BHARAT HEAVY ELECTRICALS LTD. RANIPUR, HARDWAR

	NAME	SIGN	DATE
DRN	RAJPAL	sd/–	25.07.11
CHD	ASHISH	sd/–	25.07.11
APPD	T.S.G.	sd/–	18.08.11

NO. OF VAR –

DEPT MTE

CODE 4300

SCALE 1:2.5

WEIGHT (KG) 84.00

REF. TO ASSY. DRG. –

ITEM No. –

NO. OF ITEMS –

TITLE : CASTING FOR CYLINDRICAL SHEEL(R/M)

CARD CODE

DRAWING NO. 2-11831-56901

SHEET No. | No. OF SHEETS

SIZE A2

COPYRIGHT AND CONFIDENTIAL
THE INFORMATION ON THIS DOCUMENT IS THE PROPERTY OF BHARAT HEAVY ELECTRICALS LIMITED. IT MUST NOT BE USED DIRECTLY OR INDIRECTLY IN ANY WAY DETERIMENTAL TO THE INTEREST OF THE COMPANY.

2-11831-56009 A0511847 a A051018 Ref.Drawing No>

Sign & Date

Inventory No

FIRST ANGLE PROJECTION (ALL DIMENSIONS ARE IN mm)

FORM DG 44(B)

DRAWING No. 2-11832-58901

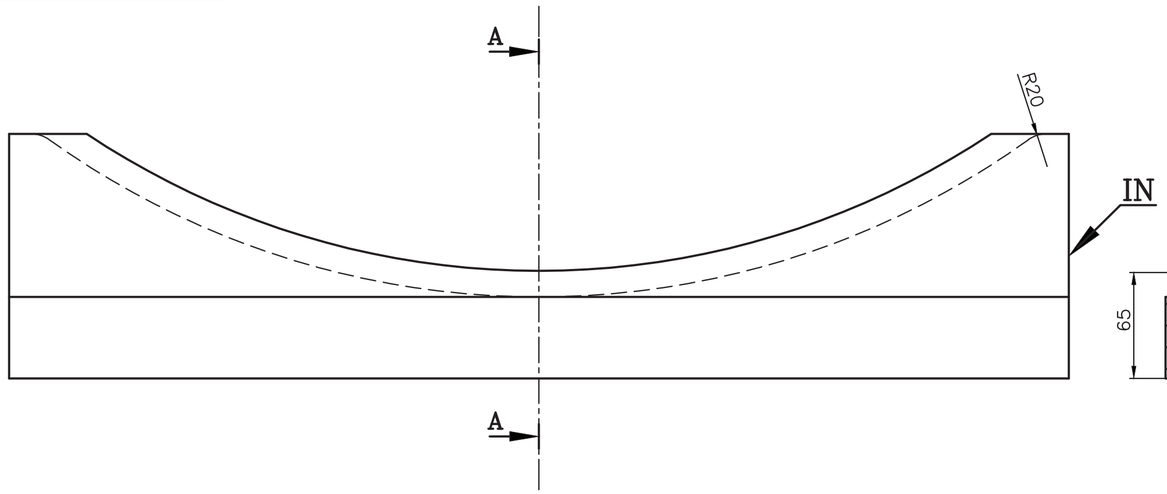

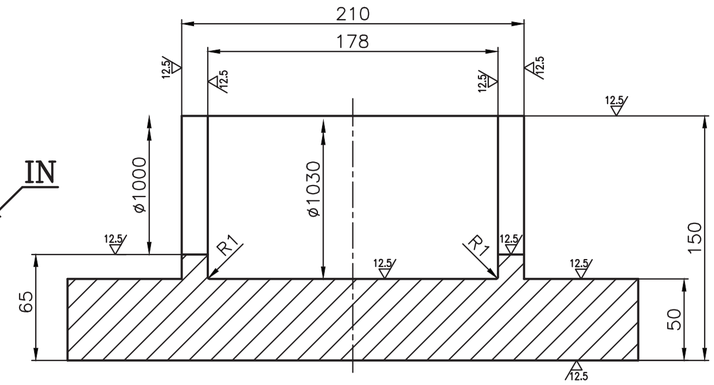

SECTION A–A

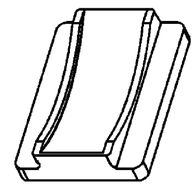

✓ ALL OVER EXCEPTED OTHERWISE STATED

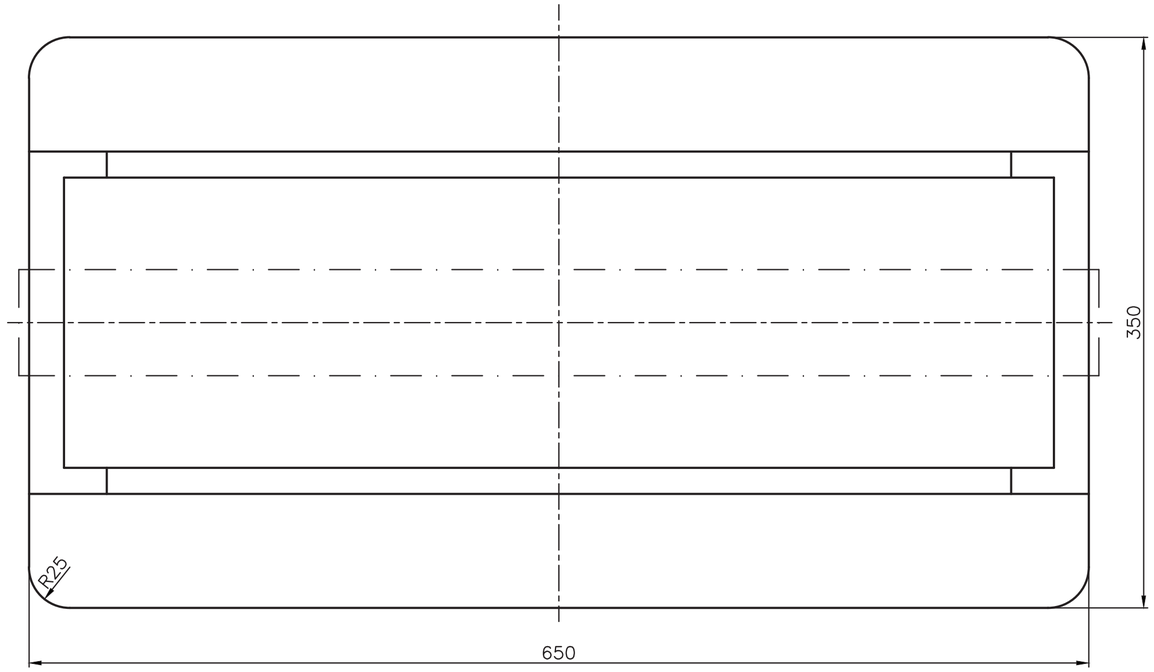

TECHNICAL REQUIREMENTS:–

1. THE CASTING SHALL BE MANUFACTURE AND DELIVERED IN ROUGH MACHINED CONDITION WITH 5±1 mm. MACHINING ALLOWANCE ON SURFACES MARKED WITH MACHINING SYMBOL 12.5.
2. THE CASTING SHALL BE DELIVERED TO MEET THE REQUIREMENTS OF SPECIFICATION NO. HW19793.
3. QUALITY LEVEL ; S4,V4 (S3,V1) ACCORDING TO HW0980829, HW0980831.
4. [:::] HIGH CONDITION ZONE (S3,V1)
5. IDENTIFICATION ACCORDING TO HW0400397 AT THE PLACE MARKED WITH **IN**.

ITEM NO.	DESCRIPTION	STD	DRAWING NO.	VAR	MATERIALCODE / MATERIALSPEC	A / C	UNIT	UNIT WT.	GS
	CASTING FOR CYLINDRICAL SHELL (ROUGH MACHINED)		2-11832-58901		W91311832017 / HW19793			122 00	

GRADE OF UNTOL.DIM	GMS No./ CBOM No. 01183258000			STATUS OF DRG U
	AGREED DEPT	NAME	SIGN	DATE
M/CG.–Ø/M/Ø AA0230208	STE	M.KUMAR	sd/–	23.05.12
WELDING–Ø/B/Ø/Ø AA0621104	TTX	S.KUMAR	sd/–	04.06.12
GAS CUTTING–'T3'AA0621101				

REV	DATE	ALTERED / CHECKED	REV	DATE	ALTERED / CHECKED	REV	DATE	ALTERED / CHECKED	REV	DATE	ALTERED / CHECKED	REV	DATE	ALTERED / CHECKED	REV	DATE	ALTERED / CHECKED

TYPE OF PRODUCT OR NAME OF CUSTOMER/PROJECT: **STEAM TURBINE**

BHARAT HEAVY ELECTRICALS LTD. RANIPUR, HARDWAR

	NAME	SIGN	DATE
DRN	ASHOK	sd/–	16.05.12
CHD	SUJEET	sd/–	17.05.12
APPD	T.S.G.	sd/–	04.06.12

NO. OF VAR –

DEPT MTE

CODE 4300

SCALE 1:2.5

WEIGHT (KG) 122.00

REF. TO ASSY. DRG. –

ITEM No. –

NO. OF ITEMS –

TITLE : CASTING FOR CYLINDRICAL SHEEL(R/M)

CARD CODE

DRAWING NO. 2-11832-58901

SHEET No. | No. OF SHEETS

SIZE A2

COPYRIGHT AND CONFIDENTIAL
THE INFORMATION ON THIS DOCUMENT IS THE PROPERTY OF BHARAT HEAVY ELECTRICALS LIMITED. IT MUST NOT BE USED DIRECTLY OR INDIRECTLY IN ANY WAY DETERIMENTAL TO THE INTEREST OF THE COMPANY.

2-11832-58021 Ref.Drawing No>

Sign & Date

Inventory No

Annex-3

COPYRIGHT AND CONFIDENTIAL

The information on this documents is the property of Bharat Heavy Electrical Limited It must not be used directly or indirectly in any way detrimental to the interest of the company

स्वत्वाधिकार एवं गोपनीय

इस प्रलेख में दी गई सूचना भारत हेवी इलेक्ट्रिकल्स की सम्पत्ति है इसका प्रयोग एवं आशय रूप से किसी भी तरह प्रकार, जो कि कम्पनी के हित में हानिकारक हो न किया जाए।

NODULAR GRAPHITE IRON CASTING EN-GJS-400-15U (GGG-40) WITH IDENTIFICATION NUMBER

1. GENERAL

This specification governs the quality of nodular cast iron of grade EN-GJS-400-15U according to EN 1563 (Material no: EN-JS1072).

2. APPLICATION

This material specification is valid for low stressed turbine components such as turbine casing, steam exhaust section, casing covers, bearing casings, bearing covers etc.

3. CONDITION OF DELIVERY

The casting shall be delivered to the condition as stated in ordering drawing.

4. REFERENCED DOCUMENTS

EN 1563, DIN 1685-1, EN 1370, BNIF 359-01, MSS-SP-55, EN 10204, HW0980829 (PS 1.0021), HW0980831(PS 1.0022)
Equivalent standard can also be used after approval from BHEL

5. DIMENSION & TOLERANCE

5.1 Casting shall be supplied to the dimension shown on the drawing accompanying the order.

5.2 **Tolerance:** General tolerances as per DIN1685 part-1, accuracy degree GTB18 are applicable.

6. MANUFACTURE

6.1 The method of manufacture is left to the discretion of the supplier unless otherwise mutually agreed. The supplier shall examine the suitability of casting with respect to ordering drawing. In case of any change required or for testing any modification required, the supplier shall discuss with the BHEL for approval.

If additional material thickness for dross remaines in delivery conditions, this shall be agreed with the purchaser. Therefore, in case of a prototype manufacturing, i. e. a casting which the supplier supplies to the purchaser for the first time, the supplier shall initiate a quality meeting with the purchaser.

6.2 The manufacturer shall forward manufacturing plan and Non destructive Test plan, for approval, to BHEL before the commencement of production. BHEL reserves the right to

inspect the production documents of the manufacturer. If a standard plan is available with the manufacturer this can be considered instead of individual manufacturing Plan.

6.3 Chaplet and inner iron chills are only allowed to be used after approval by the purchaser in a written form.

7. HEAT-TREATMENT

If the casting requires, according to the experience of the manufacturer, a ferritising heat-treatment for achieving the properties required in clause 10, or when the required properties are not achieved without heat treatment, and the necessity of ferritising heat treatment is felt, manufacturer shall inform the detailed process to BHEL.

8. CHEMICAL COMPOSITION

The chemical composition is to be selected by manufacturer to satisfy the required properties.

9. SELECTION OF TEST SAMPLES

9.1 The mechanical properties as given in clause 10.1 are to be determined for each casting .

9.2 For the main casing wall the mechanical properties shall be determined on test coupons according to EN 1563, table 6, geometry I or II, depending on the wall thickness where the test coupons are attached. For cross sections > 200 mm, e.g. the joint flange area, the mechanical properties shall be determined on test coupons which shall have the area 100 x 250 mm. The test coupons shall be attached to the casting according to casting specific criteria. Their position shall be documented by sketches or photos.

9.3 Before cutting off the test coupons shall be identified by the authorised inspector with the ID-No. and an appropriate issue showing the position on the casting. The test coupons must be heat treated together with the casting at every heat treatment.

9.4 The specimens for the determination of the mechanical properties shall be taken from the test coupon as near as possible to the cutting face.

Two test coupons (one from the main wall and one from the joint flange area) shall be sent to the purchaser for his material receipt inspection.

For castings having a weight <= 10,000 kg one test coupon is adequate.

10. MECHANICAL PROPERTIES

In the delivery conditions the casting shall have the following properties on integrally cast keel block at room temperature:

COPYRIGHT AND CONFIDENTIAL
The information on this documents is the property of Bharat Heavy Electrical Limited.It must not be used directly or indirectly in any way detrimental to the interest of the company
स्वत्वाधिकार एवं गोपनीय
इस प्रलेख में दी गई सूचना भारत हैवी इलेक्ट्रिकल्स की सम्पत्ति है इसका उपयोग एवं आदान प्रदान कर से किसी भी तरह प्रयोग जो कि कंपनी के हित में हानिकारक हो न किया जाए।

10.1 For wall thickness

	> 60mm	> 60 to 200mm	> 200mm (joint flange area)
0.2% Proof Stress*	: ≥ 250 N/mm²	≥ 240 N/mm²	≥ 220 N/mm²
Tensile strength	: ≥ 390 N/mm²	≥ 370 N/mm²	≥ 350 N/mm²
Elongation (l_o=5d_o)	: ≥ 14%	≥ 11%	≥ 10%
Redn. In area	: for information	for information	for information

* Determination of yield limit instead of 0.2% ps is permitted.

11 RECTIFICATION WELDING

Weldings are only allowed after approval by the purchaser in a written form.

Before starting any welding the supplier shall submit following Information to the purchaser:

- A welding procedure approval report (WPAR) on an appropriate welding
- A real list of welders qualified for such welding operations
- A welding procedure specification (WPS)

Excavations ready for welding shall be documented by a sketch or a photo noting the appropriate positions and dimensions

Areas to be welded shall be ground down to the flawless base metal. This shall be verified by a surface crack inspection, where severity level 1 according to HW0980829 shall be achieved.

Welded areas shall be NDE inspected. The inspection method shall be agreed upon with the purchaser.
The hardness of the weld material, the heat affected zone and the base material shall be measured and documented accordingly

11.2 Testing of weld spots

All the rectification welding are subjected to magnetic particle or dye penetration test for determination of surface crack after grinding (and if agreed upon, after heat treatment).

A volume test shall be conducted for weld portion with a depth of greater than 50% of wall thickness. The cracks in the rectified areas as well as surrounding area are not permissible. Quality level of repaired zone shall be same as the quality level of casting in that zone.

COPYRIGHT AND CONFIDENTIAL
The information on this documents is the property of Bharat Heavy Electrical Limited It must not be used directly or indirectly in any way detrimental to the interest of the company
स्वत्वाधिकार एवं गोपनीय
इस प्रलेख में दी गई सूचना भारत हेवी इलेक्ट्रिकल्स लि की सम्पत्ति है इसका प्रयोग एवं व्यापारिक रूप से किसी भी तरह प्रयोग, जो कि कंपनी के हित में हानिकारक हो न किया जाए।

REV		निर्माणकर्ता WORKED BY	SKUMAR		10.5.2010
02		जांचकर्ता CHECKED BY	TSG		10.5.10

12 NDT AT SUPPLIER'S WORKS

12.1 General

Due to lack of standards for NDT of nodular iron casting, the basis for NDT is the plant standard HW0980829 and HW0980831 independent of standard specified in ordering drawing.

As far as there are no stronger requirements on the quality levels in the additional ordering data, e.g. drawings, the general quality level for casting is quality level 4, i.e. S4 and V4.
The surfaces of the castings shall be clean and allow for visual inspection as per MSS SP-55.
If NDE is performed, the surfaces shall be fit for testing, e.g. ground.

12.2 Scope of Inspection

Following **NDT** shall be performed in delivery condition :

a) **Visual inspection** of all outer and inner surfaces.

b) **MPI** according to HW0980829 on following areas:

1) Areas with quality level S3 or better (see order drawing), according to HW0980829 e.g. lifting elements like lifting lugs, etc., especially the transition to the body of casting.

In case of excess material in the testing areas which will be machined off in the final shape, MPI can be omitted.

2) Lifting elements like lifting lugs etc., especially the transition to the body of the casting.

3) Welded areas, if any.

On faces being inaccessible for a proper MPI, DPT may be performed instead.

c) **Volume examination by Ultrasonic testing** as per HW0980831 on following areas :

- Supports, guiding areas.
- Lifting elements like lifting lugs etc.
- Positions with grouted bolts.
- Convex sealing areas
- Areas with special requirements marked in the drawing or in a sketch.
- Welded areas, if any.

12.3 Criteria for Registration and Decision :

a) **Visual Inspection**

Criteria of standard MSS SP-55, Type I, III to VII, IX, X, XII shall be applied. Surface according to sketches a) and b) are acceptable.

COPYRIGHT AND CONFIDENTIAL
The information on this documents is the property of Bharat Heavy Electrical Limited.It must not be used directly or indirectly in any way detrimental to the interest of the company
स्वत्वाधिकार एवं गोपनीय
इस प्रलेख में दी गई सूचना भारत हेवी इलेक्ट्रिकल्स की सम्पत्ति है इसका प्रयोग एवं आपरूपण रूप से किसी भी तरह प्रयोग, जो कि कंपनी के हित में हानिकारक हो न किया जाए।

REV		निर्माणकर्ता WORKED BY	SKUMAR		10/5/10
02		जांचकर्ता CHECKED BY	TSG		10/5/10

INVENTORY NO. P-3162
SIGN & DATE 10/5/10

b) **Surface crack inspection**

Severity level S4 according to HW0980829 is valid if there are no special requirements mentioned in the drawing.

Remarks:

In case of excess material on sealing areas or flange faces which will be machined off, the quality classes V1 to V4 approved by UT instead of the quality class S1 to S4 shall be applied accordingly

c) **Volume examination**

Criteria of standard HW0980831 shall be applied for recording. As far as there are no higher requirements mentioned in the drawing - generally criteria of standard HW0980831, quality class V4 shall be applied for decision.

Recordable indications, located in machining areas, can be judged individually by BHEL.

13. TEST CERTIFICATE

The supplier shall furnish 4 copies of test certificate B according to DIN 50049 to BHEL unless otherwise specified on the order. The test certificate shall contain the following, which must reach BHEL before or along with the casting.

a. BHEL Reference:

- Material specification.
- Order number.
- Name and drawing number of the casting.
- Identification No.

b. Supplier's Reference:

- Name or emblem.
- Melt number and grade EN-GJS-400-15U.
- Method of melting.
- Photograph of sketch of the location of the keel block.
- Heat treatment details including actual temperature, holding times and cooling rates should be presented in the form of a sketch, if carried out.
- Photograph of sketches with complete view showing the weld repair on the entire casting.
- Reference to the list of qualified welders and to the approved welding procedure.

c. Test results:

- Melt analysis.
- Mechanical test and its individual value including hardness test
- Test report on magnetic particle inspection/dye penetration examination/ultrasonic.

COPYRIGHT AND CONFIDENTIAL
The information on this documents is the property of Bharat Heavy Electrical Limited. It must not be used directly or indirectly in any way detrimental to the interest of the company.
स्वत्वाधिकार एवं गोपनीय
इस दस्तावेज में दी गई सूचना भारत हैवी इलेक्ट्रिकल्स की सम्पत्ति है इसका प्रयोग एवं आलेख रूप से किसी भी तरह प्रयोग, जो कि कंपनी के हित में हानिकारक हो न किया जाए।

REV		निर्माणकर्ता WORKED BY	SKUMAR		10.5.2010
02		जांचकर्ता CHECKED BY	TSG		10.5.10

INVENTORY NO. P-3162

Annexure-4

15

~~Annexure-3~~

NON-DISCLOSURE AND PROPRIETARY INFORMATION AGREEMENT

BETWEEN

_____**(Name of the Vendor).**, having its registered offices in _____**(Address of Vendor),** registered under the no. _____ of the Companies' register of _____**(Name of Place and Country),** capital stock of _____**(Value),** with a place of business in _____**(Name of Place and Country)** (hereinafter referred to as "_____**(Name of Vendor)");**

AND

Bharat Heavy Electricals Ltd a company incorporated under the Indian Companies Act 1956 having its registered offices at BHEL House, Siri Fort. New Delhi -110 049 and having one of its works at Heavy Electrical Equipment Plant, Ranipur, Haridwar-249403 (Uttarakhand), India registered under the No. 4281 of 1964-65 of the companies register of Delhi, capital stock of Rs 4895.2 million with a place of registered office in New Delhi (hereinafter referred to as "BHEL") hereinafter also referred to individually as "the Party" or collectively as "the Parties".

BACKGROUND

This Agreement sets forth the rights and obligations of the Parties with respect to the use, handling, protection and safeguarding of Proprietary Information that is disclosed by and between the Parties.

WHEREAS

A) the Parties wish to pursue exploratory discussions concerning a possible collaboration between them in relation to the Program defined in Exhibit 1;

B) during the ensuing discussions and negotiations it may occur that either Party discloses to the other technical, financial or business information of a proprietary or confidential nature, which the Parties intend to protect against, making it available, by any means to any third person, and other unauthorized use and/or further disclosure by the recipient, in accordance with the terms and conditions set forth herein;

NOW, THEREFORE, the Parties have agreed as follows:

1. The term "Proprietary Information" shall mean any information or data of whatsoever kind of a confidential or proprietary nature, including but not limited to, commercial information, know how and technical information in the form of designs, drawings, concepts, requirements, specifications, software, interfaces, components, processes, or the like, that have been or will be disclosed by either Party to the other pursuant to this Agreement, either in writing, orally or other form, which is designated as "Proprietary" or "Confidential" by the disclosing Party by means of formal declaration or an appropriate stamp, legend or any other written or orally notice .

2. Proprietary Information may be conveyed, without limitation, through any written or printed documents, samples, models, electronic form on disk, tape, other storage media or any other means of disclosing such Proprietary Information that either Party may elect to use during the life of this Agreement, but if an originating Party originally discloses information orally or visually, the receiving Party will protect such information as Proprietary Information to the extent that the originating Party :
   - identifies the Information as Proprietary at the time of original disclosure,
   - summarizes the Proprietary Information in writing .

Information stored in electronic form on disk, tape, other storage media will be adequately marked if a proprietary legend displays when the information originally runs on a computer system and when the information is printed from its data file. Proprietary Information also includes any information which can be obtained by examination, testing or analysis of any hardware or material substance or any component part of such hardware or material substance provided by the Disclosing Party even though the requirements in Clause 1 for marking and designation have not been fulfilled.

3. Each Party, to the extent of its rights to do so, shall disclose to the other only the Proprietary Information which the disclosing Party deems appropriate to fulfil the objectives of this Agreement. The Parties hereby represent that the disclosure of Proprietary Information by and between themselves shall be made in compliance with, and subject to the laws and regulations of the Disclosing Party's country.

4. The receiving Party hereby agrees and covenants that, from the effective date of this Agreement until the expiry date as per article 11 and the following period as per article 12, the Proprietary Information that either Party receives from the other shall:

a) be protected and kept in strict confidence by the receiving Party which must use the same degree of care it uses to protect its own confidential information and in no case less than a reasonable care;

b) be only disclosed to and used by those persons within the receiving Party's organization or that of its parent or controlled companies who have a need to know and solely for the purposes specified in this Agreement, and be treated by such persons or entities with the same degree of care and subject to the same restrictions;

c) to procure that each third party to whom Proprietary Information is disclosed under this Agreement is made aware of the provisions of this Agreement prior to such disclosure to it and that each such third party is

12

bound by obligations of confidentiality which are no less onerous than those contained in this Agreement;

d) neither be disclosed nor caused to be disclosed or made available, either directly or indirectly, to any third Party or persons other than those mentioned in subparagraph b) above or other persons upon which both of the contractual Parties shall agree in an amendment to this Agreement;

e) not to copy, reproduce or reduce to writing any part of such Proprietary Information except as may be reasonably necessary for the purpose referred to in the Recitals of this Agreement

PROVIDED THAT the Receiving Party shall be entitled to make any disclosure required by court order or government or regulatory requirement of the Disclosing Party's Proprietary Information subject to notifying the Disclosing Party as soon as possible of such requirement

5. Any Proprietary Information and copies thereof disclosed by either Party to the other shall remain the property of the disclosing Party and shall be immediately returned or destroyed by the receiving Party upon request.

6. The receiving Party shall have no obligations or restrictions with respect to any Proprietary Information for which the receiving Party can prove that:

a) is in or which comes into the public domain otherwise than as a result of a breach of this Agreement by any person to whom a disclosure of Proprietary Information is made as permitted under this Agreement or of any other duty of confidentiality relating to the Proprietary Information of which the Receiving Party has knowledge; or

b) it has been in its possession without restriction at the time of the disclosure, as evidenced by written documentation in its files; or

c) it has been lawfully received from a third Party without breach of this Agreement; or

d) it has been or is published without violation of this Agreement; or

e) it has been independently developed in good faith by employees of the receiving Party who did not have access to the Proprietary Information; or

f) it has not been properly declared, designated or confirmed as Proprietary or Confidential; or

g) the protection period has expired according to articles 11 and 12 of this Agreement.

7. With respect to any exchange of Proprietary Information which may occur as a result of this Agreement, it is expressly understood and agreed that the persons listed in Exhibit 2 shall, on behalf of the respective Parties, be the exclusive individuals authorized to receive from and transmit to the other Party Proprietary Information under this Agreement. Each Party may replace at any time its respective authorized individuals identified in such Exhibit 2, within its own organization. Any such new designation by a Party shall be made by written notice to the other at the address indicated in such Exhibit 2.

8. Any Proprietary Information which is identified as "Classified Information", or whose export is subject to an export license, shall be identified as such by the disclosing Party at the time of disclosure and the disclosure, protection, use and handling thereof, shall remain subject to the security procedures and restrictions imposed by the disclosing Party's Government.

9. The disclosure of Proprietary Information under this Agreement by either Party to the other shall not be construed as granting to the receiving Party any right, whether express or implied by licence or otherwise, on the matters, inventions or discoveries to which such information pertains, or as granting any trademark, patents, copyrights, trade secret right or other form of intellectual property right.

10. Nothing in this Agreement may be construed as an obligation of either Party to disclose any Proprietary Information to the other, or to enter into any subsequent contractual relationship with such other Party.

11. This Agreement covers the exchange of Proprietary Information which may be made by either Party to the other until ten years from signing of the agreement or any extension thereto which may be agreed upon by the Parties in writing. Proprietary information relevant to the Program detailed in Exhibit 1, already made available to the other contractual Party before the effective date, shall also be protected under this Agreement.

It is understood by the parties that, prior to disclosure, the Disclosing Party shall have obtained any government authorisation needed for the export of the Proprietary Information

12. The expiry of the period contemplated in Article 11 .of this Agreement shall not relieve the receiving Party from complying with the obligations imposed by Article 4 here above with respect to the use and protection of the Proprietary Information, received prior the date of such expiry, for a period of ten (10) years after such expiry.

13. The Parties are independent contractors. Each will bear all costs and expenses in connection with this Agreement. This Agreement is intended to facilitate only the exchange of Proprietary Information and is not intended to be, and shall not be construed to create a teaming agreement, joint venture, association, partnership, or other business organisation or agency arrangement and no Party shall have the authority to bind the other without the other Party's separate prior written agreement .

14. This Agreement shall be governed by and shall be interpreted in accordance with the substantive Indian laws. Irrespective of the foregoing each Party shall remain

bound by the provisions of its own national laws and regulations with respect to the transfer or use of Classified Information or information whose export is subject to an export license.

15. All disputes among the Parties, in connection with or arising out of the existence, validity, construction, performance and termination of this Agreement (or any terms thereof), which the Parties are unable to resolve among themselves, shall be finally settled by an Arbitration. The Arbitration shall be held in Haridwar (India), in English language, in accordance with the rules laid down in the arbitration and reconciliation act of India.

16. The foregoing constitutes the entire Agreement among the Parties with respect to the subject matter hereof and supersedes and cancels all prior representations, negotiations, commitments, undertakings, communications, either oral or written, acceptances, understandings and agreements among the Parties with respect to or in connection with any of the matters to which such Agreement applies or refers.

17. Notices to _____**(Name of Vendor)** shall be made at the following address:

(Complete Address of Vendor)
Attention: Mr. _____**(Name of the Authorised Person of Vendor)**

Notices to BHEL shall be made at the following address:
BHARAT HEAVY ELECTRICALS LIMITED,
HEAVY ELECTRICAL EQUIPMENT PLANT,
Ranipur, Haridwar-249403 (Uttarakhand), India
Attention: **(Name of the PPX Incharge)**

18. The effective date of this Agreement shall be the date of the last signature appearing herein.

8

IN WITNESS WHEREOF, each of the Parties has caused this Agreement, to be executed by its duly authorized officer.

Date :

Signed for and on behalf of	Signed for and on behalf of
(Name of Vendor)	BHEL
By:	By:
Title:	Title:
Signature:	Signature:

7

EXHIBIT 1

to the

NON-DISCLOSURE AGREEMENT

between

_____**(Name of Vendor)**

and

BHARAT HEAVY ELECTRICALS LIMITED

dated:

_____

The Non Disclosure Agreement covers the exchange of Proprietary Information which may occur during the discussions and negotiations in view of a possible cooperation between the Parties in the following programs:

-Description of Material or Services for which the order is placed

_____**(Name of Vendor)** list of products that require an exchange of Proprietary Information which may be occur during the discussions and negotiations in view of a possible cooperation for the above programs :

6

EXHIBIT 2

to the

NON-DISCLOSURE AGREEMENT

between

_____**(Name of Vendor)**

and

Bharat Heavy Electricals Ltd.

dated:

Personnel of the Parties authorized to receive and/or transmit Proprietary Information under this Agreement:

For **(Name of Vendor)**	For Bharat Heavy Electricals Ltd.
(Name of Person)	Mr.
Tel.	Tel. 01334
Fax	Fax 01334
Address.	Address. Main Administration Building BHEL, HEEP, Haridwar India
	Mr.
Tel.	Tel. 01334
Fax	Fax 01334
Address	Address. Main Administration Building BHEL, HEEP, Haridwar India

QUALITY PLAN							PAGE 1 OF 2
BHEL	QP NO.	QA/CF/QP/312	REV	02	DESCRIPTION	LEGENDS	
	SPEC. NO.	AS PER P.O.	REV.	AS PER PO	FINISH MACHINED NODULAR CASTINGS	P- PERFORMED BY	1- BHEL REP
	DRG. NO.	AS PER PO	REV.			W- WITNESSED BY	2- VENDOR
						V- VERIFIED BY	3- SUBVENDOR

SL. NO.	COMPONENT OPERATION	CHARACTERISTICS	CLASSIFI-CATION	TYPE OF CHECK	QUANTUM	REFERENCE DOCUMENT	ACCEPTANCE NORMS	FORMAT OF RECORDS	AGENCY			REMARKS
									P	W	V	
1.	MELTING	CHEMISTRY	MAJOR	CHEMICAL TEST	EACH HEAT	BHEL SPEC	BHEL SPEC	TC	2		1	
2.	FERRITIZING & ANNEALING	TEMP. & TIME	MAJOR	HT RECORD	EACH BATCH	MANUFACTURE PRACTICE		TIME TEMP RECORDS, GRAPH	2		1	
3.	MARKING	IDENTIFICATION OF CASTING & KEEL BLOCK	MAJOR	VISUAL	100%	BHEL SPEC	BHEL SPEC		2	1 *		PHOTO/ SKETCH OF TEST-coupon TO BE MADE PART OF TCs
4.	ROUGH MACHINING	DIMENSION	MAJOR	DIMENSIONAL	100%	DRAWING	DRAWING	DIMENSION RECORD	2	1		
5.	MECHANICAL TESTING	MECHANICAL PROPERTIES	MAJOR	TENSILE, IMPACT, MICRO STRUCTURE HARDNESS	AS PER SPEC 100%	BHEL SPEC	BHEL SPEC	TC	2	1		
6.	FINAL NDT	NDT	MAJOR	UT & MPI	100%	SPEC & BHEL APPROVED NDE PLAN	BHEL SPEC	TC	2	1		
7.	LEAK TEST (IF CALLED FOR IN DRAWING)	LEAK PROOFNESS	MAJOR	KEROSENE TEST	100%	DRAWING	DRAWING	TC	2		1	
8.	IDENTIFICATION, PACKING & FORWARDING TO M/C SHOP	CHECKING & RETRACE OF DOCUMENTS	CRITICAL	CHECKING	100%	PO, SPEC, DRG, & QP	PO, SPEC, DRG, & QP	SL NO 1 TO 7 CERTIFICATES	2		.	
9.	FINAL M/CING	DIMENSION	MAJOR	DIMENSIONAL	100%	DRAWING LOGSHEET	DRAWING LOGSHEET	DIMENSION RECORD + LOGSHEET	2 / 3	1		AT BHEL ~~APPROVED~~ AGREED SUB VENDOR

* WITNESSING NOT REQUIRED IN CASE OF SEPERATELY POURED KEEL BLOCK (IF PERMITTED BY ORDERING SPECIFICATION)

ANNEXURE-5

QUALITY PLAN

BHEL							
	QP NO.	QA/CF/QP/312	REV	02	DESCRIPTION	LEGENDS	
	SPEC. NO.	AS PER P.O.	REV.	AS PER PO	FINISH MACHINED NODULAR CASTINGS	P- PERFORMED BY	1- BHEL REP
	DRG. NO.	AS PER PO	REV.			W- WITNESSED BY	2- VENDOR
						V- VERIFIED BY	3- SUBVENDOR

SL. NO.	COMPONENT OPERATION	CHARACTERISTICS	CLASSIFI-CATION	TYPE OF CHECK	QUANTUM	REFERENCE DOCUMENT	ACCEPTANCE NORMS	FORMAT OF RECORDS	AGENCY			REMARKS
									P	W	V	
10.	PRESSURE TEST (IF CALLED FOR IN DRAWING / TDC / PO)	PRESSURE TIGHT	MAJOR	HYDRAULIC TESTING	100%	DRAWING / TDC	DRAWING	TC	2	1		AT BHEL APPROVED SUB VENDOR
11.	IDENTIFICATION, PACKING & DESPATCH CLEARANCE	CHECKING & RETRACE OF DOCUMENTS	CRITICAL	CHECKING	100%	PO, SPEC, DRG, & QP	PO, SPEC, DRG, & QP	CLEARANCE CERTIFICATE ALONG WITH ALL TC	2		1	

NOTE:
1. Repair by welding not allowed.
2. Keel blocks will accompany castings during all HT processes.
3. Only qualified NDT operators will be employed.

Sagarwal 27/7/12
SUGANDH AGARWAL
QA, BHEL

2/3

QUALITY PLAN													PAGE 1 OF 1
BHEL	QP NO.	QA/CF/QP/311	REV	02	DESCRIPTION				LEGENDS				
	SPEC. NO.	AS PER P.O.	REV.	AS PER PO	NODULAR CASTINGS				P- PERFORMED BY			1- BHEL REP	
	DRG. NO.	AS PER PO	REV.						W- WITNESSED BY			2- VENDOR	
									V- VERIFIED BY			3- SUBVENDOR	
SL. NO.	**COMPONENT OPERATION**	**CHARACTERISTICS**	**CLASSIFICATION**	**TYPE OF CHECK**	**QUANTUM**	**REFERENCE DOCUMENT**	**ACCEPTANCE NORMS**		**FORMAT OF RECORDS**	**AGENCY**			**REMARKS**
										P	W	V	
1.	MELTING	CHEMISTRY	MAJOR	CHEMICAL TEST	EACH HEAT	BHEL SPEC	BHEL SPEC		TC	2		1	
2.	FERRITIZING & ANNEALING	TEMP. & TIME	MAJOR	HT RECORD	EACH BATCH	MANUFACTURE PRACTICE			TIME TEMP RECORDS, GRAPH	2		1	
3.	MARKING	IDENTIFICATION OF CASTING & KEEL BLOCK	MAJOR	VISUAL	100%	BHEL SPEC	BHEL SPEC			2	1 *		PHOTO/ SKETCH OF TEST-coupon TO BE MADE PART OF TCs
4.	ROUGH MACHINING	DIMENSION	MAJOR	DIMENSIONAL	100%	DRAWING	DRAWING		DIMENSION RECORD	2	1		
5.	MECHANICAL TESTING	MECHANICAL PROPERTIES	MAJOR	TENSILE, IMPACT, MICRO STRUCTURE, HARDNESS	AS PER SPEC 100%	BHEL SPEC	BHEL SPEC		TC	2	1		
6.	FINAL NDT	NDT	MAJOR	UT & MPI	100%	SPEC & BHEL APPROVED NDE PLAN	BHEL SPEC		TC	2	1		
7.	LEAK TEST (IF CALLED FOR IN DRAWING)	LEAK PROOFNESS	MAJOR	KEROSENE TEST	100%	DRAWING	DRAWING		TC	2		1	
8.	IDENTIFICATION, PACKING & FORWARDING TO M/C SHOP	CHECKING & RETRACE OF DOCUMENTS	CRITICAL	CHECKING	100%	PO, SPEC, DRG, & QP	PO, SPEC, DRG, & QP		SL NO 1 TO 7 CERTIFICATES	2			

*** WITNESSING NOT REQUIRED IN CASE OF SEPERATELY POURED KEEL BLOCK (IF PERMITTED BY ORDERING SPECIFICATION)**

NOTES:

1. Weldings are only allowed after approval from BHEL in written form (refer clause for 'Rectification Welding' in specification). .
2. Keel blocks will accompany castings during all HT processes.
3. Only qualified NDT operators will be employed

Agarwal 27/7/17
Sugandh Agarwal
QA

151

~~Annexure - I~~

Certificate by Chartered Accountant on letter head

This is to Certify that M/S ....., (hereinafter referred to as 'company') having its registered office at ..... is registered under MSMED Act 2006, (Entrepreneur Memorandum No (Part--II) ..... dtd:....., Category: ..... (Micro/Small)). (Copy enclosed).

Further verified from the Books of Accounts that the investment of the company as on date..... as per MSMED Act 2006 is as follows:

1. **For Manufacturing Enterprises:** Investment in plant and machinery (i.e. original cost excluding land and building and the items specified by the Ministry of Small Scale Industries vide its notification No.S.O.1722(E) dated October 5, 2006 :
   Rs.....Lacs
2. **For Service Enterprises:** Investment in equipment (original cost excluding land and building and furniture, fittings and other items not directly related to the service rendered or as may be notified under the MSMED Act, 2006:
   Rs.....Lacs

The above investment of Rs.....Lacs is within permissible limit of Rs.....Lacs for .....Micro / Small **(Strike off which is not applicable)** Category under MSMED Act 2006.

Date:

(Signature)

Name -

Membership number -

Seal of Chartered Accountant

ANNEXURE-7

No. P-45021/2/2017-B.E.-II
Government of India
Ministry of Commerce and Industry
Department of Industrial Policy and Promotion
****

Dated 15th June, 2017
Udyog Bhawan, New Delhi

To

All Central Ministries/Departments/CPSUs/All concerned

ORDER

Subject: Public Procurement (Preference to Make in India), Order 2017

Whereas it is the policy of the Government of India to encourage 'Make in India' and promote manufacturing and production of goods and services in India with a view to enhancing income and employment, and

Whereas procurement by the Government is substantial in amount and can contribute towards this policy objective, and

Whereas local content can be increased through partnerships, cooperation with local companies, establishing production units in India or Joint Ventures (JV) with Indian suppliers, increasing the participation of local employees in services and training them,

Now therefore the following Order is issued :

1. This Order is issued pursuant to Rule 153 (iii) of the General Financial Rules 2017.
2. **Definitions**: For the purposes of this Order:

'Local content' means the amount of value added in India which shall, unless otherwise prescribed by the Nodal Ministry, be the total value of the item procured (excluding net domestic indirect taxes) minus the value of imported content in the item (including all customs duties) as a proportion of the total value, in percent.

'Local supplier' means a supplier or service provider whose product or service offered for procurement meets the minimum local content as prescribed under this Order or by the competent Ministries / Departments in pursuance of this order.

'L1' means the lowest tender or lowest bid or the lowest quotation received in a tender, bidding process or other procurement solicitation as adjudged in the evaluation process as per the tender or other procurement solicitation.

'margin of purchase preference' means the maximum extent to which the price quoted by a local supplier may be above the L1 for the purpose of purchase preference.

'Nodal Ministry' means the Ministry or Department identified pursuant to this order in respect of a particular item of goods or services.

.....Contd. p.2/-

'Procuring entity' means a Ministry or department or attached or subordinate office of, or autonomous body controlled by, the Government of India and includes Government companies as defined in the Companies Act.

3. **Requirement of Purchase Preference**: Subject to the provisions of this Order and to any specific instructions issued by the Nodal Ministry or in pursuance of this Order, purchase preference shall be given to local suppliers in all procurements undertaken by procuring entities in the manner specified hereunder:

a. In procurement of goods in respect of which the Nodal Ministry has communicated that there is sufficient local capacity and local competition, and where the estimated value of procurement is Rs. 50 lakhs or less, only local suppliers shall be eligible. If the estimated value of procurement of such goods is more than Rs. 50 lakhs, the provisions of sub-paragraph b or c, as the case may be, shall apply.

b. In the procurements of goods which are not covered by paragraph 3a and which are divisible in nature, the following procedure shall be followed:

i. Among all qualified bids, the lowest bid will be termed as L1. If L1 is from a local supplier, the contract for full quantity will be awarded to L1.

ii. If L1 bid is not from a local supplier, 50% of the order quantity shall be awarded to L1. Thereafter, the lowest bidder among the local suppliers, will be invited to match the L1 price for the remaining 50% quantity subject to the local supplier's quoted price falling within the margin of purchase preference, and contract for that quantity shall be awarded to such local supplier subject to matching the L1 price. In case such lowest eligible local supplier fails to match the L1 price or accepts less than the offered quantity, the next higher local supplier within the margin of purchase preference shall be invited to match the L1 price for remaining quantity and so on, and contract shall be awarded accordingly. In case some quantity is still left uncovered on local suppliers, then such balance quantity may also be ordered on the L1 bidder.

c. In procurements of goods not covered by sub-paragraph 3a and which are not divisible, and in procurement of services where the bid is evaluated on price alone, the following procedure shall be followed:

i. Among all qualified bids, the lowest bid will be termed as L1. If L1 is from a local supplier, the contract will be awarded to L1.

ii. If L1 is not from a local supplier, the lowest bidder among the local suppliers, will be invited to match the L1 price subject to local supplier's quoted price falling within the margin of purchase preference, and the contract shall be awarded to such local supplier subject to matching the L1 price.

iii. In case such lowest eligible local supplier fails to match the L1 price, the local supplier with the next higher bid within the margin of purchase preference shall be invited to match the L1 price and so on and contract shall be awarded accordingly. In case none of the local suppliers within the margin of purchase preference matches the L1 price, then the contract may be awarded to the L1 bidder.

.....Contd. p.3/-

4. **Exemption of small purchases**: Notwithstanding anything contained in paragraph 3, procurements where the estimated value to be procured is less than Rs. 5 lakhs shall be exempt from this Order. However, it shall be ensured by procuring entities that procurement is not split for the purpose of avoiding the provisions of this Order.

5. **Minimum local content**: The minimum local content shall ordinarily be 50%. The Nodal Ministry may prescribe a higher or lower percentage in respect of any particular item and may also prescribe the manner of calculation of local content.

6. **Margin of Purchase Preference**: The margin of purchase preference shall be 20% .

7. **Requirement for specification in advance**: The minimum local content, the margin of purchase preference and the procedure for preference to Make in India shall be specified in the notice inviting tenders or other form of procurement solicitation and shall not be varied during a particular procurement transaction.

8. **Government E-marketplace**: In respect of procurement through the Government E-marketplace (GeM) shall, as far as possible, specifically mark the items which meet the minimum local content while registering the item for display, and shall, wherever feasible, make provision for automated comparison with purchase preference and without purchase preference and for obtaining consent of the local supplier in those cases where purchase preference is to be exercised.

9. **Verification of local content**:

   a. The local supplier at the time of tender, bidding or solicitation shall be required to provide self-certification that the item offered meets the minimum local content and shall give details of the location(s) at which the local value addition is made.

   b. In cases of procurement for a value in excess of Rs. 10 crores, the local supplier shall be required to provide a certificate from the statutory auditor or cost auditor of the company (in the case of companies) or from a practicing cost accountant or practicing chartered accountant (in respect of suppliers other than companies) giving the percentage of local content.

   c. Decisions on complaints relating to implementation of this Order shall be taken by the competent authority which is empowered to look into procurement-related complaints relating to the procuring entity.

   d. Nodal Ministries may constitute committees with internal and external experts for independent verification of self-declarations and auditor's/ accountant's certificates on random basis and in the case of complaints.

   e. Nodal Ministries and procuring entities may prescribe fees for such complaints.

   f. False declarations will be in breach of the Code of Integrity under Rule 175(1)(i)(h) of the General Financial Rules for which a bidder or its successors can be debarred for up to two years as per Rule 151 (iii) of the General Financial Rules along with such other actions as may be permissible under law.

   g. A supplier who has been debarred by any procuring entity for violation of this Order shall not be eligible for preference under this Order for procurement by any other procuring entity for the

.....Contd.p.4/-

duration of the debarment. The debarment for such other procuring entities shall take effect prospectively from the date on which it comes to the notice of other procurement entities, in the manner prescribed under paragraph 9h below.

h. The Department of Expenditure shall issue suitable instructions for the effective and smooth operation of this process, so that:

i. The fact and duration of debarment for violation of this Order by any procuring entity are promptly brought to the notice of the Member-Convenor of the Standing Committee and the Department of Expenditure through the concerned Ministry /Department or in some other manner;

ii. on a periodical basis such cases are consolidated and a centralized list or decentralized lists of such suppliers with the period of debarment is maintained and displayed on website(s);

iii. in respect of procuring entities other than the one which has carried out the debarment, the debarment takes effect prospectively from the date of uploading on the website(s) in the such a manner that ongoing procurements are not disrupted.

10. **Specifications in Tenders and other procurement solicitations**:

a. Every procuring entity shall ensure that the eligibility conditions in respect of previous experience fixed in any tender or solicitation do not require proof of supply in other countries or proof of exports.

b. Procuring entities shall endeavour to see that eligibility conditions, including on matters like turnover, production capability and financial strength do not result in unreasonable exclusion of local suppliers who would otherwise be eligible, beyond what is essential for ensuring quality or creditworthiness of the supplier.

c. Procuring entities shall, within 2 months of the issue of this Order review all existing eligibility norms and conditions with reference to sub-paragraphs 'a' and 'b' above.

d. If a Nodal Ministry is satisfied that Indian suppliers of an item are not allowed to participate and/ or compete in procurement by any foreign government, it may, if it deems appropriate, restrict or exclude bidders from that country from eligibility for procurement of that item and/ or other items relating to that Nodal Ministry. A copy of every instruction or decision taken in this regard shall be sent to the Chairman of the Standing Committee.

e. For the purpose of sub-paragraph 10 d above, a supplier or bidder shall be considered to be from a country if (i) the entity is incorporated in that country, or ii) a majority of its shareholding or effective control of the entity is exercised from that country; or (iii) more that 50% of the value of the item being supplied has been added in that country. Indian suppliers shall mean those entities which meet any of these tests with respect to India."

.....Contd.p.5/-

11. **Assessment of supply base by Nodal Ministries**: The Nodal Ministry shall keep in view the domestic manufacturing / supply base and assess the available capacity and the extent of local competition while identifying items and prescribing minimum local content or the manner of its calculation, with a view to avoiding cost increase from the operation of this Order.

12. **Increase in minimum local content**: The Nodal Ministry may annually review the local content requirements with a view to increasing them, subject to availability of sufficient local competition with adequate quality.

13. **Manufacture under license/ technology collaboration agreements with phased indigenization**: While notifying the minimum local content, Nodal Ministries may make special provisions for exempting suppliers from meeting the stipulated local content if the product is being manufactured in India under a license from a foreign manufacturer who holds intellectual property rights and where there is a technology collaboration agreement / transfer of technology agreement for indigenous manufacture of a product developed abroad with clear phasing of increase in local content.

14. **Powers to grant exemption and to reduce minimum local content**: Ministries /Departments of Government of India and the Boards of Directors of Government companies or autonomous bodies may, by written order,

    a. reduce the minimum local content below the prescribed level;

    b. reduce the margin of purchase preference below 20% ;

    c. exempt any particular item or procuring or supplying entities or class or classes of items or procuring or supplying entities from the operation of this Order or any part of the Order.

    A copy of every such order shall be marked to the Member-Convenor of the Standing Committee constituted under this Order.

15. **Directions to Government companies**: In respect of Government companies and other procuring entities not governed by the General Financial Rules, the administrative Ministry or Department shall issue policy directions requiring compliance with this Order.

16. **Standing Committee**: A standing committee is hereby constituted with the following membership:

    Secretary, Department of Industrial Policy and Promotion—Chairman
    Secretary, Commerce—Member
    Secretary, Ministry of Electronics and Information Technology—Member
    Joint Secretary (Public Procurement), Department of Expenditure—Member
    Joint Secretary (DIPP)—Member-Convenor

    The Secretary of the Department concerned with a particular item shall be a member in respect of issues relating to such item. The Chairman of the Committee may co-opt technical experts as relevant to any issue or class of issues under its consideration.

.....Contd.p.6/-

17. **Functions of the Standing Committee**: The Standing Committee shall meet as often as necessary but not less than once in six months. The Committee

    a. shall oversee the implementation of this order and issues arising therefrom, and make recommendations to Nodal Ministries and procuring entities.

    b. shall annually assess and periodically monitor compliance with this Order

    c. shall identify Nodal Ministries and the allocation of items among them for issue of notifications on minimum local content

    d. may require furnishing of details or returns regarding compliance with this Order and related matters

    e. may, during the annual review or otherwise, assess issues, if any, where it is felt that the manner of implementation of the order results in any restrictive practices, cartelization or increase in public expenditure and suggest remedial measures

    f. may examine cases covered by paragraph 13 above relating to manufacture under license/ technology transfer agreements with a view to satisfying itself that adequate mechanisms exist for enforcement of such agreements and for attaining the underlying objective of progressive indigenization

    g. may consider any other issue relating to this Order which may arise.

18. **Removal of difficulties**: Ministries /Departments and the Boards of Directors of Government companies may issue such clarifications and instructions as may be necessary for the removal of any difficulties arising in the implementation of this Order.

19. **Ministries having existing policies**: Where any Ministry or Department has its own policy for preference to local content approved by the Cabinet after 1st January 2015, such policies will prevail over the provisions of this Order. All other existing orders on preference to local content shall be reviewed by the Nodal Ministries and revised as needed to conform to this Order, within two months of the issue of this Order.

20. **Transitional provision**: This Order shall not apply to any tender or procurement for which notice inviting tender or other form of procurement solicitation has been issued before the issue of this Order.

(B. S. Nayak)
Under Secretary to Government of India
Ph. 23061257

No. P-45021/2/2017-PP (BE-II)
Government of India
Ministry of Commerce and Industry
Department of Industrial Policy and Promotion
(Public Procurement Section)
****

Dated 28th May, 2018
Udyog Bhawan, New Delhi

To
All Central Ministries/Departments/CPSUs/All concerned

ORDER

Subject: Public Procurement (Preference to Make in India), Order 2017 – Revision; regarding.

Department of Industrial Policy and Promotion, in partial modification of Order No.P-45021/2/2017-B.E.-II dated 15.6.2017, hereby issues the revised 'Public Procurement (Preference to Make in India), Order 2017" with immediate effect:-

Whereas it is the policy of the Government of India to encourage 'Make in India' and promote manufacturing and production of goods and services in India with a view to enhancing income and employment, and

Whereas procurement by the Government is substantial in amount and can contribute towards this policy objective, and

Whereas local content can be increased through partnerships, cooperation with local companies, establishing production units in India or Joint Ventures (JV) with Indian suppliers, increasing the participation of local employees in services and training them,

Now therefore the following Order is issued :

1. This Order is issued pursuant to Rule 153 (iii) of the General Financial Rules 2017.
2. **Definitions**: For the purposes of this Order:

   'Local content' means the amount of value added in India which shall, unless otherwise prescribed by the Nodal Ministry, be the total value of the item procured (excluding net domestic indirect taxes) minus the value of imported content in the item (including all customs duties) as a proportion of the total value, in percent.

   'Local supplier' means a supplier or service provider whose product or service offered for procurement meets the minimum local content as prescribed under this Order or by the competent Ministries / Departments in pursuance of this order.

   'L1' means the lowest tender or lowest bid or the lowest quotation received in a tender, bidding process or other procurement solicitation as adjudged in the evaluation process as per the tender or other procurement solicitation.

   'margin of purchase preference' means the maximum extent to which the price quoted by a local supplier may be above the L1 for the purpose of purchase preference.

.....Contd. p/2

'Nodal Ministry' means the Ministry or Department identified pursuant to this order in respect of a particular item of goods or services or works.

'Procuring entity' means a Ministry or department or attached or subordinate office of, or autonomous body controlled by, the Government of India and includes Government companies as defined in the Companies Act.

'Works' means all works as per Rule 130 of GFR- 2017, and will also include *'turnkey works'*.

3. **Requirement of Purchase Preference :** Subject to the provisions of this Order and to any specific instructions issued by the Nodal Ministry or in pursuance of this Order, purchase preference shall be given to local suppliers in all procurements undertaken by procuring entities in the manner specified hereunder"

   a. "In procurement of goods, services or works in respect of which the Nodal Ministry has communicated that there is sufficient local capacity and local competition, and where the estimated value of procurement is Rs. 50 lakhs or less, only local suppliers shall be eligible. If the estimated value of procurement of such goods or services or works is more than Rs. 50 lakhs, the provisions of sub-paragraph b or c, as the case may be, shall apply";

   b. "In the procurements of goods or works which are not covered by paragraph 3a and which are divisible in nature, the following procedure shall be followed";

      i. Among all qualified bids, the lowest bid will be termed as L1. If L1 is from a local supplier, the contract for full quantity will be awarded to L1.

      ii. If L1 bid is not from a local supplier, 50% of the order quantity shall be awarded to L1. Thereafter, the lowest bidder among the local suppliers, will be invited to match the L1 price for the remaining 50% quantity subject to the local supplier's quoted price falling within the margin of purchase preference, and contract for that quantity shall be awarded to such local supplier subject to matching the L1 price. In case such lowest eligible local supplier fails to match the L1 price or accepts less than the offered quantity, the next higher local supplier within the margin of purchase preference shall be invited to match the L1 price for remaining quantity and so on, and contract shall be awarded accordingly. In case some quantity is still left uncovered on local suppliers, then such balance quantity may also be ordered on the L1 bidder.

   c. "In procurements of goods or works not covered by sub-paragraph 3a and which are not divisible, and in procurement of services where the bid is evaluated on price alone, the following procedure shall be followed":-

      i. Among all qualified bids, the lowest bid will be termed as L1. If L1 is from a local supplier, the contract will be awarded to L1.

.....Contd. p/3

ii. If L1 is not from a local supplier, the lowest bidder among the local suppliers, will be invited to match the L1 price subject to local supplier's quoted price falling within the margin of purchase preference, and the contract shall be awarded to such local supplier subject to matching the L1 price.

iii. In case such lowest eligible local supplier fails to match the L1 price, the local supplier with the next higher bid within the margin of purchase preference shall be invited to match the L1 price and so on and contract shall be awarded accordingly. In case none of the local suppliers within the margin of purchase preference matches the L1 price, then the contract may be awarded to the L1 bidder.

4. **Exemption of small purchases**: Notwithstanding anything contained in paragraph 3, procurements where the estimated value to be procured is less than Rs. 5 lakhs shall be exempt from this Order. However, it shall be ensured by procuring entities that procurement is not split for the purpose of avoiding the provisions of this Order.

5. **Minimum local content**: The minimum local content shall ordinarily be 50%. The Nodal Ministry may prescribe a higher or lower percentage in respect of any particular item and may also prescribe the manner of calculation of local content.

6. **Margin of Purchase Preference**: The margin of purchase preference shall be 20% .

7. **Requirement for specification in advance**: The minimum local content, the margin of purchase preference and the procedure for preference to Make in India shall be specified in the notice inviting tenders or other form of procurement solicitation and shall not be varied during a particular procurement transaction.

8. **Government E-marketplace**: In respect of procurement through the Government E-marketplace (GeM) shall, as far as possible, specifically mark the items which meet the minimum local content while registering the item for display, and shall, wherever feasible, make provision for automated comparison with purchase preference and without purchase preference and for obtaining consent of the local supplier in those cases where purchase preference is to be exercised.

9. **Verification of local content**:

   a. The local supplier at the time of tender, bidding or solicitation shall be required to provide self-certification that the item offered meets the minimum local content and shall give details of the location(s) at which the local value addition is made.

   b. In cases of procurement for a value in excess of Rs. 10 crores, the local supplier shall be required to provide a certificate from the statutory auditor or cost auditor of the company (in the case of companies) or from a practicing cost accountant or practicing chartered accountant (in respect of suppliers other than companies) giving the percentage of local content.

   c. Decisions on complaints relating to implementation of this Order shall be taken by the competent authority which is empowered to look into procurement-related complaints relating to the procuring entity.

.....Contd. p/4

d. Nodal Ministries may constitute committees with internal and external experts for independent verification of self-declarations and auditor's/ accountant's certificates on random basis and in the case of complaints.

e. Nodal Ministries and procuring entities may prescribe fees for such complaints.

f. False declarations will be in breach of the Code of Integrity under Rule 175(1)(i)(h) of the General Financial Rules for which a bidder or its successors can be debarred for up to two years as per Rule 151 (iii) of the General Financial Rules along with such other actions as may be permissible under law.

g. A supplier who has been debarred by any procuring entity for violation of this Order shall not be eligible for preference under this Order for procurement by any other procuring entity for the duration of the debarment. The debarment for such other procuring entities shall take effect prospectively from the date on which it comes to the notice of other procurement entities, in the manner prescribed under paragraph 9h below.

h. The Department of Expenditure shall issue suitable instructions for the effective and smooth operation of this process, so that:

   i. The fact and duration of debarment for violation of this Order by any procuring entity are promptly brought to the notice of the Member-Convenor of the Standing Committee and the Department of Expenditure through the concerned Ministry /Department or in some other manner;

   ii. on a periodical basis such cases are consolidated and a centralized list or decentralized lists of such suppliers with the period of debarment is maintained and displayed on website(s);

   iii. in respect of procuring entities other than the one which has carried out the debarment, the debarment takes effect prospectively from the date of uploading on the website(s) in the such a manner that ongoing procurements are not disrupted.

10. **Specifications in Tenders and other procurement solicitations:**

a. Every procuring entity shall ensure that the eligibility conditions in respect of previous experience fixed in any tender or solicitation do not require proof of supply in other countries or proof of exports.

b. Procuring entities shall endeavour to see that eligibility conditions, including on matters like turnover, production capability and financial strength do not result in unreasonable exclusion of local suppliers who would otherwise be eligible, beyond what is essential for ensuring quality or creditworthiness of the supplier.

c. Procuring entities shall, within 2 months of the issue of this Order review all existing eligibility norms and conditions with reference to sub-paragraphs 'a' and 'b' above.

d. If a Nodal Ministry is satisfied that Indian suppliers of an item are not allowed to participate and/ or compete in procurement by any foreign government, it may, if it deems appropriate, restrict or exclude bidders from that country from eligibility for procurement of that item and/ or other items relating to that Nodal Ministry. A copy of every instruction or decision taken in this regard shall be sent to the Chairman of the Standing Committee.

.....Contd. p/5

e. For the purpose of sub-paragraph 10 d above, a supplier or bidder shall be considered to be from a country if (i) the entity is incorporated in that country, or ii) a majority of its shareholding or effective control of the entity is exercised from that country; or (iii) more that 50% of the value of the item being supplied has been added in that country. Indian suppliers shall mean those entities which meet any of these tests with respect to India."

11. **Assessment of supply base by Nodal Ministries**: The Nodal Ministry shall keep in view the domestic manufacturing / supply base and assess the available capacity and the extent of local competition while identifying items and prescribing minimum local content or the manner of its calculation, with a view to avoiding cost increase from the operation of this Order.

12. **Increase in minimum local content**: The Nodal Ministry may annually review the local content requirements with a view to increasing them, subject to availability of sufficient local competition with adequate quality.

13. **Manufacture under license/ technology collaboration agreements with phased indigenization**: While notifying the minimum local content, Nodal Ministries may make special provisions for exempting suppliers from meeting the stipulated local content if the product is being manufactured in India under a license from a foreign manufacturer who holds intellectual property rights and where there is a technology collaboration agreement / transfer of technology agreement for indigenous manufacture of a product developed abroad with clear phasing of increase in local content.

14. **Powers to grant exemption and to reduce minimum local content**: Ministries /Departments of Government of India and the Boards of Directors of Government companies or autonomous bodies may, by written order,

    a. reduce the minimum local content below the prescribed level;

    b. reduce the margin of purchase preference below 20% ;

    c. exempt any particular item or procuring or supplying entities or class or classes of items or procuring or supplying entities from the operation of this Order or any part of the Order.

    A copy of every such order shall be marked to the Member-Convenor of the Standing Committee constituted under this Order.

15. **Directions to Government companies**: In respect of Government companies and other procuring entities not governed by the General Financial Rules, the administrative Ministry or Department shall issue policy directions requiring compliance with this Order.

16. **Standing Committee**: A standing committee is hereby constituted with the following membership:

    Secretary, Department of Industrial Policy and Promotion—Chairman
    Secretary, Commerce—Member
    Secretary, Ministry of Electronics and Information Technology—Member
    Joint Secretary (Public Procurement), Department of Expenditure—Member
    Joint Secretary (DIPP)—Member-Convenor

.....Contd. p/6

The Secretary of the Department concerned with a particular item shall be a member in respect of issues relating to such item. The Chairman of the Committee may co-opt technical experts as relevant to any issue or class of issues under its consideration.

17. **Functions of the Standing Committee**: The Standing Committee shall meet as often as necessary but not less than once in six months. The Committee

    a. shall oversee the implementation of this order and issues arising therefrom, and make recommendations to Nodal Ministries and procuring entities.

    b. shall annually assess and periodically monitor compliance with this Order

    c. shall identify Nodal Ministries and the allocation of items among them for issue of notifications on minimum local content

    d. may require furnishing of details or returns regarding compliance with this Order and related matters

    e. may, during the annual review or otherwise, assess issues, if any, where it is felt that the manner of implementation of the order results in any restrictive practices, cartelization or increase in public expenditure and suggest remedial measures

    f. may examine cases covered by paragraph 13 above relating to manufacture under license/ technology transfer agreements with a view to satisfying itself that adequate mechanisms exist for enforcement of such agreements and for attaining the underlying objective of progressive indigenization

    g. may consider any other issue relating to this Order which may arise.

18. **Removal of difficulties**: Ministries /Departments and the Boards of Directors of Government companies may issue such clarifications and instructions as may be necessary for the removal of any difficulties arising in the implementation of this Order.

19. **Ministries having existing policies**: Where any Ministry or Department has its own policy for preference to local content approved by the Cabinet after 1st January 2015, such policies will prevail over the provisions of this Order. All other existing orders on preference to local content shall be reviewed by the Nodal Ministries and revised as needed to conform to this Order, within two months of the issue of this Order.

20. **Transitional provision**: This Order shall not apply to any tender or procurement for which notice inviting tender or other form of procurement solicitation has been issued before the issue of this Order.

(B. S. Nayak)
Under Secretary to Government of India
Ph. 23061257

BHARAT HEAVY ELECTRICALS LIMITED

HEEP-HARIDWAR, UTTARAKHAND (249403)

General Instructions and Standard Terms & Conditions for bidding against Tender Enquiry (GISTC)

For Foreign Bidders (Version April-2019,Rev: 04)

Table of Contents

1. GENERAL 1
2. ORIGIN OF QUOTATION 1
3. SUBMISSION OF TENDER 1
4. TENDER OPENING 2
5. SPECIFICATION, DRAWINGS & STANDARD 3
6. PRICE SCHEDULE 3
7. REVERSE AUCTION 4
8. DELIVERY TERMS 4
9. PENALTY FOR LATE DELIVERY 5
10. PAYMENT TERMS 6
11. BANK GUARANTEE 7
12. GUARANTEE / WARRANTY AND CORRESPONDING REPAIRS / REPLACEMENT OF GOODS 7
13. QUALITY REQUIREMENT 7
14. VALIDITY 7
15. RIGHT OF ACCEPTANCE 7
16. TRANSIT INSURANCE 8
17. PHYTOSANITARY CERTIFICATE 8
18. RISK PURCHASE 8
19. FORCE MAJEURE CLAUSE 8
20. NON-DISCLOSURE AGREEMENT 9
21. SETTLEMENT OF DISPUTES/ARBITRATION 9
22. INFORMATION TO THE BIDDERS 10
23. MAKE IN INDIA (GOVT-NOTIFICATION) 10
24. NOTE 11

1. GENERAL.

These general terms & conditions shall apply to all the Tender Enquiries, notice inviting tenders, request for quotations concerning the supply of goods and / or rendering of services to Bharat Heavy Electricals Ltd., HEEP, Haridwar (hereinafter referred to as BHEL or the Purchaser). In case of placement of order these conditions will become part of purchase order until unless the deviations are specifically agreed by BHEL.

2. ORIGIN OF QUOTATION.

a) The quotation should preferably be from the principal bidder. However tender specific authorized registered dealer / agent can also submit the bid on their behalf, failing which the quotation is liable to be ignored. BHEL prefers to deal directly with the principal manufacturers.

b) An agent cannot quote on behalf of more than one principal in the same Tender Enquiry.

3. SUBMISSION OF TENDER.

a) Bid/Quotation must be enclosed in sealed cover on which tender enquiry number and the due date MUST BE written and be invariably sent under REGISTERED POST / SPEED POST / COURIER/Dropped in the Tender Box: addressed as follows: -

Quotation Against Enquiry No._____ Dated: _____
Due on: _____

To,
THE HEAD OF MATERIALS MANAGEMENT,
Heavy Electrical Equipment Plant,
Bharat Heavy Electricals Limited,
HARIDWAR-249403 (Uttarakhand), INDIA.

b) TENDER BOX is located at TENDER ROOM, Room No. - 415, 4th Floor, Main Admin. Building, BHEL-HEEP, Haridwar.

Quotations / Bids not in accordance with General Instructions and Standard Terms & Conditions are likely to be ignored.

c) In case of Three / Two Part Bid, technical bid containing technical offer, duly signed; and un-priced copy of the Price Bid should be kept in one envelope. Price Bid containing only the price should be kept in a separate envelope. All envelopes indicating Part-1 or Part-2 or Part-3 as the case may be to be put in a bigger envelope. Please note that un-priced bid should be the exact replica of price bid but without prices.

d) The bid / quotation must be posted before due date, keeping allowance for postal transit time. Quotations sent by any mode but not received in time will be ignored. Tender received through authorized E-mail is also acceptable. However, in time submission of tender in tender box shall be the responsibility of the bidder, sent through any mode. Documents submitted with the offer / bid shall be signed and stamped in each page by authorized representative of the bidder.

e) Any additional documents submitted by supplier / bidder, during processing of registration application / tender or after placement of order shall not be accepted unless it is submitted with forwarding letter and duly signed and stamped.

e) The bids of the bidders who are on the banned list and also the bids of the bidders, who engage the services of the banned firms, shall be rejected. The cutting / overwriting in the bid / offer must be duly attested by the signatories to the bid. The list of firms banned by BHEL is available on BHEL web site www.bhel.com.

f) Being PMD vendor, if you are not quoting against this tender enquiry, please send your regret letter positively for our reference with valid reasons for not participating in the tender enquiry. Repeated lack of response on the part of bidder may lead to deletion of such PMD vendor from BHEL's approved vendor list.

g) The bidders will submit Integrity Pact, duly signed by its authorized signatory, along with their bids wherever estimated tender value is Rs. 5 Crore or more.

h) In case of open tender, the unregistered bidder shall submit inter alia duly filled-in Supplier Registration Form (SRF) along with the bid. Bidders can download the SRF from www.bhel.com

i) BHEL reserves the right to award tendered quantities among more than one bidder (after acceptance of L1 price by the other bidders). BHEL can also consider awarding of part of the tendered quantity to other than L-1 bidder at **L1 counter offered rates**, if the quantity offered by the L-1 bidder is less than the quantity tendered for.

j) BHEL may also reduce the Tender Quantity for offering it to Micro & Small Enterprise (MSE) Indian Vendors as per applicable Government of India rules whose prices are within 15% of L1 prices as per directives of Government of India.

k) In case of e-Tendering (Online bidding through e portal), offline bid submitted in hard copy or in any other form by the vendor / supplier will not be accepted and will be rejected out rightly. Only e-portal bid will be accepted.

4. TENDER OPENING.

Tender opening is scheduled to start in the Tender Room at 2:00 PM, on the due date. Therefore, bid / quotations must reach this office / tender Box latest by 1:45 PM on due date. Only participating bidders are allowed to attend tender opening. **TENDERS RECEIVED AFTER THE SPECIFIED TIME OF THEIR 'SUBMISSION' WILL BE TREATED AS LATE TENDERS AND SHALL NOT BE CONSIDERED UNDER ANY CIRCUMSTANCES.** The bidders or their authorized representatives may be allowed to attend tender opening if duly authorized by their principals, through a tender specific letter on that particular day. General authorization letter is not acceptable.

Note: - Foreign bidders willing to attend the bid opening has to provide the requisite documents to the concerned Purchase executives for arranging gate pass for them.

5. SPECIFICATION, DRAWINGS & STANDARD.

a) Bidders must give their detailed specification in the quotation along with relevant technical literature / catalogue etc. against the tender enquiry.

b) The Bid should be accompanied with relevant copies of catalogues, drawings or specification as per tender enquiry. If these documents are not furnished, the offer is liable to be rejected.

c) Wherever national / international (N/IN) standards are referred, the latest N/IN standards are to be followed. Mention year & date of standard revision that shall be followed for the supply.

d) All Drawings and Standards are proprietary of BHEL. It must not be used in anyway detrimental to the interest of the company.

6. PRICE SCHEDULE.

a) Kindly quote your prices in figures and words both. In case of any discrepancy in value, the prices quoted in words shall be considered for evaluation and establishing L1 status.

b) Prices quoted should not be more than the prices quoted to any other BHEL units / offices / divisions. Vendor to submit copy of latest Purchase Order placed by any unit of BHEL for similar items in the technical bid. In case no order has been placed on such items, specific confirmation that no order has been placed on such items should be provided.

c) Bidders need to quote their prices on CFR any sea port in Mumbai or FCA basis to the named airport in Euro/USD/JPY/UK Pound/SF/Singapore Dollar or any other Internationally freely tradable currency only. The name of the currency should be clearly indicated in your bids.

d) In case the vendor quotes the prices on CFR basis and BHEL accepts the delivery term on CFR, 0.25 % (of CFR Value) towards port handling charges & 1.5 % (of CFR Value) towards inland freight or actual freight charges as per BHEL freight rate contract whichever is higher, shall be loaded in the prices for ascertaining the landed cost to decide the comparative status of the prices.

e) However, if BHEL agrees to accept the FOB delivery terms, the FOB prices shall be loaded 2.0% (of FOB Value) towards sea freight, 0.25% (of FOB Value) towards port handling charges & 1.5% (of FOB value) towards inland freight for ascertaining the landed cost to decide the comparative status of the prices.

f) **Basis of Evaluation for Bid / Quotation in foreign currency:**

1. Currency exchange rate (TT selling rates of SBI) for evaluation of the bid / quotation received in foreign currency will be as follows:
2. Single part bid – Date of tender opening.
3. Two / Three-part bid – Date of part 1 opening.
4. Reverse auction – Date of part-1 opening.

Note: - Financial evaluation of L1, L2 ------- status will be on the basis of Landed Cost to BHEL.

g) Evaluation of Indian Agents Commission:

1. BHEL prefers to deal directly with foreign bidder, wherever required, for procurement of Goods. However, if the Foreign Principal desires to avail services of an Indian Agent then the Principal should ensure compliance to applicable guidelines.

2. The FOB / CIF price quoted will be deemed to be inclusive of Indian Agency commission. Agency commission if payable shall be converted to Indian Rupees at TT buying rates of exchange ruling on tender opening date which shall not be subjected to any further exchange rate variation, as disclosed by the bidder in his quoted FOB / CIF price will be paid in Indian Rupees on receipt & acceptance of Materials or it's installation at destination, as the case may be. The lower of the TT buying rate prevailing on the date of

technical bid opening shall be considered for computation of Agency commission.

3. In a tender either the Indian Agent on behalf of Principal / OEM or the Principal / OEM itself can bid, but both cannot bid simultaneously for same item / product in the same Tender. If both OEM and its authorized agent submit their bids separately in that case only the offer of OEM can be considered as an exception.

h) While submitting your bids please clearly indicate:

1. Expected weight of goods (lots wise).
2. The size of packed goods.
3. Whether the goods can be dispatched in containers?
4. Port of Loading.
5. Port of Discharge.

7. REVERSE AUCTION.

a) BHEL reserves the right to go for Reverse Auction (RA) instead of opening the sealed envelope price bid, submitted by the bidder. This will be decided after Techno-Commercial Evaluation. All bidders to give their acceptance for participation in RA. Non-acceptance to participate in RA may result in non-consideration of their bids, in case BHEL decides for RA. Detailed guidelines available at our site www.bhel.com

b) In case BHEL decides to go for Reverse Auction, only those bidders who have given their acceptance to participate in RA will be allowed to participate in the Reverse Auction. Those bidders who have given their acceptance to participate in Reverse Auction will have to necessarily submit 'online sealed bid' in the Reverse Auction. Non-Submission of 'online sealed bid' by the bidder will be considered as tampering of the tender process and will invite action by BHEL as per extant guidelines in vogue.

8. DELIVERY TERMS.

a) Goods shall be dispatched by sea, unless stated otherwise in the tender enquiry or purchase order.

b) Specifically confirm your agreement to change the mode by Air at BHEL's request as per mutually agreed terms even after placement of Purchase Orders.

c) The Trans-shipment is not permissible in case of Break Bulk Cargo. In rest of the case Trans-Shipment condition in BHEL purchase order / letter of credit will be as per Uniform Custom and Practice for documentary credits, UCP 600 of International Standard Bank proceed re-issued by International chamber of Commerce (ICC).

d) Any demurrage / Godown Rent payable to the Port Authorities due to any delay attributed by the supplier will be recovered from supplier's account.

e) A certificate of origin (COO) sanctioned in country of origin from chamber of commerce of the manufacturing country is to be provided mandatorily. However, a certificate of origin (COO) from the countries under the restricted list of Govt. of India will not be acceptable.

f) For reasons of delay in receipt of documents from suppliers or due to the same being found to be incomplete, and / or faulty, the suppliers shall be responsible to reimburse in all demurrages / wharfages, if any paid by BHEL (for stated reasons).

g) Load port charges shall be settled by the supplier and not be passed on to BHEL in form of destination charges.

h) In the event of bidder offering CFR delivery terms for delivery in FCL (Full Container Load), the bidder shall provide 21 days' time free of detention for General Purchase Container / High Cube Container and 14 days for the other types from the date of delivery at delivery port. Wherever the detention free period offered is less than the above specified period, the consequential cost at port of clearance

shall be to the account of the bidder. Number of detention free days must be mentioned on Bill of Lading (BL).

i) In case of CFR delivery, Port congestion charges or any additional charges claimed by shipping line till delivery at destination port shall be to the bidder's account.

j) The shipping line should be ready to move the containers to consignees nominated CFS (Container Freight Station) yard and Indian agent of shipping line should issue Cargo Arrival Notice (CAN) 7 days in advance for filing the IGM (Import General Manifest) at discharge port.

k) In case of CFR contract, bidder to supply the material through a Certified Sea worthy vessel.

l) **The invoices being issued by shipping lines must be in the name of BHEL. Any loss in GST due to submission of discrepant document will be recovered from supplier / vendor.**

m) While booking the shipment, bidder to also finalize **destination charges** and the same should appear over BL or agreed tariff to be provided to BHEL before arrival of shipment.

n) If cargo is stuffed in container, then the same should be allowed to be moved to CFS of importers choice without any additional charges.

o) NNDs (Non Negotiable Documents) (preferably with OBLs) should be sent to BHEL as detailed in para "p" (below), at least 7 days in advance i.e. 7 days before the arrival of vessel so as to enable BHEL to move the containers to JWC CFS.

p) **Information related to OBL / AWB Documents:**

I. Consignee name and address should be same as mentioned in the Purchase order.

II. Notify party: Name and address will be as follows :(For discharge port Mumbai or Nhava Sheva)

Bharat Heavy Electricals Limited
14th Floor World Trade Centre-1, Cuffe Parade, Colaba, Mumbai -400005
Email: msseahwr@bhel.in & ppximx@bhelh.in (in case of Sea Shipments)
Email: msair@bhel.in and ppximx@bhel.in (in Case of Air shipments)
For latest updating please refer our web site: www.bhelhwr.co.in

III. OBL should clearly mention the Indian agent address and contact details.

IV. OBL should be issued as per UCP 600.

V. In case of shipments other than FOB, OBL should mention the container detention free period.

VI. In case of placement of an Order, BHEL requests bidder to supply one Original Bill of Lading / AWB directly to BHEL-Mumbai office (Address at Para "p-II") with other non-negotiable documents to ensure timely clearance of goods. The other Original Bill of Ladings (BL) may be routed through bank based on the other agreed terms and conditions of purchase order.

9. PENALTY FOR LATE DELIVERY.

a) Where items of Purchase Order are independently usable.

Penalty for Late Deliveries shall be applicable @0.5% per week or part thereof on the value of respective delayed supplies subject to a maximum of 10% of the value of respective delayed supplies. Value of delayed supplies will mean the Gross Value payable to the vendor (Before LD) against such supplies excluding taxes and duties.

b) Where the total items are required for a main equipment and items are interdependent.

Penalty for Late Deliveries shall be applicable @0.5% per week or part thereof on total value of Purchase Order subject to maximum of 10% of the total value of Purchase Order. Purchase Order value for this purpose shall be the

Total Gross Value payable to the vendor (Before LD) excluding taxes and duties.

"In case of CFR shipment where BHEL accepts the date of inspection as the date of delivery for the purpose of penalty, the vendor has to ensure the shipment within 30 days for containerized cargo and 45 days maximum for Break bulk cargo from the date of inspection. Any delay, beyond this period, which is not attributable to BHEL shall be considered for application of penalty."

"In case of FOB shipment, vendor has to intimate the readiness of cargo after inspection to BHEL nominated Freight forwarder minimum 15 days in advance for containerized cargo and 30 days in advance for Break bulk cargo before the FOB delivery date. The delay in shipment due to late intimation to BHEL nominated freight forwarder and not attributable to BHEL will be considered for application of penalty".

c) Bidders are requested to quote the best delivery meeting the delivery requirements. BHEL reserves the right to reject the offers not meeting BHEL's delivery requirement.

d) Commencement of delivery period shall be reckoned from the date of PO / LOI or any other agreed milestone.

e) Bidder shall deliver the goods in the manner and schedule agreed under the terms and conditions of Purchase order.

f) The delivery date for penalty purpose will be the Bill of Lading Date/Air way bill.

10. PAYMENT TERMS.

a) BHEL's standard payment term is Payment after Receipt and Acceptance of Material / Item at HEEP, BHEL-Store or at desired destination unless otherwise specified in Special Terms attached to the tender enquiry.

b) BHEL reserves the right to accept or reject the offer of the bidder who quotes the payment term other than BHEL's standard payment term.

c) Where the payments are through bank, the documents may be presented for negotiation through BHEL designated banks which will be specified in Purchase order. Documents should be submitted within 5 days of vessel sailing and receipt of OBL from shipping line.

d) In case BHEL agrees for payment through LC, the same shall be irrevocable, unconfirmed and will be opened 30 days prior to the scheduled delivery and will be valid for a period of 60 days.

e) In case of payment after receipt and acceptance of material, 100% payment will be made within 75 days from the date of invoice subject to submission of non-discrepant documents within 15 days of supply as per terms and conditions of Purchase Order. In case any discrepancy found in the documents, BHEL will notify the same to vendor within 7 days of receipt. Vendor has to clear all the discrepancies in one go within 7 days thereafter else the payment may get delayed.

The loading criteria for the different payment terms shall be as under;

Payment Terms		Days of Loading
After Receipt & Acceptance of material within 75 days of supply.		**No Loading**
Against Delivery at BHEL-Stores Haridwar.		**45**
Against documents through bank (CAD):		**45**
Letter of Credit (LC)		**120**
Usance LC	No Loading if usance period is > 120 Days.	
	Loading of days difference i.e difference between 120 days and usance period if the usance period is < 120 days.	
Advance	Delivery Period + 120 Days -Advance Payment Days	

11. BANK GUARANTEE.

In case the bank guarantees are required to be deposited towards security deposit / performance guarantee or for any other purpose as per the terms of this tender enquiry, such bank guarantees of the requisite value in the denominated currency of the purchase order should be from one of the Indian branch of BHEL consortium banks and the bank guarantee should be in the proforma as prescribed by BHEL. The proforma of bank guarantee and the list of consortium banks are displayed at BHEL website www.bhelhwr.co.in. However, in case the bank guarantee is not from BHEL consortium banks, then the bidder has to get the bank guarantee confirmed from one of the Indian branch of BHEL consortium banks and the bank charges for such confirmation will be borne by the bidder.

12. GUARANTEE / WARRANTY AND CORRESPONDING REPAIRS / REPLACEMENT OF GOODS.

a) Goods shall comply with the specifications for material, workmanship and performance. Unless otherwise specified, the warranty shall be for a period of 18 months from the date of receipt. If the delivery is found non-compliant during the warranty period, leading to rejection, the Seller shall arrange free replacement / repair of goods, within one month from the date of intimation or any mutually agreed period. The rejected goods shall be taken away by the Seller at his cost and replaced on Delivered Duty Paid (DDP) (FOR - BHEL Stores / designated destination basis) within such period. In the event of the Seller's failure to comply, Purchaser may take action as appropriate, including Repair / Replenish rejected goods & disposal of rejections, at the risk & cost of the Seller. In case the defects attributable to Seller are detected during processing of the goods at BHEL or at our subcontractor's works, the Seller shall be responsible for free replacement / repair of the goods as required by BHEL.

b) In case the material is rejected, then date of replacement will be considered as the actual date of delivery.

c) The bidder shall have to pay 5% incidental charges while taking back supplied material if it is found rejected on receipt. The rejected material shall be sent back only after receipt of replacement /submission of BG/refund of amount paid.

13. QUALITY REQUIREMENT.

Your bid/quotation should have specific confirmation regarding meeting all our quality requirements such as. (i) Test Certificate (TC), (ii) Guarantee Certificate (GC) / Warranty Certificate (WC), (iii) Quality Plan (QP) (if applicable); and (iv) Pre-Dispatch Inspection at your works (if applicable).

14. VALIDITY.

The quotation should be valid for a minimum period of 90 days effective from the date of opening of tender, unless otherwise specified in the tender enquiry.

15. RIGHT OF ACCEPTANCE.

a) **BHARAT HEAVY ELECTRICALS LIMITED HARIDWAR** reserves the right to reject any or all the bids / quotations without assigning any reason thereof. BHEL also reserves the right to increase or decrease the tendered quantities. Bidders should be prepared to accept order for reduced quantity without any extra charges.

b) Any discount / revised offer / bids submitted by a bidder on its own shall be considered, provided it is received on or before the due date and time of offer / bid submission (Part-1). Conditional discounts shall not be considered for evaluation of tenders.

c) Unsolicited discounts / revised offers / bids given after Part-1 bid opening shall not be accepted. No change in price will be permitted within the validity period asked for in the tender enquiry.

d) In case of changes in scope and / or technical specification and / or commercial terms & conditions having price implication, techno-commercially acceptable bidders shall be asked by BHEL to submit the impact of such changes on their price bids. In case a bidder opts to submit revised price bid instead of impact called for, then latest price bid shall prevail. However, in both situations, original price bid will be necessarily opened.

e) The bidder whose bid is technically not accepted will be informed & EMD wherever submitted shall be returned after finalization of contract. EMD shall be forfeited in the event of bidder opting out after tender opening.

f) BHEL reserves the right to short close the existing Purchase Order / Rate Contract / Work Order or any extension thereof at any stage.

16. TRANSIT INSURANCE.

a) Transit Insurance will be covered by BHEL under its open Marine Insurance Policy. Seller shall inform dispatch particulars (Purchase Order, RR/GR/BL/ AWB, Invoice value etc.) to Finance department (Store bill Section), BHEL Ranipur Haridwar (Uttarakhand -India) with value of consignment to the Purchaser within 07 days of dispatch for BHEL to arrange insurance coverage in its policy. Failure on the part of seller to inform dispatch particulars will make him liable to pay for any transit damages / losses suffered by the Purchaser.

b) If Quoted Prices are inclusive of transit insurance, no weightage shall be given while evaluating the bids for Cost of Insurance, being in BHEL Scope.

17. PHYTOSANITARY CERTIFICATE:

a) As per the Indian Law, all consignments being imported into India by air / sea require a phytosanitary certificate from the country of origin-if articles have been packed with wooden packaging materials. This is mandatory. Please confirm in your offer / dispatch documents that the required phytosanitary certificate will be submitted.

b) Packaging material means any kind of material of plant origin used for packing which include hay, straw wood shavings, wood chips, saw dust, wood waste, wooden pallets, dunnage mats, wooden packages, coir pith, peat or sphagnum moss etc.

18. RISK PURCHASE.

In case of abnormal delays (beyond the maximum late delivery period as per Penalty clause) in supplies / defective supplies or non-fulfillment of any other terms and conditions given in Purchase Order, BHEL may cancel the Purchase Order in full or part thereof, and may also make the purchase of such material from elsewhere / alternative source at the risk and cost of the supplier. BHEL will take all reasonable steps to get the material from alternate source at optimum cost. If bidder does not agree to the above Risk Purchase Clause, BHEL reserves the right to reject the offer. In case for compelling reasons BHEL accepts the offer without acceptance of this clause by the bidder and in the eventuality of Risk Purchase, appropriate action will be taken as per BHEL extant rules. This will be without prejudice to any other right of BHEL under the contract.

19. FORCE MAJEURE CLAUSE.

Notwithstanding any other thing contained anywhere else in the contract or PO (Purchase Order), In case the discharge of obligation under the contract by either party is impeded or made unreasonably onerous, neither party shall be considered in breach of the contract to the extent that performance of their respective obligation is prevented by an event of Force Majeure that arises after the effective date (PO date).

In the above clause, Force Majeure means an event beyond the control of the parties to the contract which prevents a party from complying with any obligation of the contract including but not limited to:

a) Act of God (Such as but not limited to earthquake, drought, tidal waves, floods etc.).
b) War (whether war be declared or not), Hostilities Invasion, Act of foreign enemy etc.
c) Rebellion, revolution, insurrection, civil war etc.
d) Contamination of Radio Activity from any nuclear fuel or from any other nuclear waste or any other hazardous materials.
e) Riots, commotions, strike unless restricted to the employees of supplier.
f) Acts of terrorism.
g) Other unforeseeable circumstances beyond the control of the parties and which the affected party cannot avoid even by using its best efforts.
h) Cancellation of contract by customer.
i) Change in law/ government. Regulation making the performance impossible.

The party claiming to be affected by force majeure shall notify the other party in writing immediately without delay on the intervention and on the cessation of such circumstances.

Irrespective of any extension of time, if an event of force majeure occurs and its effect continues for more than 180 days the affected party shall have right to cancel the contract.

As soon as reasonably practicable following the date of commencement of a Force Majeure Event, and within a reasonable time following the date of termination of a Force Majeure Event, either Party invoking it shall submit to the other Party reasonable proof of the nature of the Force Majeure Event and of its effect upon the performance of the Party's obligations under this Agreement.

The party shall, and shall ensure that its Subcontractors shall, at all times take all reasonable steps within their respective powers and consistent with Good Operating Practices (but without incurring unreasonable additional costs) to:

a) Prevent Force Majeure Events affecting the performance of the party's obligations under this Agreement;
b) mitigate the effect of any Force Majeure Event; and
c) Comply with its obligations under this Agreement.

If the war like situation has developed in a country where a seller's works is located in the P.O. or there is political instability and Indian Embassy located in that country forbids or advises for not having any business dealing with the sellers located in such zone / region/ country, then BHEL reserves the right to cancel the order.

20. NON-DISCLOSURE AGREEMENT.

All Drawing and Technical Documents relating to the product or it's manufacture submitted by one party to the other, prior or subsequent to the formation of contract, shall remain property of the submitting party. Drawing, technical documents or other technical information received by one party, shall not without the consent of the other party, be used for any other purpose than that, for which they were provided. Such technical information shall not without the consent of the submitting party, otherwise be used or copied, reproduced, transmitted or communicated to a third party. Patterns supplied by BHEL will remain BHEL's property which shall be returned by the bidder on demand to BHEL. Bidder shall in no way share or use such intellectual property of BHEL to promote his own business with others. BHEL reserves the right to claim damages from the bidder, or take appropriate penal action as deemed fit against the bidder, for any infringement of the provisions contained herein.

21. SETTLEMENT OF DISPUTES/ARBITRATION.

Any dispute/difference arising out of or in connection with this contract, including any question regarding its existence, validity or termination, shall be referred to and finally resolved by arbitration under the Arbitration and Conciliation Act, 1996 of India by a Sole Arbitrator to be appointed with mutual consent of the parties. Such Sole Arbitrator shall be either a retired judge of Supreme Court or High Court or District Court of India or some Advocate having practiced in Indian Courts. The seat or place of arbitration shall be New Delhi, India. The language to be used in the arbitration shall be English. The governing law of the contract shall be the substantive law of India. In case the parties fail to agree on the appointment of arbitrator within 2 months of the notice invoking arbitration by one party, then the

arbitrator shall be appointed in accordance with the Arbitration and Conciliation Act, 1996 of India.

JURIDICTION: The courts of New Delhi, India, shall have exclusive jurisdiction.

22. INFORMATION TO THE BIDDERS.

a) Purchase related information is available at our Business-to-Business (B2B) Portal available on our website www.bhelhwr.co.in .The user ID & password can be obtained by sending a request to concerned purchase executives.

b) Intimate your change in mail address or communication address or changes, if any, by email to AGM(SDX/MM) giving your bidder Code.

c) Please resolve your rejections and unexecuted overdue purchase order immediately which are posted at our B2B Portal, which can be visited through our site www.bhelhwr.co.in .

d) Copy of this Tender Enquiry is being sent through the post/ Courier / E-mail or by any existing means.

e) Invoice description and Unit of measurement should be strictly in accordance with Purchase order.

f) Unit of measurement for dimension and weight should be in metric system only.

23. MAKE IN INDIA (GOVT-NOTIFICATION).

A. This tender enquiry shall be governed by notification no. P-45021/2/2017-PP (BE-II) dated 28.05.2018 of government of INDIA. Accordingly, the minimum local content, the margin of purchase preference and the procedure for preference to make in INDIA shall be adhered.

B. Default purchase preference shall be 20% to local suppliers with default minimum local content of 50% for all items / works / services unless any of the Nodal Ministry has prescribed, or prescribe in future lower or higher percentage of purchase preference and/or local content in respect of any items / works / services in which case the purchase preference and/ or local content for that particular items / works / services shall be as prescribed by the Nodal Ministry.

C. Vendor to specifically confirm if they are local supplier or not as per above mentioned notification. Accordingly, the local supplier at the time of tender, bidding or solicitation shall be required to provide self-certification that the item offered meets the minimum local content and shall give details of the location(s) at which the local value addition is made.

'Local Supplier' means a supplier or service provider whose product or service offered for procurement meets the minimum local content. 'Local Content' means the mount of value added in India, which shall, unless otherwise prescribed, be the total value of the item procured (excluding net domestic indirect taxes) minus the value of imported content in the item (including all custom duties) as a proportion of the total value, in percent.

D. In cases of Procurement for a Value in Excess of Rs. 10 Crores, the Local Supplier shall be required to provide a Certificate from the Statutory Auditor or Cost Auditor of the Company (in the case of companies) or from a practicing Cost Accountant or practicing Chartered Accountant (in respect of suppliers other than companies) giving the percentage of Local Content.

E. Requirement of Purchase Preference: Purchase preference shall be given to local suppliers in all procurements undertaken in the manner specified hereunder-

a) "In Procurement of Goods, Services or Works in respect of which the Nodal Ministry has communicated that there is sufficient local capacity and local competition, and where the estimated value of procurement is Rs. 50 lakhs or less, only local suppliers shall be eligible. If the estimated value of procurement of such goods or services or works is more than Rs. 50 lakhs, the provisions of below sub-paragraph b or c, as the case may be, shall be apply".

b) "In the procurements of goods or work which are not covered by above paragraph a and which are divisible in nature, the following procedure shall be followed";

   i) Among all qualified bids, the lowest bid will be termed as L1. If L1 is from a local supplier, the contract for full quantity will be awarded to L1.

ii) If L1 bid is not from a local supper, 50% of the order quantity shall be awarded to L1. Thereafter, the lowest bidder among the local suppliers will be invited to match the L1 price for the remaining 50% quantity subject to the local suppliers quoted price falling with in the margin of purchase preference, and contract for that quantity shall be awarded to such local supplier subject to matching the L1 price. In case such lowest eligible local supplier fails to match the L1 price or accepts less than the offered quantity, the next higher local supplier within the margin of purchase preferences shall be invited to match the L1 price for remaining quantity and so on, and contract shall be awarded accordingly. In case some quantity is still left uncovered on local suppliers, then such balance quantity may also be ordered on the L1 bidder.

c) "In procurements of goods or works not covered by sub-paragraph E.a) and which are not divisible and in procurement of services where the bid is evaluated on price alone, the following procedure shall be followed":-

i) Among all qualified bids, the lowest bid will be termed as L1. If L1 is from a local supplier, the contract will be awarded to L1

ii) If L1 is not from a local supplier, the lowest bidder among the local suppliers will be invited to match the L1 price subject to local supplier's quoted price, falling within the margin of purchase preference, and the contract shall be awarded to such local supplier subject to matching the L1 price.

iii) In case such lowest eligible local supplier fails to match the L1 price, the local supplier with the next higher bid within the margin of purchase preference shall be invited to match the L1 price and so on and contract shall be awarded accordingly. In case none of the local suppliers within the margin of purchase preference matches the L1 price, then the contract may be awarded to the L1 bidder.

F. *"For this procurement, Public Procurement (Preference to Make in India), Order 2017 dated 15.06.2017 & 28.05.2018 and subsequent Orders issued by the respective Nodal Ministry shall be applicable even if issued after issue of this NIT but before finalization of contract / PO / WP against this NIT.*

In the event of any Nodal Ministry prescribing higher or lower percentage of purchase preference and/ or local content in respect of this procurement, same shall be applicable."

G. Procurements where estimated value to be procured is less than Rs. 5 lakhs shall be exempted from GOI order No. P-45021/2/2017-PP (BE-II) dated 28.05.2018.

H. *"For procurement of Goods & Services which are divisible in nature, following shall be operated for **MSE bidders** under Public procurement (Preference to make in India), Order 2017 (revision) ;-*

a. If L1 bid is not from local Supplier and price quoted by MSE bidder falls within the margin of Purchase preference (L1+15% for MSEs), then 25 % of total order quantity of respective item (rounded off to nearest number) shall be awarded to MSE bidder, subject to MSE bidder matching the L1 Price. Out of Remaining 75% quantity, distribution shall be operated as per below sub-clause (2) -

b. If Local Supplier (Next to L1, other than MSE) quoted price falling within the Margin of Purchase Preference, and local supplier matches the L1 price, then 50% of remaining Quantity (after allocation of 25% to MSE) i.e. 37.5% shall be awarded to local supplier and 37.5% shall be awarded to Foreign bidder.

Note : L1 Price refers to lowest evaluated / landed cost to company.

For Further details, please refer GOI order no. P-45021 / 2 / 2017 - PP (BE-II) dated 28.05.2018.

24. NOTE.

a) Special conditions of enquiry, if enclosed by BHEL, will supersede the respective standard/general terms of enquiry.

b) Any other Standard terms and Conditions of the bidder attached/referred against the tender enquiry will be treated as null and void ab initio.

c) In order to protect the commercial interests of BHEL, it becomes necessary to take action against suppliers / contractors by way of supervision of business dealings, who either fail to perform or are in default without any

reasonable cause, cause loss of business / money / reputation, indulged in malpractices, cheating, bribery, fraud or any other misconducts or formation of cartel so as to influence the biding process or influence the price etc. Guide- lines for Suspension of Business Dealings with Suppliers / Contractors shall prevail over which is available at BHEL website http://www.bhel.com

d) The bidder along with its associate / collaborators / sub-contractors / sub-vendors / consultants / service providers shall strictly adhere to BHEL Fraud Prevention Policy displayed on BHEL website http://www.bhel.com and shall immediately bring to the notice of BHEL-Management about any fraud or suspected fraud as soon as it comes to their notice.

e) "BHEL shall recover the amount of compensation paid to victim(s) by BHEL towards loss of life / permanent disability due to an accident which is attributable to the negligence of contractor, agency or firm or any of its employees as detailed below;

1. **Victim:** Any person who suffers permanent disablement or dies in an accident as defined below.
2. **Accident:** Any death or permanent disability resulting solely and directly from any unintended and unforeseen injurious occurrence caused during the manufacturing / operation and works incidental thereto at BHEL factories/ **offices and precincts** thereof , project execution , erection and commissioning, services, repairs and maintenance, trouble shooting, serving , overhaul, renovation and retrofitting , trial operation, performance guarantee testing undertaken by the company or during any works / during working at BHEL Units/ Offices/ townships and premises/ project sites.
3. **Compensation in respect of each of the victims:**

(i) In the event of death or **permanent disability** resulting from **Loss of both limbs:** Rs. 10,00,000/-(Rs. Ten Lakh).

(ii) In the event of **other permanent disability**: Rs. 7,00,000/- (Rs. Seven Lakh).

Permanent Disablement: A disablement that is classified as a permanent total disablement under the proviso to Section 2(I) of the Employees Compensation Act, 1923."

BHARAT HEAVY ELECTRICALS LIMITED

HEEP-HARIDWAR, UTTARAKHAND (249403)

General Instructions and Standard Terms & Conditions for bidding against Tender Enquiry (GISTC)

For Indian Bidders (Version April-2019, Rev: 04)

Table of Contents

1. GENERAL 1
2. ORIGIN OF QUOTATION 1
3. SUBMISSION OF TENDER 1
4. TENDER OPENING 2
5. SPECIFICATION, DRAWINGS & STANDARD 2
6. PRICE SCHEDULE 3
7. REVERSE AUCTION 3
8. DELIVERY TERMS 4
9. PENALTY FOR LATE DELIVERY 4
10. PAYMENT TERMS 4
11. TAXES & DUTIES 5
12. BANK GUARANTEE 6
13. GUARANTEE / WARRANTY AND CORRESPONDING REPAIRS / REPLACEMENT OF GOODS 6
14. QUALITY REQUIREMENT 6
15. VALIDITY 6
16. RIGHT OF ACCEPTANCE 6
17. TRANSIT INSURANCE 7
18. RISK PURCHASE 7
19. FORCE MAJEURE CLAUSE 7
20. NON-DISCLOSURE AGREEMENT 8
21. SETTLEMENT OF DISPUTES / ARBITRATION 8
22. WHARFAGE / DEMURRAGE RESPONSIBILITY 8
23. CONDITIONS FOR AVAILING MICRO & SMALL ENTERPRISES (MSE'S) BENEFITS 8
24. INFORMATION TO THE BIDDERS 10
25. MAKE IN INDIA (GOVT-NOTIFICATION) 10
26. NOTE 11

1. GENERAL.

These general terms & conditions shall apply to all the Tender Enquiries, notice inviting tenders, request for quotations concerning the supply of goods and / or rendering of services to Bharat Heavy Electricals Ltd., HEEP, Haridwar (hereinafter referred to as BHEL or the Purchaser). In case of placement of order these conditions will become part of Purchase Order (P.O) until unless the deviations are specifically agreed by BHEL.

2. ORIGIN OF QUOTATION.

a) The quotation should preferably be from the principal bidder. However tender specific authorized registered dealer/agent can also submit the bid on their behalf, failing which the quotation is liable to be ignored. BHEL prefers to deal directly with the principal manufacturers.

b) An agent cannot quote on behalf of more than one principal in the same Tender Enquiry.

3. SUBMISSION OF TENDER.

a) Bid / Quotation must be enclosed in sealed cover on which tender enquiry number and the due date MUST BE written and be invariably sent under REGISTERED POST / SPEED POST / COURIER / Dropped in the Tender Box: addressed as follows: -

Quotation against Enquiry No._____
Dated: _____
Due on: _____
To,

THE HEAD OF MATERIALS MANAGEMENT,
Heavy Electrical Equipment Plant,
Bharat Heavy Electricals Limited,
HARIDWAR-249403 (Uttarakhand), INDIA.

b) TENDER ROOM is located at: Room No. - 415, 4th Floor, Main Admin. Building, BHEL-HEEP, Haridwar.

c) In case of Three / Two Part Bid, technical bid containing technical offer, duly signed and un-priced copy of the Price Bid should be kept in one envelope. Price Bid containing only the price should be kept in a separate envelope. All envelopes indicating Part-1 or Part-2 or Part-3 as the case may be to be put in a bigger envelope. Please note that un-priced bid should be the exact replica of price bid but without prices.

d) The bid / quotation must be posted before due date, keeping allowance for postal transit time. Quotations sent by any mode but not received in time will be ignored. Tender received through authorized E-mail is also acceptable. However, in time submission of tender in tender box shall be the responsibility of the bidder, sent through any mode. Documents submitted with the offer / bid shall be signed and stamped in each page by authorized representative of the bidder.

e) Any additional documents submitted by supplier / bidder, during processing of registration application / tender or after placement of order shall not be accepted unless it is submitted with forwarding letter and duly signed and stamped.

f) The bids of the bidders who are on the banned list and also the bids of the bidders, who engage the services of the banned firms, shall be rejected. The cutting / overwriting in the bid / offer must be duly attested by the signatories to the bid. The list of firms banned by BHEL is available on BHEL web site www.bhel.com.

g) Being PMD vendor, if you are not quoting against this tender enquiry, please send your regret letter positively for our reference with valid reasons for not participating in the tender enquiry. Repeated lack of response on the part of bidder may lead to deletion such PMD vendor from BHEL's approved vendor list.

h) The bidders will submit Integrity Pact, duly signed by its authorized signatory, along with their bids wherever estimated tender value is Rs. 5 Crore or more.

i) In case of open tender, the unregistered bidder shall submit inter alia duly filled-in Supplier Registration Form (SRF) along with the bid. Bidders can download the SRF from www.bhel.com

j) BHEL reserves the right to award tendered quantities among more than one bidder (after acceptance of L1 price by the other bidders). BHEL can also consider awarding of part of the tendered quantity to other than L-1 bidder at **L1 counter offered rates**, if the quantity offered by the L-1 bidder is less than the quantity tendered for.

k) In case of e-Tendering (Online bidding through e-portal), offline bid submitted in hard copy or in any other form by the vendor / supplier will not be accepted and will be rejected out rightly. Only e-portal bid will be accepted.

4. TENDER OPENING.

Tender opening is scheduled to start in the Tender Room at 2:00 PM, on the due date. Therefore, bid / quotations must reach this office / tender Box latest by 1:45 PM on due date. Only participating bidders are allowed to attend tender opening. **TENDERS RECEIVED AFTER THE SPECIFIED TIME OF THEIR 'SUBMISSION' WILL BE TREATED AS LATE TENDERS AND SHALL NOT BE CONSIDERED UNDER ANY CIRCUMSTANCES.** The bidders or their authorized representatives may be allowed to attend tender opening if duly authorized by their principals, through a tender specific letter on that particular day. General authorization letter is not acceptable.

Note: - Foreign bidders willing to attend the bid opening has to provide the requisite documents to the concerned Purchase executives for arranging gate pass for them.

5. SPECIFICATION, DRAWINGS & STANDARD.

a) Bidders must give their detailed specification in the quotation along with relevant technical literature / catalogue etc. against the tender enquiry.

b) The Bid should be accompanied with relevant copies of catalogues, drawings or specification as per tender enquiry. If these documents are not furnished, the offer is liable to be rejected.

c) Wherever national / international (N/IN) standards are referred, the latest N/IN standards are to be followed. Mention year & date of standard revision that shall be followed for the supply.

d) All Drawings and Standards are proprietary of BHEL. It must not be used in anyway detrimental to the interest of the company.

6. PRICE SCHEDULE.

a) Kindly quote your prices in figures and words both. In case of any discrepancy in value, the prices quoted in words shall be considered for evaluation and establishing L1 status.

b) Prices quoted should not be more than the prices quoted to any other BHEL units / offices / divisions. Vendor to submit copy of latest Purchase Order placed by any unit of BHEL for similar items in the technical bid. In case no order has been placed on such items, specific confirmation that no order has been placed on such items should be provided.

c) Prices should be quoted on F.O.R. Destination basis. Transit insurance shall be arranged by BHEL and not to be included in the prices. The offers quoted on other than F.O.R destination basis may result in non-consideration of such bids.

d) In case BHEL accepts the EX-Works prices, such offers will be loaded by 1.5% of EX-Works value towards freight or with actual freight charges as per BHEL freight rate contract whichever is higher.

e) In case of Indigenous items covered by DGS & D Rate Contract, the bidders should submit latest valid copy of the rate contract along with bid / quotation

f) Applicable **IGST / CGST / SGST** and any other statutory levy should be indicated separately and clearly in the bid / quotation.

g) Bidders can dispatch goods through any Indian Bank Association approved transporters having their branch at HARIDWAR / destination. If material is dispatched through other than Indian Bank Association approved transporter, material to be delivered on door delivery BHEL Stores basis.

h) In case of dispatch of material through any other unapproved transporter, payment shall be made only after receipt of material and any additional charges payable to the transporter shall be to the bidder's account.

i) Any demurrage / godown rent payable to the transporter / or to godown's owner due to any delay attributed by the supplier shall be recovered from supplier's account.

NB: Financial evaluation of L1, L2 …..Status will be on the basis of Landed Cost to BHEL.

7. REVERSE AUCTION.

a) BHEL reserves the right to go for Reverse Auction (RA) instead of opening the sealed envelope price bid, submitted by the bidder. This will be decided after Techno-Commercial Evaluation. All bidders to give their acceptance for participation in RA. Non-acceptance to participate in RA may result in non-consideration of their bids, in case BHEL decides for RA. Detailed guidelines available at our site www.bhel.com

b) In case BHEL decides to go for Reverse Auction, only those bidders who have given their acceptance to participate in RA will be allowed to participate in the Reverse Auction. Those bidders who have given their acceptance to participate in Reverse Auction will have to necessarily submit 'online sealed bid' in the Reverse Auction. Non-Submission of 'online sealed bid' by the bidder will be considered as tampering of the tender process and will invite action by BHEL as per extant guidelines in vogue.

8. DELIVERY TERMS.

a) Goods shall be delivered on 'FOR Destination' basis to the named destination unless otherwise called for in the tender enquiry.

b) Loading on account of 3rd party inspection charges in case of Indian bidders shall be 0.20%.

9. PENALTY FOR LATE DELIVERY.

a) Where items of Purchase Order are independently usable.

Penalty for Late Deliveries shall be applicable @0.5% per week or part thereof on the value of respective delayed supplies subject to a maximum of 10% of the value of respective delayed supplies. Value of delayed supplies will mean the Gross Value payable to the vendor (Before LD) against such supplies excluding taxes and duties.

b) Where the total items are required for a main equipment and items are interdependent.

Penalty for Late Deliveries shall be applicable @0.5% per week or part thereof on total value of Purchase Order subject to maximum of 10% of the total value of Purchase Order. Purchase Order value for this purpose shall be the Total Gross Value payable to the vendor (Before LD) excluding taxes and duties.

c) Bidders are requested to quote the best delivery meeting the delivery requirements. BHEL reserves the right to reject the offers not meeting BHEL's delivery requirement.

d) Commencement of delivery period shall be reckoned from the date of PO / LOI or any other agreed milestone.

e) Bidder shall deliver the goods in the manner and schedule agreed under the terms and conditions of Purchase order.

f) **DELIVERY IN CASE OF REJECTION:** In case the material is rejected, then date of replacement will be considered as the actual date of delivery.

g) **DELIVERY AGAINST BANK DOCUMENTS:** In case payment terms quoted by bidder are documents through bank, and the delivery terms being "FOR Haridwar / FOR Transporter Go-down" then date of delivery will be date of intimation by transporter / bidder of delivery of material at Haridwar for the penalty purpose.

g) Where the payments are through bank, the documents may be presented for negotiation to BHEL authorized / nominated bank.

10. PAYMENT TERMS.

a) BHEL's standard payment term is Payment after receipt and acceptance of materials / items at HEEP, BHEL-Store or at desired destination unless otherwise specified in Special Terms attached to the tender enquiry.

b) BHEL reserves the right to accept or reject the offer of the bidder who quotes the payment term other than BHEL's standard payment term.

c) Loading on account of deviation in payment terms shall be done as per extant rules of BHEL-Haridwar.

d) 100% payment along with taxes, freight & insurance will be made after receipt and acceptance of material and within 75 days from the date of invoice subject to submission of non-discrepant documents within 15 days of supply as per terms and conditions of Purchase Order. In case any discrepancy found in the documents, BHEL will notify the same to vendor within 7 days of receipt. Vendor has to clear all the discrepancies in one go within 7 days thereafter else the payment of vendor may get delayed.

e) For MSEs (covered under MSME Act) which are registered and periodically renewed with BHEL, the payment will be made within 45 days or as prescribed in the relevant act.

f) Adherence to the above time schedule of payment is contingent upon Vendor complying with GST Rules w.r.t availment of Input Tax Credit by BHEL.

g) In case GST credit is delayed / denied to BHEL, due to non / delayed receipt of goods and / or tax invoice or expiry of the timeline prescribed in GST Law for availing such ITC, or any other reason not attributable to BHEL, GST amount shall be

recoverable from Vendor along with interest levied / leviable on BHEL.

h) The taxes and duties that are reimbursed would be the ones applicable as on the contractual Purchase order delivery date or the amount actually paid whichever is less.

i) **The loading criteria for the different payment terms shall be as under;**

Payment Terms		Days of Loading
After Receipt & Acceptance of material within 75 days of supply.		**No Loading**
Against Delivery at BHEL-Stores Haridwar.		**45**
Against documents through bank (CAD):		**45**
Letter of Credit (LC)		**120**
Usance LC	No Loading if usance period is > 120 Days.	
	Loading of days' difference i.e. difference between 120 days and usance period if the usance period is < 75 days.	
Advance	Delivery Period + 120 Days - Advance Payment Days.	

11. TAXES & DUTIES.

a) The bidder to specify in their offer (part 1 bid) the category of their registration under GST like Registered, Unregistered and composite dealer.

b) The provisional GST registration number of Bharat Heavy Electrical Ltd, Heavy Electricals Equipment Plant, Ranipur, Haridwar is "05AAACB4146P1ZL" with state Code as "05" and State Name as "Uttarakhand".

c) Please quote our provisional GST registration number in all invoices raised for supply of goods and services under GST regime and also ensure filing of timely return and payment of tax and compliance of other applicable provisions on supplier under GST regime.

d) No GST will be reimbursed to unregistered or composite dealer. In the event, any GST is quoted by composite dealer, the same shall be added to the cost of supply in evaluating the bid.

e) Since, input credit of GST will be available to BHEL-Haridwar only after correct filing of return and payment of applicable GST by supplier, reimbursement of GST shall be made by BHEL-Haridwar on matching of vendor inputs at GST portal, ensuring availability of input credit to BHEL Haridwar. Payment of GST will be made to vendor after matching of input credit and vendor to ensure submission of their invoices along with consent to accept payment of tax after such matching in all cases where bills are submitted directly to BHEL-Haridwar or through bank or under LC or through any other mode.

f) In the event of any disallowance of input credit or applicability of interest or any other financial liability arises on BHEL-Haridwar due to any default of supplier under GST, such implication shall be to supplier's account.

g) In the event of any change in the status of the vendor after the submission of the bid but before the supply, GST applicable at the time of supply or in the bid, based on the registration status of the vendor, whichever is lower shall be payable.

h) Where ever applicable If PAN (Permanent Account Number) of the recipient is not available, income tax is deductible either at the normal rate or at the rate of 20 percent, whichever is higher as per Section 206AA of Indian Income Tax Act 1961.

i) The bidder shall clearly indicate HSN (*Harmonised System Nomenclature)* / SAC (*Service Accounting Code*), its description and applicable rate of GST for each item in his techno-commercial bid.

j) Statutory Variation in Taxes & duties as applicable at the time of supply shall be payable. However, in the event of no change in law but bidder quoting certain tax structure in bid document which is lower than the applicable one, such amount shall be the maximum amount of tax that can be claimed by bidder.

k) **IMPORTED GOODS OFFERED BY INDIAN BIDDERS AGAINST DEALER INVOICE:** Wherever the material being offered is imported, the bidder must quote the prices inclusive of IGST. The rate and value of IGST as included in the price must be indicated separately. In case quantum of IGST is not mentioned by the bidder the same will not be considered for evaluation. However, bidder will have to pass on the benefit of IGST to BHEL at the time supply.

l) In case of directly dispatchable items to Customer's Site, BHEL-Haridwar will inform the GST registration number of the respective customer which must be mentioned on the vendor's invoice. Vendor to ensure availability of such information from BHEL-Haridwar before dispatch of any material. However, while filing GSTN-1, BHEL Haridwar GSTN number to be quoted.

Note: - Vendors must ensure compliance of all the applicable rules and procedure as envisaged in the GST Regime. Any loss to BHEL-Haridwar due to fault / non-compliance by the vendor will be to the vendor's account.

12. BANK GUARANTEE.

In case the bank guarantees are required to be deposited towards security deposit/performance guarantee or for any other purpose as per the terms of this tender enquiry, such bank guarantees of the requisite value in the denominated currency of the purchase order should be from one of the Indian branch of BHEL consortium banks and the bank guarantee should be in the proforma as prescribed by BHEL. The proforma of bank guarantee and the list of consortium banks are displayed at BHEL website www.bhelhwr.co.in. However, in case the bank guarantee is not from BHEL consortium banks, then the bidder has to get the bank guarantee confirmed from one of the Indian branch of BHEL consortium banks and the bank charges for such confirmation will be borne by the bidder.

13. GUARANTEE / WARRANTY AND CORRESPONDING REPAIRS / REPLACEMENT OF GOODS.

Goods shall comply with the specifications for material, workmanship and performance. Unless otherwise specified, the warranty shall be for a period of 18 months from the date of receipt. If the delivery is found non-compliant during the warranty period, leading to rejection, the Seller shall arrange free replacement / repair of goods, within one month from the date of intimation or any mutually agreed period. The rejected goods shall be taken away by the Seller at his cost and replaced on Delivered Duty Paid (DDP) (FOR - BHEL Stores / designated destination basis) within such period. In the event of the Seller's failure to comply, Purchaser may take action as appropriate, including Repair / Replenish rejected goods & disposal of rejections, at the risk & cost of the Seller. In case the defects attributable to Seller are detected during processing of the goods at BHEL or at our subcontractor's works, the Seller shall be responsible for free replacement / repair of the goods as required by BHEL.

b) **RETURN OF REJECTED MATERIAL FOR REPLACEMENT:** The bidder shall have to pay 5% incidental charges while taking back supplied material if it is found rejected on receipt. The rejected material shall be sent back only after receipt of replacement / submission of BG / refund of amount paid.

14. QUALITY REQUIREMENT.

Your bid / quotation should have specific confirmation regarding meeting all our quality requirements such as. (i) Test Certificate (TC), (ii) Guarantee Certificate (GC) / Warranty Certificate (WC), (iii) Quality Plan (QP) (if applicable); and (iv) Pre-Dispatch Inspection at your works (if applicable).

15. VALIDITY.

The quotation should be valid for a minimum period of 90 days effective from the date of opening of tender, unless otherwise specified in the tender enquiry.

16. RIGHT OF ACCEPTANCE.

a) **BHARAT HEAVY ELECTRICALS LIMITED HARIDWAR** reserves the right to reject any or all the bids / quotations without assigning any reason thereof. BHEL also reserves the right to increase or decrease the tendered quantities. Bidders should be prepared to accept order for reduced quantity without any extra charges.

b) Any discount / revised offer / bids submitted by a bidder on its own shall be considered, provided it is received on or before the due date and time of offer / bid submission (Part-1). Conditional discounts shall not be considered for evaluation of tenders.

c) Unsolicited discounts / revised offers / bids given after Part-1 bid opening shall not be accepted. No change in price will be permitted within the validity period asked for in the tender enquiry.

d) In case of changes in scope and / or technical specification and / or commercial terms & conditions having price implication, techno-commercially acceptable bidders shall be asked by BHEL to submit the impact of such changes on their price bids. In case a bidder opts to submit revised price bid instead of impact called for then the latest price bid shall prevail. However, in both situations, original price bid will be necessarily opened.

e) The bidder whose bid is technically not accepted will be informed & EMD wherever submitted shall be returned after finalization of contract. EMD shall be forfeited in the event of bidder opting out after tender opening.

f) BHEL reserves the right to short close the existing Purchase Order / Rate Contract / Work Order or any extension thereof at any stage.

17. TRANSIT INSURANCE.

a) Transit Insurance will be covered by BHEL under its open Insurance Policy. Seller shall inform dispatch particulars (Purchase Order, RR /GR, Invoice value etc.) to "Finance department (Store bill Section), BHEL Ranipur, Haridwar (Uttarakhand-India) with value of consignment to the Purchaser within 07 days of dispatch for BHEL to arrange insurance coverage in its policy. Failure on the part of seller to inform dispatch particulars will make him liable to pay for any transit damages / losses suffered by the Purchaser.

b) If Quoted Prices are inclusive of transit insurance, no weightage shall be given while evaluating the bids for Cost of Insurance, being in BHEL Scope.

18. RISK PURCHASE.

In case of abnormal delays (beyond the maximum late delivery period as per Penalty clause) in supplies / defective supplies or non-fulfillment of any other terms and conditions given in Purchase Order, BHEL may cancel the Purchase Order in full or part thereof, and may also make the purchase of such material from elsewhere / alternative source at the risk and cost of the supplier. BHEL will take all reasonable steps to get the material from alternate source at optimum cost. If bidder does not agree to the above Risk Purchase Clause, BHEL reserves the right to reject the offer. In case for compelling reasons BHEL accepts the offer without acceptance of this clause by the bidder and in the eventuality of Risk Purchase, appropriate action will be taken as per BHEL extant rules. This will be without prejudice to any other right of BHEL under the contract.

19. FORCE MAJEURE CLAUSE.

Notwithstanding any other thing contained anywhere else in the contract or PO (Purchase Order), In case the discharge of obligation under the contract by either party is impeded or made unreasonably onerous, neither party shall be considered in breach of the contract to the extent that performance of their respective obligation is prevented by an event of Force Majeure that arises after the effective date (PO date).

In the above clause, Force Majeure means an event beyond the control of the parties to the contract which prevents a party from complying with any obligation of the contract including but not limited to:

a) Act of God (Such as but not limited to earthquake, drought, tidal waves, floods etc.).
b) War (whether war be declared or not), Hostilities Invasion, Act of foreign enemy etc.
c) Rebellion, revolution, insurrection, civil war etc.

d) Contamination of Radio Activity from any nuclear fuel or from any other nuclear waste or any other hazardous materials.
e) Riots, commotions, strike unless restricted to the employees of supplier.
f) Acts of terrorism.
g) Other unforeseeable circumstances beyond the control of the parties and which the affected party cannot avoid even by using its best efforts.
h) Cancellation of contract by customer.
i) Change in law / government. Regulation making the performance impossible.

The party claiming to be affected by force majeure shall notify the other party in writing immediately without delay on the intervention and on the cessation of such circumstances.

Irrespective of any extension of time, if an event of force majeure occurs and its effect continues for more than 180 days the affected party shall have right to cancel the contract.

As soon as reasonably practicable following the date of commencement of a Force Majeure Event, and within a reasonable time following the date of termination of a Force Majeure Event, either Party invoking it shall submit to the other Party reasonable proof of the nature of the Force Majeure Event and of its effect upon the performance of the Party's obligations under this Agreement.

The party shall, and shall ensure that its Subcontractors shall, at all times take all reasonable steps within their respective powers and consistent with Good Operating Practices (but without incurring unreasonable additional costs) to:

a) Prevent Force Majeure Events affecting the performance of the party's obligations under this Agreement.
b) mitigate the effect of any Force Majeure Event and
c) Comply with its obligations under this Agreement.

If the war like situation has developed in a country where a seller's works is located in this P.O. or there is political instability and Indian Embassy located in that country forbids or advises for not having any business dealing with the sellers located in such zone / region/ country, then BHEL reserves the right to cancel the order.

20. NON-DISCLOSURE AGREEMENT.

All Drawing and Technical Documents relating to the product or it's manufacture submitted by one party to the other, prior or subsequent to the formation of contract, shall remain property of the submitting party. Drawing, technical documents or other technical information received by one party, shall not without the consent of the other party, be used for any other purpose than that, for which they were provided. Such technical information shall not without the consent of the submitting party, otherwise be used or copied, reproduced, transmitted or communicated to a third party. Patterns supplied by BHEL will remain BHEL's property which shall be returned by the bidder on demand to BHEL. Bidder shall in no way share or use such intellectual property of BHEL to promote his own business with others. BHEL reserves the right to claim damages from the bidder, or take appropriate penal action as deemed fit against the bidder, for any infringement of the provisions contained herein.

21. SETTLEMENT OF DISPUTES / ARBITRATION.

In all cases of dispute, the mater shall be referred for ARBITRATION by sole arbitrator to be appointed by the Unit Head of Bharat Heavy Electricals Ltd., at HARIDWAR. The award of the Arbitrator shall be final and binding on both the parties. The place of Arbitration shall be Haridwar.

JURIDICTION: The courts of Haridwar, India, shall have exclusive jurisdiction.

22. WHARFAGE / DEMURRAGE RESPONSIBILITY.

In the event of delay in receipt of documents by Manager (Stores-Shipping) BHEL-Haridwar and in case where dispatches are made through Unapproved Transporter the sole responsibility for wharfage / demurrage for such delay shall be that of supplier.

23. CONDITIONS FOR AVAILING MICRO & SMALL ENTERPRISES (MSE'S) BENEFITS.

a) "MSE Suppliers can avail the intended benefits only if they submit along with the offer, attested copies of either EM II certificate having deemed validity (**five years** from the date of

issue of acknowledgement in EM II) or valid NSIC certificate or EM II certificate along with attested copy of a CA certificate (Format enclosed at annexure-1 where deemed validity of EM II certificate of five years has expired) applicable for the relevant financial year (latest audited). Date to be reckoned for determining the deemed validity will be the date of bid opening (Part 1 in case of two-part bid) or vendor has to give Udyog Adhar Memorandum (UAM). Non submission of such documents will lead to consideration of their bid at par with other bidders. No benefit shall be applicable for this enquiry if any deficiency in the above required documents is found or the requisite documents are not submitted before price bid opening. If the tender is to be submitted through e-procurement portal, then the above require document are to be uploaded on the portal. Documents should be notarized or attested by a Gazetted officer." **UAM need not required to be notarized or attested.**

b) Any new supplier will be eligible for registration with BHEL as MSE supplier provided at least any one of the following documents are submitted along with application for registration: -

1. Udyog Adhar Memorandum (UAM).
2. Valid National Small Industries Commission (NSIC) Certificate.
3. Entrepreneurs Memorandum part II (EM II) certificate (valid based on deemed validity of 5 years) or
4. EM II certificate along with attested copy of CA Certificate (as per prescribed format at annexure-A) applicable for the relevant financial year (latest audited), where the deemed validity of EM II is over.
5. However, credentials of all MSE suppliers will be verified before advancing the intended benefits.
6. MSE bidders claiming SC/ST status will have to submit SC/ST certificate of the Proprietor from competent authority. Attested (notarized or attested by Gazetted officer) copy to be submitted along with the offer.
7. In case techno-commercial accepted bidders include MSE source and their prices (based on landed cost – considering quoted prices) are within the price band of 15% w.r.t. L-1 bidder, then BHEL can offer **25%** of quantity of respective item (rounded off to nearest number) to MSE bidders at L-1 price and in case, more than one MSE bidder is in 15 % band and the same is accepted by more than one MSE bidders then **25%** quantities of respective items will be considered for ordering on proportionate basis amongst MSE bidders.
8. There will be minimum of **3%** reservation for women owned MSEs within the above mentioned 25% reservation.
9. The reservation for MSEs owned by SC/ST will be **6.25% {** 25% out of target of 25% - refer para 4 of Public Procurement Policy for the Micro and Small Enterprises(MSEs)}.
10. The definition of MSEs owned by Women Entrepreneurs is clarified as under:
    a) In case of proprietary MSE, proprietor shall be Woman.
    b) In case of partnership MSE, the Woman partners shall be holding at least 51% of share in the unit.
    c) In case of Private Limited companies, at least 51% share shall be held by Women promoters.
11. The definition of MSEs owned by SC/ST is clarified as under:
    a) In case of proprietary MSE, proprietor(s) shall be SC/ST.
    b) In case of partnership MSE, the SC/ST partners shall be holding at least 51% of shares in the unit.
    c) In case of Private Limited companies, at least 51% share shall be held by SC/ST promoters.
12. While distributing the **25%** quantity amongst MSE bidders the decimal points in quantity shall be ignored for all the bidders except the L-1 amongst MSE bidders. Balance quantity after allocating the quantity to other MSE bidders ignoring the quantities in decimal, shall be given to L-1 (amongst MSE) bidder. However, if there are more than one MSE bidder at the same price level than preference for additional quantities due to ignoring off the decimal (as mentioned above) shall be given to the bidder offering favorable terms to BHEL and if the conditions offered are also same then preference will be given to the bidder having high SPR rating.
13. In case there are more than one MSE bidders (with different landed cost to BHEL) within 15% price band of lowest bidder and quantity to be offered is 1 no. only, then preference shall be given to the MSE bidder with lowest landed cost.
14. In case there are more than one MSE bidders (with same landed cost to BHEL) within 15% price band of lowest bidder and quantity to be offered is 1 no. only, then preference shall be given first, based on the favorable terms in the bid and in case terms are also same, the bidder with high SPR rating shall be given preference.

15. If L1 bidder is MSE bidder, entire quantity will be given to such MSE bidder only.
16. Note: It may however be noted that MSE guidelines as on date (Date of Technical Bid Opening Part-1) shall prevail.
17. "As per the OM No. F.No. 1(2)(1)/2016-MA dtd. 09.02.2017 issued from the Office of Development Commissioner (Micro, Small & Medium Enterprises), "Traders and agents should not be allowed to avail the benefits extended under the PP Policy."

In view of this, it is clarified that benefits of MSE (such as EMD Waiver, Tender fee exemption, Price preference, Payment preference etc.) will be given only to those MSE Vendors who are manufacturers of offered items against the NIT. No MSE benefits shall be provided to Agents / Stockists / Dealers / Traders etc. for the items offered but not manufactured by themselves."

24. INFORMATION TO THE BIDDERS.

a) Purchase related information is available at our Business-to-Business (B2B) Portal available on our website www.bhelhwr.co.in The user ID & password can be obtained by sending a request to concerned purchase executives.

b) Intimate your change in mail address or communication address or changes, if any, by email to AGM (SDX/MM) giving your bidder Code.

c) Please resolve your rejections and unexecuted overdue purchase order immediately which are posted at our B2B Portal, which can be visited through our site www.bhelhwr.co.in

d) Copy of this Tender Enquiry is being sent through the post.

25. MAKE IN INDIA (GOVT-NOTIFICATION).

A. This tender enquiry shall be governed by notification no. P-45021/2/2017-PP (BE-II) dated 28.05.2018 of government of INDIA. Accordingly, the minimum local content, the margin of purchase preference and the procedure for preference to make in INDIA shall be adhered.

B. Default purchase preference shall be 20% to local suppliers with default minimum local content of 50% for all items / works / services unless any of the Nodal Ministry has prescribed, or prescribe in future lower or higher percentage of purchase preference and/or local content in respect of any items / works / services in which case the purchase preference and/ or local content for that particular items / works / services shall be as prescribed by the Nodal Ministry.

C. Vendor to specifically confirm if they are local supplier or not as per above mentioned notification. Accordingly, the local supplier at the time of tender, bidding or solicitation shall be required to provide self-certification that the item offered meets the minimum local content and shall give details of the location(s) at which the local value addition is made.

'Local Supplier' means a supplier or service provider whose product or service offered for procurement meets the minimum local content. 'Local Content' means the mount of value added in India, which shall, unless otherwise prescribed, be the total value of the item procured (excluding net domestic indirect taxes) minus the value of imported content in the item (including all custom duties) as a proportion of the total value, in percent.

D. In cases of Procurement for a Value in Excess of Rs. 10 Crores, the Local Supplier shall be required to provide a Certificate from the Statutory Auditor or Cost Auditor of the Company (in the case of companies) or from a practicing Cost Accountant or practicing Chartered Accountant (in respect of suppliers other than companies) giving the percentage of Local Content.

E. Requirement of Purchase Preference: Purchase preference shall be given to local suppliers in all procurements undertaken in the manner specified hereunder-

a. "In Procurement of Goods, Services or Works in respect of which the Nodal Ministry has communicated that there is sufficient local capacity and local competition, and where the estimated value of procurement is Rs. 50 lakhs or less, only local suppliers shall be eligible. If the estimated value of procurement of such goods or services or works is more than Rs. 50 lakhs, the provisions of below sub-paragraph b or c, as the case may be, shall be apply".

b. "In the procurements of goods or work which are not covered by above paragraph a and which are divisible in nature, the following procedure shall be followed";

i) Among all qualified bids, the lowest bid will be termed as L1. If L1 is from a local supplier, the contract for full quantity will be awarded to L1.

ii) If L1 bid is not from a local supper, 50% of the order quantity shall be awarded to L1. Thereafter, the lowest bidder among the local suppliers will be invited to match the L1 price for the remaining 50% quantity subject to the local suppliers quoted price falling with in the margin of purchase preference, and contract for that quantity shall be awarded to such local supplier subject to matching the L1 price. In case such lowest eligible local supplier fails to match the L1 price or accepts less than the offered quantity, the next higher local supplier within the margin of purchase preferences shall be invited to match the L1 price for remaining quantity and so on, and contract shall be awarded accordingly. In case some quantity is still left uncovered on local suppliers, then such balance quantity may also be ordered on the L1 bidder.

c. "In procurements of goods or works not covered by sub-paragraph E.a) and which are not divisible and in procurement of services where the bid is evaluated on price alone, the following procedure shall be followed":-

i) Among all qualified bids, the lowest bid will be termed as L1. If L1 is from a local supplier, the contract will be awarded to L1

ii) If L1 is not from a local supplier, the lowest bidder among the local suppliers will be invited to match the L1 price subject to local supplier's quoted price, falling within the margin of purchase preference, and the contract shall be awarded to such local supplier subject to matching the L1 price.

iii) In case such lowest eligible local supplier fails to match the L1 price, the local supplier with the next higher bid within the margin of purchase preference shall be invited to match the L1 price and so on and contract shall be awarded accordingly. In case none of the local suppliers within the margin of purchase preference matches the L1 price, then the contract may be awarded to the L1 bidder.

F. *"For this procurement, Public Procurement (Preference to Make in India), Order 2017 dated 15.06.2017 & 28.05.2018 and subsequent Orders issued by the respective Nodal Ministry shall be applicable even if issued after issue of this NIT but before finalization of contract / PO / WP against this NIT.*

In the event of any Nodal Ministry prescribing higher or lower percentage of purchase preference and/ or local content in respect of this procurement, same shall be applicable."

G. Procurements where estimated value to be procured is less than Rs. 5 lakhs shall be exempted from GOI order No. P-45021/2/2017-PP (BE-II) dated 28.05.2018

H. *For procurement of Goods & Services which are divisible in nature, following shall be operated for **MSE bidders** under Public procurement (Preference to make in India), Order 2017 (revision) ;-*

a. If L1 bid is not from local Supplier and price quoted by MSE bidder falls within the margin of Purchase preference (L1+15% for MSEs), then 25 % of total order quantity of respective item (rounded off to nearest number) shall be awarded to MSE bidder, subject to MSE bidder matching the L1 Price. Out of Remaining 75% quantity, distribution shall be operated as per below sub-clause (2) -

b. If Local Supplier (Next to L1, other than MSE) quoted price falling within the Margin of Purchase Preference, and local supplier matches the L1 price, then 50% of remaining Quantity (after allocation of 25% to MSE) i.e. 37.5% shall be awarded to local supplier and 37.5% shall be awarded to Foreign bidder.

Note : L1 Price refers to lowest evaluated / landed cost to company.

For Further details, please refer GOI order no. P-45021 / 2 / 2017 - PP (BE-II) dated 28.05.2018.

26. NOTE.

a) Special conditions of enquiry, if enclosed by BHEL, will supersede the respective standard / general terms of enquiry.

b) Any other Standard terms and Conditions of the bidder attached / referred against the tender enquiry will be treated as null and void ab initio.

c) In order to protect the commercial interests of BHEL, it becomes necessary to take action against suppliers / contractors by way of supervision of business dealings, who either fail to perform or are in default without any reasonable cause, cause loss of business / money / reputation, indulged in malpractices, cheating, bribery, fraud or any other

misconducts or formation of cartel so as to influence the biding process or influence the price etc. Guide- lines for Suspension of Business Dealings with Suppliers / Contractors shall prevail over which is available at BHEL website http://www.bhel.com

d) The bidder along with its associate / collaborators / sub-contractors / sub-vendors / consultants / service providers shall strictly adhere to BHEL Fraud Prevention Policy displayed on BHEL website http://www.bhel.com and shall immediately bring to the notice of BHEL-Management about any fraud or suspected fraud as soon as it comes to their notice.

e) "BHEL shall recover the amount of compensation paid to victim(s) by BHEL towards loss of life / permanent disability due to an accident which is attributable to the negligence of contractor, agency or firm or any of its employees as detailed below;

1. **Victim:** Any person who suffers permanent disablement or dies in an accident as defined below.
2. **Accident:** Any death or permanent disability resulting solely and directly from any unintended and unforeseen injurious occurrence caused during the manufacturing / operation and works incidental thereto at BHEL factories/ **offices and precincts** thereof , project execution , erection and commissioning, services, repairs and maintenance, trouble shooting, serving , overhaul, renovation and retrofitting , trial operation, performance guarantee testing undertaken by the company or during any works / during working at BHEL Units/ Offices/ townships and premises/ project sites.
3. **Compensation in respect of each of the victims:**

(i) In the event of death or **permanent disability** resulting from **Loss of both limbs:** Rs. 10,00,000/-(Rs. Ten Lakh).

(ii) In the event of **other permanent disability**: Rs. 7,00,000/- (Rs. Seven Lakh).

4. Permanent Disablement: A disablement that is classified as a permanent total disablement under the proviso to Section 2(I) of the Employees Compensation Act, 1923."