DRG. NO. RD DG 4 35 0162 9000

FIRST ANGLE PROJECTION

(ALL DIMENSIONS ARE IN mm)

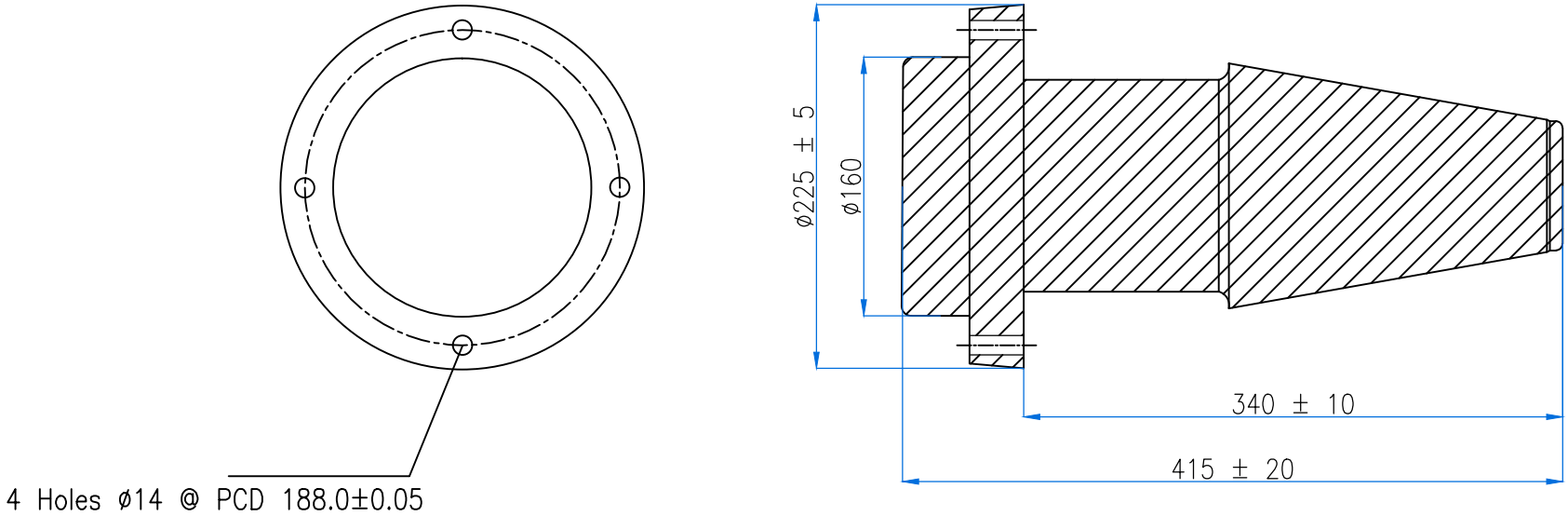

NOTE:

1. THE CABLE PLUG SHALL BE SUITABLE TO SOCKET DESIGNED AS PER IEC 62271-209
   SAMPLE DRAWING RD DG 3 35 0162 2000 ENCLOSED

VAR.00	REMARKS	VAR NO.	ITEM NO.	DESCRIPTION	STD	DRAWING NO.	IT.NO. / VAR	MATL. CODE / MATL. SPECN.	A C	UNIT	UNIT WT. / QTY.	GS	ZONE
			01										

TYPE OF PRODUCT: CGSM-145

NAME OF CUSTOMER

BHARAT HEAVY ELECTRICALS LTD.
HYDERABAD

	NAME	SIGN.	DATE	NO.OF VAR.
DRN	VSRP		30.05.20	01
CKD	AL		30.05.20	
APPD	MMRAO		30.05.20	

REV.	DATE	ALTERED / CHECKED	REV.	DATE	ALTERED / CHECKED
ZONE			ZONE		

DEPT. / CODE | GRADE OF TOL. DIM. C/M/F | SCALE: NTS | WEIGHT(KG): - | REF. TO: RD DG 4 35 0162 0000 | ITEM NO. 1 | NO.OF ITEMS

TITLE: CABLE PLUG

CARD CODE

DRAWING NO.: RD DG 4 35 0162 9000 | REV.

SHEET NO. | NO. OF SHEETS

REF. DRG. NO. | SIGN. AND DATE | INVENTORY NO.

THE INFORMATION ON THIS DOCUMENT IS THE PROPERTY OF BHARAT HEAVY ELECTRICALS LIMITED.
IT MUST NOT BE USED DIRECTLY OR INDIRECTLY IN ANY WAY DETRIMENTAL TO THE INTEREST OF THE COMPANY.