DRG. NO. RDDG435-0517-0021

FIRST ANGLE PROJECTION

(ALL DIMENSIONS ARE IN mm)

(~1.6)

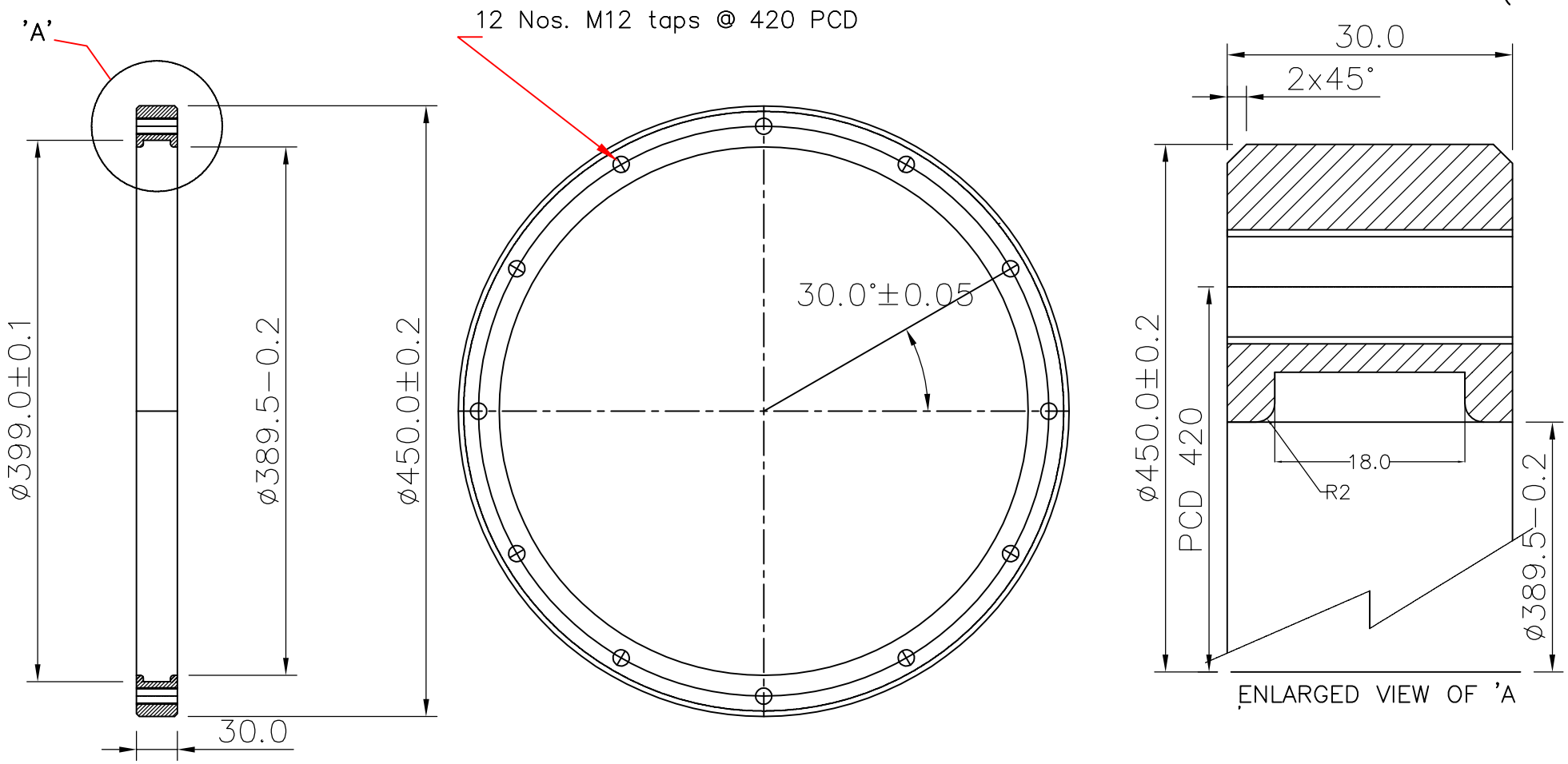

VAR.00	REMARKS	VAR NO.	ITEM NO.	DESCRIPTION	STD	DRAWING NO.	IT.NO. / VAR	MATL. CODE / MATL. SPECN.	A C	UNIT	UNIT WT. / QTY.	CS	ZONE
			02	LT INSERT		RDDG435-0519-021		HE-30			01		

TYPE OF PRODUCT

NAME OF CUSTOMER

CGSM-245

BHARAT HEAVY ELECTRICALS LTD.
HYDERABAD

	NAME	SIGN.	DATE	NO.OF VAR.
DRN	KSRAO		15.05.12	01
CKD	SA/NT		15.05.12	
APPD	MMRAO		15.05.12	

REV.	DATE	ALTERED / CHECKED	REV.	DATE	ALTERED / CHECKED
ZONE			ZONE		

DEPT. / CODE | GRADE OF TOL. DIM. C/M/F | SCALE NTS | WEIGHT(KG) | REF. TO RDDG435-0517-0024 | ITEM NO. 1 | NO.OF ITEMS

TITLE: LT INSERT

CARD CODE

DRAWING NO. RDDG435-0517-0021 | REV.

SHEET NO. | NO. OF SHEETS

THE INFORMATION ON THIS DOCUMENT IS THE PROPERTY OF BHARAT HEAVY ELECTRICALS LIMITED.
IT MUST NOT BE USED DIRECTLY OR INDIRECTLY IN ANY WAY DETRIMENTAL TO THE INTEREST OF THE COMPANY.

REF. DRG. NO. | SIGN. AND DATE | INVENTORY NO.