Maharatna Company
434-001/B
Dt: 15.07.16

DT: 27.01.2017

HOSTING DETAILS

Email offer send to: **tender_ cell@bheltry.co.in**

DESCRIPTION	REMARKS
Contact Person/Address	VIKAS VERMA.Engineer/Purchase/Valves
Approved By	G.SUBHASHINI. Sr. Manager/Purchase/Valves
Email	vikasverma@bheltry.co.in subhashini@bheltry.co.in
Telephone	0431 2577086/7210
Fax	Not applicable
Notification (Reference) NO.	EN-BPS2035 DT:25.01.2017
Tender Title	END COVERS
Tender Type	**BUY**/~~SERVICE CONTRACT/WORK CONTRACT~~
BRIEF DESCRIPTION	NON METALLIC END COVERS
Published in Newspaper	NA
Published On	-
Tender Value in Rs.	**-**
EMD Value – Rs.	Not applicable
Document Cost – Rs.	Not applicable
Date of Issue of Notification – DD/MM/YY	-
Date of Closure of Sale of Forms – DD/MM/YY	Not applicable
Completed Forms to be submitted by – DD/MM/YY	Not applicable
Date of Opening of Bids – DD/MM/YY	**06.02.2017**

Brief Details:

TYPE OF TENDER : OPEN TENDER
TENDER OPENING DATE : 30.01.2017
NUMBER OF BIDS : TWO PART BIDS
DELIVERY PERIOD : 4 weeks
LD : As Per BHEL LD Clause
Payment Terms : 100% payment after 45 days of acceptance of materials.
Delivery Terms : FOR BHEL (Stores), TRICHY-14

Tender forwarding Address:

ENQ.NO: EN-BPS2035 DUE DT: 30.01.2017

TENDER ROOM NO: 26,
BHEL, ADMIN 24 BLDG,
GROUND FLOOR,
BHEL, TRICHY-14
0431-2577742/7424

434-003/A
Dt.31.08.16

BHARAT HEAVY ELECTRICALS LIMITED

(A Government of India Undertaking)
HIGH PRESSURE BOILER PLANT
PURCHASE DEPARTMENT / VALVES
THIRUCHIRAPALLI - 620014
TAMILNADU (INDIA)

PHONE :91-431-2577305
GRAMS : BHARATELEC
FAX NO: 91-431-2520383
E-mail : valpur@bheltry.co.in
WEB : http://mm.bheltry.co.in

Vendor Code : 23505
Vendor Name :
M/S Open Tender Dummy Code

Enquiry No	Enquiry Date	Due Date for Quotation
EN-BPS2035	25.01.2017	30.01.2017

Please quote Enquiry No, Date and due date in all correspondences.
This is only a request for quotation and not an order

VIGILANCE AWARENESS WEEK
31st OCT - 05th NOV 2016
FOR VIGILANCE RELATED COMPLAINTS

Item	Description	Unit	Delivery Quantity	Schedule Date
	SUPPLY OF THE FOLLOWING ITEM(S) AS PER THE DRAWING(S)/STANDARD(S)/TDC GIVEN			
10	220710420000 2V137201767/01 END COVER-1372	NO	87.00	28.02.17
20	220710570000 2V138301767/01 END COVER-1383	NO	75.00	28.02.17
30	220710690000 2V221401767/01 END COVER-2214	NO	44.00	28.02.17
40	220735000000 4V590704866/02 END COVER-5907	NO	5,508.00	28.02.17
50	220744580000 TUBEENDCOVER INT DIA 12 BPS:6119-012-022	NO	248.00	28.02.17
60	220744600000 TUBE ENDCOVERINT DIA 18 BPS:6119-012-02 BPS:6119-0120-24 BPS DRAWING 6119-0120 REV 02 BPS CODE 6119-0120-24 PART NUMBER 22 074 460 0000	NO	800.00	28.02.17
70	220744610000 TUBEENDCOVER INT DIA 21	NO	1,375.00	28.02.17

The offers should reach us before the time of opening the tenders.
The offers will be opened at 14.30 hours on the due date in the presence of the tenderers who may like to be present .
Late tenders are liable to be rejected .

Yours faithfully,
For BHARAT HEAVY ELECTRICALS LIMITED

MANAGER / PURCHASE / VALVES

434-003/A

BHARAT HEAVY ELECTRICALS LIMITED

(A Government of India Undertaking)
HIGH PRESSURE BOILER PLANT
PURCHASE DEPARTMENT / VALVES
THIRUCHIRAPALLI - 620014
TAMILNADU (INDIA)

PHONE :91-431-2577305
GRAMS : BHARATELEC
FAX NO: 91-431-2520383
E-mail : valpur@bheltry.co.in
WEB : http://mm.bheltry.co.in

EN-BPS2035 / 25.01.2017 **23505**

	BPS:6119-012-025			
80	220744630000 TUBE END COVER INT DIA 27- BPS 6119-0120 BPS DRG-6119-0120	NO	1,000.00	28.02.17
90	220744660000 TUBEENDCOVER INT DIA 36 BPS:6119-012-030	NO	461.00	28.02.17
100	220744690000 TUBEENDCOVER INT DIA 45 BPS:6119-012-033	NO	292.00	28.02.17
110	220744740000 TUBE ENDCOVERINT DIA 60 BPS:6119-012-038	NO	80.00	28.02.17
120	964523540000 4V590004866/01 END COVER-5900	NO	1,185.00	28.02.17
130	964529380000 3V412707724/01 END COVER.21-1/4-4127	NO	70.00	28.02.17
140	964529430000 3V488107724/01 HBD END COVER-2-9/16--4881	NO	325.00	28.02.17
150	964529470000 3V425907724/01 END COVER 11-5M-4259	NO	200.00	28.02.17
160	964529570000 4V417107575/00 TUBE END COVER-4171	NO	50.00	28.02.17
170	964651780000 4VC76426558/00 END COVER-C764	NO	854.00	28.02.17

The offers should reach us before the time of opening the tenders.
The offers will be opened at 14.30 hours on the due date in the presence of the tenderers who may like to be present .
Late tenders are liable to be rejected .

Yours faithfully,
For BHARAT HEAVY ELECTRICALS LIMITED

MANAGER / PURCHASE / VALVES

434-003/A

BHARAT HEAVY ELECTRICALS LIMITED

(A Government of India Undertaking)
HIGH PRESSURE BOILER PLANT
PURCHASE DEPARTMENT / VALVES
THIRUCHIRAPALLI - 620014
TAMILNADU (INDIA)

PHONE :91-431-2577305
GRAMS : BHARATELEC
FAX NO: 91-431-2520383
E-mail : valpur@bheltry.co.in
WEB : http://mm.bheltry.co.in

EN-BPS2035 / 25.01.2017 **23505**

180	964699700000 2V413420264/00 END CAP FOR 3-1/8" FLANGE	NO	685.00	28.02.17
190	964699730000 END CAP FOR M10 GREASE NIPPLE SPC:-SPEC/OF/104/00	NO	1,013.00	28.02.17
200	964699730000 END CAP FOR M10 GREASE NIPPLE SPC:-SPEC/OF/104/00	NO	808.00	28.02.17
210	964699750000 2V459220267/00 END CAP FOR 2-9/16" FLANGE WITH SINGLE R	NO	354.00	28.02.17

General Note:

1)The offers are invited in two parts.

i)Part-I is bid covering the commercial terms and conditions.
ii)Part-II is price bid stating the price per unit in INR.
2)Commercial bid will be opened first.

3)Price bid will be opened only if the supplier is qualified Techno-commercially.

4)The price quoted should be kept valid for 120 DAYS from the date of tender opening.

5)LD shall be 0.5% of the undelivered portion per week of the delay or part thereof subject to a maximum of 10% of the total order value.

6)Annexure of the terms and conditions are enclosed.

7)Drawings are enclosed.

8)Delivery term should be strictly FOR/BHEL/Trichy (For indigenous suppliers) or CFR Chennai Port(For import suppliers).

9)Payment term should be 100% payment after 45 days on acceptance of the material at our stores.

The offers should reach us before the time of opening the tenders.
The offers will be opened at 14.30 hours on the due date in the presence of the tenderers who may like to be present .
Late tenders are liable to be rejected .

Yours faithfully,
For BHARAT HEAVY ELECTRICALS LIMITED

MANAGER / PURCHASE / VALVES

BHARAT HEAVY ELECTRICALS LIMITED

(A Government of India Undertaking)
HIGH PRESSURE BOILER PLANT
PURCHASE DEPARTMENT / VALVES
THIRUCHIRAPALLI - 620014
TAMILNADU (INDIA)

PHONE :91-431-2577305
GRAMS : BHARATELEC
FAX NO: 91-431-2520383
E-mail : valpur@bheltry.co.in
WEB : http://mm.bheltry.co.in

EN-BPS2035 / 25.01.2017 **23505**

10)The terms and conditions shall be strictly as per our enquiry only.

11)If any deviation is noticed against our enquiry terms and conditions ,your offer will be summarily rejected.

The bidder along with its associate/ collaborators/ sub-contractors/sub-vendors/ consultants/ service providers shall strictly adhere to BHEL fraud prevention policy displayed on BHEL website http://www.bhel.com and shall immediately bring to the notice of BHEL management about any fraud or suspected fraud as soon as it comes to their notice.

The offers should reach us before the time of opening the tenders.
The offers will be opened at 14.30 hours on the due date in the presence of the tenderers who may like to be present .
Late tenders are liable to be rejected .

Yours faithfully,
For BHARAT HEAVY ELECTRICALS LIMITED

MANAGER / PURCHASE / VALVES

BHARAT HEAVY ELECTRICALS LTD

Valves/Purchase, Tiruchirappalli-620014, INDIA

TERMS AND CONDITIONS

Phone: 0431 257 7210/7086 **Email:** vinu@bheltry.co.in
vikasverma@bheltry.co.in

1. QUOTATIONS:

a. **Submission of Tender:** Each offer should be sent in double cover separately and the same should be sealed and super scribed with correct Tender No., item of supply and due date of opening. Two or more quotations should not be sent in one cover. Price Bid should contain only Price in Rs per unit for each type. Tender must be strictly sent to the address given below and not in any individual's name.

Tender Opening Cell/Valves
Room No.26, Building-24, High Pressure Boiler Plant
Bharat Heavy Electricals Limited
Tiruchirappalli - 620 014, Tamil Nadu, India
Or
Email ID: tender_cell@bheltry.co.in

b. **Late tenders:** Late tenders shall not be considered under any circumstance.

c. **Regulations:** Tender should be accompanied by detailed technical literature, Catalogue and detailed dimensional drawings in ENGLISH. Tenders should be free from CORRECTION AND ERASURES. Corrections if any must be attested. All amounts shall be indicated both in words as well as figures. Where there is difference between amount quoted in words and figures, amount quoted in words shall prevail.

d. **Two Part Bid Systems:** Tender calls for two part bid system (Techno-Commercial & Price Bid), first the Techno-Commercial bid will be opened. Techno-commercially suitable vendors alone will be intimated for price bid opening or Reverse Auction.

e. **PVC**: Price Variation Clause is not acceptable. Prices should be firm.

f. **Catalogue:** Manufacturer's name, Trade Mark or Patent No. if any should be specified. Illustrative leaflets giving technical particulars are required along with quotation wherever necessary.

g. **Acceptance:** The purchaser shall be under no obligation to accept the lowest or any other tender and shall be entitled to accept or reject any tender in part or full without assigning any reason whatsoever.

h. **Samples:** Samples should be submitted separately if specially requested in tender before due date of the enquiry. They should be clearly marked with the enquiry number and date on the outside cover to facilitate identification.

i. **Spares:** The tenderer should quote separately for spares that are required for two years trouble free operation. The spares offer should accompany the offer of main equipment; otherwise the quotation will be overlooked.

j. **Authorised Dealership Certificate: Vendor must submit valid authorised dealership/stockist/distributor certificate from the original manufacturer of the bearings. Else, the offer shall be disqualified from further processing during part-1 bid evaluation.**

2. COMMERCIAL TERMS & CONDITIONS:

a. **Technical Terms:** All the items must be delivered strictly as per Drawing/TDC/Standards/Spec (As applicable). Shelf Life certificate must be given for all the applicable items.

b. **Terms of Payment:**

For Indigenous supplier: 100% after 45 days on satisfactory receipts and acceptance of material at BHEL stores/ Site acknowledgement.

Any deviation in the above payment terms will attract loading as mentioned below.

Base rate of SBI (As applicable on the date of bid opening. Commercial bid opening date in case of two part bids) + 6% shall be considered for loading for the period of relaxation sought by bidders.

LC will not be operated for indigenous vendors. Offers with payment terms as LC from Indigenous vendors will be rejected.

For Import supplier: 100% payment on CAD basis after 45 days from the date of receipt of documents, specified in PO, at BHEL's bank. Respective bank charges to respective account.

Any deviation in the above payment term will attract loading as "Base rate of SBI (as applicable on the date of bid opening. Commercial bid opening in case of two part bids) + 6% shall be considered for loading for the period of relaxation sought by bidders."

In the case of Usance LCs the loading will be considered @ 1.5% on the offered Value. For LC at sight the loading will be considered @ 3.5% on the offered Value.

Phone: 0431 257 7210/7086 **Email:** vinu@bheltry.co.in
vikasverma@bheltry.co.in

c. **Liquidated Damage:** Liquidated damages shall be 0.5% of the total order value or part thereof subject to a maximum of 10% of the total order value. For staggered delivery schedule, LD shall be 0.5% of the undelivered portion per week of the delay or part thereof subject to a maximum of 10% of the total order value.
Any deviation from the above LD clause, loading will be applied to the extent to which it is not agreed by the bidder (at offer value).

d. **Delivery Terms:**
Price should be quoted **FOR BHEL Trichy**/FOR site as mentioned in enquiry inclusive of freight and insurance in transit.

e. **Validity of Offer:** Prices should be valid for 120 days from the date of tender opening.

f. **Taxes & Duties:** If any Sales Tax is payable as extra to the quoted price, it should be specifically stated in quotation along with CST & T.N.G.S.T No. failing which the purchaser will not be liable for payment of Sales Tax. Our T.N.G.S.T No. 3550005 Dated 01-04-1995 C.S.T. No. 259383 Dt. 11.06.1991.

g. **Guarantee Clause:** The vendor shall give a guarantee for the performance of his supplies for a period of eighteen months from the date of dispatch or twelve months from the date of commissioning whichever is earlier.

h. **Risk Purchase:** Alternatively the purchaser at their option will be entitled to terminate the contract and to purchase elsewhere at the risk and cost of seller either the whole of goods or any part which the supplier has failed to deliver or dispatch within the time stipulated as aforesaid or if the same were not available, the best and the nearest available substitute therefore. Supplier shall be liable for any loss which the purchaser may sustain by reason for such risk purchases in addition to penalty at the rate mentioned in clause 2.b above.

i. **MODVAT/CREDIT:** If any Excise Duty is payable, the chapter head/sub-head reference and the rate of the duty should be quoted. If the tender is availing MODVAT credit for his input materials, the effect of proforma invoice should be passed on to the purchaser.

j. **Miscellaneous:** Any other conditions which might have been quoted by the seller and are in contravention to the terms prescribed, the order and which have not been specifically accepted in by Purchaser will not be applicable to the contract.

k. **Delivery: Delivery schedule shall be strictly within 4 weeks from the date of PO. Not complying with the aforesaid delivery period shall lead to rejection of the offer.**

l. **Special Provisions for Micro and Small Enterprises (MSE):**

i. 20% of the tendered quantity is earmarked for MSE suppliers in this tender.

ii. Out of the 20% tendered quantity reserved for MSE suppliers, 4% shall be earmarked for procurement from MSE owned by SC/ST entrepreneurs.

iii. In case MSE vendor participating in the tender quotes within the price band of LI +15%, they will be allowed to supply the portion of the requirement subject to acceptance of LI price by MSE vendor. In case of more than one such MSE, the supply shall be shared proportionately.

iv. MSE suppliers can avail the intended benefits only if they submit along with offer, attested copies of either EM II certificate having deemed validity (Two years from the date of issue of acknowledgement in EM II) or valid NSIC certificate or EM II certificate along with CA certificate applicable for the year, certifying quantum of investment in plant and machinery within the permissible limit as per the act for relevant status (Micro or small) where the deemed validity of EM II is over. Date to be reckoned for determining the deemed validity will be the last date of technical bid submission. Non submission of such documents will lead to consideration of their bids at par with other bidders and MSE status of such suppliers shall be shifted to Non MSE supplier till the supplier submits these documents.

3. GENERAL CONDITIONS:

a. BHEL reserves the right to finalize the tender as per item serial number wise or as a total package or project wise. Separate orders will be released for each project and documents should be supplied for each order separately.

b. BHEL shall have the right to visit vendor works during the execution of contract along with end customer for verifying status, inspection and testing of the material.

Phone: 0431 257 7210/7086 **Email:** vinu@bheltry.co.in
vikasverma@bheltry.co.in

c. BHEL reserves the right to negotiate or re-float the tender in case the quoted prices are not acceptable.
d. Supplier shall arrange packing to avoid lose or damages during Road Transport, Site handling & Storage.
e. Purchase Order, Item Serial Number, Material code, Quantity should marked the Packing clearly.
f. Confirmation for compliance is to be given in the offer for all the conditions specified above and to the respective Purchase Specification.
g. BHEL reserves the right to finalize the tender either through price bid opening or through Reverse Auction route.
h. BHEL reserves the right to reject the offer of a particular bidder due to unsatisfactory past performance in the execution of a contract at any of BHEL projects / units.
i. The Drawings and Technical documents given in this enquiry are the sole property of BHEL. This should not be modified, reproduced or misused in any form.

4. FRAUD PREVENTION POLICY:

The bidder along with its associate/collaborators/sub-contractors/sub-vendors/consultants/service providers shall strictly adhere to BHEL fraud prevention policy displayed on BHEL website http://www.bhel.com and shall immediately bring to the notice of the BHEL management about any fraud or suspected fraud as soon as it comes to their notice.

5. DOCUMENTATION

For Indigenous suppliers:

a. **With Consignment:** Duplicate for transporter copy of Invoice, Packing List, Delivery Challan, O&M manual, Material Test Certificate and other test Certificates if any, Calibration Report, Compliance Certificate & Guarantee/Warrantee Certificate etc.
b. **To Finance:**
Original and Duplicate Invoice for payment with GR reference, should be sent directly to

Sr Manager/Finance/Valves-Bills section
HPBP, BHELTiruchirappalli-620014, Tamil Nadu, India

To BHEL Purchase:
FOR BHEL TRICHY case: Copy of Invoice, Packing list, LWBand Delivery challan for reference, original IBR documents/Inspection despatch clearance certificates
FOR Site case: Original Excise Invoice, Original LWB, Original Packing List, Original IBR documents, Original despatch clearance Certificate, Original Inspection report, Test certificates as per PO, Original Site Acknowledgment etc.
c. **Identification:** Purchase Order, PO item serial number, Material code, Quantity, Unique Serial Number if any should be provided in all despatch documents, materials and packing clearly.

For Import suppliers:

a. **With Consignment:** O&M Manual and Packing List, Fumigation Certificates (In case of SEA shipment).
b. **To Bank:**
All Original Documents in Triplicate Bill of lading in case of SEA/Airway Bill in case of AIR consignment, the invoice indicating the Unit price & total price, Packing List contains quantity, net & gross weight, Packing dimensions, Certificate of Origin, all Inspection test certificates, Guarantee/warranty certificates are to be sent through supplier's banker to BHEL's banker.
To BHEL Purchase: One copy of above non-negotiable documents are to be sent to purchase department after dispatch of the materials to follow up with freight forwarder.
Identification: Purchase Order, PO item serial number, Material code, Quantity, Unique Serial Number if any should be provided in all despatch documents, materials and packing clearly.

Phone: 0431 257 7210/7086 **Email:** vinu@bheltry.co.in

vikasverma@bheltry.co.in

6. TENDER EVALUATION

Part-I Techno Commercial Bid:

- **a.** All vendors should submit General arrangement drawing, datasheet and C&I diagrams of the offered product if applicable.
- **b.** Point wise technical confirmation of all pages of our technical specifications and commercial conditions are required with your sign and seal along with commercial bid.
- **c.** Offers from supplier not having technical capability or not agreed for commercial terms, will be rejected.

Part-II Price Bid:

- **a.** Bidders qualified for part I will be intimated for participating in priced bid opening/Reverse Auction.
- **b.** L1 bidder will be decided based on landed cost for the equipment to BHEL.
- **c.** For evaluation, the exchange rate shall be taken as TT selling rate of SBI on date of Part-1 bid opening.

****

FIRST ANGLE PROJECTION (ALL DIMENSIONS IN MILLIMETRES)

DRAWING NO. 6119-0120

CAUTION THE INFORMATION ON THIS DOCUMENT IS THE PROPERTY OF BHARAT HEAVY ELECTRICALS LTD IT MUST NOT BE USED DIRECTLY OR INDIRECTLY IN ANY WAY DETRIMENTAL TO THE INTEREST OF THE COMPANY

05-228/C

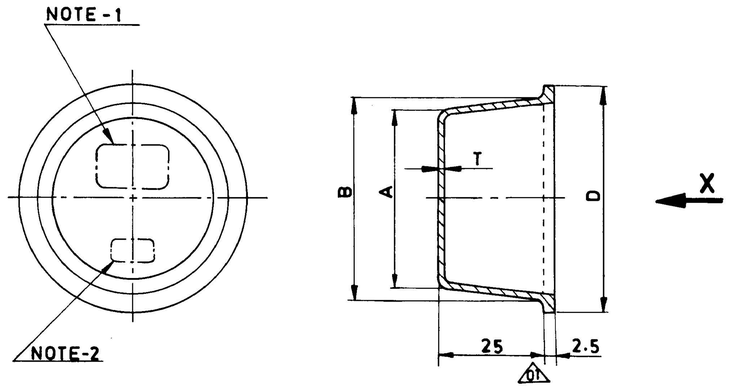

NOTE

1. STAMP THE EMBLEM ACCORDING TO AA 040 11 21 IN THE DIRECTION 'X'.
2. STAMP THE APPROPRIATE NOM SIZE IN THE DIRECTION 'X'.
3. MATERIAL : UREA FORMALDEHYDE CONFORMING TO IS:3389 OR POLYVINYL CHLORIDE (PVC) OR OTHER EQUIVALENT.
4. THE TUBE END COVERS SHALL BE FLEXIBLE TO FIT SNUGLY IN TO THE TUBE AND WITHSTAND SHOCK DURING TRANSIT OF THE TUBES.
5. THE TUBE END COVERS SHALL PREFERABLY BE OF DARK BLUE OR WHITE IN COLOUR OF VIRGIN QUALITY MATERIAL. (02)
6. THE CORNERS SHALL BE SUITABLY RADIUSED

EMBLEM SIZE	A	B	D	T	VARIANT NO.	ITEM NO.	DESCRIPTION	STD	BPS CODE	ITEM NO. / VAR NO.	MATL CODE / MATL SPEC	A/C	UNIT	UNIT WT / QTY	GS	ZONE
25	66	72	78	1.5	21		TUBE END COVER INT DIA 69		6119 0120 41		22 073 646			0.015		
25	63	69	75	1.5	20		TUBE END COVER INT DIA 66		6119 0120 40		22 074 476			0.014		
15	60	66	72	1.5	19		TUBE END COVER INT DIA 63		6119 0120 39		22 074 475			0.014		
15	57	63	69	1.5	18		TUBE END COVER INT DIA 60		6119 0120 38		22 074 474			0.013		
15	54	60	66	1.5	17		TUBE END COVER INT DIA 57		6119 0120 37		22 074 473			0.012		
15	51	57	63	1.5	16		TUBE END COVER INT DIA 54		6119 0120 36		22 074 472			0.012		
15	48	54	60	1.5	15		TUBE END COVER INT DIA 51		6119 0120 35		22 074 471			0.009		
15	45	51	57	1.5	14		TUBE END COVER INT DIA 48		6119 0120 34		22 074 470			0.008		
15	42	48	54	1.5	13		TUBE END COVER INT DIA 45		6119 0120 33		22 074 469			0.008		
-	39	45	51	1.5	12		TUBE END COVER INT DIA 42		6119 0120 32		22 074 468			0.007		
-	36	42	48	1.5	11		TUBE END COVER INT DIA 39		6119 0120 31		22 074 467			0.006		
-	33	39	45	1.5	10		TUBE END COVER INT DIA 36		6119 0120 30		22 074 466			0.006		
-	30	36	42	1.5	09		TUBE END COVER INT DIA 33		6119 0120 29		22 074 465			0.005		
-	27	33	39	1	08		TUBE END COVER INT DIA 30		6119 0120 28		22 074 464			0.004		
-	24	30	36	1	07		TUBE END COVER INT DIA 27		6119 0120 27		22 074 463			0.004		
-	21	27	33	1	06		TUBE END COVER INT DIA 24		6119 0120 26		22 074 462			0.004		
-	18	24	30	1	05		TUBE END COVER INT DIA 21		6119 0120 25		22 074 461			0.003		
-	15	21	27	1	04		TUBE END COVER INT DIA 18		6119 0120 24		22 074 460			0.002		
-	12	18	24	1	03		TUBE END COVER INT DIA 15		6119 0120 23		22 074 459			0.001		
-	9	15	21	1	02		TUBE END COVER INT DIA 12		6119 0120 22		22 074 458			0.001		
-	6	12	18	1	01		TUBE END COVER INT DIA 9		6119 0120 21		22 074 457			0.001		

REV	DATE	ALTERED	REV	DATE	ALTERED
02	01.07.93	CHECKED	01	31.3.83	CHECKED
ZONE C8	NOTE 5 ALTERED. LETTER REF. NO. MM:MPL:BPS:0764 DATED 18.06.93		ZONE E5 D5	EMBLEM SIZE 15 WAS 25 WIDTH SIZES REINTRODUCED.	

TYPE OF PRODUCT OR NAME OF CUSTOMER/PROJECT: [redacted]

Bharat Heavy Electricals Ltd.,
BOILER PLANT UNIT
TIRUCHIRAPALLI-620 014

	NAME	SIGN	DATE
DRN	G.D.N		1.9.82
CHD	T.K		
APPD	S.K		

NO. OF VAR

DEPT	GRADE OF UNTOL. DIM	SCALE	WEIGHT (kg)	REF TO ~~ASSY~~ / OLD DRG	ITEM NO.
SS	f/M/f	NTS	REFER UNIT Wt.	BPS 517501	
CODE 850					

TITLE: TUBE END COVER (INTERNAL TYPE)

CARD CODE: U 07

DRAWING NO. 6119-0120

REV 02

Size A2

DRAWING NO. 2-V-0000-20264

ALL DIMENSIONS ARE IN MILLIMETRES. FOR TOLERANCES OF UNTOLERANCED DIMENSIONS DURING MANUFACTURE REFER RELEVANT QCP / QP

SL No.	DRAWING NUMBER	FLANGE RATINGS	END CAP SIZE (mm)	MATERIAL SPECIFICATION	MATERIAL CODE	DIMENSIONS (mm) ØA	ØB	ØC	D		Wt / kg	REMARKS
01	2-V-4124-20264 /0	2-1/16" - 2M, 3M, 5M, 10M, 15M	50	LINEAR LOW DENSITY POLYETHYLENE (COLOUR : BLUE)	96 469 968 0000	122	56	43.4	14		0.001	
02	2-V-4592-20264 /0	2-9/16" - 2M, 3M, 5M, 10M, 15M	65		96 469 969 0000	144	69	62	16.3		0.002	
03	2-V-4134-20264 /0	3-1/8" - 2M, 3M, 5M, 10M, 15M	80		96 469 970 0000	159	83	73	16.5		0.003	
04	2-V-4778-20264 /0	4-1/16" - 2M, 3M, 5M, 10M, 15M	100		96 469 971 0000	192.5	105	97.6	15.3		0.005	
05	2-V-4L14-20264 /0	5-1/8" - 2M, 3M, 5M, 10M, 15M	130		96 469 972 0000	260	156	135	16		0.007	

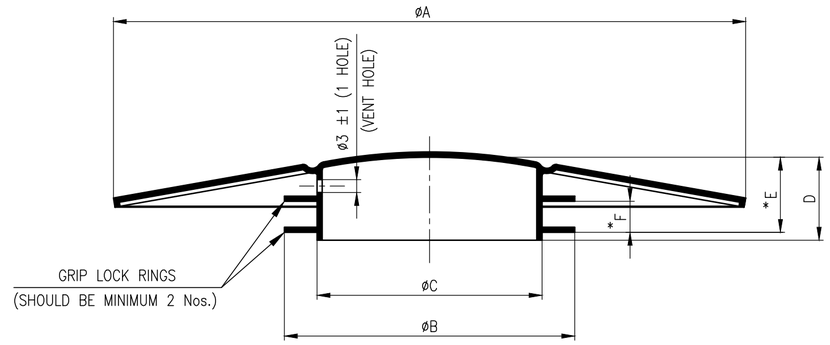

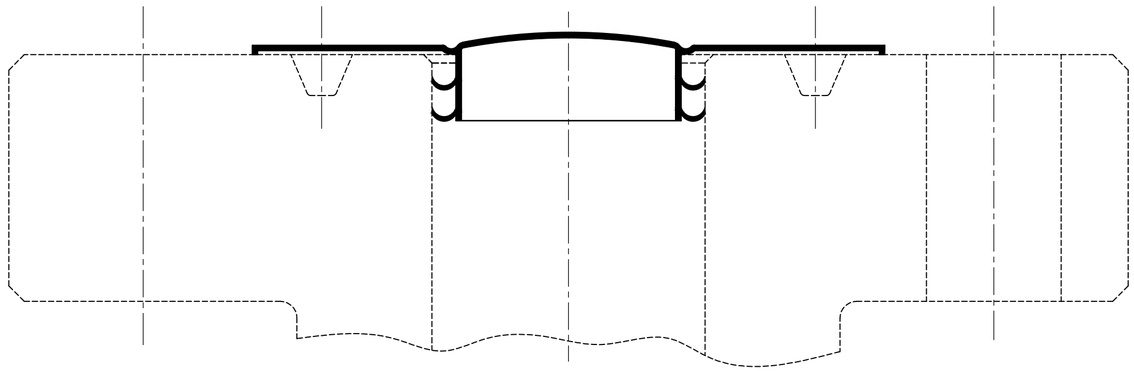

END CAP ASSY DETAILS

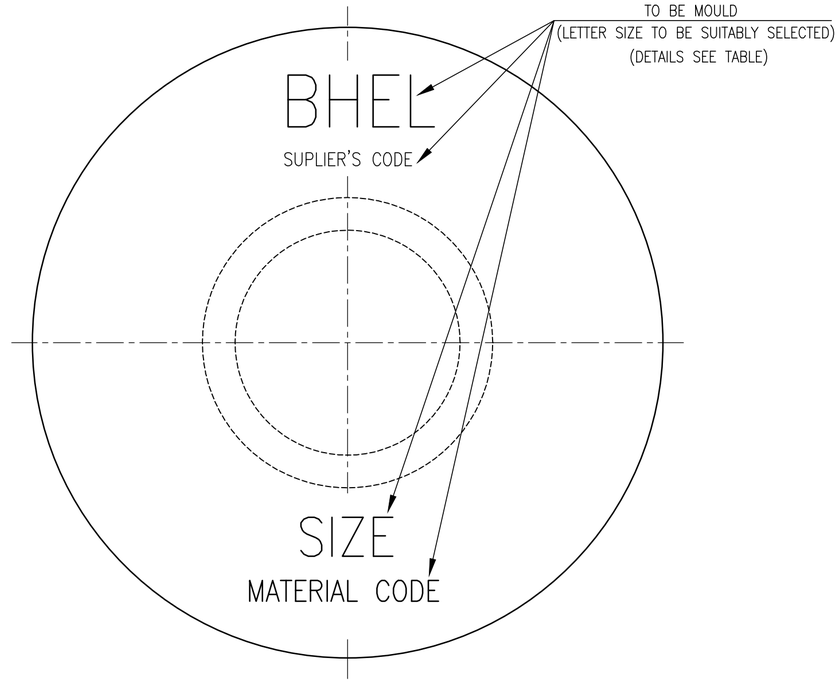

NOTES:

* 1. ALL OTHER DIMENSIONS & DETAILS (ie, THICKNESS, FINSHING, DIMN. E & F, RADIUS AND ANGLE) AS PER SUPPLIER'S SCOPE.

2. TEST CERTIFICATE FOR END COVERS SHOULD BE PROVIDED.

MINIMUM REQUIRED PROPERTIES :

PROPERTY	TEST METHOD	UNIT	TYPICAL VALUE
DENSITY (23°C)	ASTM D 1505	g/cc	0.926
MFI (190ø / 2.19kg)	ASTM D 1238	g/10 min	50
TENSILE YIELD STRENGTH	ASTM D 638	MPa	11.5
ELONGATION AT BREAK	ASTM D 638	%	600
FLEXURAL MODULUS	ASTM D 790	MPa	250
FLEXURAL MODULUS	ASTM D 1525	°C	97

APPLICATIONS :

END CAPS ARE USED TO PROTECT THE BODY SEALING GROOVE AREA FROM CONTAMINATIONS OF ENVIRONMENT.

DCP No.	ALTERED	APPD
	CHD	DATE
REV		
ZONE		

CAUTION: The information on this document is the property of BHARAT HEAVY ELECTRICALS LTD. It must not be used directly or indirectly in any way detrimental to the interest of the company.

No OFF	DESCRIPTION	MATL CODE	MATL SPECN	HEAT TREATMENT	SCRAP SORT	NET WT (kg)	GROSS WT (kg)	DRAWING No	ITEM No

TYPE OF PRODUCT OR NAME OF CUSTOMER/PROJECT: FOR OFE FLANGES

BHARAT HEAVY ELECTRICALS LTD., UNIT: HIGH PRESSURE BOILER PLANT. TIRUCHIRAPALLI -620014. 365-120

	NAME	SIGN	DATE	NO.OF VAR.
DRN	R.NATARAJAN	R.N	20-08-2016	
CHD	P.ARUNKUMAR	P.A	20-08-2016	
APPD	R.ELAYARAJA	R.E	20-08-2016	

DEPT VL CODE 340 | OFE | SCALE NTS | WEIGHT (KG). | REFERENCE INFORMATIONS ——— | NO. OF ITEMS

TITLE: FLANGE END CAP (PLASTIC) | CARD CODE U 01 | DRAWING NO. 2-V-0000-20264 | REV 0

Size A2

DRAWING NO. 2-V-0000-20267

ALL DIMENSIONS ARE IN MILLIMETRES. FOR TOLERANCES OF UNTOLERANCED DIMENSIONS DURING MANUFACTURE REFER RELEVANT QCP / QP

SL No.	DRAWING NUMBER	FLANGE RATINGS	END CAP SIZE (mm)	MATERIAL SPECIFICATION	MATERIAL CODE	DIMENSIONS (mm) ØA	ØB	ØC			Wt / kg	REMARKS
01	2-V-4124-20267 /0	2-1/16" - 2M, 3M, 5M, 10M, 15M	50	LINEAR LOW DENSITY POLYETHYLENE (COLOUR : BLUE)	96 469 974 0000	122	56	43.4			0.001	
02	2-V-4592-20267 /0	2-9/16" - 2M, 3M, 5M, 10M, 15M	65		96 469 975 0000	144	69	62			0.002	
03	2-V-4134-20267 /0	3-1/8" - 2M, 3M, 5M, 10M, 15M	80		96 469 976 0000	159	83	73			0.003	
04	2-V-4778-20267 /0	4-1/16" - 2M, 3M, 5M, 10M, 15M	100		96 469 977 0000	192.5	105	97.6			0.005	
05	2-V-4L14-20267 /0	5-1/8" - 2M, 3M, 5M, 10M, 15M	130		96 469 978 0000	260	156	135			0.007	

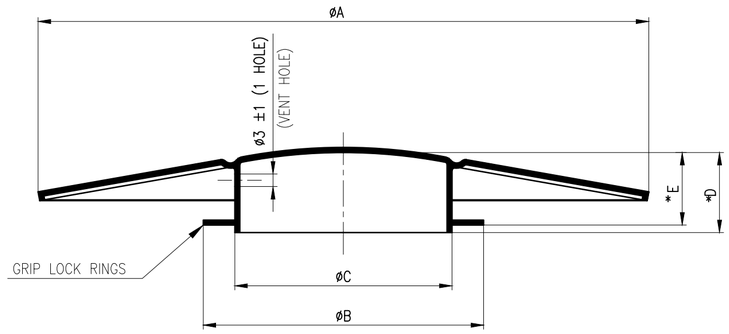

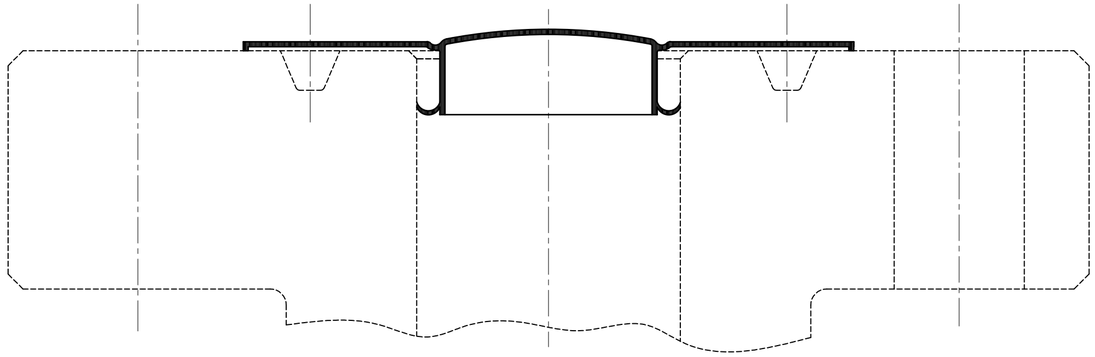

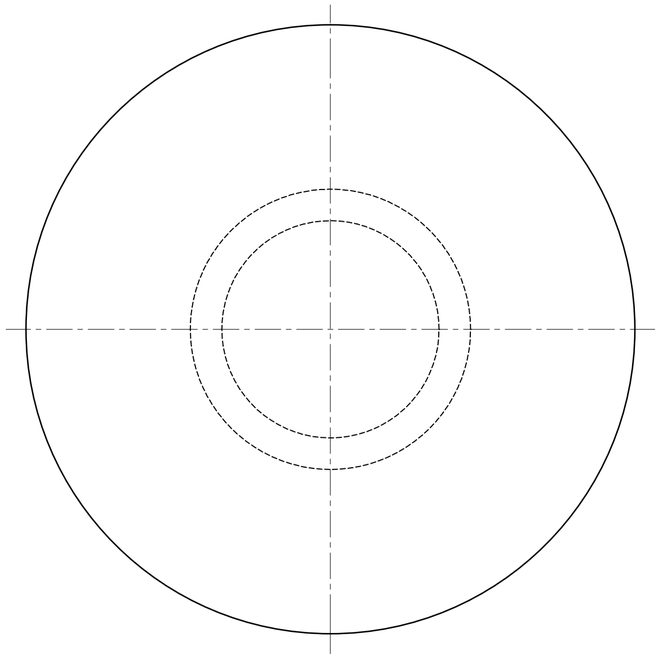

END CAP ASSY DETAILS

NOTES:

* 1. ALL OTHER DIMENSIONS & DETAILS (ie, THICKNESS, FINSHING, DIMANSIONS E & D, RADIUS AND ANGLE) AS PER SUPPLIER'S SCOPE.

2. TEST CERTIFICATE FOR END COVERS SHOULD BE PROVIDED.

MINIMUM REQUIRED PROPERTIES :

PROPERTY	TEST METHOD	UNIT	TYPICAL VALUE
DENSITY (23°C)	ASTM D 1505	g/cc	0.926
MFI (190ø / 2.19kg)	ASTM D 1238	g/10 min	50
TENSILE YIELD STRENGTH	ASTM D 638	MPa	11.5
ELONGATION AT BREAK	ASTM D 638	%	600
FLEXURAL MODULUS	ASTM D 790	MPa	250
FLEXURAL MODULUS	ASTM D 1525	°C	97

APPLICATIONS :

END CAPS ARE USED TO PROTECT THE BODY SEALING GROOVE AREA FROM CONTAMINATIONS OF ENVIRONMENT.

DCP No.	ALTERED	APPD
	CHD	DATE
REV		
ZONE		

CAUTION: The information on this document is the property of BHARAT HEAVY ELECTRICALS LTD. It must not be used directly or indirectly in any way detrimental to the interest of the company.

No OFF	DESCRIPTION	MATL CODE	MATL SPECN	HEAT TREATMENT	SCRAP SORT	NET WT (kg)	GROSS WT (kg)	DRAWING No	ITEM No

TYPE OF PRODUCT OR NAME OF CUSTOMER/PROJECT: FOR OFE FLANGES

BHARAT HEAVY ELECTRICALS LTD.,
UNIT: HIGH PRESSURE BOILER PLANT.
TIRUCHIRAPALLI -620014.
365-120

	NAME	SIGN	DATE	NO.OF VAR.
DRN	R.NATARAJAN	R.N	20-08-2016	
CHD	P.ARUNKUMAR	P.A	20-08-2016	
APPD	R.ELAYARAJA	R.E	20-08-2016	

DEPT VL
CODE 340
OFE
SCALE N T S
WEIGHT (KG).
REFERENCE INFORMATIONS ——
NO. OF ITEMS

TITLE: FLANGE END CAP (PLASTIC)
CARD CODE: U 01
DRAWING NO. 2-V-0000-20267
REV 0

Size A2

DRAWING NO. 2-V-0000-01767/04

ALL DIMENSIONS ARE IN MILLIMETRES. FOR TOLERANCES OF UNTOLERANCED DIMENSIONS DURING MANUFACTURE REFER RELEVANT QCP / QP

SL.No.	NP	NB	DRG.No.	DIMENSIONS φD	D1 PCD	t	nxθ°	NET WT (Kg)	MATL. CODE.
01	NP:10&16	100	2-V-1391-01767/1	215	180	3	4x90°	0.117	22071005
02		125	2-V-0103-01767/1	245	210	3	4x90°	0.153	22071006
03		150	2-V-1373-01767/1	SAME AS IN SL.No:-56					
04	NP 16	200	2-V-1394-01767/1	335	295	3	6x60°	0.286	22071008
05		250	2-V-1395-01767/1	405	355	3	6x60°	0.420	22071009
06		300	2-V-1317-01767/1	460	410	3	6x60°	0.542	22071010
07		400	2-V-1318-01767/1	580	525	6	8x45°	1.350	22071011
08		600	2-V-1209-01767/1	840	770	6	8x45°	2.850	22071012
09	NP:10,16&40	15	2-V-2301-01767/1	95	65	3	4x90°	0.021	22071013
10		20	2-V-2341-01767/1	105	75	3	4x90°	0.027	22071014
11		25	2-V-2302-01767/1	115	85	3	4x90°	0.032	22071015
12		32	2-V-2242-01767/1	135	100	3	4x90°	0.044	22071016
13		40	2-V-0203-01767/1	145	110	3	4x90°	0.051	22071017
14		50	2-V-0204-01767/1	160	125	3	4x90°	0.063	22071003
15		65	2-V-0205-01767/1	180	145	3	4x90°	0.080	22071018
16		80	2-V-1371-01767/1	SAME AS IN SL.No. 54					
17	NP 40	100	2-V-1372-01767/1	SAME AS IN SL.No:- 55					
18		125	2-V-2226-01767/1	SAME AS IN SL.No:- 41					
19		150	2-V-2411-01767/1	300	250	3	4x90°	0.226	22071021
20		200	2-V-2412-01767/1	375	320	3	6x60°	0.356	22071022
21		250	2-V-0181-01767/1	445	385	3	6x60°	0.503	22071023
22		300	2-V-0183-01767/1	510	450	3	8x45°	1.031	22071024
23		400	2-V-1217-01767/2	635	585	6	8x45°	1.709	22071025
24		500	2-V-1218-01767/1	755	670	6	8x45°	2.279	22071026
25	NP 64	50	2-V-0187-01767/1	175	135	3	4x90°	0.075	22071027
26		65	2-V-0188-01767/1	200	160	3	4x90°	0.100	22071064
27		80	2-V-1378-01767/1	SAME AS IN SL.No:-65					
28		100	2-V-0103-01767/1	SAME AS IN SL.No:-2					
29		150	2-V-0191-01767/1	340	280	3	4x90°	0.290	22071030
30		200	2-V-1395-01767/1	SAME AS IN SL.No:-5					
31		250	2-V-0182-01767/1	470	400	3	6x60°	0.560	22071032
32		300	2-V-0184-01767/1	530	460	3	8x45°	1.110	22071033
33	NP:64&100	15	2-V-2341-01767/1	SAME AS IN SL.No:-10					
34		20	2-V-2214-01767/1	SAME AS IN SL.No:-43					
35		25	2-V-2242-01767/1	SAME AS IN SL.No:-12					
36		32	2-V-1370-01767/1	SAME AS IN SL.No:-53					
37		40	2-V-1377-01767/1	SAME AS IN SL.No:-64					
38	NP 100	50	2-V-1371-01767/1	SAME AS IN SL.No:-54					
39		65	2-V-1391-01767/1	SAME AS IN SL.No:-1					
40		80	2-V-1372-01767/1	SAME AS IN SL.No:-55					
41		100	2-V-2226-01767/1	265	210	3	4x90°	0.173	22071038
42		150	2-V-0354-01767/1	350	290	3	6x60°	0.207	22071068
43	NP 250	15	2-V-2214-01767/1	125	90	3	4x90°	0.037	22071069
44		25	2-V-0203-01767/1	SAME AS IN SL.No:-13					
45		40	2-V-0205-01767/1	SAME AS IN SL.No:-15					
46		65	2-V-2225-01767/1	SAME AS IN SL.No:-55					
47		250	2-V-0347-01767/1	585	490	3	8x45°	1.328	22071039

SL.No.	NP	NB	DRG.No.	DIMENSIONS φD	D1 P.C.D	t	nxθ°	NET WT (Kg)	MATL. CODE.
48	NP 2.5	800	2-V-0112-01767/1	975	920	6	12x30°	3.864	22071001
49		1200	2-V-0113-01767/1	1375	1320	6	16x22½°	7.800	22071002
50	NP.6	300	2-V-0109-01767/1	435	395	3	6x60°	0.486	22071072
51	NP 2.5	200	2-V-0126-01767/1	360	310	3	6x60°	0.329	22071073
52		300	2-V-0127-01767/1	485	430	3	8x45°	0.602	22071074
53	150 LBS.	2"	2-V-1370-01767/1	152	121	3	4x90°	0.050	22071040
54		3"	2-V-1371-01767/1	190	152	3	4x90°	0.082	22071041
55		4"	2-V-1372-01767/1	229	190	3	4x90°	0.120	22071042
56		6"	2-V-1373-01767/1	279	241	3	4x90°	0.180	22071043
57		8"	2-V-0191-01767/1	SAME AS IN SL.No:-29					
58		10"	2-V-1395-01767/1	SAME AS IN SL.No:-5					
59		12"	2-V-1376-01767/1	483	432	3	6x60°	0.544	22071046
60		14"	2-V-1386-01767/1	533	476	6	6x60°	0.654	22071047
61		16"	2-V-1387-01767/1	597	540	6	8x45°	0.824	22071048
62		20"	2-V-1512-01767/1	695	635	6	10x36°	1.200	22071049
63		24"	2-V-1388-01767/1	813	749	6	10x36°	1.534	22071050
64	300 LBS.	2"	2-V-1377-01767/1	165	127	3	4x90°	0.061	22071051
65		3"	2-V-1378-01767/1	209	168	3	4x90°	0.098	22071052
66		4"	2-V-1379-01767/1	254	200	3	4x90°	0.147	22071053
67		6"	2-V-1380-01767/1	317	270	3	6x60°	0.232	22071054
68		8"	2-V-1381-01767/1	381	330	3	6x60°	0.336	22071055
69		10"	2-V-1382-01767/1	444	387	3	8x45°	0.457	22071056
70		12"	2-V-1383-01767/1	521	451	3	8x45°	0.630	22071057
71		14"	2-V-1384-01767/1	584	514	6	10x36°	0.784	22071058
72		1½"	2-V-1370-01767/1	SAME AS IN SL.No:-53					
73	NP: 10	300	2-V-0522-01767/1	440	400	3	6x60°	0.52	22071060
74		400	2-V-0537-01767/1	565	515	6	8x45°	1.31	22071061
75		500	2-V-0538-01767/1	670	620	6	10x36°	1.5	22071062
76		600	2-V-0539-01767/1	780	725	6	10x36°	1.7	22071063
77		800	2-V-0503-01767/1	1015	950	6	12x30°	2.5	22071075
78	150 C	26"	2-V-N834-01767/1	785	745	6	9x40°	1.7	22071076
79		28"	2-V-N847-01767/1	835	795	6	10x36°	1.9	22071077
80		30"	2-V-N848-01767/1	885	845	6	11x32.7°	2.1	22071078
81		32"	2-V-N827-01767/1	940	900	6	12x30°	2.3	22071079
82		36"	2-V-N988-01767/1	1170	1085	6	8x45°	3.5	22071080
83		36"	2-V-N846-01767	1055	1010	6	11x32.7°	2.7	22071081

DIMENSIONAL TOLERANCES
FOR O.D. UPTO ø500 $^{+0}_{-3}$
FOR O.D. ABOVE ø500 $^{+0}_{-5}$

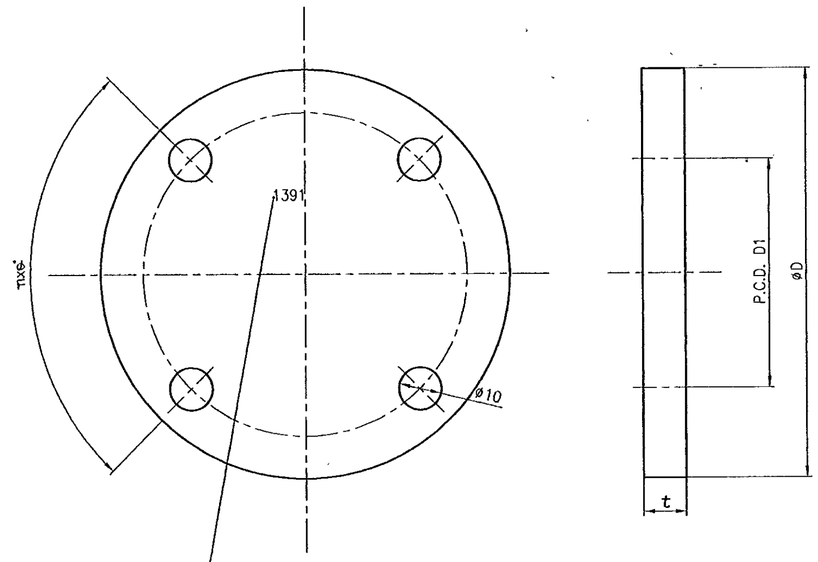

IDENTIFICATION MARK TO BE PAINTED ON THE SMOOTH SURFACE
(FOR EXAMPLE:"1391" FOR SL.No.1,DRG.No.2-V-1391-01767/1

MATL SPECN. STANDARD HARD BOARD IS.1658

No OFF	DESCRIPTION	MATL CODE	MATL SPECN	HEAT TREATMENT	SCRAP SORT	NET WT (kg)	GROSS WT (kg)	DRAWING No	ITEM No

TYPE OF PRODUCT OR NAME OF CUSTOMER/PROJECT — RETRACED WITH REV.4 ON 19.7.2000

BHARAT HEAVY ELECTRICALS LTD.,
UNIT: HIGH PRESSURE BOILER PLANT.
TIRUCHIRAPALLI-620014.
365-120

	NAME	SIGN	DATE	NO.OF VAR.
DRN	N.LIDIYA	N. Lidiya	19/7/2000	
CHD	R.L.NARAYANAN		19/7/2000	
APPD	M.RAJAKUMAR		19/07/2K	

DEPT V L
CODE 320
SCALE N T S
WEIGHT (KG).
REFERENCE INFORMATIONS: CAD REF:- C201767
NO. OF ITEMS

TITLE: END COVER
CARD CODE: U 01
DRAWING NO. 2-V-0000-01767
REV 04

REV	DATE	ALTERED
04	19.7.2K	CHD & APPD M.R.K.

ZONE
SL.NO.83 INCLUDED.
DIMS.CORRECTED FOR SL.NO.78 TO 82.
DCN NO.HM 0459

CAUTION: The information on this document is the property of BHARAT HEAVY ELECTRICALS LTD. It must not be used directly or indirectly in any way detrimental to the interest of the company.

Size A2

DRAWING NO. 3-V-0000-07724

ALL DIMENSIONS ARE IN MILLIMETRES. FOR TOLERANCES OF UNTOLERANCED DIMENSIONS DURING MANUFACTURE REFER RELEVANT QCP / QP.

SL No.	FLANGE RATINGS	DRAWING NUMBER	MATL. CODE	ø D	PCD	t	NET Wt (Kg)	SUPERSEDED DRG	BHEL PART No.
01	13 5/8" – 2000	SAME AS SERIAL NUMBER 05							
02	21 1/4" – 2000	3-V-4127-07724/01	96 452 938	813	724	6	3.42	VPS-001-9036	4127309
03	3 1/8" – 3000	SAME AS IN SERIAL NUMBER 09							
04	9" – 3000	SAME AS IN SERIAL NUMBER 19							
05	11" – 3000	3-V-4111-07724/01	96 452 939	546	470	6	1.55	VPS-002-9036	4111310
06	13 5/8" – 3000	3-V-4112-07724/01	96 452 940	610	534	6	1.92	VPS-003-9036	4112311
07	20 3/4" – 3000	3-V-4832-07724/01	96 452 941	858	750	6	3.81	VPS-004-9036	4832312
08	2 1/16" – 5000	3-V-4879-07724/01	96 452 942	216	165	3	0.12	VPS-005-9036	4879313
09	2 9/16" – 5000	3-V-4881-07724/01	96 452 943	245	191	3	0.15	VPS-006-9036	4881314
10	3 1/8" – 5000	3-V-4882-07724/01	96 452 944	267	203	3	0.18	VPS-007-9036	4882315
11	4 1/16" – 5000	3-V-4733-07724/01	96 452 945	312	242	3	0.25	VPS-008-9036	4733316
12	7 1/16" – 5000	3-V-4109-07724/01	96 452 946	394	318	6	0.40	VPS-009-9036	4109317
13	11" – 5000	3-V-4259-07724/01	96 452 947	585	483	6	1.77	VPS-010-9036	4259318
14	13 5/8" – 5000	3-V-4265-07724/01	96 452 948	673	591	6	2.35	VPS-011-9036	4265319
15	1 13/16" – 10000	3-V-4178-07724/01	96 452 949	188	146	3	0.09	VPS-012-9036	4178320
16	2 1/16" – 10000	SAME AS IN SERIAL NUMBER 08							
17	2 9/16" – 10000	SAME AS IN SERIAL NUMBER 09							
18	3 1/16" – 10000	SAME AS IN SERIAL NUMBER 10							
19	4 1/16" – 10000	SAME AS IN SERIAL NUMBER 11							
20	7 1/16" – 10000	3-V-4269-07724/01	96 452 950	480	404	6	0.59	VPS-013-9036	4269321
21	11" – 10000	SAME AS IN SERIAL NUMBER 14							
22	13 5/8" – 10000	3-V-4369-07724/01	96 452 951	769	673	6	3.00	VPS-014-9036	4369322
23	3 1/16" – 15000	3-V-4J71-07724/01	96 469 061	290	230	3	0.3	VPS-015-9036	4J71323

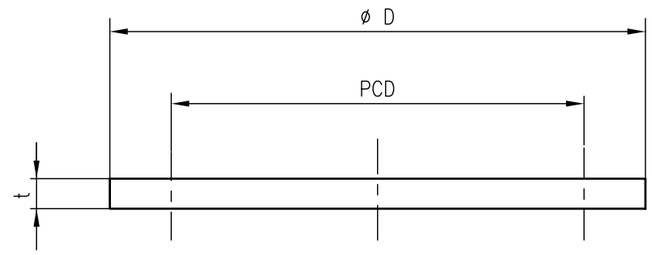

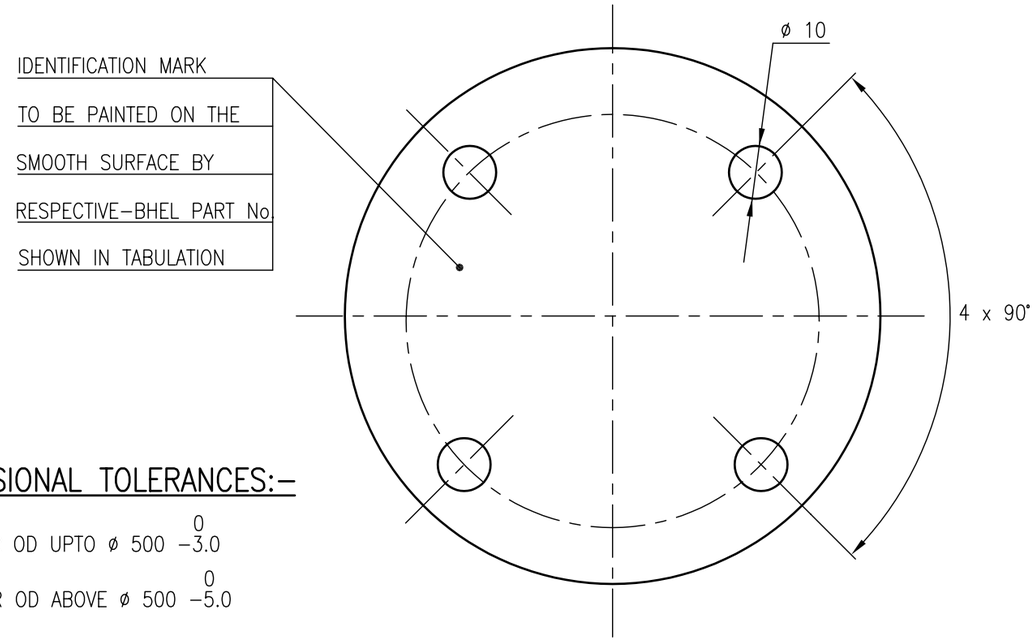

DIMENSIONAL TOLERANCES:-

1. FOR OD UPTO ø 500 $^{0}_{-3.0}$
2. FOR OD ABOVE ø 500 $^{0}_{-5.0}$

CAD REF No. o307724

No OFF	DESCRIPTION	MATL CODE	MATL SPECN	HEAT TREATMENT	SCRAP SORT	NET WT (kg)	GROSS WT (kg)	DRAWING No	ITEM No
			STANDARD HARD BORAD IS 1658						

TYPE OF PRODUCT
OR NAME OF
CUSTOMER/PROJECT

BHARAT HEAVY ELECTRICALS LTD.,
UNIT: HIGH PRESSURE BOILER PLANT.
TIRUCHIRAPALLI-620014.
365-121

	NAME	SIGN	DATE	NO.OF VAR.
DRN	T.RAJARAMAN	Rajaraman	27-6-05	
CHD	T.RAJARAMAN	Rajaraman	27-6-05	
APPD	V.ALAGARSWAMI	Alagarswami	27-6-05	

DEPT VL | CODE 340 | SCALE N T S | WEIGHT (KG). — | REFERENCE INFORMATIONS — | NO. OF ITEMS

TITLE: END COVER | CARD CODE U 01 | DRAWING NO. 3-V-0000-07724 | REV 02

DCP No.	ALTERED	APPD
—	CHD	DT. 27-6-05

REV. 02 — SL NO 23 ADDED.

ZONE 02

CAUTION: The information on this document is the property of BHARAT HEAVY ELECTRICALS LTD. It must not be used directly or indirectly in any way detrimental to the interest of the company.

© Size A3

ALL DIMENSIONS ARE IN MILLIMETRES.

FOR TOLERANCES OF UNTOLERANCED DIMENSIONS DURING MANUFACTURE REFER RELEVANT QCP/QP

REV	DATE	ALTERED	M.SRINIVASAN
03	31.03.08	CHD & APPD	P.BOOMINATHAN

DCP:800814

DRAWING CONVERTED INTO AUTOCAD

CAUTION: The information on this document is the property of BHARAT HEAVY ELECTRICALS LTD. It must not be used directly or indirectly in any way detrimental to the interest of the company.

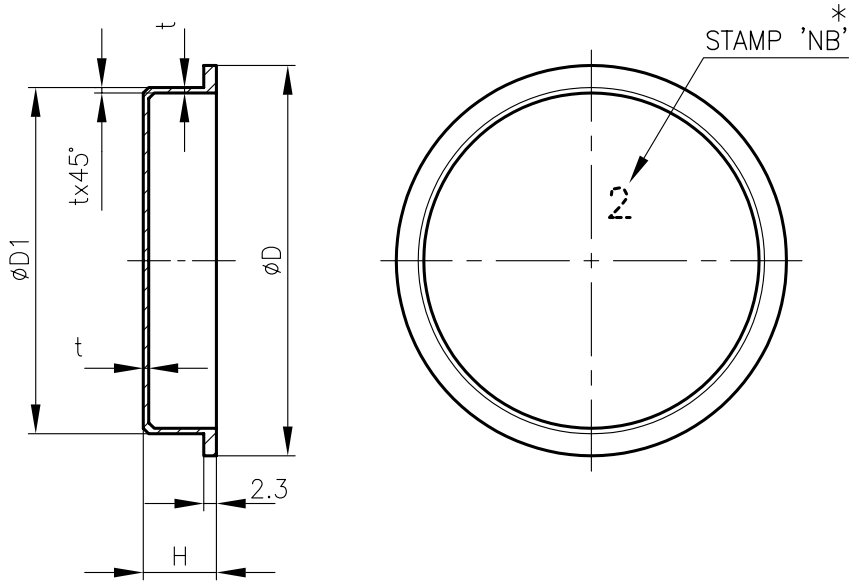

NOTES:

1. MATERIAL :- POLYETHYLENE-TYPE GCA IS: 3395-1965
2. COLOUR :- YELLOW
3. * DOTTED VALUE INDICATED FOR ILLUSTRATION ONLY. ACTUAL SIZE OF NORMAL BORE SHALL BE STAMPED HERE.

SL. No.	NB *	DRAWING NO.	øD	øD1 $^{+0.2}_{0}$	H	t (MIN)	COMPONENT CODE	Wt. (Gms.)
01	1/4"	4-V-5900-04866/01	20	15.30	6.5	0.65	96 452 354 0000	0.70
02	3/8"	4-V-5901-04866/01	27	18.50	6.5	0.65	22 073 495 0000	1.00
03	1/2"	4-V-5902-04866/01	31	22.80	6.5	0.65	22 073 496 0000	1.53
04	3/4"	4-V-5903-04866/01	37	28.10	11.0	1.00	22 073 497 0000	3.51
05	1"	4-V-5904-04866/01	43	34.80	11.0	1.00	22 073 498 0000	5.00
06	1 1/4"	4-V-5905-04866/01	52	43.60	11.0	1.00	96 452 146 0000	7.48
07	1 1/2"	4-V-5906-04866/01	58	49.60	11.0	1.00	22 073 499 0000	9.00
08	2"	4-V-5907-04866/01	71	62.10	11.0	1.00	22 073 500 0000	14.00
09	10	4-V-5731-04866/01	24	15.60	6.5	0.65	22 073 501 0000	0.8

NO OFF	DESCRIPTION	MATL CODE	MATL SPECN	HEAT TREATMENT	SCRAP SORT	NET WT (kg)	GROSS WT (kg)	DRAWING No	ITEM No

BHARAT HEAVY ELECTRICALS LTD.,
UNIT: HIGH PRESSURE BOILER PLANT.
TIRUCHIRAPALLI 620014.
365-122

	NAME	SIGN	DATE	NO.OF VAR
DRN	S.V.NATHAN		05.09.85	
CHD	G.V.RAMANI		10.09.85	
APPD	G.V.RAMANI		10.09.85	

DEPT	SCALE	WEIGHT (KG).	REFERENCE INFORMATIONS	NO. OF ITEMS
VL	NTS	REF. TABLE	CAD:F404866	
CODE 320				

TITLE	CARD CODE	DRAWING NO.	REV
END COVER	U 01	4-V-0000-04866	03

Size A4

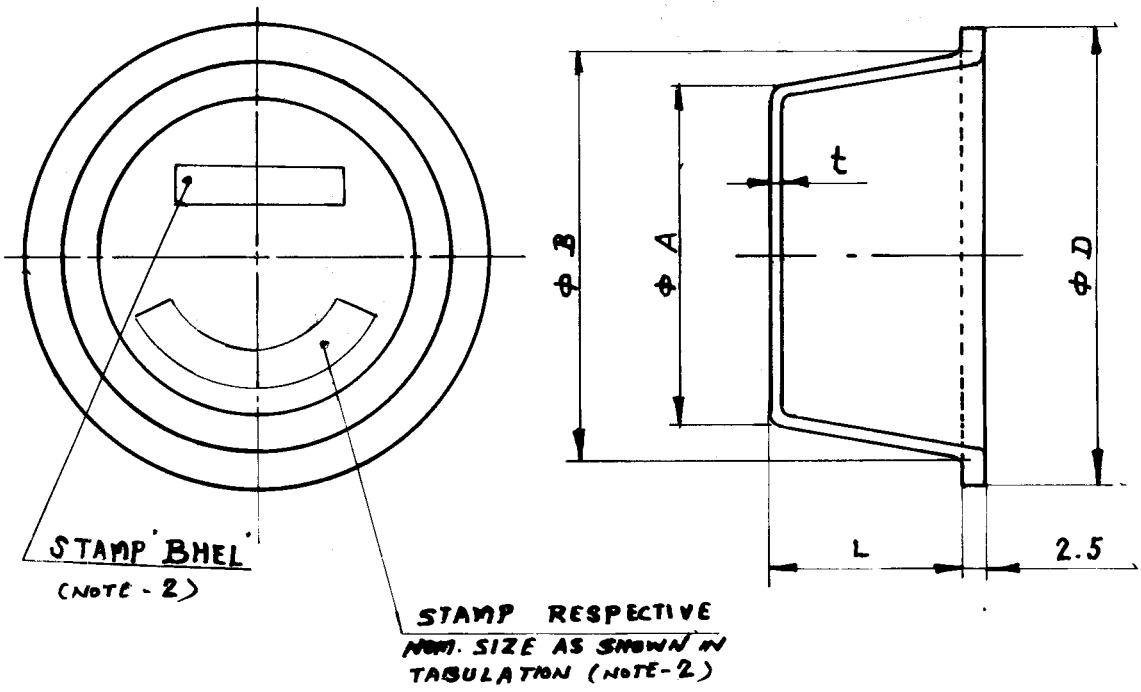

SL. NO:	DRG. NO:	NOM. SIZE	L	ϕA	ϕB	ϕD	t	EMBLEM SIZE.	FOR SIZE	MATL. CODE	ITEM NO:
01	4-V-4134-07575	86	30	82	90	96	2	25	3" LP.	96452 956	326
02	4-V-4171-07575	92.5	30	89	96	102	2	25	3½" UP	96452 957	327
03	4-V-4142.07575	110.5	30	107	114	120	2	25	4" LP	96 452 958	328
04	4-V-4177.07575	124	50	118	130	140	2	25	4½" IFRI	96 452 959	329
05	4-V-4271-07575	79	50	73	85	94	2	25	2⅞" UP	96 452 960	330
06	4-V-4359-07575	96.5	60	89	104	112	2	25	3½" NBO	96 452 961	331

NOTES :- 1. MATL :- UREA FORMALDEHYDE MOULDING MATL. CONFORMING TO IS : 3389-65 OR PVC OR OTHER EQUIVALENT.

2. MANUFACTURE AND WORKMANSHIP, DESIGNATION AND MARKING & ADDITIONAL INFORMATION FOR PURCHASE SHALL BE ACCORDING TO BPS : 517501-7301.

NOTE-1

NO. OF PIECES	NAME - DIMENSIONS	SEMI - PRODUCT	FINAL MATERIAL	INITIAL MATERIAL	SCRAP SORT	NET Wt (kg)	GROSS Wt (kg)	DRAWING NO.	ITEM NO.

REMARKS

TOTAL NET Wt (kg)

SCALE				ALTERATIONS	DATE	SIGNATURE	ALTERATION INDEX
NTS	DRAWN	5.10.88					
	CHECKED	5/10/88					
	APPROVED		TRANS. COPY NO.				
	STDS. OFFICER	5/10/88					
	DATE						

TYPE	GROUP	OLD DRG.	NEW DRG

TITLE: TUBE END COVER

DRAWING NO. 4-V-0000-07575

33-116

CORPORATE DRG ID
TP-DG-4-V-0000-07575

TP-DG-4-V-0000-26558
CORPORATE DRG ID

ALL DIMENSIONS ARE IN MILLIMETRES.
FOR TOLERANCES OF UNTOLERANCED DIMENSIONS DURING MANUFACTURE REFER RELEVANT QCP/QP

REV	DATE	ALTERED
		CHD & APPD

CAUTION: The information on this document is the property of BHARAT HEAVY ELECTRICALS LTD. It must not be used directly or indirectly in any way detrimental to the interest of the company.

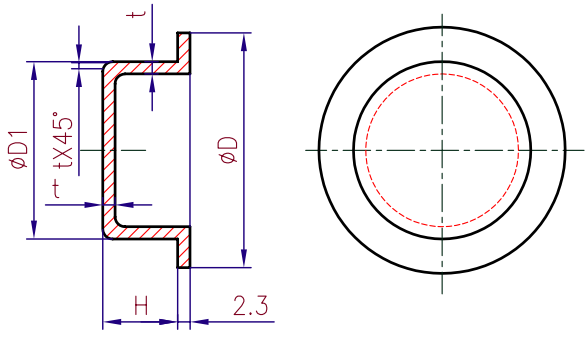

NOTES:

01. MATERAL:-POLYETHYLENE-TYPE GCA IS:3395-1965

02. COLOUR:-YELLOW

SL NO.	DRAWING NO.	øD	øD1	H	t (min)	COMP.CODE	Wt (Kg)
01	4-V-C764-26558	ø27	$18.7^{+0.2}_{0}$	6.5	0.65	96 465 178	0.01

NO OFF	DESCRIPTION	MATL CODE	MATL SPECN	HEAT TREATMENT	SCRAP SORT	NET WT (kg)	GROSS WT (kg)	DRAWING No	ITEM No

BHARAT HEAVY ELECTRICALS LTD.,
UNIT: HIGH PRESSURE BOILER PLANT.
TIRUCHIRAPALLI 620014.

	NAME	SIGN	DATE
DRN	V.BAIRAVAN		16.03.05
CHD	R.L.N		16.03.05
APPD	M.RAJAKUMAR		16.03.05

NO. OF VAR

DEPT	SCALE	WEIGHT (KG).	REFERENCE INFORMATIONS	NO. OF ITEMS
VL	N T S	0.01	CAD REFER:C426558	
CODE 320				

TITLE	CARD CODE	DRAWING NO.	REV
END COVER	U 01	4-V-0000-26558	

Size A4

TP-DG-4-V-0000-26558
CORPORATE DRG ID

Bharat Heavy Electricals Ltd.

Valves Purchase
Trichy - 620 014. India

BHEL Enquiry EN-SSB1407

Sl No	**BHEL COMMERCIAL TERMS AND CONDITIONS** for **INDIGENOUS SUPPLIES**	Vendor's Confirmation
1	Vendor should give confirmation to BHEL's Technical Specification. Any deviations from the specification are to be furnished separately as "Schedule of Deviation". If there is no deviation vendor should indicate "No Deviation".	
2	Vendor to indicate Quoted/Not Quoted item wise.	
3	**Prices** shall be **quoted item wise** only.	
4	Prices shall be quoted on **"FIRM PRICE"** basis only. The prices should be only on **FOR Trichy basis** inclusive of Packing & Forwarding charges if any.	
5	**Validity of offer** shall be 4 months from the date of tender opening.	
6	**Delivery** should be 4 weeks from the date of purchase order	
7	**Liquidated damages** @0.5% of the undelivered portion per week of the delay or part thereof subject to a maximum of 10% of the total order value.	
8	**Following Risk Purchase clause** shall be applicable: The Purchaser at his option will be entitled to terminate the contract and to purchase elsewhere at the risk and cost of the seller either the whole of the goods or any part which the supplier has failed to deliver or dispatch within the time stipulated or if the same were not available, the best and the nearest available substitute therefore. The supplier shall be liable for any loss which the Purchaser may sustain by reason of such risk purchases.	
9	**Payment terms** 100% after 45 days on acceptance of materials at BHEL stores, Trichy	
10	Excise duty, sales tax and other levies (if any) shall be indicated as extra in the offer.	
11	Any warranty replacement during warranty period shall be supplied free of charge on FOR Site basis/destination specified by BHEL	
12	The vendor shall provide necessary drawings, Test Certificates and Operating Maintenance Manuals as called for in the Technical Specification, in the required number of copies at no extra cost.	

NOTE:-

a) It is confirmed that all the terms and conditions stipulated in the Enquiry have been fully understood by us and all clarifications & details have been obtained.

b) Your specific acceptances to BHEL Payment terms, LD and Risk Purchase Clause are essential for consideration of your offer. Other wise your offer is liable for rejection.

Signature & Office Seal of the vendor