FIRST ANGLE PROJECTION

(ALL DIMENSIONS ARE IN mm)

DRG. NO. 24303192076

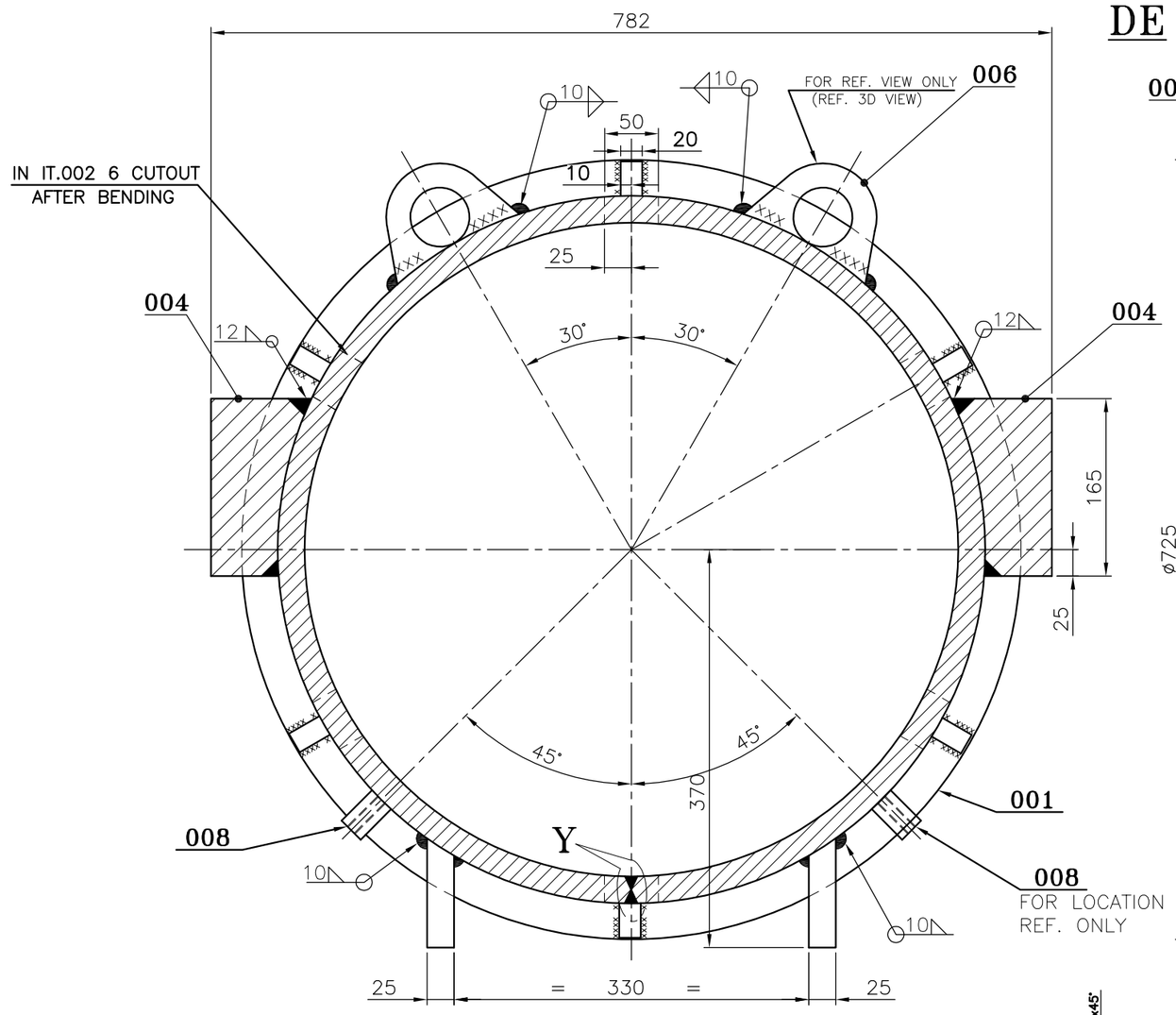

SECTION–AA

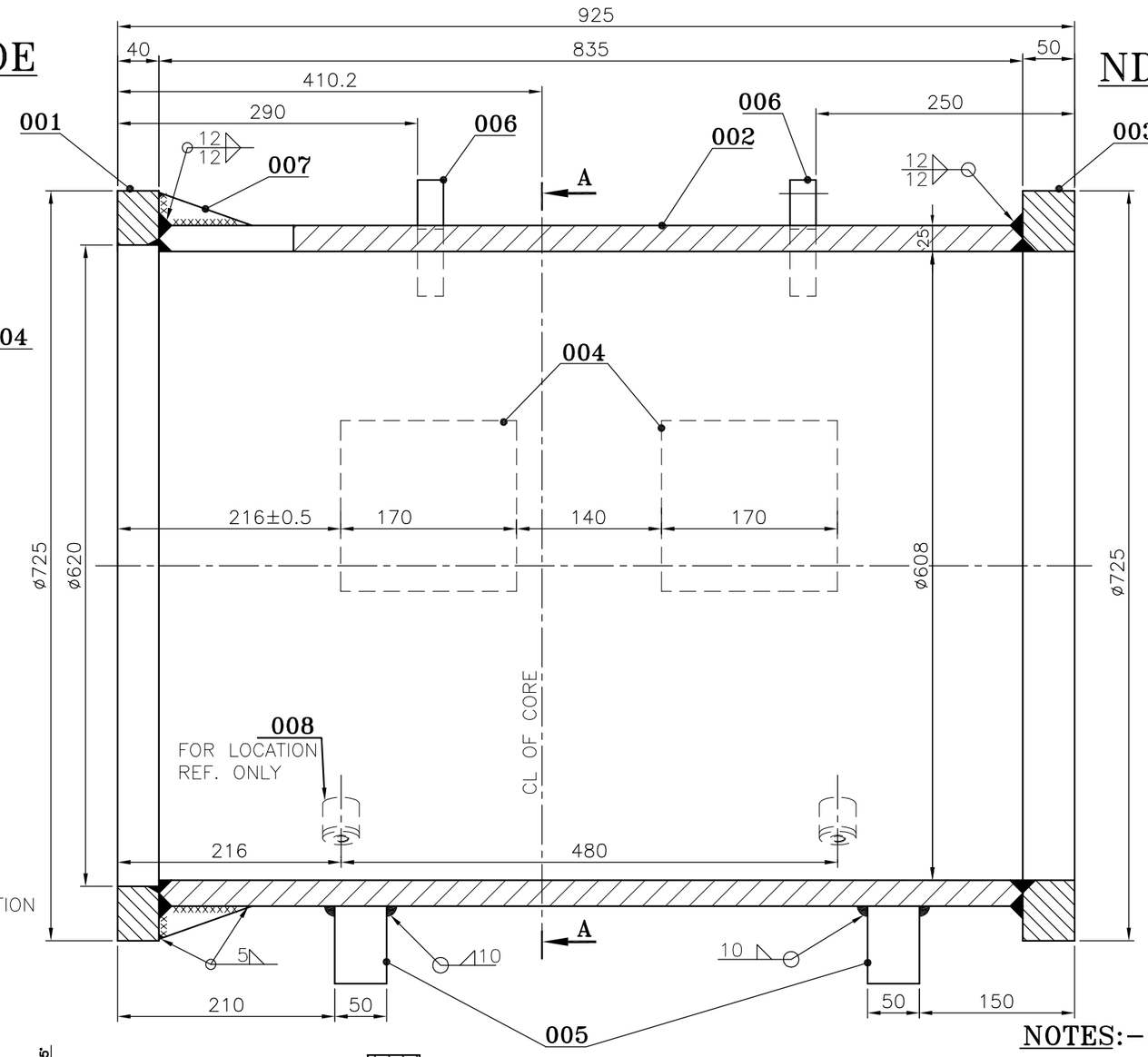

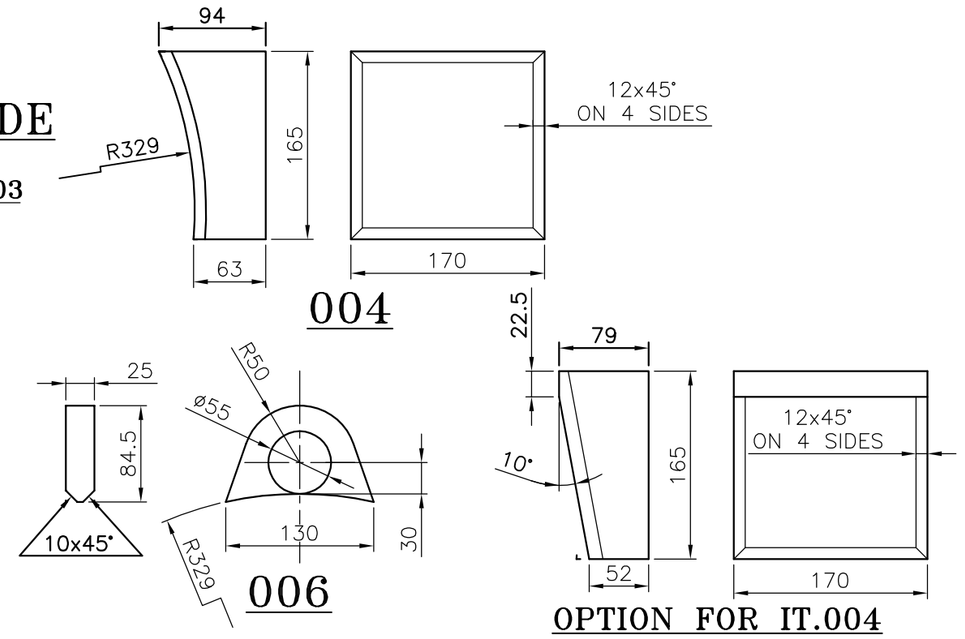

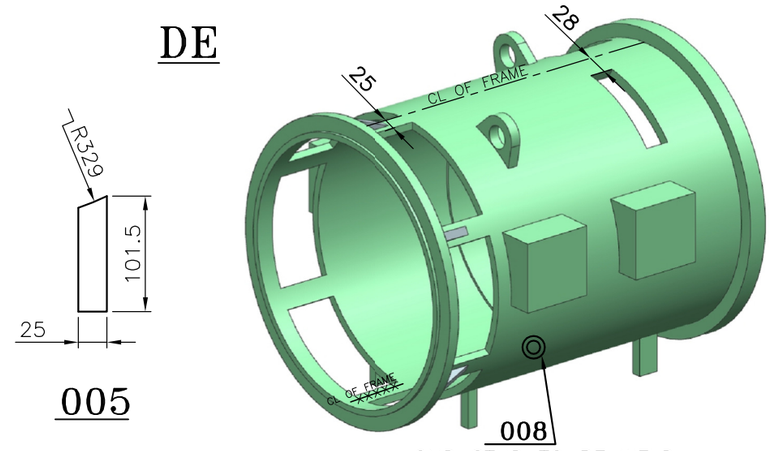

3D VIEW (FOR REF. ONLY)

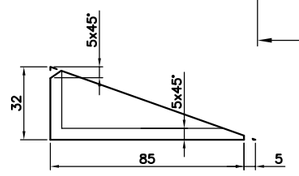

007

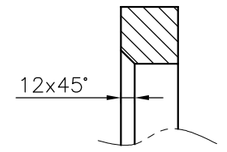

CHAMFER DETAIL OF ITS 001 & 003

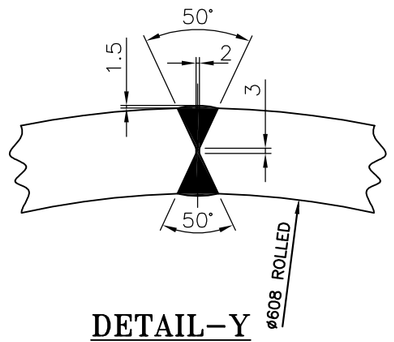

DETAIL–Y

(ROLLED DETAIL OF ITS. 002 & 003)

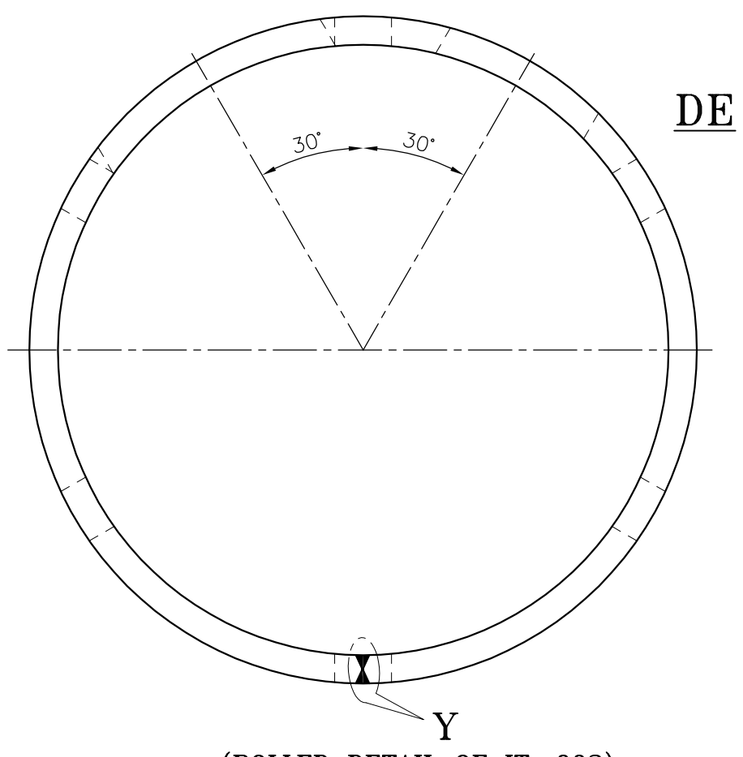

(ROLLED DETAIL OF IT. 002)

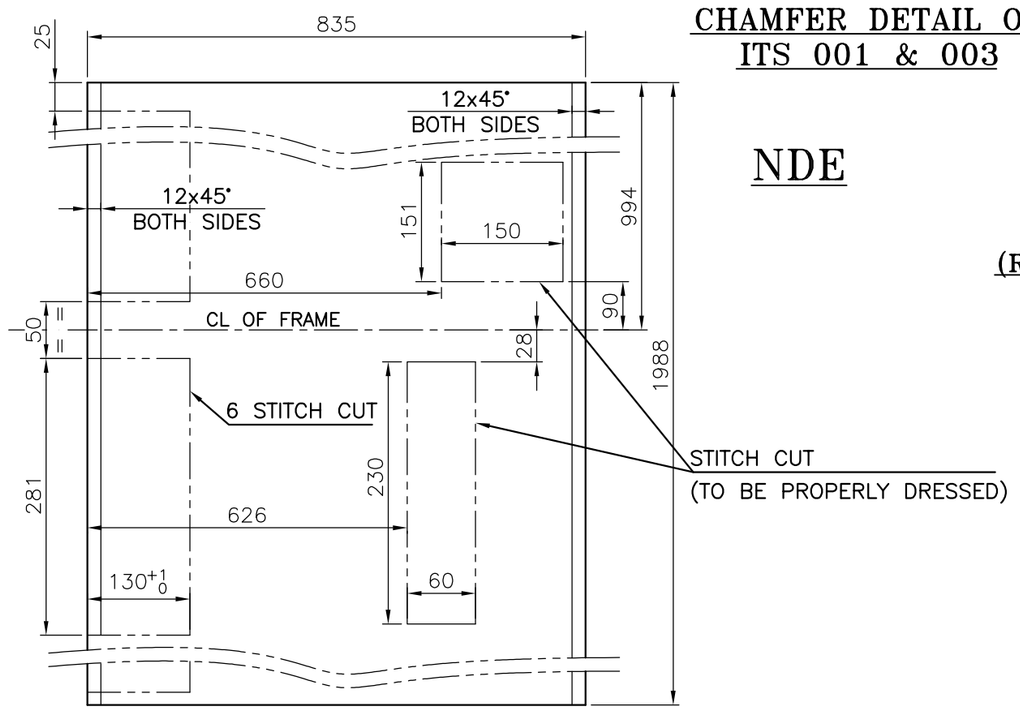

(DEVELOPMENT VIEW OF IT.002)

002

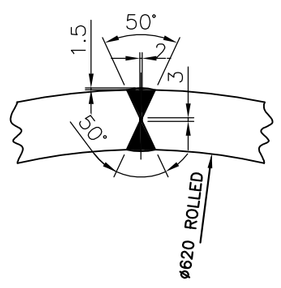

(ROLLED DETAIL OF IT. 001)

NOTES:–

1. IMPORTANT:– ALL WELDED JOINTS TO BE DRESSED SUCH THAT NO WELDING MATERIAL APPEAR ON THE SURFACE. SURFACE SHOULD BE SMOOTH.
2. CORNERS OF ITEM 002 MUST BE FLUSH WITH O/D OF ITEM 001.
3. ALL WELDS TO BE GR II OF CORPORATE STD. AA0622101.
4. STRESS RELIEVE AS PER PROCESS SPEC. NO. BP0640299.
5. FRAME TO BE EPOXY PRIMER NO. AA56105 COATED TO PR SPEC. NO. TM94217, QTY. OF PRIMER 1 LITRE.
6. STANDARD TOLERANCE OF OPEN DIMNS. AS PER AA0621104 GR.B & AA0621105 GR.E.
7. FOR PARTS GAS CUT OR CUT BY ANY OTHER METHOD CORP. STD. AA0621101 TABLE 2 & 3 TO BE FOLLOWED.
8. STATOR FRAME TO BE SAND/ SHOT BLASTED.

VAR 00	REMARKS	VAR. NO.	ITEM NO.	DESCRIPTION	STD	DRAWING NO.	IT.NO. / VAR.	MATL. CODE / MATL. SPCN.	A / C	UNIT	UNIT WT. / QTY.	GS	ZONE
002			008	EARTHING STUD		44303192078	001			KG.	0.12		
006			007	RIB 20THK.x32x90				AA10119		KG.	0.225		
002			006	LUG 25THK.x85x130				AA10119		KG.	1.0		
004			005	FEET 25THK.x50x103				AA10119		KG.	1.00		
004	RAW WT. –22.01		004	PAD 100THK.x165x170				AA10119		KG.	15.5		
001			003	END RING 60TK.x60x2098				AA10119		KG.	59.3		
001	RAW WT. –325.8		002	TUBE 25THK.x835x1988				AA10119		KG.	276.0		
001			001	END RING 56TK.x40x2112				AA10119		KG.	37.13		

ADDITIONAL INFORMATION REF. DRG. NO.

STATUS OF DRAWING

DISTRIBUTION OF PRINTS
TME –1 TNX –1
TAM –3

TYPE OF PRODUCT OR NAME OF CUSTOMER/PROJECT: TA4502AZ

BHARAT HEAVY ELECTRICALS LTD. BHOPAL

	NAME	SIGN	DATE	NO. OF VAR.
DRN.	A.JHARIA		08.10.18	
CKD.	R.CHAUDHARY		08.10.18	
APPD.	R.CHAUDHARY		08.10.18	

DEPT.	UNTOL. DIMS. GR. 'M'	SCALE	WEIGHT (K.G.)	REF. TO ASSY. DRG.	ITEM NO.	NO. OF ITEM
TME	AA0230208	NTS	442.0	24303192077	001	008
CODE 405						

TITLE: STATOR FRAME (FABRICATED)

DRAWING NO. 24303192076 REV. 03

SHT. NO. 01 NO. OF SHT. 01

REV.	DATE	ALTERED / CHECKED / APPROVED	ZONE
03	14.03.19	ALTERED A.JHARIA; CHECKED K.D.; APPROVED RAHUL	IT. 008 ADDED & DRG. UPDATED.
02	30.10.18	ALTERED A.JHARIA; CHECKED RAHUL; APPROVED RAHUL	OPTION ADDED FOR IT.004.
01	12.10.18	ALTERED A.JHARIA; CHECKED RAHUL; APPROVED RAHUL	IN IT.002 DIM. 626 ADDED. IT. 007 ADDED. 3D VIEW UPDATED.

THE INFORMATION ON THIS DOCUMENT IS THE PROPERTY OF BHARAT HEAVY ELECTRICALS LIMITED. IT MUST NOT BE USED DIRECTLY OR INDIRECTLY IN ANY WAY DETRIMENTAL TO THE INTEREST OF THE COMPANY.

A2