FIRST ANGLE PRJECTION

ALL DIMENSIONS ARE IN MM

DRAWING NO. 3-16503-40901

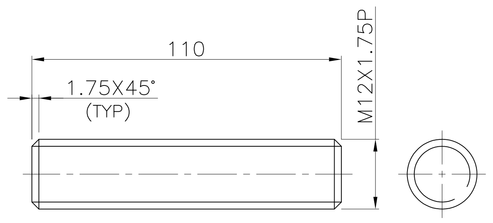

DETAIL OF ITEM NO. 114

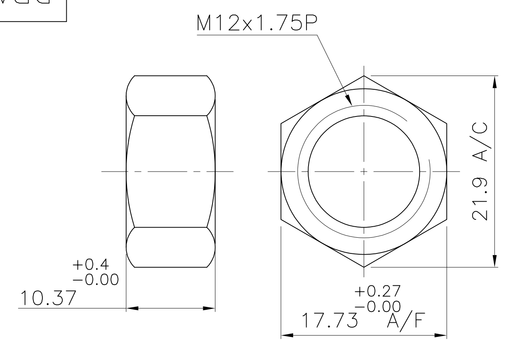

DETAIL OF ITEM NO. 115

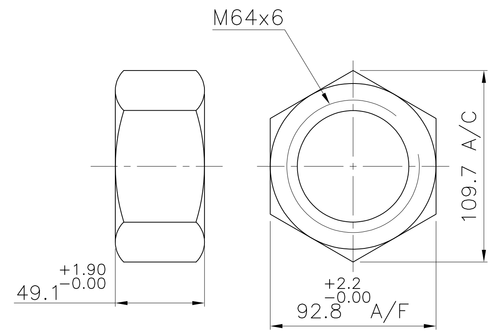

DETAIL OF ITEM NO. 118

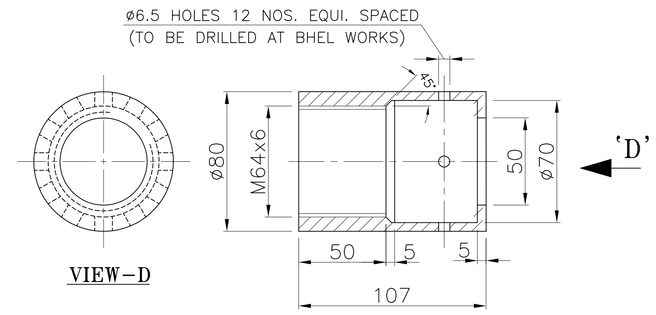

DETAIL OF ITEM NO. 119

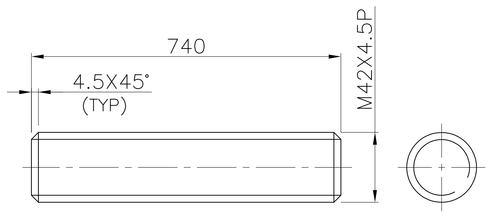

DETAIL OF ITEM NO. 814

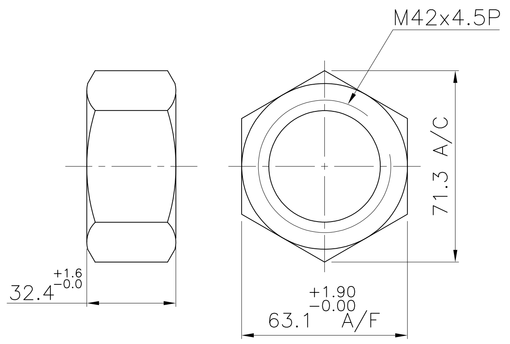

DETAIL OF ITEM NO. 815

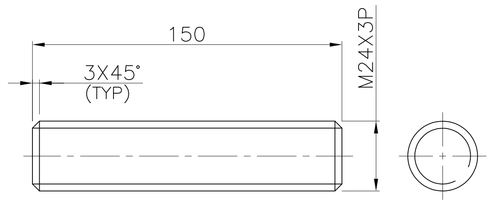

DETAIL OF ITEM NO. 816

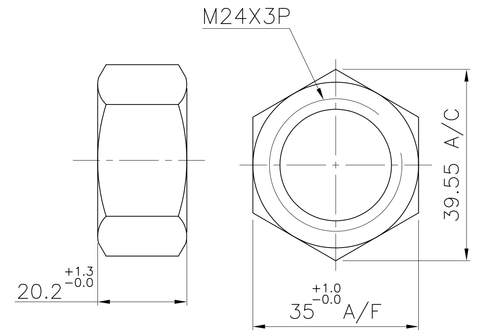

DETAIL OF ITEM NO. 817

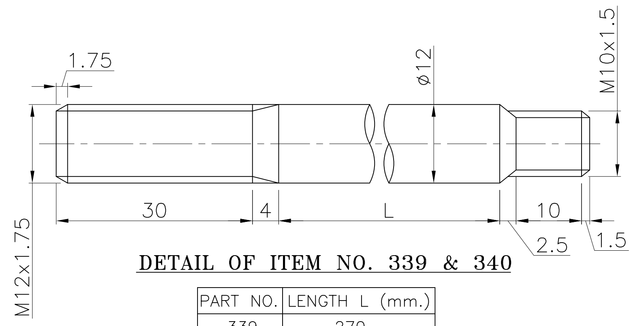

DETAIL OF ITEM NO. 339 & 340

PART NO.	LENGTH L (mm.)
339	270
340	330

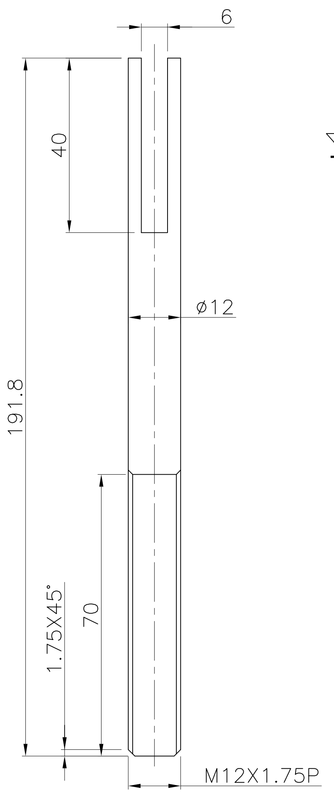

DETAIL OF ITEM NO. 901

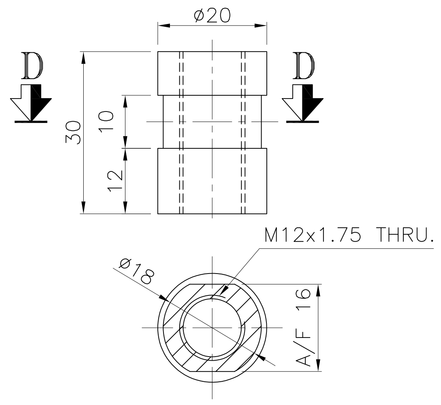

SECTION DD

DETAIL OF ITEM NO. 902

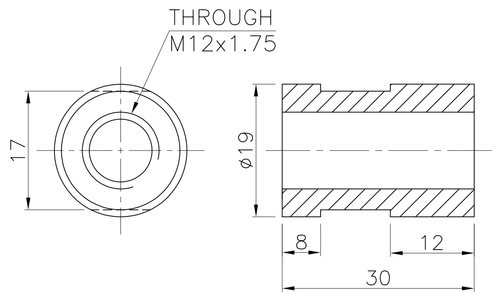

DETAIL OF ITEM NO. 336

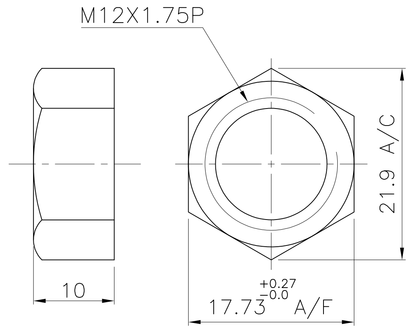

DETAIL OF ITEM NO. 341

DO NOT SCALE THE DRAWING.
UNLESS OTHERWISE STATED:-
ALL DIMENSIONS ARE IN mm.
MACHINE ALL OVER.
SURFACE FINISH TO BE 3.2 OR BETTER.
REMOVE ALL BURRS.
REMOVE ALL EXTERNAL SHARP CORNERS AND EDGES BY CHAMFERING TO 0.15/0.40 x 45°.
ROUND ALL INTERNAL CORNERS AND EDGES TO R 0.15/0.40.
TOLERANCES ON RADII AND CHAMFERS (IS : 2102)

REDII AND CHAMFERS	0.5-3	3-6	6-30
TOLERANCES	±0.2	±0.5	±1.0

TOLERANCE ON LINEAR DIMENSIONS (IS:2102)

DIMENSIONS	TOL.	DIMENSIONS	TOL.
UP TO 6	±0.1	315 -1000	±0.8
6 - 30	±0.2	1000-2000	±1.2
30 - 120	±0.3	2000-4000	±2.0
120 - 315	±0.5	4000-8000	±3.0

TOLERANCE ON LINEAR DIMENSIONS

SPECIFIED DIMENSIONS	TOLERANCE
XX	± 0 . 40
XX.X	± 0 . 40
XX.XX	± 0 . 25

TOLERANCE ON ANGULAR DIMENSIONS : 0°-0.5°

NPCIL PURCHASE ORDER NO. :
CMM/FTP/10-33-1-1149/e-PO/30599
Dtd. 25/01/2019

ADDITIONAL INFORMATION
DRG. LIST : 4-16503-40358

STATUS OF DRAWING
W/O. NO. : 18085/86-W-04801

DISTRIBUTION OF PRINTS
CDE - 2 FWM - 4
HCM - 4

NUCLEAR POWER CORPORATION OF INDIA LIMITED
(A GOVERNMENT OF INDIA ENTERPRISE)

उत्पाद का प्रकार या ग्राहक/परियोजना का नाम
TYPE OF PRODUCT OR NAME OF CUSTOMER/PROJECT

BLEED COOLER
GORAKHPUR HARYANA ANU VIDYUT PARIYOJANA - 1&2 (700 MWe)

भारत हेवी इलेक्ट्रिकल्स लिमिटेड भोपाल
BHARAT HEAVY ELECTRICALS LTD
BHOPAL

	नाम/ NAME	हस्ता./ SIGN	दिनांक/DATE	वे.रि. की संख्या NO. OF VAR.
बनाया DRN.	राधाकान्त मेहेर	राधाकान्त	01/05/2019	
जाँचा CKD.	नागेन्द्र सिंह	नगेन्द्र सिंह	03/05/2019	
अनुमोदित APPD.	ए.के.माहौर		06/05/2019	

REV.	DATE	ALTERED / CHECKED / APPROVED	REV.	DATE	ALTERED / CHECKED / APPROVED	REV.	DATE	ALTERED	CHECKED	APPROVED
						01	18.03.20	राधाकान्त मेहेर	नागेन्द्र सिंह	ए.के.माहौर
ZONE			ZONE			ZONE	REFER SHEET 01 OF 02.			

विभाग DEPT.	अन.टाल. नाप की श्रेणी UNTOL. DIMS. GR.	अनुपात SCALE	भार (कि.ग्रा.) WEIGHT (K.G.)	असे. ड्राईंग का संदर्भ REF. TO ASSY. DRG.	मद क्र. ITEM NO.	मद संख्या NO. OF ITEM
CDE				--	-	-
कोड CODE 411	AA0230208 M	-	-			

शीर्षक/ TITLE
FASTENERS

ड्राईंग क्र./ DRAWING NO. 3-16503-40901
पुन./REV. 01
पृष्ठ क्र./ SHT. NO.02 पृष्ठों की संख्या/ NO. OF SHT.02

COPY RIGHT AND CONFIDENTIAL
The information on this document is the property of BHARAT HEAVY ELECTRICALS LIMITED
it must not be used directly or indirectly in any way deterimental to the interest of the company.

SIGN. & DATE

INVENTORY NO.

FORMAT SIZE A3