FIRST ANGLE PRJECTION | Fold-1 | ALL DIMENSIONS ARE IN MM

DRAWING NO. 3-16503-40899

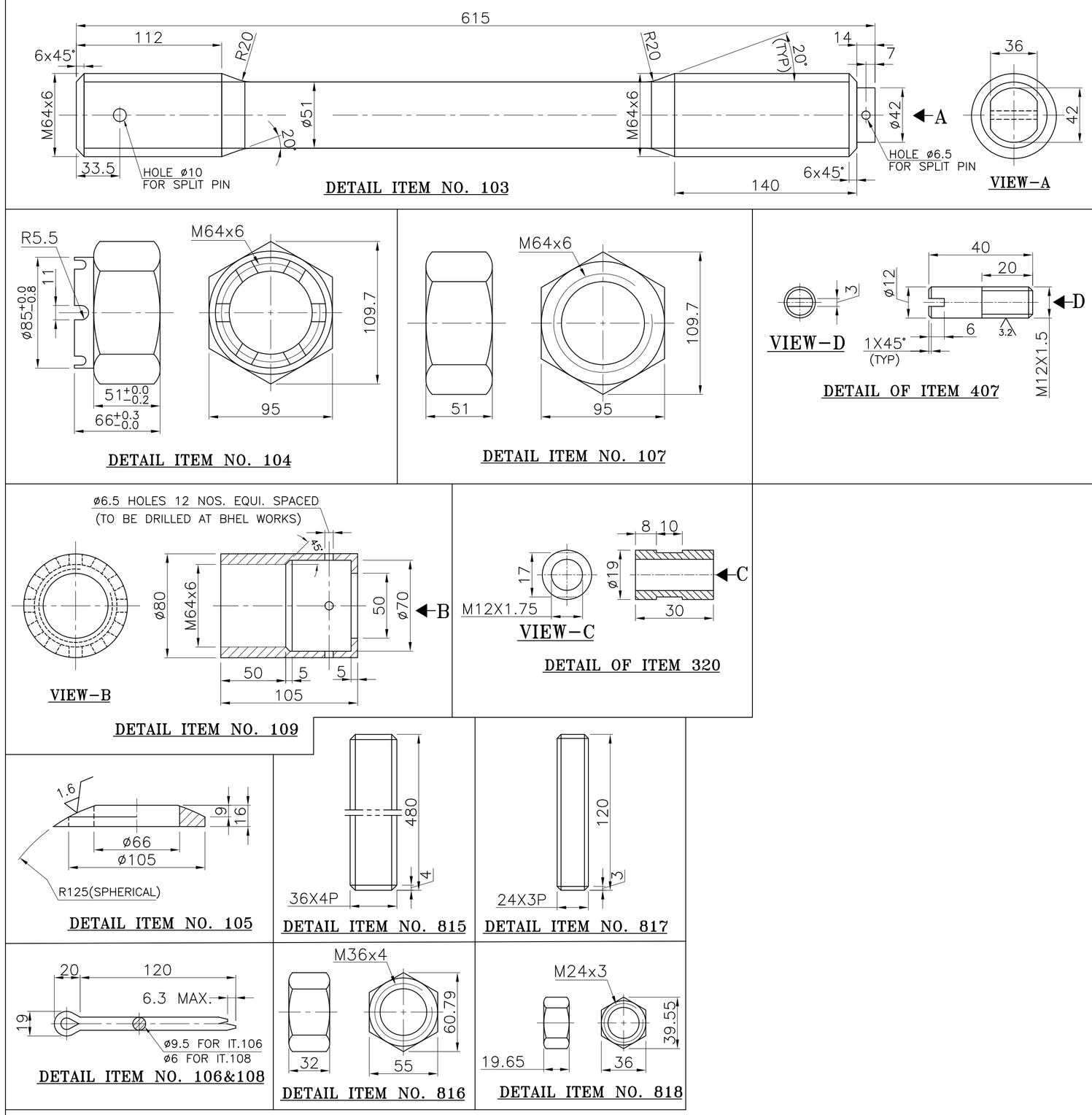

TECHNICAL REQUIREMENTS (TR) :-

1. THE THREADED SURFACE AND MACHINE SURFACE SHALL BE SUITABLY PROTECTED AGAINST MECHANICAL DAMAGE & PRESERVED CLEAN.
2. THE STANDARD NUT DIMENSIONS SHALL BE AS PER IS 1364 (PART 3) : 2002.
3. PROTECT ALL MACHINED SURFACE AND THREADED CONNECTIONS WITH RUST PREVENTIVE IMMEDIATELY AFTER NDE & MACHINING.
4. THREADING SHALL BE AS PER ISO@ ANSI B1.1
5. ALL SHARP CORNERS SHALL BE ROUNDED OFF TO SMOOTH RADIUS.
6. THREADS OF ALL STUDS/NUTS SHALL BE APPLIED WITH MOLYBDENUM DISULFIDE.

NOTE– QTY. MENTIONED IN BOM ARE FOR 1 NO. HEAT EXCHANGER.

VAR00 QTY.NOS	REMARKS	VAR. NO.	ITEM NO.	DESCRIPTION	STD	DRAWING NO.	IT.NO. / VAR.	MATL. CODE / MATL. SPCN.	UNIT	UNIT WT. / QTY.	GS	ZONE
10	–	00	320	NUT M12 X 1.75		–		– / SA 479 Gr.304L	A	KG 0.02		
04	ø20x130Lg	00	919	FIXING ROD		–		B.O. / SA479 GR304L	A	KG 0.10		
01	–	00	407	DOWEL PIN		–		B.O. / SA350 Gr.LF2/SA193Gr.B7	A	KG 0.04		
8	–	00	818	NUTS M24 X 3P		–		BO / SA 194 GR. 2H	A	KG 0.25		
4	–	00	817	STUD M24X3PX120LG. (FULLY THREDED)		–		BO / SA 193 B7	A	KG 1.25		
16	–	00	816	NUTS M36 X 4P		–		BO / SA 194 GR. 2H	A	KG 0.30		
8	–	00	815	STUD M36X4PX480LG. (FULLY THREDED)		–		BO / SA 193 B7	A	KG 1.75		
16	–	00	109	STUD CAP		–		B.O. / CS to IS 9550	A	KG 1.68		
16	–	00	108	SPLIT PIN ø6		–		B.O. / IS 549	A	KG 0.033		
16	–	00	107	HEX NUT M64X6		–		B.O. / 34CrNiMO6	A	KG 2.0		
16	–	00	106	SPLIT PIN ø9.5		–		B.O. / IS 549	A	KG 0.05		
16	–	00	105	SPHERICAL WASHER		–		B.O. / 34CrNiMO6	A	KG 0.66		
16	–	00	104	CASTLE NUT M64X6		–		B.O. / 34CrNiMO6	A	KG 2.63		
16	–	00	103	STUD M64X6X615		–		B.O. / 20NiCrMO14.5	A	KG 12.3		

28 → CARD TYPE-3 | 28 → CARD TYPE-1 | 28 → CARD TYPE-2

NUCLEAR POWER CORPORATION OF INDIA LIMITED
(A GOVERNMENT OF INDIA ENTERPRISE)

PROJECT : GORAKHPUR HARYANA ANU VIDHYUT PARIYOJANA 1&2 (700 MWe)

NPCIL PURCHASE ORDER NO. : CMM/FTP/10-33-1-1149/e-PO/30599, DATED 25.01.2019

एनपीसीआईएल NPCIL

उत्पाद का प्रकार ~~सा~~
~~ग्राहक/परियोजना का नाम~~
TYPE OF PRODUCT ~~OR~~
~~NAME OF CUSTOMER/PROJECT~~

REGENERATIVE COOLER

DO NOT SCALE THE DRAWING.
UNLESS OTHERWISE STATED:–
ALL DIMENSIONS ARE IN mm.
MACHINE ALL OVER.
SURFACE FINISH TO BE 3.2 OR BETTER.
REMOVE ALL BURRS.
REMOVE ALL EXTERNAL SHARP CORNERS AND EDGES BY CHAMFERING TO 0.15/0.40 x 45°.
ROUND ALL INTERNAL CORNERS AND EDGES TO R 0.15/0.40.
TOLERANCES ON RADII AND CHAMFERS (IS : 2102)

REDII AND CHAMFERS	0.5–3	3–6	6–30
TOLERANCES	±0.2	±0.5	±1.0

TOLERANCE ON LINEAR DIMENSIONS (IS:2102)

DIMENSIONS	TOL.	DIMENSIONS	TOL.
UP TO 6	±0.1	315 –1000	±0.8
6 – 30	±0.2	1000–2000	±1.2
30 – 120	±0.3	2000–4000	±2.0
120 – 315	±0.5	4000–8000	±3.0

TOLERANCE ON LINEAR DIMENSIONS

SPECIFIED DIMENSIONS	TOLERANCE
XX	± 0 . 40
XX.X	± 0 . 40
XX.XX	± 0 . 25

TOLERANCE ON ANGULAR DIMENSIONS : 0°–0.5°

ADDITIONAL INFORMATION
DRG. LIST : 4–16503–40359

STATUS OF DRAWING
W/O. NO. : 18085/86–W–04801

DISTRIBUTION OF PRINTS
CDE – 1 HCM – 4 FWM – 4

REV.	DATE	
		ALTERED
		CHECKED
		APPROVED
ZONE		

REV.	DATE		
01	29/02/2020	ALTERED	कमलेश गामीत
		CHECKED	मो. वहाब रफीक
		APPROVED	ललित आसनानी
ZONE	DRAWING REVISED & REDRAWN BASED ON LATEST DRAWING SUBMITTED FOR SDC AND BASED ON MOM Dtd.03/01/2020.		

बीएचईएल BHEL
भारत हेवी इलेक्ट्रिकल्स लिमिटेड
भोपाल
BHARAT HEAVY ELECTRICALS LTD.
BHOPAL

	नाम/ NAME	हस्ता./SIGN	दिनांक/DATE	वे.रि. की संख्या NO. OF VAR.
बनाया DRN.	विजय कुमार कुशवाहा		01/05/2019	
जाँचा CKD.	नागेन्द्र सिंह		03/05/2019	
अनुमोदित APPD.	ए.के.माहौर		06/05/2019	

विभाग DEPT.	अन.टाल. नाप की श्रेणी		अनुपात SCALE	भार (कि.ग्रा.) WEIGHT (K.G.)	असे. ड्राइंग का संदर्भ REF. TO ASSY. DRG.	मद क्र. ITEM NO.	मद संख्या NO. OF ITEM
CDE	UNTOL. DIMS. GR.		-	-	1–16503–40849,871,893, 897,903	–	–
कोड CODE 411							

शीर्षक/ TITLE
FASTENERS

ड्राइंग क्र./DRAWING NO. 3–16503–40899
पुन./ REV. 01
पृष्ठ क./ SHT. NO.01 | पृष्ठों की संख्या/ NO. OF SHT. 01

COPY RIGHT AND CONFIDENTIAL
The information on this document is the property of BHARAT HEAVY ELECTRICALS LIMITED
it must not be used directly or indirectly in any way determental to the interest of the company.

REF. DRG. NO. | SIGN. & DATE | INVENTORY NO.

Fold-1 | FORMAT SIZE A3