FIRST ANGLE PROJECTION

ALL DIMENSIONS ARE IN mm

DRG. NO. 2 252 03 80602

THE INFORMATION ON THIS DOCUMENT IS THE PROPERTY OF BHARAT HEAVY ELECTRICALS LIMITED.
IT MUST NOT BE USED DIRECTLY OR INDIRECTLY IN ANY WAY DETRIMENTAL TO THE INTEREST OF THE COMPANY.

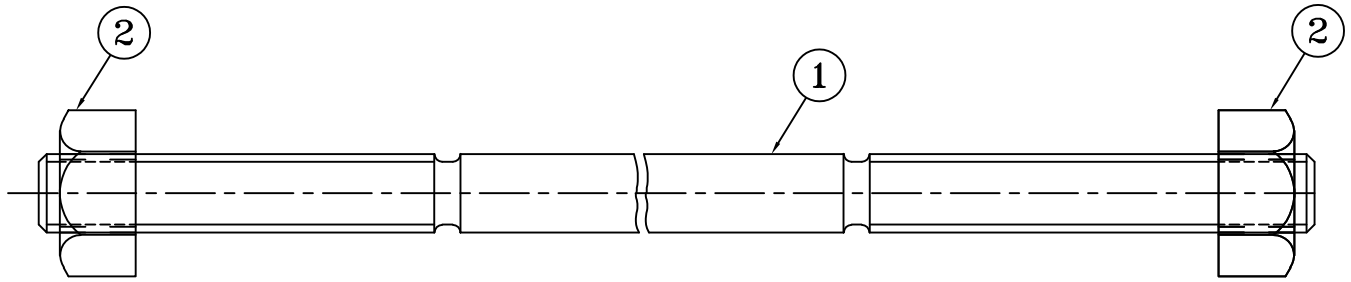

ASSEMBLY OF ITEMS 1 & 2
(AT SUPPLIER'S WORKS FOR SHIPPING PURPOSE)

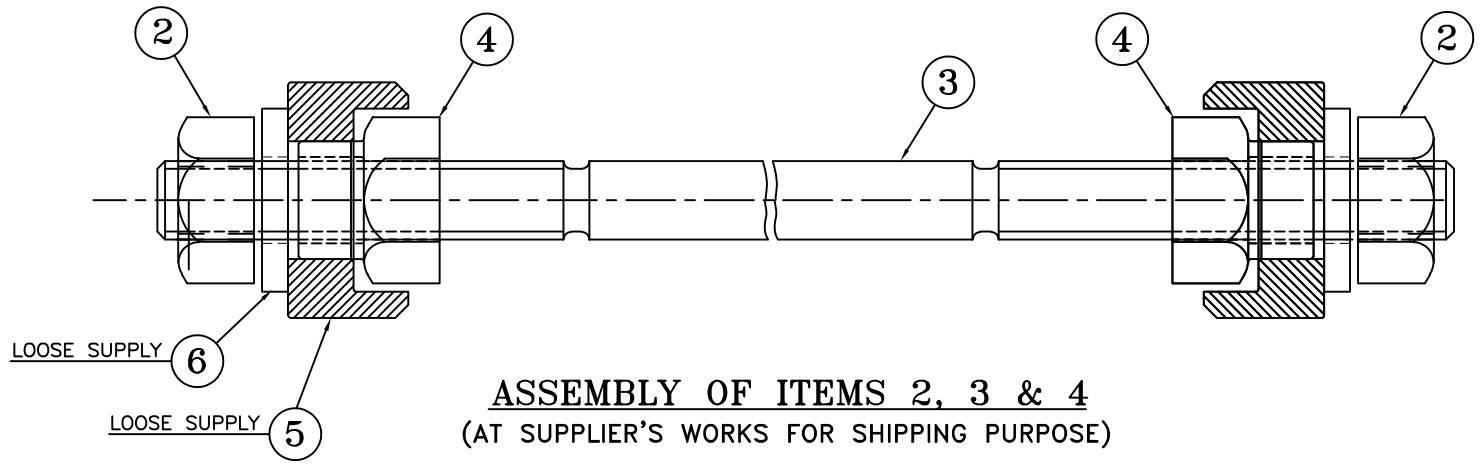

ASSEMBLY OF ITEMS 2, 3 & 4
(AT SUPPLIER'S WORKS FOR SHIPPING PURPOSE)

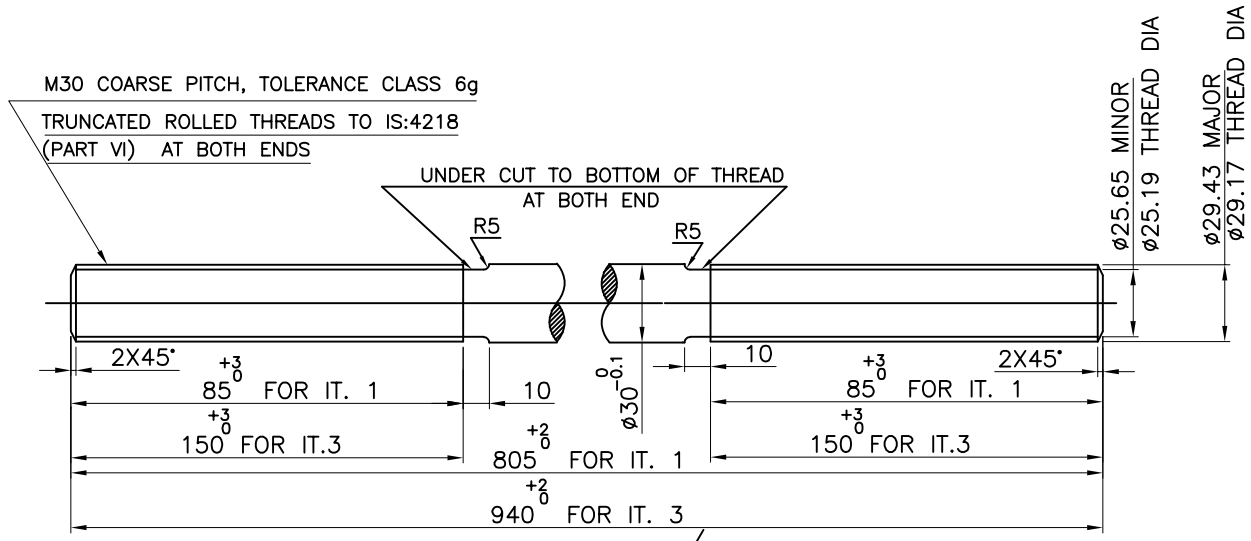

1 3 ▽ ALL OVER

TECHNICAL REQUIREMENTS:–

1. STUDS ARE TO BE STRAIGHT WITHIN 0.5 MM/METER.
2. TEST CERTIFICATES FOR CHEMICAL COMPOSITION AND MECHANICAL PROPERTIES ARE TO BE SUBMITTED FOR BOTH STUD & NUT.
3. SURFACE FINISH OF MACHINED SURFACES SHALL BE 3.2 MICRONS OR BETTER.
4. THREADS ON IT. 2&4 MUST MATCH PERFECTLY WELL WITH THREADS ON IT. 1&3.
5. STUDS & NUTS TO BE COATED WITH ANTI–RUST COMPOUND TO BP0690084 BEFORE DESPATCH.
6. EACH STUD TO BE FITTED WITH RESPECTIVE NUT/NUTS AT EACH END DURING DISPATCH AS SHOWN.
7. THREADS ARE TO BE CHECKED BY PROPER GAUGE & NUTS ARE TO BE INTERCHANGEABLE.
8. PROPER PROTECTION SHALL BE GIVEN TO THREAD BEFORE DESPATCH.
9. THE THREADED PORTION TO BE EXAMINED FOR ANY CRACKS. NO CRACKS ARE PERMITTED IN THE THREADED PORTION OF THE STUD. CUT THREADS ARE NOT ALLOWED.

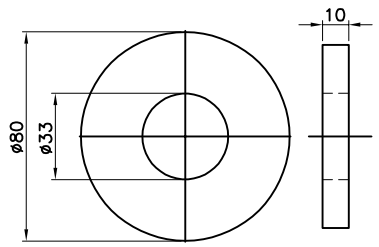

6 ▽ ALL OVER

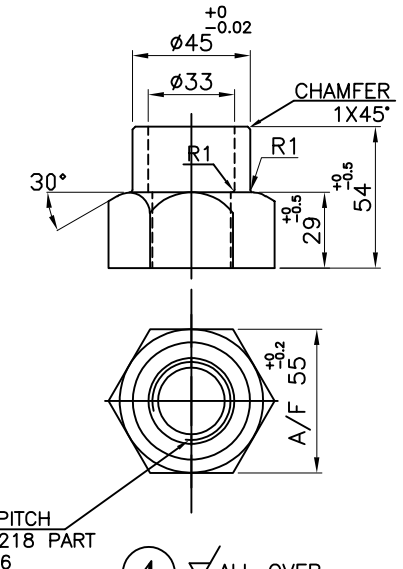

4 ▽ ALL OVER

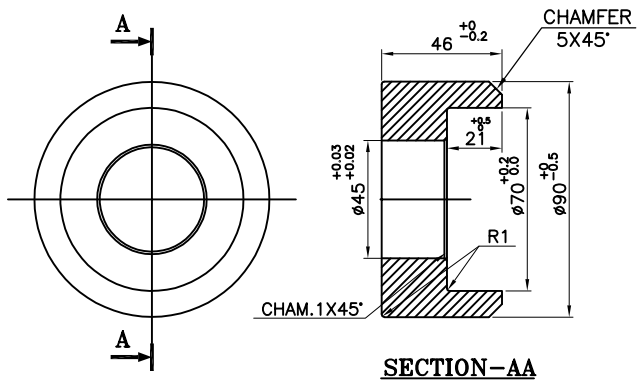

SECTION–AA

5 ▽ ALL OVER

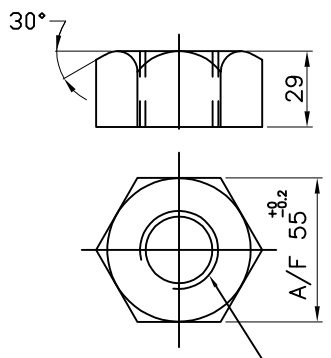

2 ▽ ALL OVER

THREAD M30 COARSE PITCH
TOLERANCE CLASS 6H TO IS:4218
PART VI HEX NUT TO IS:1364–S6

VAR00 (59–64)	REMARKS (65–75)	VAR. NO. (78 79)	ITEM NO. (25–27)	DESCRIPTION (29–58)	STD (59)	DRAWING NO. (60–77)	IT.NO. (29–31) / VAR. (32–33)	MATL. CODE (34–45) / MATL. SPCN. (46–54)	A C I (55)	UNIT (56 57)	UNIT WT. (58–65) / QTY. (68–71)	GS (72)	ZONE
164	INCLUDES 4 EXTRA		006	SPECIAL WASHER				AA10108	NA	NO	0.33		
164	INCLUDES 4 EXTRA		005	BUSH FOR FAN FIXING				AA10108	NA	NO	1.36		
164	INCLUDES 4 EXTRA		004	RIM NUT WITH COLLAR M30				AA10501	NA	NO	0.58		
082	INCLUDES 2 EXTRA		003	RIM STUD M30 (FOR FAN FIXING)				AA10501	NA	NO	5.22		
1132	INCLUDES 12 EXTRA		002	RIM NUT M30				AA10501	NA	NO	0.44		
484	INCLUDES 4 EXTRA		001	RIM STUD M30				AA10501	NA	NO	4.47		

28 — CARD TYPE-3 | 28 — CARD TYPE-1 | 28 — CARD TYPE-2

ADDITIONAL INFORMATION
W.O.–33201 TO 3–A–231–52(PH–I)
W.O.–33204 TO 6–A–231–52(PH–II)

STATUS OF DRAWING: U

DISTRIBUTION OF PRINTS
HGE–2 HGM–2
TEX–1

mRikn dk i–dkj ;k xk–gd@ifj;kstuk dk uke
TYPE OF PRODUCT OR NAME OF CUSTOMER/PROJECT

HGS 847/66–40D
PSPCL/SHAHPURKANDI HEP
PH–I (3X33 MW) & PH–II (3X33 MW)

HAkjr gsoh bysfDV&dYl fyfeVsM HAksiky
BHARAT HEAVY ELECTRICALS LTD.
BHOPAL

	uke@ NAME	gLrk_@SIGN	fnaukd@DATE	osfj_ dh la[;k NO. OF VAR.
cuk;k DRN.				
iWkpk CKD.	NK/AKV		14.03.19	
vuqekfnr APPD.	RG		14.03.19	00

foHAkx DEPT. HGE | vu_Vky_ uki dh Js.kh UNTOL. DIMS. GR. 32500001404 | vuqikr SCALE 1:2 | HAkj fd_ WEIGHT (K.G.) – | vls_ M&kbax dk lanHAZ REF. TO ASSY. DRG. 0 252 03 80601 | en d–_ ITEM NO. – | en la[;k NO. OF ITEM 006

dksM CODE 403

TITLE: **SET OF ROTOR RIM STUDS & NUTS**

DRAWING NO. 2 252 03 80602 | iqu_@REV. 00

i="B d–_SHT. NO. 01 | i="Bksa dh la[;k NO. OF SHT. 01

REV.	DATE	ALTERED / CHECKED / APPROVED	REV.	DATE	ALTERED / CHECKED / APPROVED	REV.	DATE	ALTERED / CHECKED / APPROVED

REV.	DATE	ALTERED / CHECKED / APPROVED
ZONE		

REF. DRG. NO. | SIGN AND DATE | INVENTORY NO.

A2