FIRST ANGLE PROJECTION

ALL DIMENSIOMS ARE IN mm

DRG. NO. 2SP14013675

THE INFORMATION ON THIS DOCUMENT IS THE PROPERTY OF BHARAT HEAVY ELECTRICALS LIMITED.
IT MUST NOT BE USED DIRECTLY OR INDIRECTLY IN ANY WAY DETRIMENTAL TO THE INTEREST OF THE COMPANY.

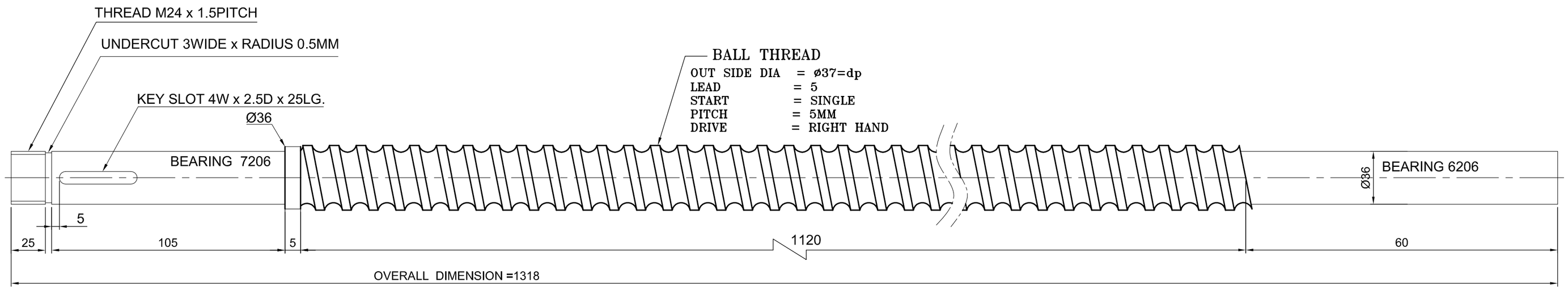

BALL SCREW

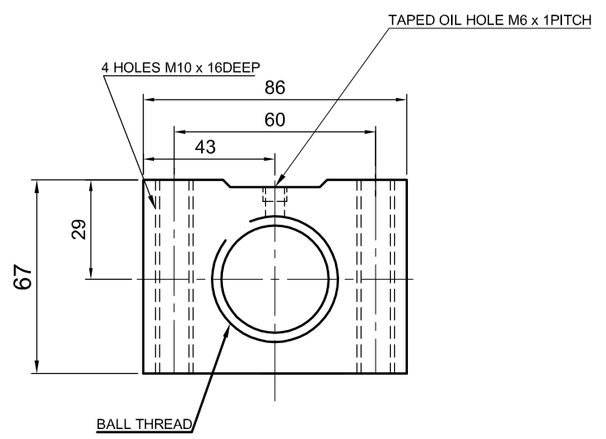

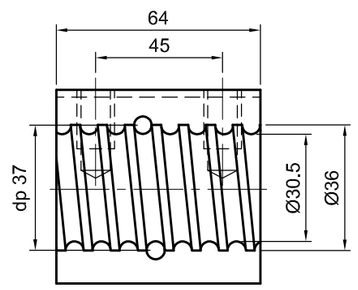

BALL SCREW NUT

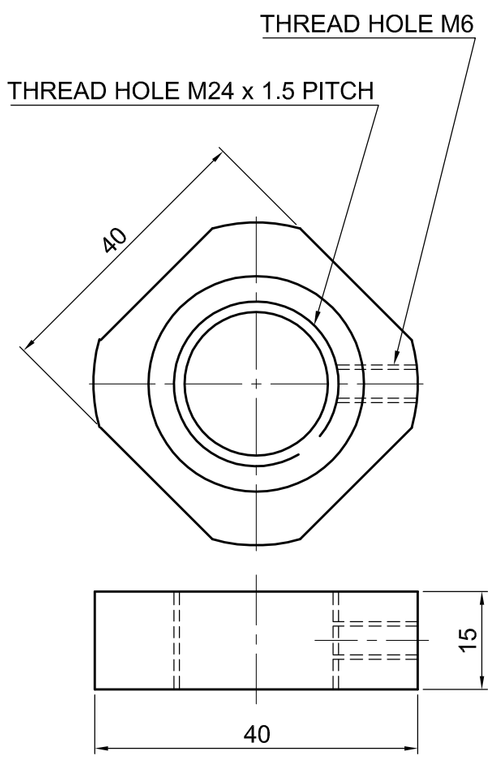

LOCKING NUT

REQUIRED HARDNESS

1. BALL SCREW - 55 HRC OR MORE
2. BALL NUT - 55 HRC OR MORE

FOR INDENT PURPOSE ONLY : ITEM REQD. FOR LATHE M/C

FOR ACCEPTANCE CRITERIA REF ANN-AC
DIMENSION SHALL BE AS PER C3 CLASS OF BS
ISO 3408-3-2006

MACHINING ALL OVER 3.2

DOUBLE NUT PRELOADED TYPE - BALL NUT

BALL SCREW GROUND FINISHED, INTERNAL RECIRCULATION TYPE BALL NUT

ADDITIONAL INFORMATION	TYPE OF PRODUCT OR NAME OF CUSTOMER/PROJECT
STATUS OF DRAWING	
DISTRIBUTION OF PRINTS	BHARAT HEAVY ELECTRICALS LTD. BHOPAL

	NAME	SIGN	DATE	NO. OF VAR.
DRN.	VANDANA		12.07.16	00
CHD.	B.S.PHOGAT		15.07.16	
APPD.	SUNAY GAUR		15.07.16	

REV.	DATE	ALTERED / CHECKED / APPROVED	REV.	DATE	ALTERED / CHECKED / APPROVED	REV.	DATE	ALTERED / CHECKED / APPROVED
ZONE			ZONE			ZONE		

DEPT.	UNTOL. DIMS. GR.	SCALE	WEIGHT (K.G.)	REF. TO ASSY. DRG.	ITEM NO.	NO. OF ITEM
WEX / CODE 375						

TITLE: BALL SCREW HMT M3V MILLING MACHINE IT.NO-15/A/114 SPEC NO-141 (CROSS SLIDE)

DRAWING NO. 2SP14013675 REV. 00

SHT. NO. 01 NO. OF SHT. 01

REF. DRG. NO. | SIGN. & DATE | INVENTORY NO.

A2

SIZE A2