First Angle Projection

All dimensions in 'mm'

DRG.No. 24994350015

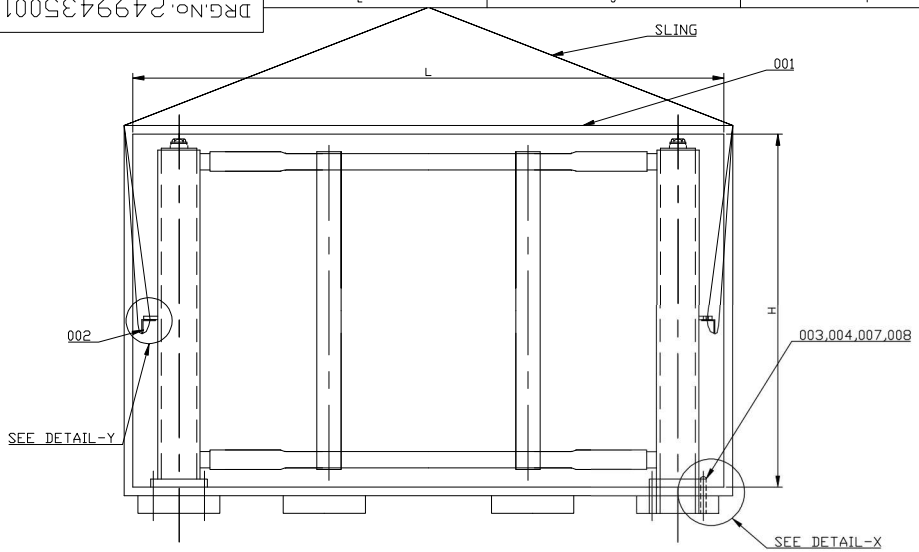

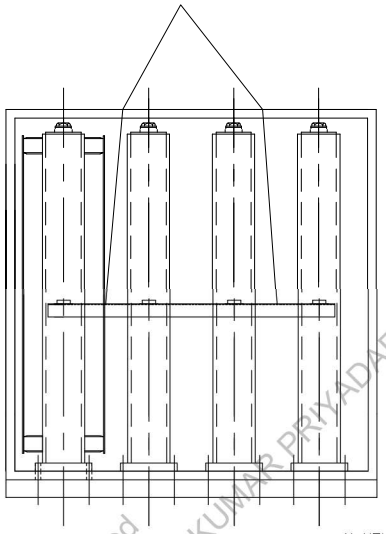

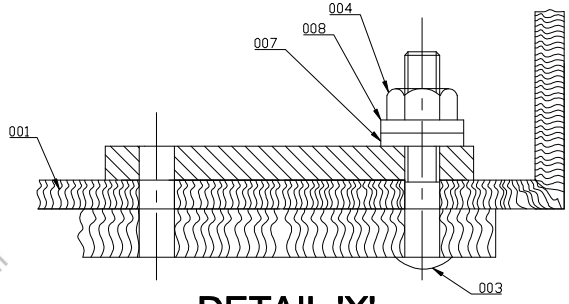

DETAIL 'X'

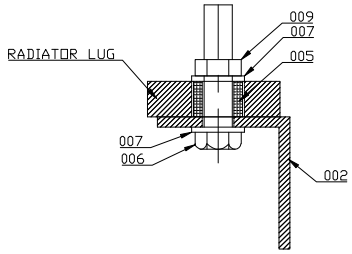

DETAIL 'Y'

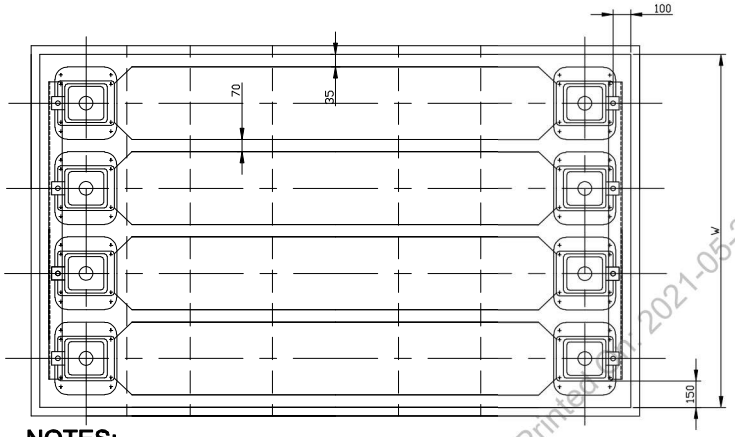

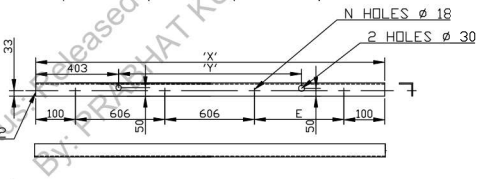

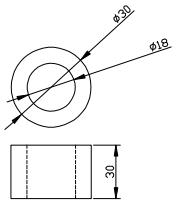

ITEM-005

TABLE - 1	
VALVE CENTRE	CRATE LENGTH 'L'
1200	1510
1800	2110
2400	2710
3000	3310
1600	1910
3500	3810

TABLE - 2	
NO. OF RADIATORS	CRATE WIDTH 'W'
3	1818
4	2424

TABLE - 3	
NO. OF ELEMENTS	CRATE HEIGHT 'H'
12	850
14	960
16	1070
18	1180
20	1290
22	1400
24	1510
26	1620
28	1730

TABLE - 4				
NO. OF RADIATORS	'E'	'X'	'Y'	'N'
3	0	1412	606	3
4	606	2018	1212	4

NOTES:-

1. ITEM 002 CLAMPING BAR IS TO BE PAINTED AS PER RADIATOR DRG. 04994300010.
2. ITEMS 003, 004, 006, 007, 008 & 010 ARE TO BE OIL IMMERSED.
3. THE ARRGT. SHOWN IN THIS DRG. IS FOR VERTICAL PACKING OF 3 AND 4 NOs. RADIATORS OF ANY VALVE CENTRES AND ELEMENTS AS PER DRG. NO. 04994300010.
4. USE TABLE-1,TABLE-2, & TABLE-3 FOR CRATE LENGTH 'L', CRATE WIDTH 'W', CRATE HEIGHT 'H' RESPECTIVELY.
5. USE TABLE-4 FOR PARAMETERS E,X,Y & N.

FOR BOM REFER E-BOM 24994350015

ADDITIONAL INFORMATION
99999999999

STATUS OF DRAWING
TD

DISTRIBUTION OF PRINTS

TRE	PPC	BAY 1&2	BAY 3,4&5	BAY 6&7	BAY 8	BAY 9	LMM	Other
								0

TYPE OF PRODUCT OR STD

NAME OF CUSTOMER/PROJECT

BHARAT HEAVY ELECTRICALS LTD. JHANSI

	NAME	SIGN	DATE
DRN	SV		24/04/2021
CHD	SV		03/05/2021
APPD	SSY1		03/05/2021

NO. OF VAR

REV	DATE	ALTERED	REV	DATE	ALTERED	REV	DATE	ALTERED	REV	DATE	ALTERED
		CHECKED			CHECKED			CHECKED			CHECKED
		APPROVED			APPROVED			APPROVED			APPROVED
ZONE			ZONE			ZONE			ZONE		

REV	DATE	ALTERED
00	03/05/2021	ALTERED SV
		CHECKED SV
		APPROVED SSY1

ZONE

DEPT-TRE

CODE-406

UN. TOL. DIM. C/M/F

SCALE

WEIGHT (KG)

REF. TO ASSY. NO.

ITEM NO

NO. OF ITEM

TITLE
TYPICAL VERTICAL PACKING ARRGT.
(FOR 2 & 3 NOS. 9-FLUTE RADIATOR)

DRAWING NO. 24994350015

REV. 00

SHT NO 1

NO OF SHT 1

REF. DRG. NO.

SIGN AND DATE

INVENTORY NO.

SIGNATURE NOT REQUIRED AS IT IS SYSTEM GENERATED DRAWING

SIZE A2

The information on this dociment is the property of Bharat Heavy Electricals Limited. It must not be used directly or indirectly in any way detrimental to the interest of the company

Status: Released
Printed on: 2021-05-29 12:06:21 By: PRABHAT KUMAR PRIYADARSHI