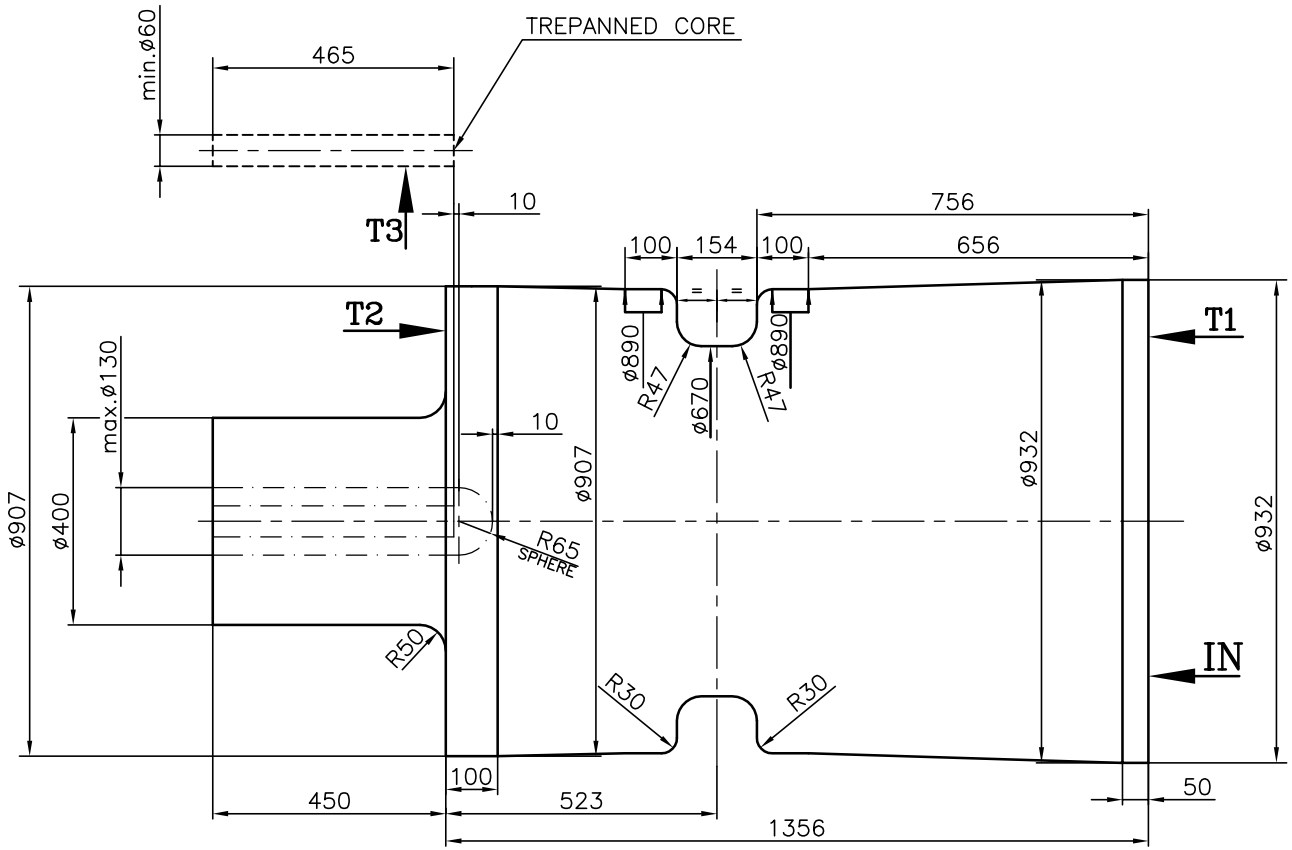

12.5 ALL OVER

TECHNICAL REQUIREMENTS:–

1. MATERIAL : ALLOY 617M
2. PERMISSIBLE TOLERANCES :–
   ON INSIDE DIMENSION: –1.
   ON OUTSIDE DIMENSION: +1.
3. DRAWING NUMBER, MATERIAL GRADE, SUPPLIERS REFERENCE, PURCHASE ORDER NO. HEAT NUMBER ARE TO BE PUNCHED AT LOCATION MARKED WITH IN AND SUITABLY MARKED WITH PAINT.
4. TANGENTIAL SAMPLE FROM LOCATION MARKED WITH (T1) AND (T2) SHALL BE TAKEN FOR MECHANICAL TESTING. BALANCE RING SHALL BE LEFT INTEGRAL WITH THE SHAFT FOR RETESTING PURPOSES AT BHEL.
5. RADIAL SAMPLE TO BE TAKEN FROM LOCATION MARKED WITH (T3) FOR MECHANICAL TESTING. BALANCE AXIAL CORE SHALL BE SENT TO BHEL ALONG WITH FORGING.
6. FORGING SHALL BE SUITABLY PACKED TO PREVENT CORROSION AND DAMAGE DURING TRANSIT.
7. WEIGHT : 7466.00 kg.

(ALL DIMENSIONS ARE IN mm)

	NAME	SIGN	DATE
DRN	RAJPAL	sd/–	01.06.17
CHD	SUJEET	sd/–	01.06.17
APPD	T.S.G.	sd/–	03.06.17

Rotor Forging for Test Rig
(ROUGH MACHINED)

DRAWING NO. LTT–005