First Angle Projection

All dimensions in 'mm'

DRG.No. 2 467 6550021

The information on this dociment is the property of Bharat Heavy Electricals Limited. It must not be used directly or indirectly in any way detrimental to the interest of the company

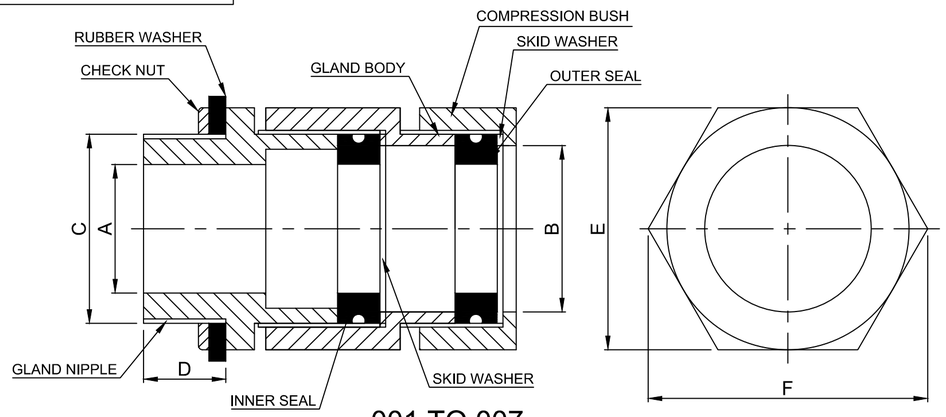

001 TO 007

(FOR UNARMOURED CABLE)

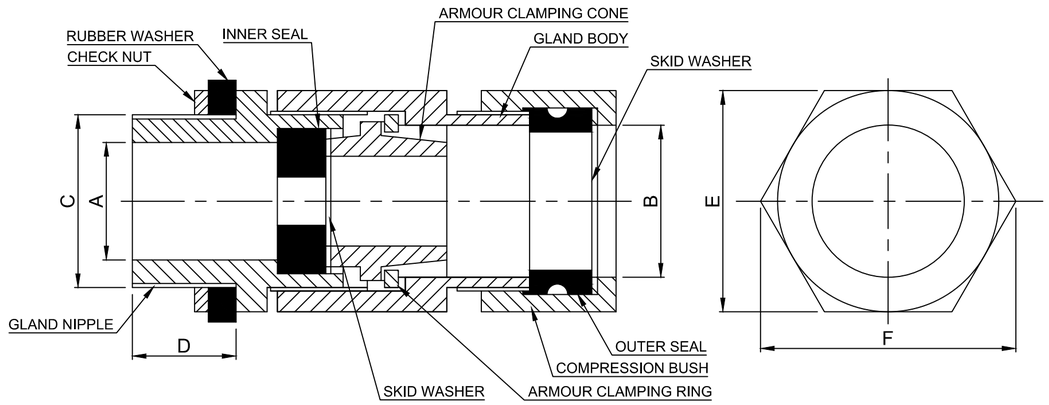

011 TO 022

(FOR ARMOURED CABLE)

NOTES:-

1. GLANDS SHOULD BE SUITABLE FOR OUTDOOR USE.
2. PROTECTION CLASS IP-66 (MIN) AS PER IS-13947 / IS-12063.
3. FOR GENERAL REQUIREMENTS REFER BS-6121-PART-I.
4. ALL PARTS (EXCEPT SEALS & RUBBER WASHER) ARE TO BE MADE FROM BRASS (IS-12943-1990) .
5. ALL SEALS & RUBBER WASHER ARE TO BE MADE FROM NEOPRENE RUBBER (SHORE HARDNESS 55-60)
6. ALL METAL PARTS SHALL BE ELECTRO NICKEL PLATED AS PER IS-12393 Cu/Ni10b. PLATING SHALL BE BRIGHT & THICKNESS SHALL BE 10 MICRONS MIN.

VAR 00	REMARKS	VAR NO	ITEM NO	DESCRIPTION / SIZE	DRAWING NO	IT. NO / VAR	MATL CODE / MATL SPECN	A/C	UNIT	UNIT WT / QTY.	GS	ZONE
001	SEE TABLE FOR DIMENSION		022	DOUBLE COMPRN. CABLE GLAND ASSY. (CBW10)								
001	SEE TABLE FOR DIMENSION		021	DOUBLE COMPRN. CABLE GLAND ASSY. (CBW09)								
001	SEE TABLE FOR DIMENSION		020	DOUBLE COMPRN. CABLE GLAND ASSY. (CBW08)			ST 627063			000. 155 / 001		
001	SEE TABLE FOR DIMENSION		019	DOUBLE COMPRN. CABLE GLAND ASSY. (CBW07)			ST 627742			001		
001	SEE TABLE FOR DIMENSION		018	DOUBLE COMPRN. CABLE GLAND ASSY. (CBW06)			ST 627062			000. 540 / 001		
001	SEE TABLE FOR DIMENSION		017	DOUBLE COMPRN. CABLE GLAND ASSY. (CBW05)			ST 627819			001		
001	SEE TABLE FOR DIMENSION		016	DOUBLE COMPRN. CABLE GLAND ASSY. (CBW04)			ST 627818			001		
001	SEE TABLE FOR DIMENSION		015	DOUBLE COMPRN. CABLE GLAND ASSY. (CBW03)			ST 627061			001		
001	SEE TABLE FOR DIMENSION		014	DOUBLE COMPRN. CABLE GLAND ASSY. (CBW02)			ST 627743			001		
001	SEE TABLE FOR DIMENSION		013	DOUBLE COMPRN. CABLE GLAND ASSY. (CBW01A)			ST 627060			019. 175 / 001		
001	SEE TABLE FOR DIMENSION		012	DOUBLE COMPRN. CABLE GLAND ASSY. (CBW01)			ST 627059			000. 155 / 001		
001	SEE TABLE FOR DIMENSION		011	DOUBLE COMPRN. CABLE GLAND ASSY. (CBW01S)			ST 627744			001		
			010									
			009									
			008									
001	SEE TABLE FOR DIMENSION		007	DOUBLE COMPRN. CABLE GLAND ASSY. (CBW06SP)			ST 627783			001		
001	SEE TABLE FOR DIMENSION		006	DOUBLE COMPRN. CABLE GLAND ASSY. (CBW05A)			ST 627820			001		
001	SEE TABLE FOR DIMENSION		005	DOUBLE COMPRN. CABLE GLAND ASSY. (CBW04A)			ST 627821			001		
001	SEE TABLE FOR DIMENSION		004	DOUBLE COMPRN. CABLE GLAND ASSY. (CBW03SP)			ST 627817			001		
001	SEE TABLE FOR DIMENSION		003	DOUBLE COMPRN. CABLE GLAND ASSY. (CBW02)						001		
001	SEE TABLE FOR DIMENSION		002	DOUBLE COMPRN. CABLE GLAND ASSY. (CBW01A)						019. 175 / 001		
001	SEE TABLE FOR DIMENSION		001	DOUBLE COMPRN. CABLE GLAND ASSY. (CBW01S)						000. 155 / 001		

ARMOURED CABLES

ITEM NO.	GLAND REF.	CABLE DIA. (mm)	DIM -A (mm)	DIM -B (mm)	ARMOUR WIRE DIAMETER (mm)	ENTRY THREAD DIM -C (INCHES)	ENTRY THREAD DIM -D (mm) LENGTH	DIM -E (mm) ACROSS FLATS	DIM -F (mm) ACROSS CORNERS
			MIN.	MIN.			TOL ± 2	MAX	MAX
011	CBW01S	12.5-16	10.0	16.5	0.8/1.4	3/4"	15.0	25.0	29.0
012	CBW01	16.5-18	12.0	18.0	0.8/1.4	3/4"	15.0	28.0	32.0
013	CBW01A	16.5-18	12.0	18.0	0.8/1.4	1"	15.0	28.0	32.0
014	CBW02	18.5-20	14.0	20.0	0.8/1.4	1"	15.0	31.5	36.5
015	CBW03	20.5-23	17.0	23.0	0.8/1.4	1"	15.0	32.0	37.0
016	CBW04	23.5-26	20.0	26.0	0.8/1.4	1"	15.0	38.0	44.0
017	CBW05	26.5-30	24.0	30.0	0.8/1.4	11/4"	15.0	41.0	47.0
018	CBW06	30.5-33	27.0	33.0	0.8/1.4	11/2"	15.0	47.0	54.0
019	CBW07	33.5-37	30.0	37.0	0.8/1.4	11/2"	15.0	52.0	58.0
020	CBW08	37.5-41	35.0	41.0	0.8/1.4	2"	15.0	56.0	64.0
021	CBW09	41.5-46	40.0	46.0	0.8/1.4	2"	15.0	59.0	67.0
022	CBW10	46.5-52	46.0	52.0	0.8/1.4	2"	20.0	66.5	77.0

UNARMOURED CABLES

ITEM NO.	GLAND REF.	CABLE DIA. (mm)	DIM -A (mm)	DIM -B (mm)	ENTRY THREAD DIM -C (INCHES)	ENTRY THREAD DIM -D (mm) LENGTH	DIM -E (mm) ACROSS FLATS	DIM -F (mm) ACROSS CORNERS
			MIN.	MIN.		TOL ± 2	MAX	MAX
001	CBW01S	12.5-14	14.5	14.5	3/4"	15.0	25.0	29.0
002	CBW01A	14.5-18	18.0	18.0	1"	15.0	28.0	32.0
003	CBW02	18.5-20	20.0	20.0	1"	15.0	31.5	36.5
004	CBW03SP	20.5-22	23.0	23.0	M28	15.0	32.0	37.0
005	CBW04A	22.5-26	26.0	26.0	1.1/4"	15.0	38.0	44.0
006	CBW05A	26.5-30	30.0	30.0	1.1/2"	15.0	41.0	47.0
007	CBW06SP	30.5-33	33.0	33.0	M40	15.0	47.0	54.0

ADDITIONAL INFORMATION

STATUS OF DRAWING
'U'

DISTRIBUTION OF PRINTS
TRE-1
TRP-1
BAY8-2

उत्पाद का प्रकार या ग्राहक/परियोजना का नाम
TYPE OF PRODUCT OR NAME OF CUSTOMER/PROJECT

HV TRANSFORMER RECTIFIER
STD. DRG.

भारत हेवी इलेक्ट्रिकल्स लिमिटेड झाँसी
BHARAT HEAVY ELECTRICALS LTD. JHANSI

	नाम / NAME	हस्ता / SIGN	दि / DATE	चेरि. की संख्या NO. OF VAR
बनाया DRN	AJAY SRIVASTAVA	-sd-	08.11.14	
जाँचा CHD	A.K. SRIVASTAVA	-sd-	08.11.14	
अनुमोदित APPD	N. VARSHNEY	-sd-	08.11.14	

विभाग DEPT TRE	अन.टाल.नाप की श्रेणी UNTOL. DIM. GR.	अनुपात SCALE	भार (किग्रा.) WEIGHT [KG]	उरो. ड्राइंग का संदर्भ REF. TO ASSY. DRG.	मद.सं. ITEM NO	मद.संख्या NO. OF ITEM
कोड CODE 406	DIM.C/M/F	N.T.S.	-			005

शीर्षक/ TITLE
DOUBLE COMPRESSION CABLE GLAND ASSY.
(ARMOURED & UNARMOURED CABLE)

आरेख क्र/ DRAWING NO. 2 467 6550021

पृष्ठ/ REV. 03

पृष्ठ क्र / SHT NO 01 | पृष्ठों की सं. / NO OF SHT 01

REV	DATE	ALTERED / CHECKED / APPROVED	
03	12.04.16	ALTERED / CHECKED / APPROVED	ITEM NO. 021 & 022 ADDED.
02	04.02.16	ALTERED -sd- / CHECKED -sd- / APPROVED -sd-	IN NOTES BRASS GRADE AND GASKET HARDNESS MENTION.
01	23.09.15	ALTERED -sd- / CHECKED -sd- / APPROVED -sd-	ZONE IN BOM ITEM NO. 004 ST 627817 ADDED.

REF. DRG. NO.

SIGN AND DATE

INVENTORY NO.

SIZE A2