THIRD ANGLE PROJECTION

SH. 01 OF 06 DRG. NO 0-351-09-91019

NOTES:

1. UNLESS OTHERWISE SPECIFIED, WELD PER ITEM 2 AND ITEM 4, CLASS 1, COL BF, INSPECT PER ITEM 2 AND ITEM 3. FLUORESCENT PENETRANT INSPECTION REQUIRED.
2. ALL DIMENSIONS APPLY AFTER FINAL HEAT TREAT.
3. PROCESS IN ACCORDANCE WITH ITEM 2. PAW AND GTAW ALLOWED.
4. DATUM [A] IS ESTABLISHED BY DATUM TARGETS A1, A2, A3, AND EQUALIZING DATUM TARGETS A4 AND A5. DATUM [B] IS PERPENDICULAR TO DATUM [A] AND IS ESTABLISHED BY EQUALIZING DATUM TARGETS B1, B2, B3 AND B4. DATUM [C] IS PERPENDICULAR TO DATUMS [A] AND [B] AND IS ESTABLISHED BY DATUM TARGET LINE C1.
5. PART MISMATCH OR WELD BUILD-UP SHALL NOT EXCEED 0.51 ON GAS PATH, OR 1.02 ON OTHER SURFACES.
6. AFTER WELDING, AND BEFORE COATING, STRESS RELIEF IS OPTIONAL, IF NEEDED.
7. FEATURES MARKED AS [CTQ] ARE DEFINED AS CRITICAL TO QUALITY CHARACTERISTICS AND SHALL CONFORM TO ITEM 7.
8. ALL DIMENSIONS ARE IN MM.
9. THE DIMENSIONS INDICATED ARE FROM THE DATUM TO THE INTERSECTION POINT OF OUTER SURFACE AND THE CENTER LINE OF THE HOLE.

PART NO.	DESCRIPTION	DRAWING NO.	QTY	MATERIAL
1	TRANSITION PIECE BODY	0-351-09-91012	1	NIMONIC N-263 4.78 THK
2	AFT FRAME, TP	0-351-09-91013	1	NIMONIC N-263
3	SLEEVE-COMB TRNSN PC	4-351-09-91009	1	NIMONIC N-263 4.78 THK

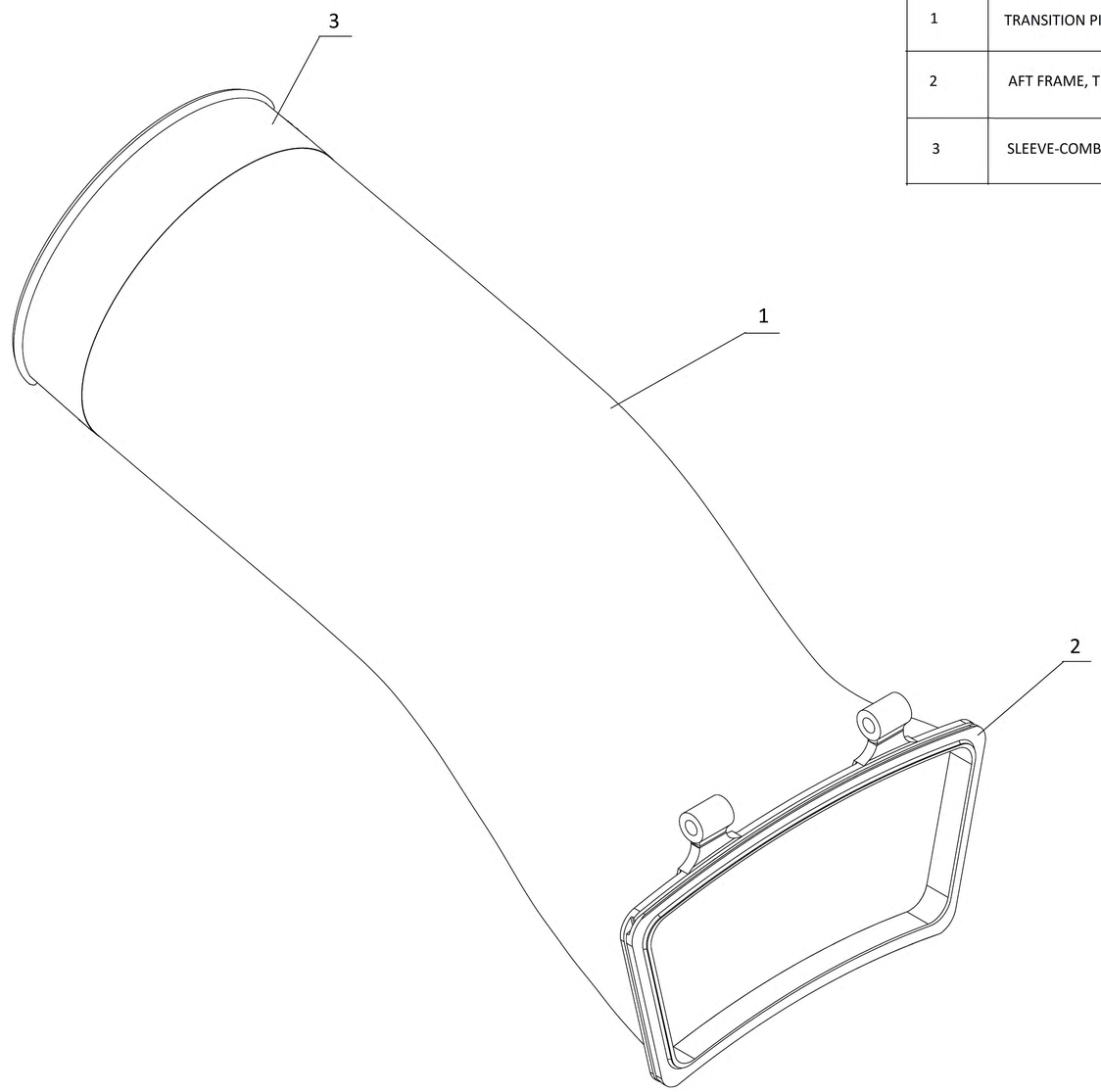

THE INFORMATION ON THIS DOCUMENT IS THE PROPERTY OF BHARAT HEAVY ELECTRICALS LIMITED. IT MUST NOT BE USED DIRECTLY OR INDIRECTLY IN ANY WAY DETRIMENTAL TO THE INTEREST OF THE COMPANY

8	HVOF COATING	P16B-AG11	GT10708
7	CTQ PROCESS CAPABILITY DATA COLLECTION	P28A-AL-0001	
6	PLASMA SPRAYED THERMAL BARRIER COATING	P16B-AG8	GT10086
5	IDENT-TURB/GEN PARTS AND MATL	P23A-AG2	GT10444
4	WELDING-GENL SPEC	P8A-AG1	GT54031
3	INSTR, WELDING VIS ACPT	307A9466	GT10333
2	GEN REQT-ADV COMB TP	P3B-AG18	GT11070
1	APLD PRAC, GENL MACH	348A9200	HY0230261
IT.	NOMENCLATURE	IDENT	BHEL SPECS

LIST OF COMPLEMENTARY DOCUMENTS

TYPE OF PRODUCT OR NAME OF CUSTOMER/PROJECT: FR 9E

BHARAT HEAVY ELECTRICALS LIMITED
HYDERABAD

	NAME	SIGN.	DATE
DRN.	KSR		09.11.20
CHD.	RAVI		09.11.20
APPD.	MSK		09.11.20

NO. OF VAR. NA

DEPT. CTD CODE 423 | UNTOL. DIMS. GR. B/M/F | SCALE NTS | WEIGHT (KG) 51.0 | REF. TO ASSY. ORG. | ITEM NO. NA | NO. OF ITEMS NA

TITLE: TRANSITION PIECE FAB AND MACH - COMB

CARD CODE

DRAWING NO. 0-351-09-91019 REV 00

SHT. No 01 NO OF SHT. 03

GENERAL DIMENSIONAL LIMITS,FITS & TOLERANCES AS PER HY0230261

DATUM	ZONE	SHEET
D	F8	4
C	E3	2
B	B6	2
A	G5	2

THIRD ANGLE PROJECTION

REV.	DATE	ALTERED	CHD/APPD

ZONE

SIGN. AND DATE | REF. BRG. NO. 0351090101-S01-R00 | COMPUTER FILE NAME | INVENTORY NO

THIRD ANGLE PROJECTION

SH. 02 OF 06 DRG. NO 0-351-09-91019

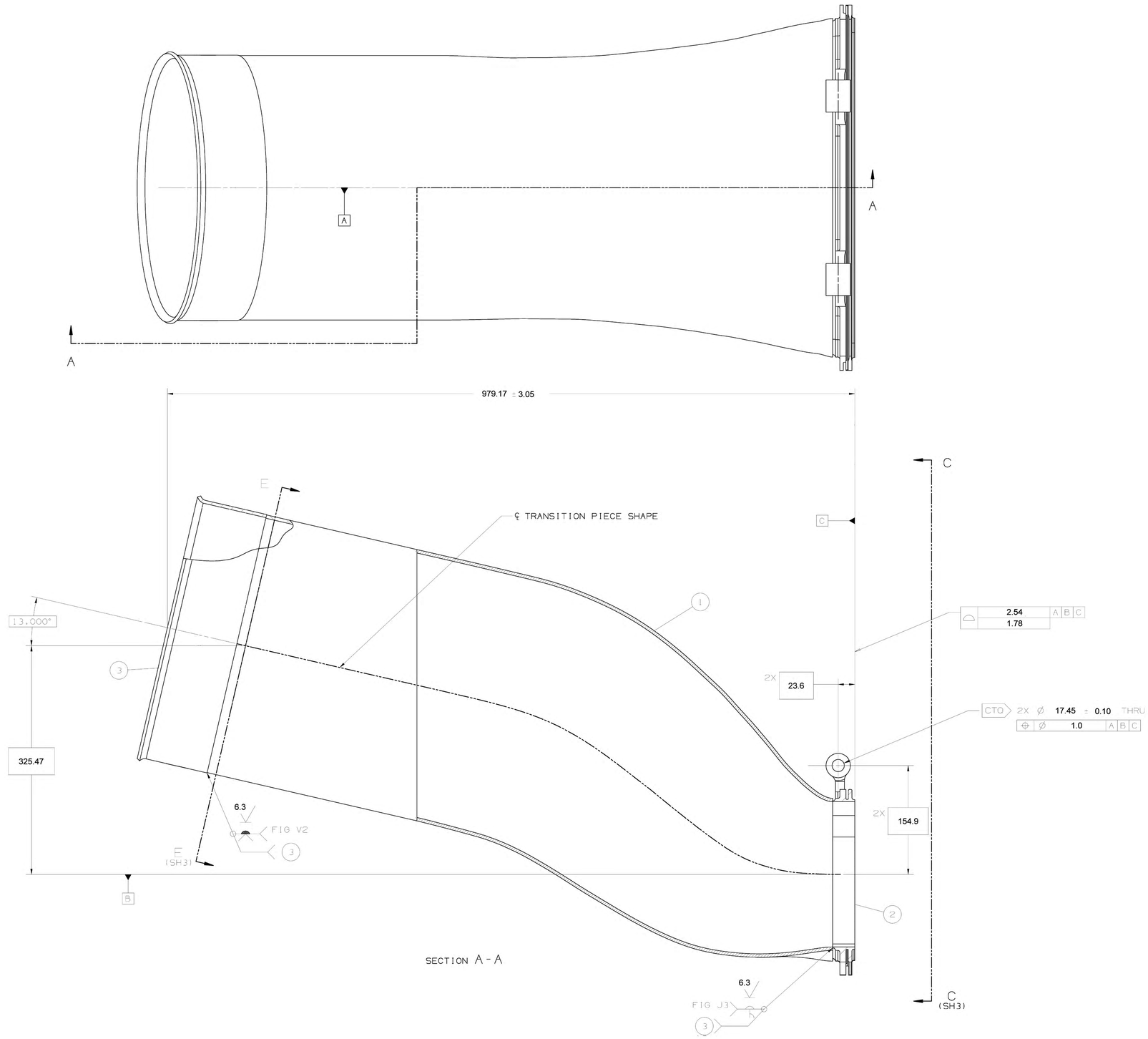

SECTION A - A

THE INFORMATION ON THIS DOCUMENT IS THE PROPERTY OF BHARAT HEAVY ELECTRICALS LIMITED. IT MUST NOT BE USED DIRECTLY OR INDIRECTLY IN ANY WAY DETRIMENTAL TO THE INTEREST OF THE COMPANY

GENERAL DIMENSIONAL LIMITS,FITS & TOLERANCES AS PER HY0230261

SIGN. AND DATE | REF. DRG. NO. | COMPUTER FILE NAME | 0-351-09-91019-S02-R00

INVENTORY NO

REV.	DATE	ALTERED	CHD/APPD

TYPE OF PRODUCT OR NAME OF CUSTOMER/PROJECT: FR 9E

BHARAT HEAVY ELECTRICALS LIMITED, HYDERABAD

	NAME	SIGN.	DATE	NO. OF VAR.
DRN.	KSR		09.11.20	NA
CHD.	RAVI		09.11.20	
APPD.	MSK		09.11.20	

DEPT. CODE: GTD | CARD CODE: 423 | UNTOL. DIMS. GR: B/N/F | SCALE: NTS | WEIGHT (KG): | REF. TO ASSY. DRG.: | ITEM NO.: NA | NO. OF ITEMS: NA

TITLE: TRANSITION PIECE FAB AND MACH - COMB

DRAWING NO.: 0-351-09-91019 | REV: 00

SHT. No 02 | NO OF SHT. 03

THIRD ANGLE PROJECTION

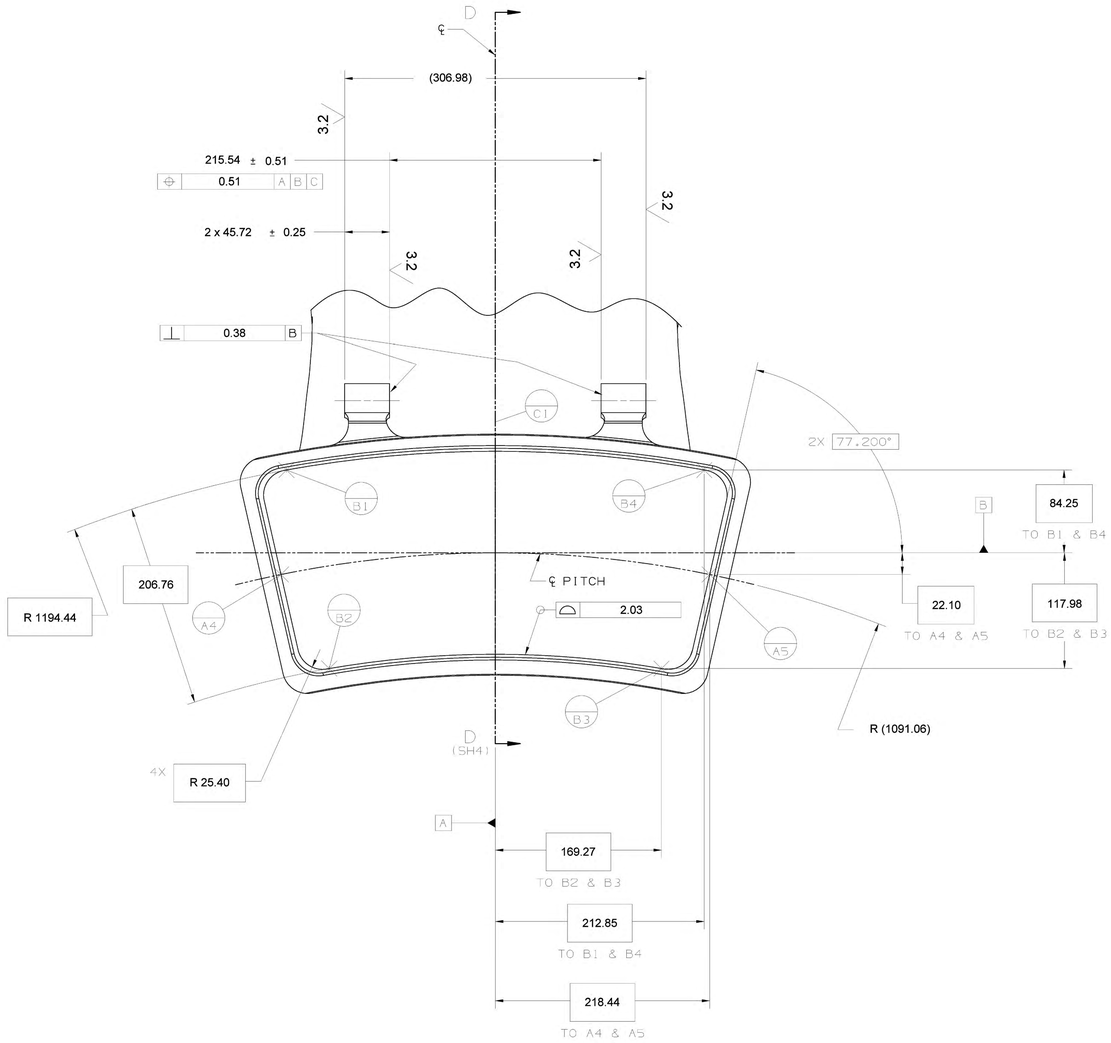

VIEW C-C (B2, SH2)

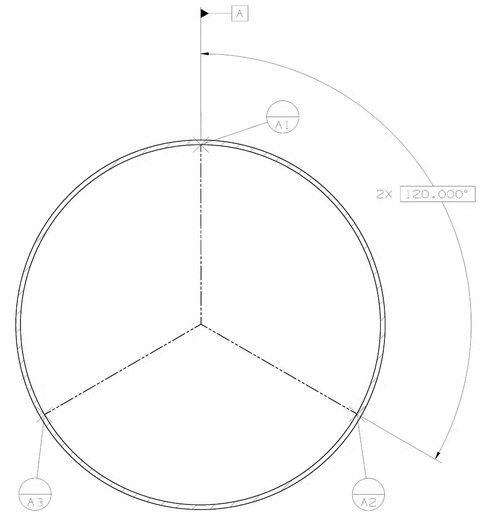

SECTION E-E (B6, SH2)
ROTATED 13° CCW

THE INFORMATION ON THIS DOCUMENT IS THE PROPERTY OF BHARAT HEAVY ELECTRICALS LIMITED. IT MUST NOT BE USED DIRECTLY OR INDIRECTLY IN ANY WAY DETRIMENTAL TO THE INTEREST OF THE COMPANY

GENERAL DIMENSIONAL LIMITS,FITS & TOLERANCES AS PER HY0230261

COMPUTER FILE NAME: 0351090101-SG0-R00

REF. DRG. 0351090101-SG0-R00

SIGN. AND DATE

INVENTORY NO

REV.	DATE	ALTERED	REV.	DATE	ALTERED	REV.	DATE	ALTERED	REV.	DATE	ALTERED	REV.	DATE	ALTERED	REV.	DATE	ALTERED	REV.	DATE	ALTERED	REV.	DATE	ALTERED	REV.	DATE	ALTERED	REV.	DATE	ALTERED	REV.	DATE	ALTERED -
		CHD/APPD			CHD/APPD			CHD/APPD			CHD/APPD			CHD/APPD			CHD/APPD			CHD/APPD			CHD/APPD			CHD/APPD			CHD/APPD		CHD/APPD -
ZONE			ZONE			ZONE			ZONE			ZONE			ZONE			ZONE			ZONE			ZONE			ZONE			ZONE		

TYPE OF PRODUCT OR NAME OF CUSTOMER/PROJECT: FR 9E

BHARAT HEAVY ELECTRICALS LIMITED
HYDERABAD

	NAME	SIGN.	DATE	NO. OF VAR.
DRN.	KSR		09.11.20	NA
CHD.	RAVI		09.11.20	
APPD.	MSK		09.11.20	

DEPT. CTD CODE	UNTOL. DIMS. GR.	SCALE	WEIGHT (KG)	REF. TO ASSY. DRG.	ITEM NO.	NO. OF ITEMS
423	8/N/1	NTS			NA	NA

TITLE: TRANSITION PIECE FAB AND MACH - COMB

CARD CODE

DRAWING NO. 0-351-09-91019 REV 00

SHT. No 03 NO OF SHT. 03