DRAWING NO. 2-55-216-00383

SANTOSH KUMAR , MATERIAL P , 27/04/16 , PRINT REQUESTED

ALL DIMENSIONS ARE IN MILLIMETRES

FOR PRODUCTION
REF. PR:QA:590 FOR PAINTING
REF. PR:QA:500 FOR UNTOL. DIMNS.
REF. APPLICABLE GMS FOR MATCODE&SPEC.

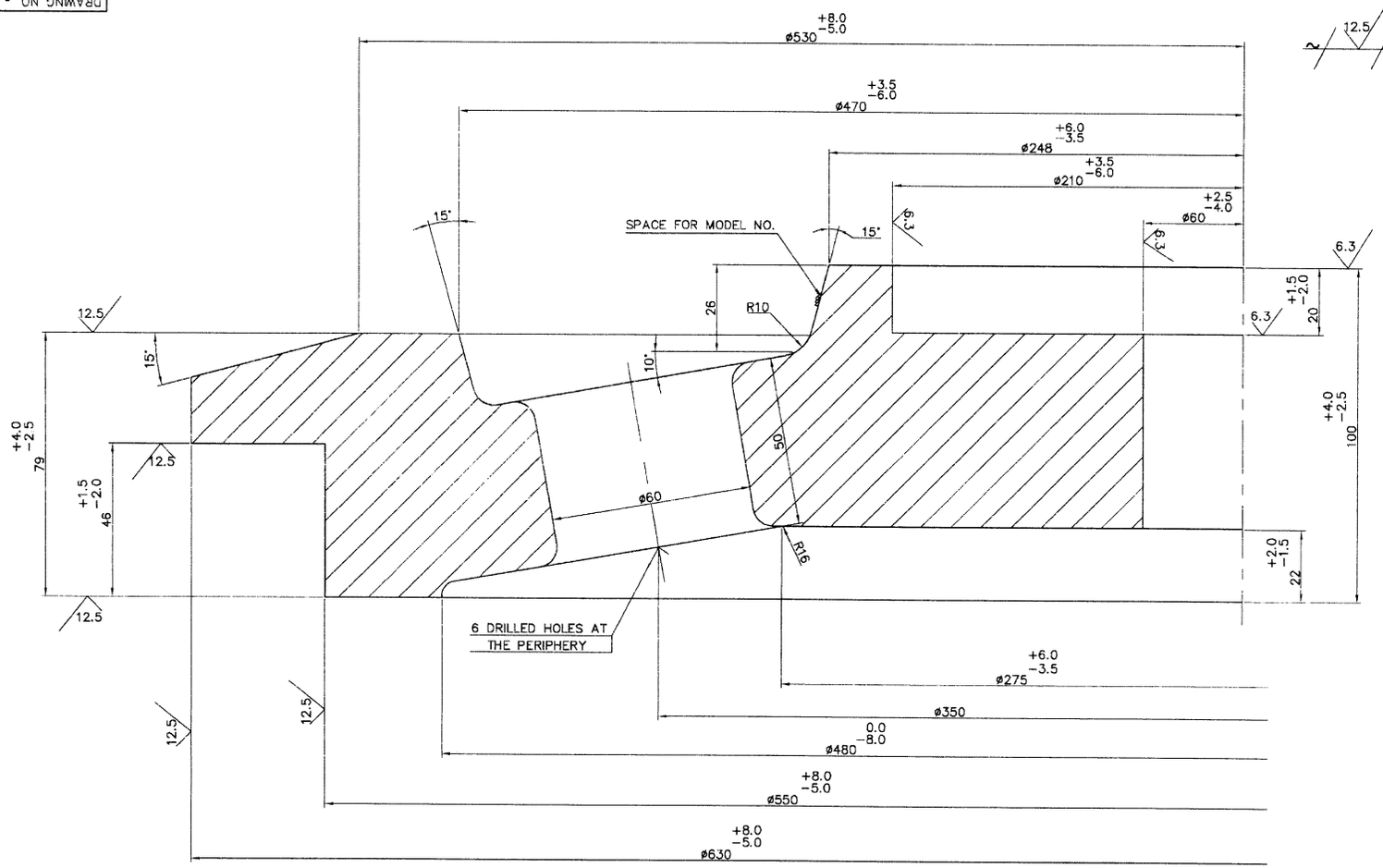

NOTES:-

01. UNSPECIFIED RADII ARE 6mm
02. PERMISSIBLE DEVIATIONS ARE AS PER DIN 1685 TOLERANCE CLASS-B

VAR NO	ITEM NO	DESCRIPTION	CAT	DRAWING No.	ITEM NO / VAR NO	MATL CODE / MATL SPECN	A/D C	UNIT / DI	UNIT WT / QTY	GS	ZONE
						GGG-40					

REV	DATE	ALTERED P.SHAKI.O/L
01	15.03.13	CHECKED K.C.B
ZONE		DRAWING RETRACED ON DT.15.03.13

CAUTION: The information on this document is the property of BHARAT HEAVY ELECTRICALS LTD. It must not be used directly or indirectly in any way detrimental to the interest of the company.

TYPE OF PRODUCT
OR NAME OF
CUSTOMER/PROJECT

DRAWN BY : P.SHAKI.O/L
CHECKED BY : K.C.B DT. 15.03.2013
APPROVED BY: K.K.N

BHARAT HEAVY ELECTRICALS LTD.,
UNIT: BOILER AUXILIARIES PLANT,
RANIPET – 632 406.

	NAME	SIGN	DATE	NO.OF VAR.
DRN	BDC	–Sd–		
CHD		–Sd–		
APPD		–Sd–		

DEPT	GRADE OF UNTOL.DIM	SCALE	WEIGHT (KG).	REF. TO ASSY/OLD DRG.	ITEM NO	NO. OF ITEMS
FANS		1:1	106.000	1606 437 5390 (3)		
CODE 864	PR: QA: 500					

TITLE	CARD CODE	DRAWING NO.	REV
ADJUSTING DISC-CASTING (ROUGH TURNED)	U 01	2-55-216-00383	01

Size A2