DRAWING NO. 0-00-022-75676

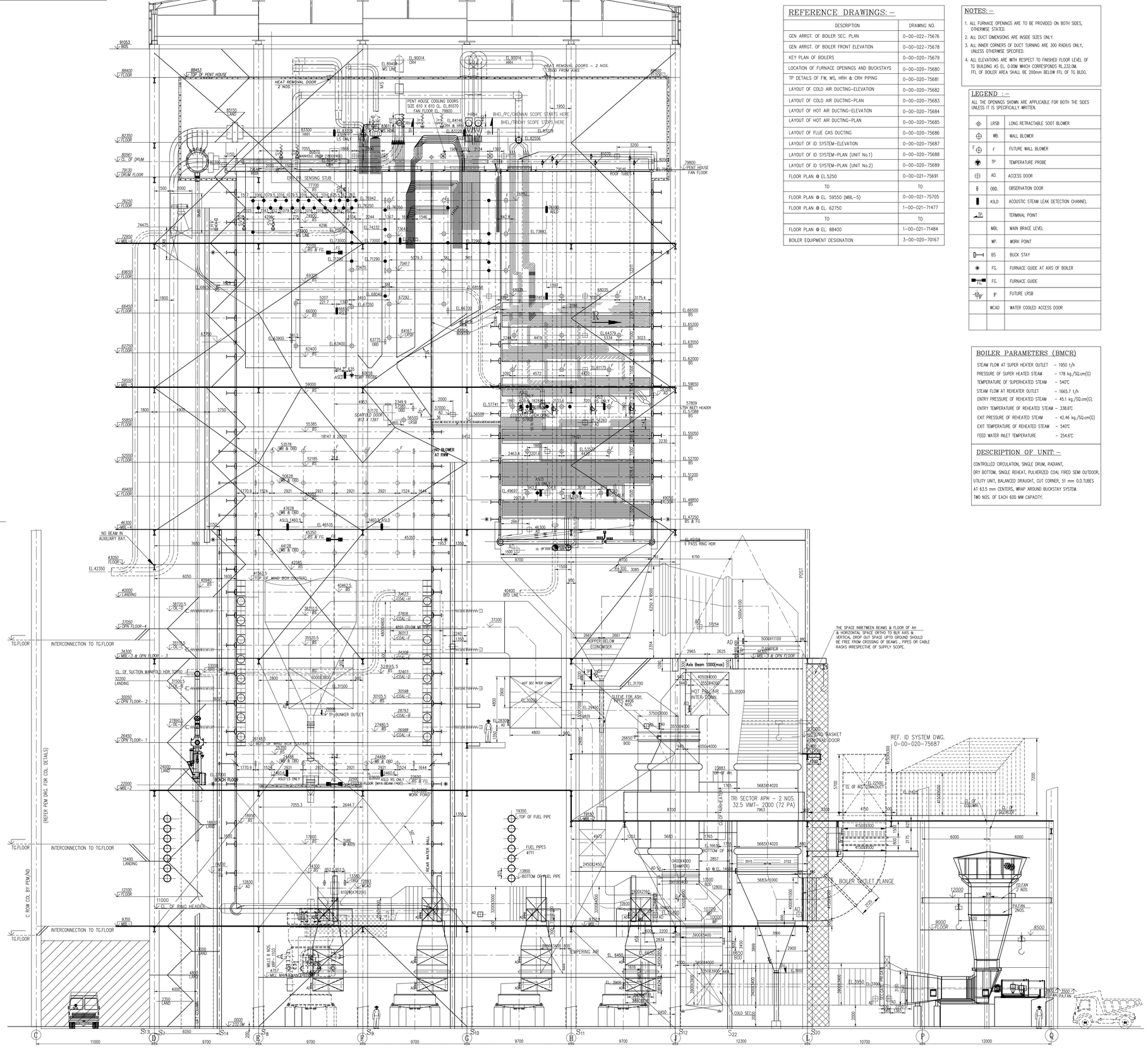

GA OF BOILER SECTIONAL SIDE ELEVATION

REFERENCE DRAWINGS: –

DESCRIPTION	DRAWING NO.
GEN ARRGT. OF BOILER SEC. PLAN	0-00-022-75676
GEN ARRGT. OF BOILER FRONT ELEVATION	0-00-022-75678
KEY PLAN OF BOILERS	0-00-020-75679
LOCATION OF FURNACE OPENINGS AND BUCKSTAYS	0-00-020-75680
TP DETAILS OF FW, MS, HRH & CRH PIPING	0-00-020-75681
LAYOUT OF COLD AIR DUCTING–ELEVATION	0-00-020-75682
LAYOUT OF COLD AIR DUCTING–PLAN	0-00-020-75683
LAYOUT OF HOT AIR DUCTING–ELEVATION	0-00-020-75684
LAYOUT OF HOT AIR DUCTING–PLAN	0-00-020-75685
LAYOUT OF FLUE GAS DUCTING	0-00-020-75686
LAYOUT OF ID SYSTEM–ELEVATION	0-00-020-75687
LAYOUT OF ID SYSTEM–PLAN (UNIT No.1)	0-00-020-75688
LAYOUT OF ID SYSTEM–PLAN (UNIT No.2)	0-00-020-75689
FLOOR PLAN @ EL.5250	0-00-021-75691
TO	TO
FLOOR PLAN @ EL. 59550 (MBL–5)	0-00-021-75705
FLOOR PLAN @ EL. 62750	1-00-021-71477
TO	TO
FLOOR PLAN @ EL. 88400	1-00-021-71484
BOILER EQUIPMENT DESIGNATION	3-00-020-70167

NOTES: –

1. ALL FURNACE OPENINGS ARE TO BE PROVIDED ON BOTH SIDES, OTHERWISE STATED.
2. ALL DUCT DIMENSIONS ARE INSIDE SIZES ONLY.
3. ALL INNER CORNERS OF DUCT TURNING ARE 300 RADIUS ONLY, UNLESS OTHERWISE SPECIFIED.
4. ALL ELEVATIONS ARE WITH RESPECT TO FINISHED FLOOR LEVEL OF TG BUILDING AS EL. 0.00M WHICH CORRESPONDS RL.232.0M. FFL OF BOILER AREA SHALL BE 200mm BELOW FFL OF TG BLDG.

LEGEND : –

ALL THE OPENINGS SHOWN ARE APPLICABLE FOR BOTH THE SIDES UNLESS IT IS SPECIFICALLY WRITTEN.

	LRSB	LONG RETRACTABLE SOOT BLOWER
	WBL	WALL BLOWER
F	F	FUTURE WALL BLOWER
	TP	TEMPERATURE PROBE
	AD.	ACCESS DOOR
	OBD.	OBSERVATION DOOR
	ASLD	ACOUSTIC STEAM LEAK DETECTION CHANNEL
TP		TERMINAL POINT
	MBL	MAIN BRACE LEVEL
	WP.	WORK POINT
	BS	BUCK STAY
	FG.	FURNACE GUIDE AT AXIS OF BOILER
FG	FG.	FURNACE GUIDE
F TP	F	FUTURE LRSB
	WCAD	WATER COOLED ACCESS DOOR

BOILER PARAMETERS (BMCR)

STEAM FLOW AT SUPER HEATER OUTLET	– 1950 t/h
PRESSURE OF SUPER HEATED STEAM	– 178 kg./SQ.cm(G)
TEMPERATURE OF SUPERHEATED STEAM	– 540℃
STEAM FLOW AT REHEATER OUTLET	– 1665.7 t/h
ENTRY PRESSURE OF REHEATED STEAM	– 45.1 kg./SQ.cm(G).
ENTRY TEMPERATURE OF REHEATED STEAM	– 338.6℃
EXIT PRESSURE OF REHEATED STEAM	– 42.46 kg./SQ.cm(G)
EXIT TEMPERATURE OF REHEATED STEAM	– 540℃
FEED WATER INLET TEMPERATURE	– 254.6℃

DESCRIPTION OF UNIT: –

CONTROLLED CIRCULATION, SINGLE DRUM, RADIANT, DRY BOTTOM, SINGLE REHEAT, PULVERIZED COAL FIRED SEMI OUTDOOR, UTILITY UNIT, BALANCED DRAUGHT, CUT CORNER, 51 mm O.D.TUBES AT 63.5 mm CENTERS, WRAP AROUND BUCKSTAY SYSTEM. TWO NOS. OF EACH 600 MW CAPACITY.

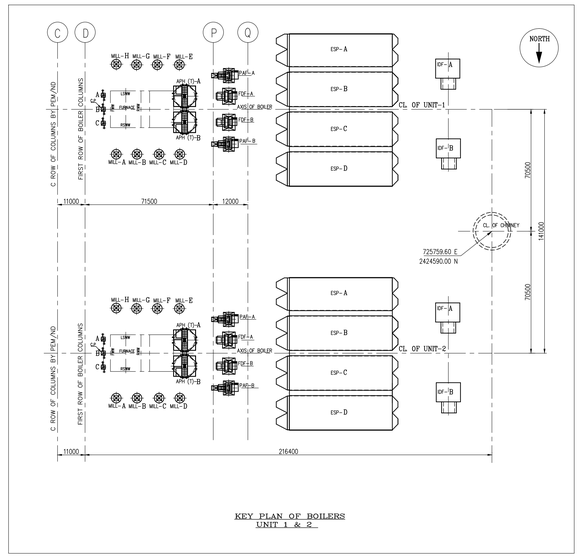

KEY PLAN OF BOILERS
UNIT 1 & 2

CUSTOMER NO. 1615, 1616

CUSTOMER: D.B. POWER LIMITED, GURGAON, HARYANA

CONSULTANT: DEVELOPMENT CONSULTANT PRIVATE LTD., KOLKATA

PROJECT: D.B. SUPER THERMAL POWER PROJECT 2 X 600MW
Village: Baradarha, District: Janjgir-Champa
Chhattisgarh - India

BHARAT HEAVY ELECTRICALS LTD
BOILER PLANT, TIRUCHIRAPALLI –620014

	NAME	SIGN	DATE	DEPT CODE
DRAWN	S.MOHANRAJ	Sd...	14–09–2010	M
CHECKED	S.SRINIVASAN	Sd...	14–09–2010	
APPROVED	G.VEERAMANI	Sd...	14–09–2010	

ALL DIMENSIONS IN MILLIMETRE

PROJECTION

SCALE 1:125

TITLE: GENERAL ARRANGEMENT OF BOILER SECTIONAL SIDE ELEVATION

DRG No. 0-00-022-75676

REV 00

CAUTION: THE DRAWING IS THE PROPERTY OF BHARAT HEAVY ELECTRICALS LTD., AND IS NOT TO BE REPRODUCED OR USED TO ENTICE BIDDERS OR FOR ANY OTHER PURPOSE OTHER THAN WHERE PROVIDED OR AGREED TO BY BHARAT HEAVY ELECTRICALS LTD.

DRAWING NO. 0-00-022-75677

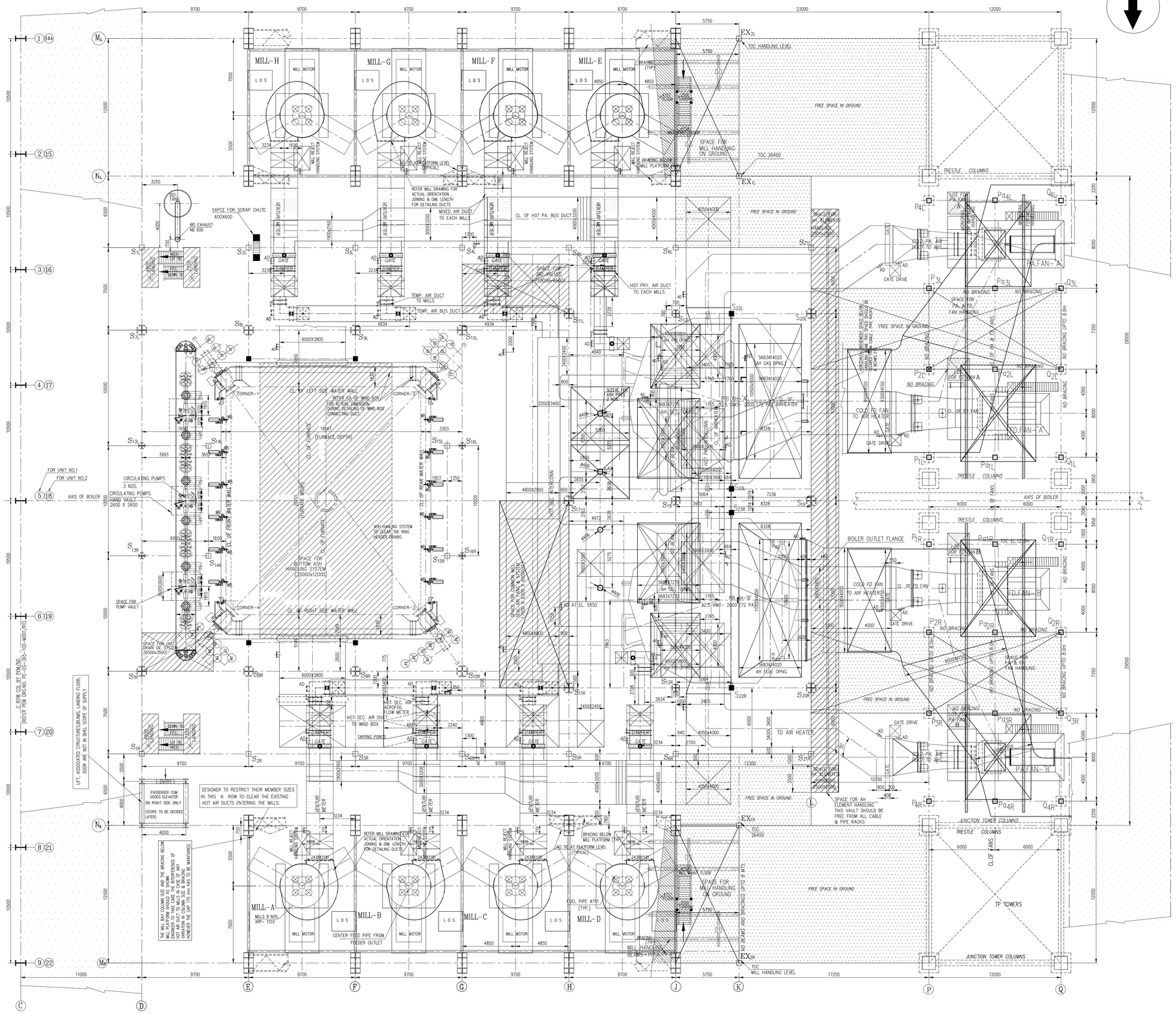
NORTH
MILL-H
MILL-G
MILL-F
MILL-E
MILL-A
MILL-B
MILL-C
MILL-D
MILL MOTOR
L O S
WELL BEAT HANDLING SYSTEM
TOC HANDLING LEVEL
FREE SPACE IN GROUND
SPACE FOR MILL HANDLING ON GROUND
TOC 26450
TRESTLE COLUMNS
SAPCE FOR SCRAP CHUTE 600X600
IBD TANK
IBD EXHAUST NB 600
REFER MILL DRAWING FOR ACTUAL ORIENTATION , JOINING & DIM. LENGTH FOR DETAILING DUCTS
MIXED AIR DUCT TO EACH MILLS
CL. OF HOT PA. BUS DUCT
HOT PRY. AIR DUCT TO EACH MILLS
TEMP. AIR DUCT TO MILLS
TEMP. AIR BUS DUCT
CL. OF LEFT SIDE WATER WALL
CL. OF RIGHT SIDE WATER WALL
CL. OF FRONT WATER WALL
CL. OF FURNACE
FURNACE HEIGHT
SPACE FOR BOTTOM ASH HANDLING SYSTEM (25000x12000)
ASH HANDLING SYSTEM DO GEAR THE RING HEADER DRAINS
FOR UNIT NO.1
FOR UNIT NO.2
AXIS OF BOILER
CIRCULATING PUMPS 3 NOS.
CIRCULATING PUMPS HAND VAULT 2600 X 2600
SPACE FOR PUMP VAULT
SPACE FOR UNIT DRAIN OIL SYSTEM (6500x3500)
C ROW COL BY PFM/ND (REFER PFM DRGND. PE-DG-365-105-M00/R0)
UFT. ASSOCIATED STRUCTURES,BEAMS, LANDING FLOOR, DOOR ARE NOT IN BHEL SCOPE OF SUPPLY
PASSENGER CUM GOODS ELEVATOR ON RIGHT SIDE ONLY (SCOPE TO BE DECIDED LATER)
DESIGNER TO RESTRICT THEIR MEMBER SIZES IN THIS N ROW TO CLEAR THE EXISTING HOT AIR DUCTS ENTERING THE MILLS.
THE MILL BAY COLUMN SIZE AND THE BRACING BELOW MILL PLATFORM SHOULD AS SHOWN IN THIS DRAWING. ANY INTERFERENCE OF HOT AIR DUCT TO MILLS IN CASE OF ANY MODIFICATION IN MILL BAY SIZE, HOWEVER THE GAP 75mm HAS TO BE MAINTAINED.
HOT SEC. AIR AEROFOIL FLOW METER
HOT SEC. AIR DUCT TO WIND BOX
TAPPING POINTS
REFER MILL DRAWING FOR ACTUAL ORIENTATION , JOINING & DIM. LENGTH FOR DETAILING DUCTS
BRACING BELOW MILL PLATFORM (TYP)
NO BRACING
FUEL PIPE Ø711 (TYP.)
CENTER FEED PIPE FROM FEEDER OUTLET
MILL HANDLING BEAMS-TYP.
NO BEAMS AND BRACINGS UPTO 8.0MTS
FREE SPACE IN GROUND
SPACE FOR AH ELEMENT HANDLING THIS VAULT SHOULD BE FREE FROM ALL CABLE & PIPE RACKS
JUNCTION TOWER COLUMNS
TP TOWERS
BOILER OUTLET FLANGE
COLD PA. AIR DUCT TO AH
COLD FD FAN TO AIR HEATER
TO AIR HEATER
PA FAN-'A'
PA FAN-'B'
FD FAN-'A'
FD FAN-'B'
NO BRACING UPTO 8.0m
SPACE FOR PA & FD FANS FAN HANDLING
GATE DRIVE
AH SEC. OPNG.
AH PRI. OPNG.
AH EGC OPNG.
ESP INLET
ESP OUTLET
ID FAN
HOT SEC. AIR DUCT TO ESP
HOT PRI. AIR DUCT TO ESP
HOT SEC. AIR DUCT TO ID FAN
HOT PRI. AIR DUCT TO ID FAN
ID FAN OUTLET DUCT TO CHIMNEY
CL. OF AH
CL. OF AIR HEATER
CL. OF ID FAN
CL. OF FANS
AXIS OF BOILER
TOC EL. 12200
TOC EL. 29500
TOC 26450
TOC MILL HANDLING LEVEL
EX2L
EX1L
EX1R
EX3R
EX2R
EX4R
EX3L
EX4L
P4L
Pa4L
Q4L
P3L
Pa3L
Q3L
P2L
Pa2L
Q2L
P1L
Pa1L
Q1L
P1R
Pa1R
Q1R
P2R
Pa2R
Q2R
P3R
Pa3R
Q3R
P4R
Pa4R
Q4R
S1L
S2L
S3L
S4L
S5L
S6L
S7L
S8L
S9L
S10L
S11L
S12L
S13L
S14L
S15L
S16L
S17L
S18L
S19L
S20L
S21L
S22L
S23L
S1R
S2R
S3R
S4R
S5R
S6R
S7R
S8R
S9R
S10R
S11R
S12R
S13R
S14R
S15R
S16R
S17R
S18R
S19R
S20R
S21R
S22R
S23R
S24R
CORNER-1
CORNER-2
CORNER-3
CORNER-4
ENTRY
EXIT
DOWN TO TPRL
UP TO MILL TOP
LANDING
9700
23000
12000
5750
29500
17250
11000
6000
4850
4000
7000
12500
10500
7500
6500
2200
8000
7250
4000
3950
2000
1950
1350
1300
2500
2600
3250
3234
1600
1765
1400
1300
2240
2834
3400
3972
4972
5064
7236
8328
9500
10700
12300
14000
18147
(FURNACE DEPTH)
3993
3303
1953
6000X3800
4934
4940
2050X3400
4800X2900
5300X4000
5600X4050
5683X14020
AH SEC. OPNG.
AH PRI. OPNG.
AH EGC OPNG.
32.5 VMT- 2000 / 72 PAD
PRI. AH - 'A'
PRI. AH - 'B'
SLEEVE FOR ASH PIPE & BOX
SPACE FOR DUMMY MILL FOOD & BUNK BUNKER
SPACE FOR ESP HOPPER
SPACE FOR ID FAN
SPACE FOR AH
SPACE FOR ESP
SPACE FOR ESP HOPPER
SPACE FOR ESP HOPPER
SPACE FOR ESP HOPPER