DRAWING NO. 2-V-0000-20267

ALL DIMENSIONS ARE IN MILLIMETRES. FOR TOLERANCES OF UNTOLERANCED DIMENSIONS DURING MANUFACTURE REFER RELEVANT QCP / QP

SL No.	DRAWING NUMBER	FLANGE RATINGS	END CAP SIZE (mm)	MATERIAL SPECIFICATION	MATERIAL CODE	DIMENSIONS (mm) ØA	ØB	ØC			Wt / kg	REMARKS
01	2-V-4124-20267 /0	2-1/16" - 2M, 3M, 5M, 10M, 15M	50	LINEAR LOW DENSITY POLYETHYLENE (COLOUR : BLUE)	96 469 974 0000	122	56	43.4			0.001	
02	2-V-4592-20267 /0	2-9/16" - 2M, 3M, 5M, 10M, 15M	65		96 469 975 0000	144	69	62			0.002	
03	2-V-4134-20267 /0	3-1/8" - 2M, 3M, 5M, 10M, 15M	80		96 469 976 0000	159	83	73			0.003	
04	2-V-4778-20267 /0	4-1/16" - 2M, 3M, 5M, 10M, 15M	100		96 469 977 0000	192.5	105	97.6			0.005	
05	2-V-4L14-20267 /0	5-1/8" - 2M, 3M, 5M, 10M, 15M	130		96 469 978 0000	260	156	135			0.007	

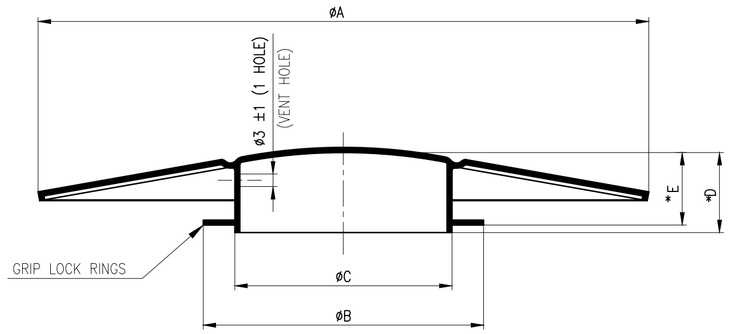

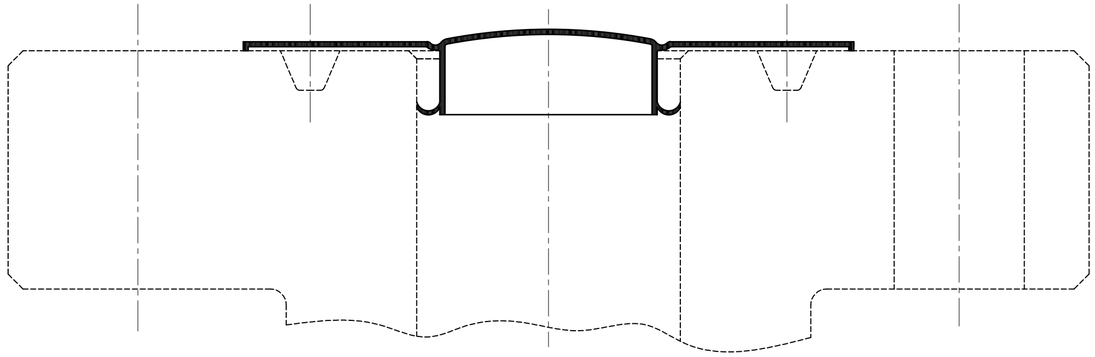

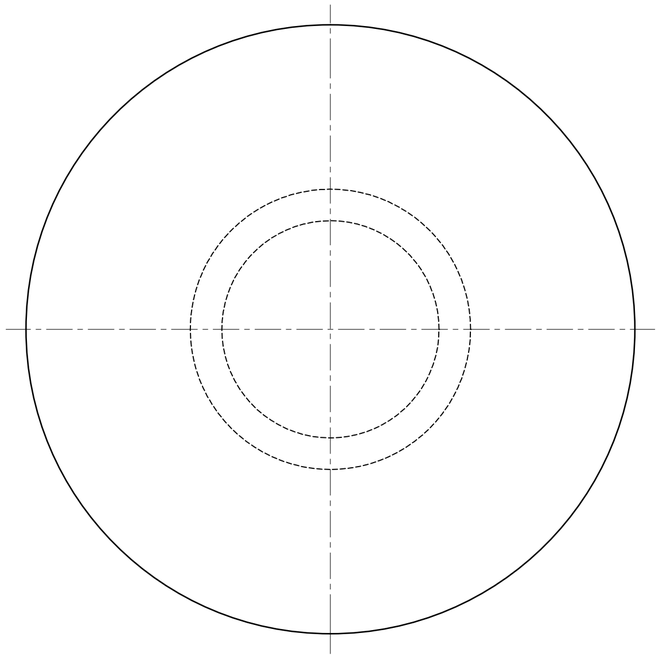

END CAP ASSY DETAILS

NOTES:

* 1. ALL OTHER DIMENSIONS & DETAILS (ie, THICKNESS, FINSHING, DIMANSIONS E & D, RADIUS AND ANGLE) AS PER SUPPLIER'S SCOPE.

2. TEST CERTIFICATE FOR END COVERS SHOULD BE PROVIDED.

MINIMUM REQUIRED PROPERTIES :

PROPERTY	TEST METHOD	UNIT	TYPICAL VALUE
DENSITY (23°C)	ASTM D 1505	g/cc	0.926
MFI (190ø / 2.19kg)	ASTM D 1238	g/10 min	50
TENSILE YIELD STRENGTH	ASTM D 638	MPa	11.5
ELONGATION AT BREAK	ASTM D 638	%	600
FLEXURAL MODULUS	ASTM D 790	MPa	250
FLEXURAL MODULUS	ASTM D 1525	°C	97

APPLICATIONS :

END CAPS ARE USED TO PROTECT THE BODY SEALING GROOVE AREA FROM CONTAMINATIONS OF ENVIRONMENT.

DCP No.	ALTERED	APPD
	CHD	DATE
REV		
ZONE		

CAUTION: The information on this document is the property of BHARAT HEAVY ELECTRICALS LTD. It must not be used directly or indirectly in any way detrimental to the interest of the company.

No OFF	DESCRIPTION	MATL CODE	MATL SPECN	HEAT TREATMENT	SCRAP SORT	NET WT (kg)	GROSS WT (kg)	DRAWING No	ITEM No

TYPE OF PRODUCT OR NAME OF CUSTOMER/PROJECT: FOR OFE FLANGES

BHARAT HEAVY ELECTRICALS LTD.,
UNIT: HIGH PRESSURE BOILER PLANT.
TIRUCHIRAPALLI -620014.
365-120

	NAME	SIGN	DATE	NO.OF VAR.
DRN	R.NATARAJAN	R.N	20-08-2016	
CHD	P.ARUNKUMAR	P.A	20-08-2016	
APPD	R.ELAYARAJA	R.E	20-08-2016	

DEPT VL
CODE 340
OFE
SCALE N T S
WEIGHT (KG).
REFERENCE INFORMATIONS ——
NO. OF ITEMS

TITLE: FLANGE END CAP (PLASTIC)
CARD CODE: U 01
DRAWING NO. 2-V-0000-20267
REV 0

Size A2