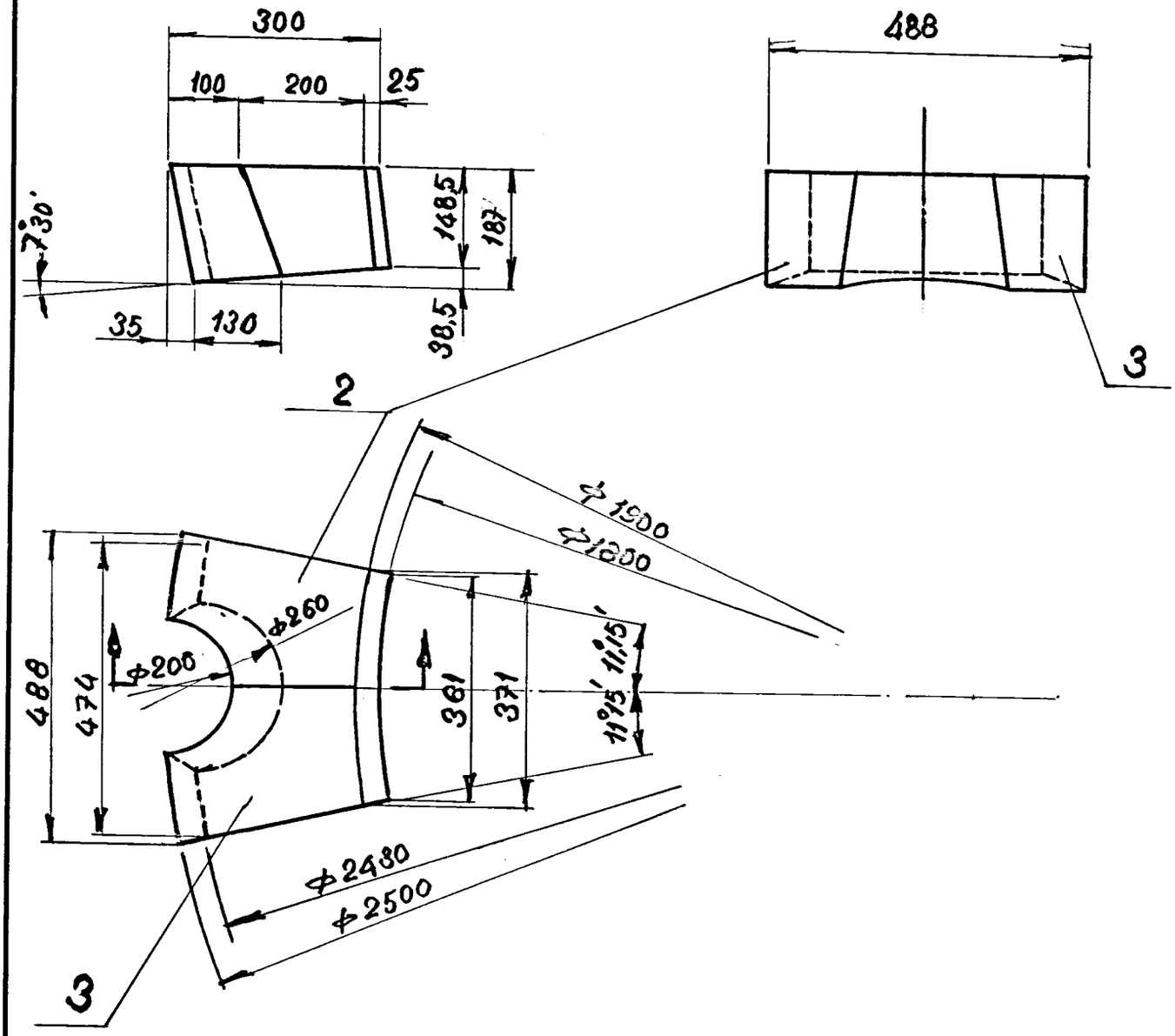

NO. OF PIECES	DESCRIPTION	SEMI PRODUCT	FINAL MATERIAL	INITIAL MATERIAL	SCRAP SORT	NET wt	GROSS wt	DRAWING NO.	ITEM NO.
8+8			FIRE CLAY 15:8			18,8 / 18,8	kg	1-11-20b-0222	3 / 2

REMARKS: Material according to MR 7

TOTAL NET wt (kg) CC:00 EC:07

SCALE			REFERENCE
1:10	DRAWN	KUB / TCD / S. Pandian 9.7.71	101493
	CHECKED		
	APPROVED		
	STDS. OFFICER		
	DATE	23-4-68	

ALTERATIONS	DATE	SIGNATURE	ALTERATION INDEX

MACHINE: PRODUCER GAS PLANT

TYPE: 4513:01

INV. NO.

TITLE:

SHAPED BRICK

DRAWING NO: 4-M-20B-2908 07

NO. OF SHEETS

SHEET NO: