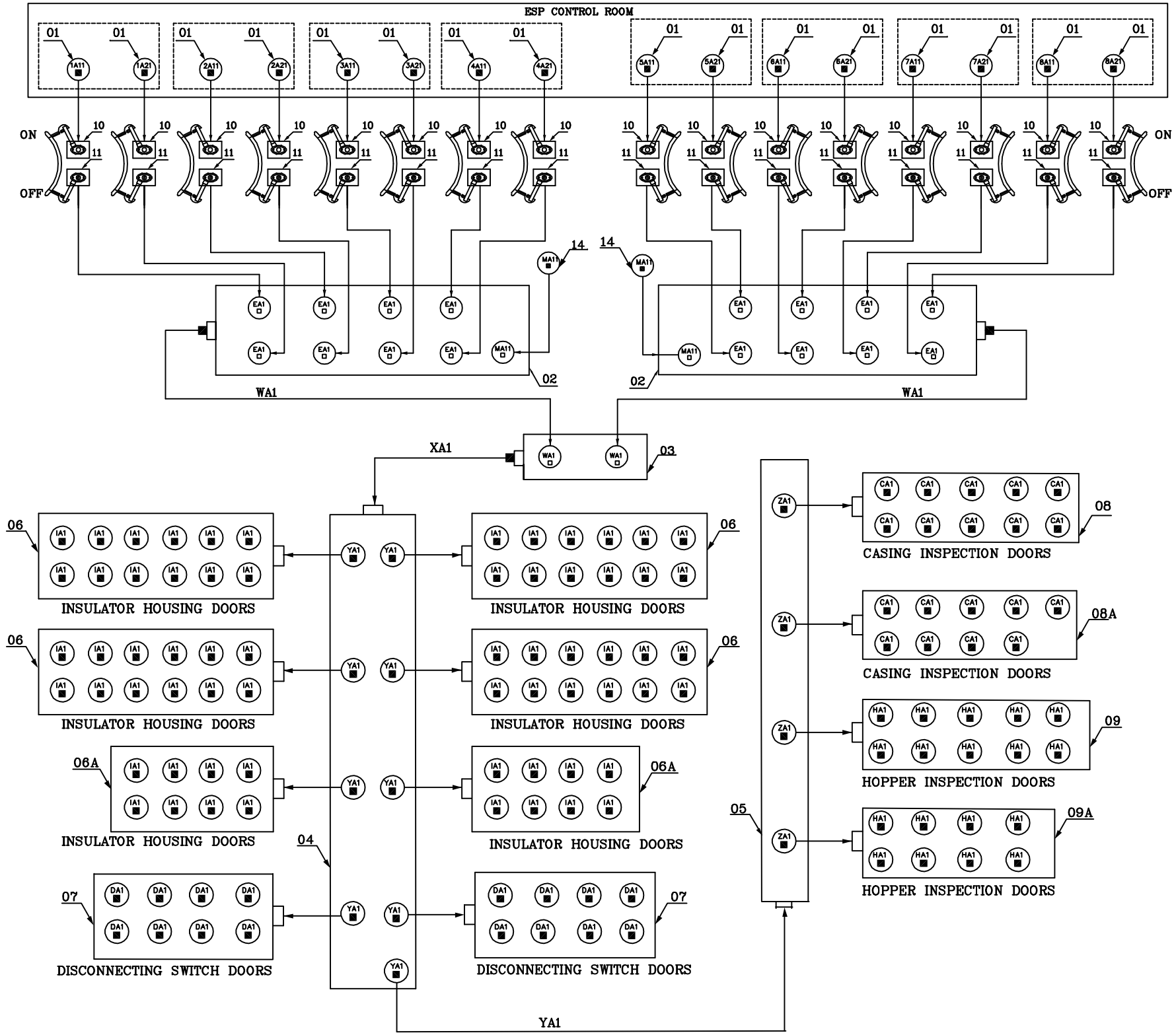

NOTE: –

ALL DIMENSIONS ARE IN MILLIMETRES

01. ALL LOCKS AND KEY EXCHANGE BOXES SHALL BE SUITABLE FOR OUTDOOR CONDITION.
02. ITEM NO.11 INTER LOCK WITHOUT KEY MAY BE SUPPLIED WITH BASIC LETTERS AS BELOW.
    16 NUMBERS EACH AS 1A11 TO 8A11 AND 1A21 TO 8A21
    64 NUMBERS AS IA1 19 NUMBERS AS CA1
    18 NUMBERS AS HA1 16 NUMBERS AS DA1
03. ITEM NO.11 INTER LOCK WITH KEY MAY BE SUPPLIED WITH BASIC LETTERS 16 NUMBERS AS EA1.
04. FOR THE DETAILS OF ITEM NO. 11 REFER DRAWING NO. 3–00–119–26291 REV 01.
05. THE SCHEME OF INTERLOCKING IS DRAWN FOR THE FOLLOWING CONDITIONS.
    ALL RECTIFIER TRANSFORMERS ARE ENERGISED.
    ALL DISCONNECTING SWITCHES ARE ON.
    ALL ACCESSIBLE INSPECTION DOORS OF EP ARE CLOSED.
06. ITEM NO. 12 IS NOT SHOWN IN THIS DRAWING.
07. THE DIRECTION OF ARROW RIGHT FROM THE TOP INDICATES THE SEQUENCE OF STEPS TO BE FOLLOWED IN THE SAME ORDER FOR OPENING THE INSULATOR HOUSING,HOPPER, CASING INSPECTION DOORS AND DISCONNECTING SWITCH DOORS.
08. USE OF MASTER KEY DURING NORMAL CONDITION IS STRICTLY PROHIBITED.
09. SPRING LOADED METAL CAPS SHALL BE PROVIDED AS AN INTEGRAL PART OF ALL INTERLOCKS INCLUDING ROTARY SWITCHES EXCEPT ITEM NUMBERS 02 TO 10.
10. THE KEY EXCHANGE BOXES SHALL BE ACCOMMADATED IN A SUITABLE INTERLOCK ENCLOSURE BOX WITH SUFFICIENT CLEARANCE FOR OPERATIONS. THE ENCLOSURE BOX SHALL BE DESIGNED FOR IP–55 PROTECTION. VARIOUS KEY EXCHANGE BOXES SHALL BE ACCOMMADATED IN INTERLOCK ENCLOSURE BOX AS GROUPED BELOW.
    ITEM NO. 02, 03 & 04 IN ONE BOX
    ITEM NO. 06,06A & 07 IN TWO BOXES
    ITEM NO. 05 & 08, 08A IN ONE BOX
    ITEM NO. 09 & 09A IN ONE BOX
11. THE INTERLOCKING ARRANGEMENT SHOWN IN THIS DRG. IS FOR ESP–A AND IDENTICAL FOR ESP B.
12. MAXIMUM 6 LOCKS SHALL BE PROVIDED IN A ROW IN EACH KEY EXCHANGE BOX.

ITEM	DESCRIPTION	QTY	MOUNTING LOCATION
14	ROTARY SWITCH WITH KEY 2 POLES, 415V, 5A,AC FOR BACK OF BOARD MOUNTING	02	AUXILIARY CONTROL PANEL CST MODULE DOOR
13	INTERLOCK ENCLOSURE BOX	05	ESP ROOF/WALK WAY AT COLLECTING ELECTRODE RAPPING MOTOR
12	MASTER KEY	02	LOOSE SUPPLY
11	INTERLOCK WITH KEY	16	DISCONNECTING SWITCH 'OFF' POSITION
10	INTERLOCK WITHOUT KEY	133	CASING INSPECTION DOORS, DISCONNECTING SWITCH DOORS,DISCONNECTING SWITCH 'ON' POSITION,INSU.HOUSING DOORS AND HOPPER AND HOPPER INSPECTION DOORS.
09A	KEY BOX WITH 1 END LOCK WITHOUT KEY AND 8 FRONT LOCKS WITH KEYS	01	KEY EXCHANGE BOX ENCLOSURE AT HOPPER AREA.
09	KEY BOX WITH 1 END LOCK WITHOUT KEY AND 10 FRONT LOCKS WITH KEYS	01	KEY EXCHANGE BOX ENCLOSURE AT HOPPER AREA.
08A	KEY BOX WITH 1 END LOCK WITHOUT KEY AND 9 FRONT LOCKS WITH KEYS	01	KEY EXCHANGE BOX ENCLOSURE ON ESP ROOF.
08	KEY BOX WITH 1 END LOCK WITHOUT KEY AND 10 FRONT LOCKS WITH KEYS	01	KEY EXCHANGE BOX ENCLOSURE ON ESP ROOF.
07	KEY BOX WITH 1 END LOCK WITHOUT KEY AND 8 FRONT LOCKS WITH KEYS	02	KEY EXCHANGE BOX ENCLOSURE ON ESP ROOF.
06A	KEY BOX WITH 1 END LOCK WITHOUT KEY AND 8 FRONT LOCKS WITH KEYS	02	KEY EXCHANGE BOX ENCLOSURE ON ESP ROOF.
06	KEY BOX WITH 1 END LOCK WITHOUT KEY AND 12 FRONT LOCKS WITH KEYS	04	KEY EXCHANGE BOX ENCLOSURE ON ESP ROOF.
05	KEY BOX WITH 1 END LOCK WITHOUT KEY AND 4 FRONT LOCKS WITH KEYS	01	KEY EXCHANGE BOX ENCLOSURE AT COLLECTING ELECTRODE RAPPING MOTOR PLATFORM.
04	KEY BOX WITH 1 END LOCK WITHOUT KEY AND 9 FRONT LOCKS WITH KEYS	01	KEY EXCHANGE BOX ENCLOSURE ON ESP ROOF.
03	KEY BOX WITH 1 END LOCK WITH KEY AND 2 FRONT LOCKS WITHOUT KEYS	01	KEY EXCHANGE BOX ENCLOSURE ON ESP ROOF.
02	KEY BOX WITH 1 END LOCK WITH KEY AND 09 FRONT LOCKS WITHOUT KEYS	02	KEY EXCHANGE BOX ENCLOSURE ON ESP ROOF.
01	ROTARY SWITCH WITH KEY 2 POLES, 415V, 5A, AC FOR BACK OF BOARD MOUNTING	16	ELECTRONIC CONTROLLER DOOR

CUSTOMER NO. R177,R178,R179 & R180

ESP SIZE : FAA–1X30M+6X45M+1X37.5M–2X56165–2

KEY DIAGRAM

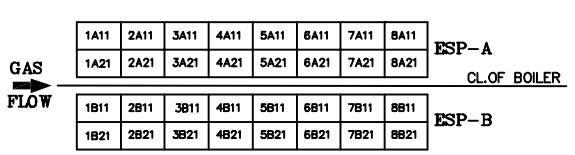

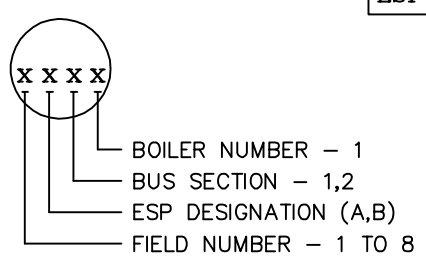

BASIC LETTER REFERENCE FOR ITEM NO 01 & 11

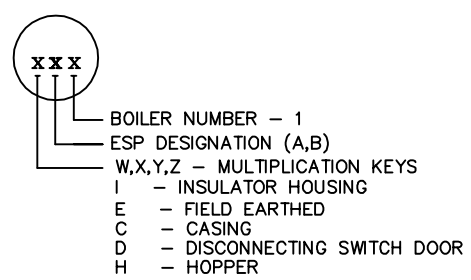

BASIC LETTER REFERENCE FOR ITEM NO 02 TO 10

CUSTOMER:	RASHTRIYA ISPAT NIGAM LTD. (RINL), VISAKHAPATNAM
PROJECT:	REVAMPING OF ESP FOR UNIT – 330TPH
	BHARAT HEAVY ELECTRICALS LTD BOILER AUXILIARY PLANT RANIPET – 632 406

COPY RIGHT AND CONFIDENTIAL
The information on this document is the property of BHARAT HEAVY ELECTRICALS LIMITED it must not be used directly or indirectly in any way detrimental to the interest of the company.

DEPT CODE		NAME	SIGN	DATE
	DRN	SGA	–	05.09.20
	CHD	GMK	–	05.09.20
	APPD	MJM	–	05.09.20

TITLE
INTERLOCKING SYSTEM FOR ESP

DEPT. SIGN SCALE

DRAWING NO. 2–00–114–30221

SHEET 1 1 OF REV. 00