FIRST ANGLE PROJECTION

ALL DIMENSIONS ARE IN mm.

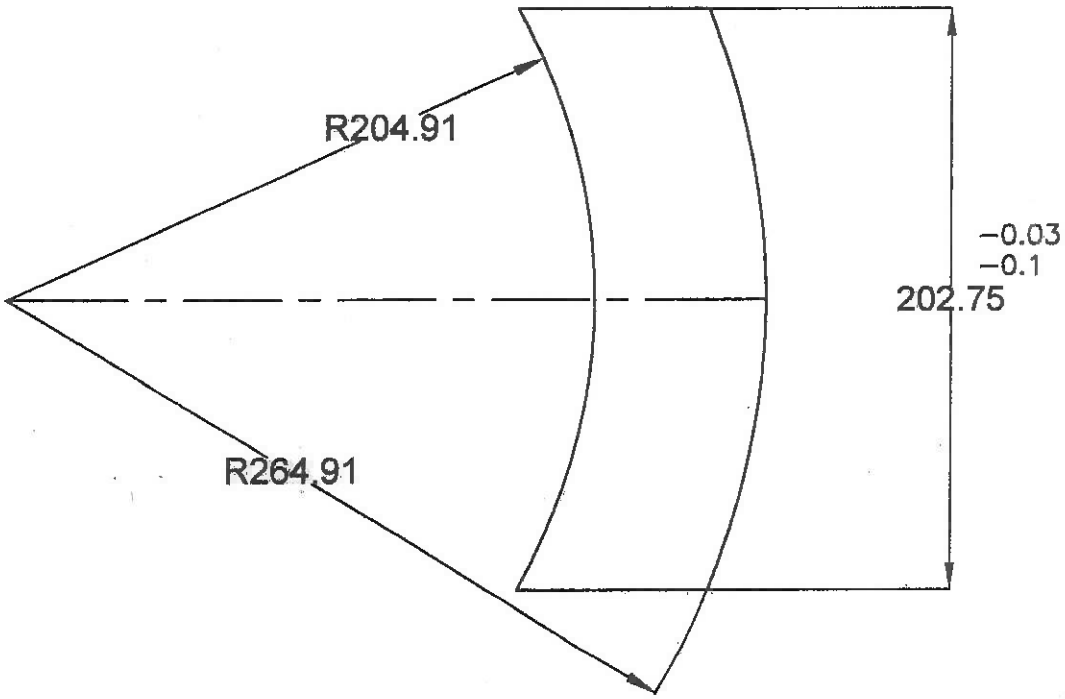

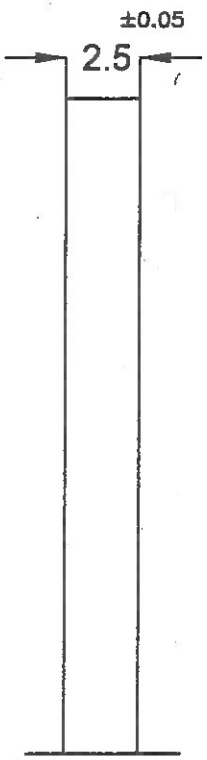

Note: 1. Surface Finish 3.2

2. GeneralTolerance ±0.1

NAME OF CUSTOMER/PROJECT

BHARAT HEAVY ELECTRICALS LTD.,
ELECTROPORCELAINS DIVISION
BANGALORE – 560 012

	NAME	SIGN	DATE
DRN	DHANUSH		07.05.18
CHD	Antara Baral		07.05.18
APPD	K S Ravishankar		07.05.18

DEPT CODE	GRADE OF TOL DIM C/M/F		SCALE N.T.S	WEIGHT (grms) (Approx)	REF TO ASSY.DRG	ITEM No.	No.OF ITEMS

TITLE: CERAMIC PLATE

CARD CODE

DRAWING No. 4 987 60 00105

REV. 00

SHEET No. | No.OF SHEETS

REV	DATE	ALTERED / CHECKED	REV	DATE	ALTERED / CHECKED	REV	DATE	ALTERED / CHECKED

SUPERSEDES DRG. No.

SHT.24 SIZE A4 210 x 297

SIGN AND DATE | REF. DRG. No. | TO THE INTEREST OF THE COMPANY | DWG No. | INVENTORY No.