R 05-229/C

CAUTION THE INFORMATION ON THIS DOCUMENT IS THE PROPERTY OF BHARAT HEAVY ELECTRICALS LTD IT MUST NOT BE USED DIRECTLY OR INDIRECTLY IN ANY WAY DETRIMENTAL TO THE INTEREST OF THE COMPANY

DRAWING NO 3-79-090-00407/01

TEMPERATURE SETTING DIAL WITH LOCKABLE KNOB SHALL BE PROVIDED INSIDE THE COVER

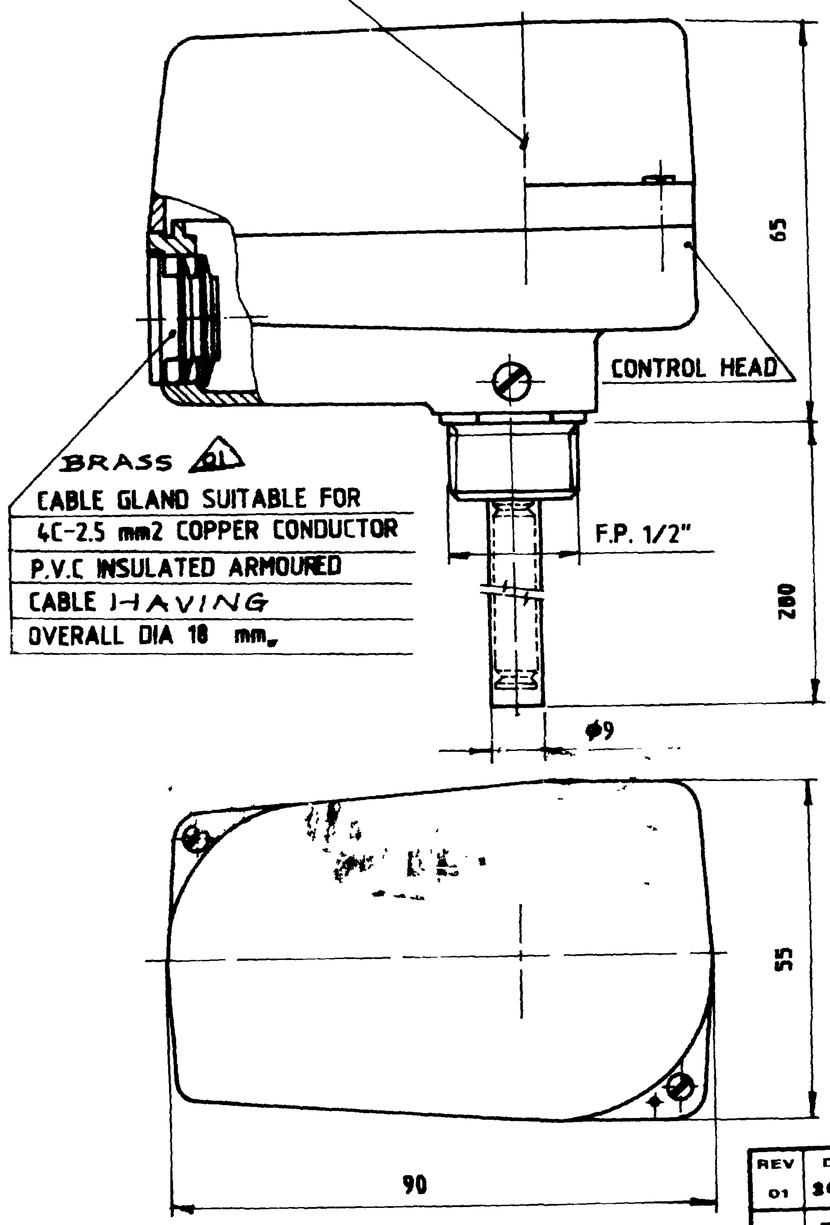

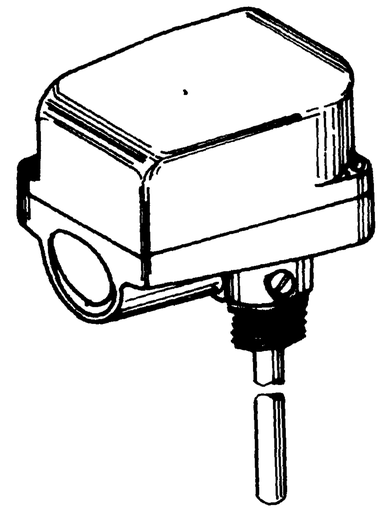

SPECIFICATION

1 SETTING RANGE 90 - 190°C
2 COVER SHALL BE OF ANODISED ALUMNIUM AND SUITABLY GASKETED TO MAKE IT WEATHER PROOF .
3. TO PROVIDE CHANGE OVER CONTACT SUITABLE FOR 1 PH, 240V, 50HZ INDUCTIVE .
4 ACCURACY OF THE DIAL SETTING ±5° C.
5. SHEATH MATERIAL OF THE STEM SHALL BE STAINLESS STEEL.
6. MAKE :- LANDIS AND GYR , ZUG , SWITZERLAND
TYPE :- RAK 12. 0063
7. THIS SUPERCEDES DRG NO 3-79-090-00047 REV-04

REF:PRQA:590 FOR PAINTING
REF:PRQA:500 FOR UNTOL.DIMNS

VARIANT NO	ITEM NO	DESCRIPTION	STD	DRAWING NO	ITEM NO.	MATL CODE	A/C	UNIT/DI	UNIT WT.
	1	THERMOSTAT				97 - 258 -002			0 6
					VAR NO	MATL SPEC			QTY

TYPE OF PRODUCT OR NAME OF CUSTOMER/PROJECT: ELECTROSTATIC PRECIPITATOR 01

Bharat Heavy Electricals Ltd.,
BOILER AUXILIARIES PROJECT
RANIPET 632 406

	NAME	SIGN	DATE
DRN	M.BOOPATHY	M.	9-1-87
CHD	M. RAVIKUMARTHI		9 1 87
APPD	B. SIVARAM		9 1 87

NO OF ITEMS

REV	DATE	ALTERED / CHECKED
01	30 06 93	

TITLE INCLUDED.
Brass material indicated for gland

DEPT	GRADE OF UNTOL DIM	SCALE	WEIGHT (Kg)	REF /OLD DRG
ARCS	C/M/F	—	—	3-79-090-00047/04
CODE 062				

ITEM NO

TITLE: THERMOSTAT

CARD CODE: U 01

DRAWING NO. 3-79-090-00407

REV 01

SIZE A