DRAWING NO. 1-55-328-01884

ALL DIMENSIONS ARE IN MILLIMETRES

FOR PRODUCTION
REF. PR:QA:590 FOR PAINTING
REF. PR:QA:500 FOR UNTOL. DIMNS.
REF. APPLICABLE GMS FOR MATCODE&SPEC.

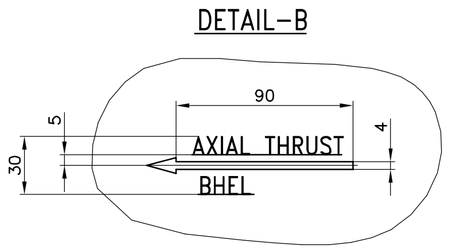

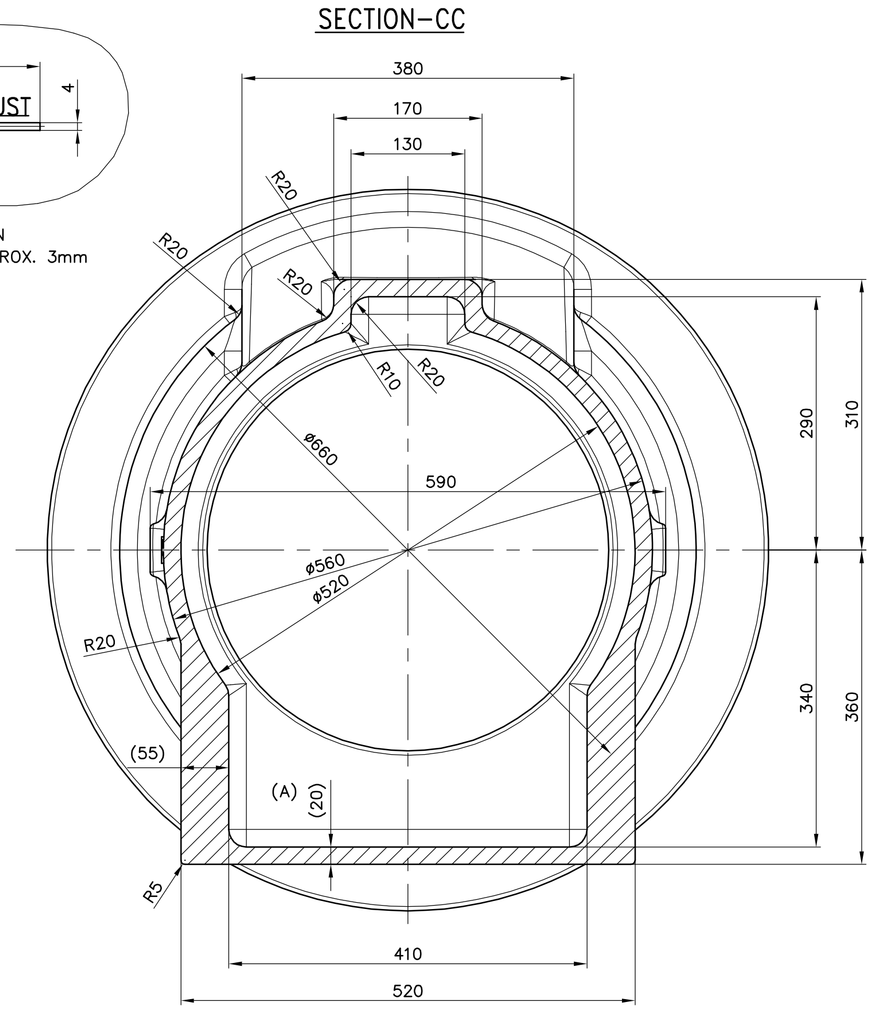

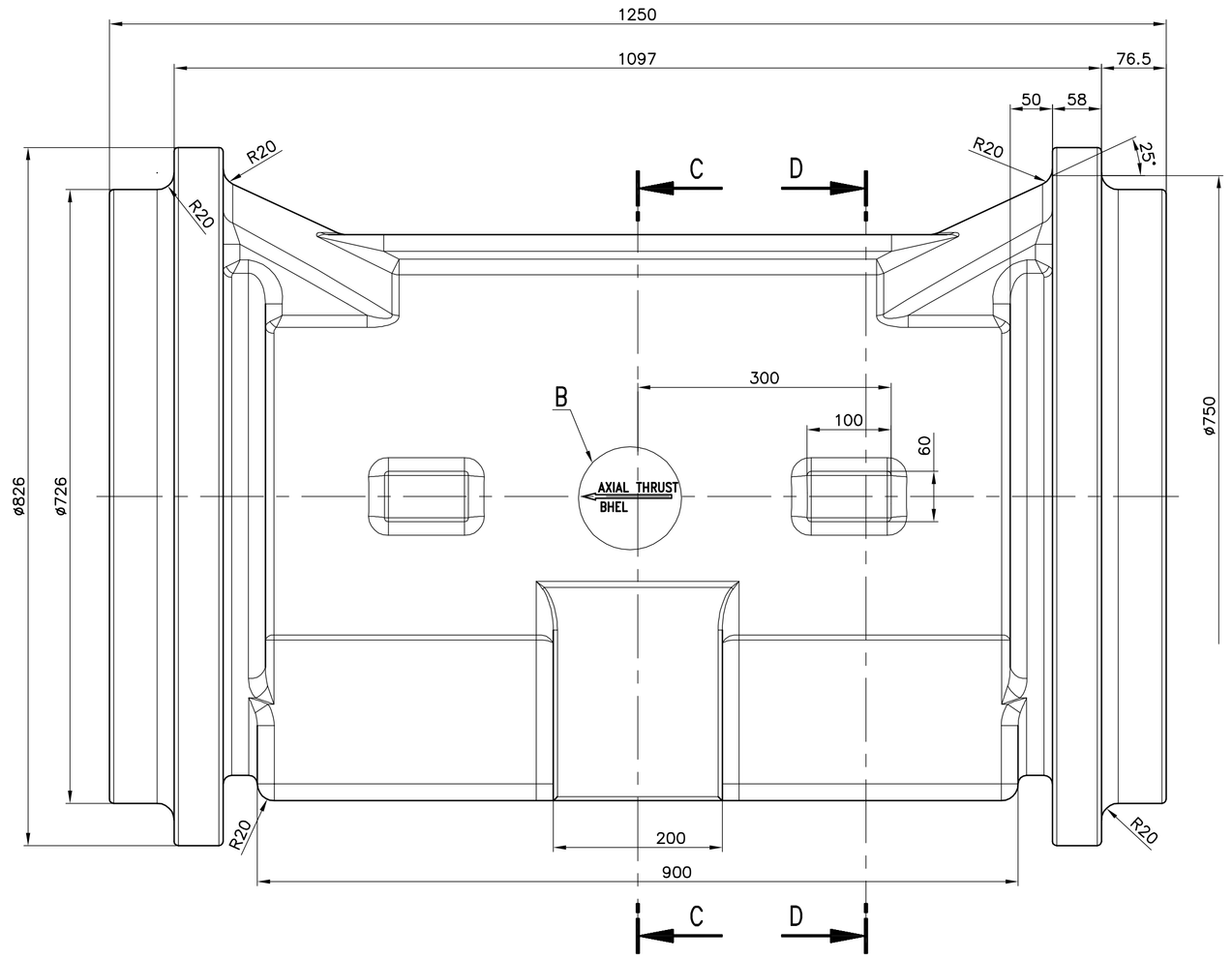

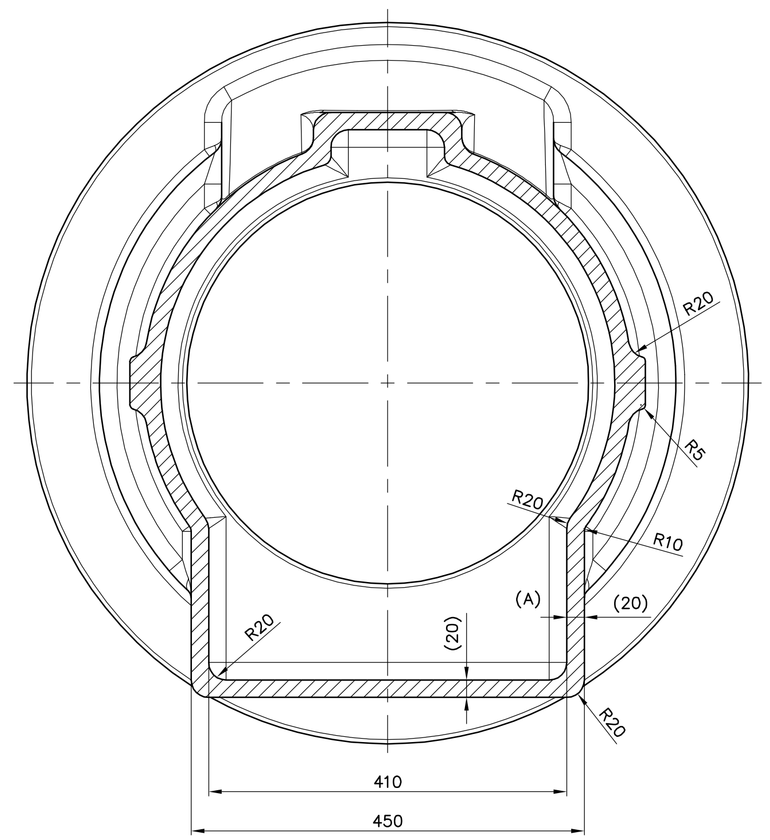

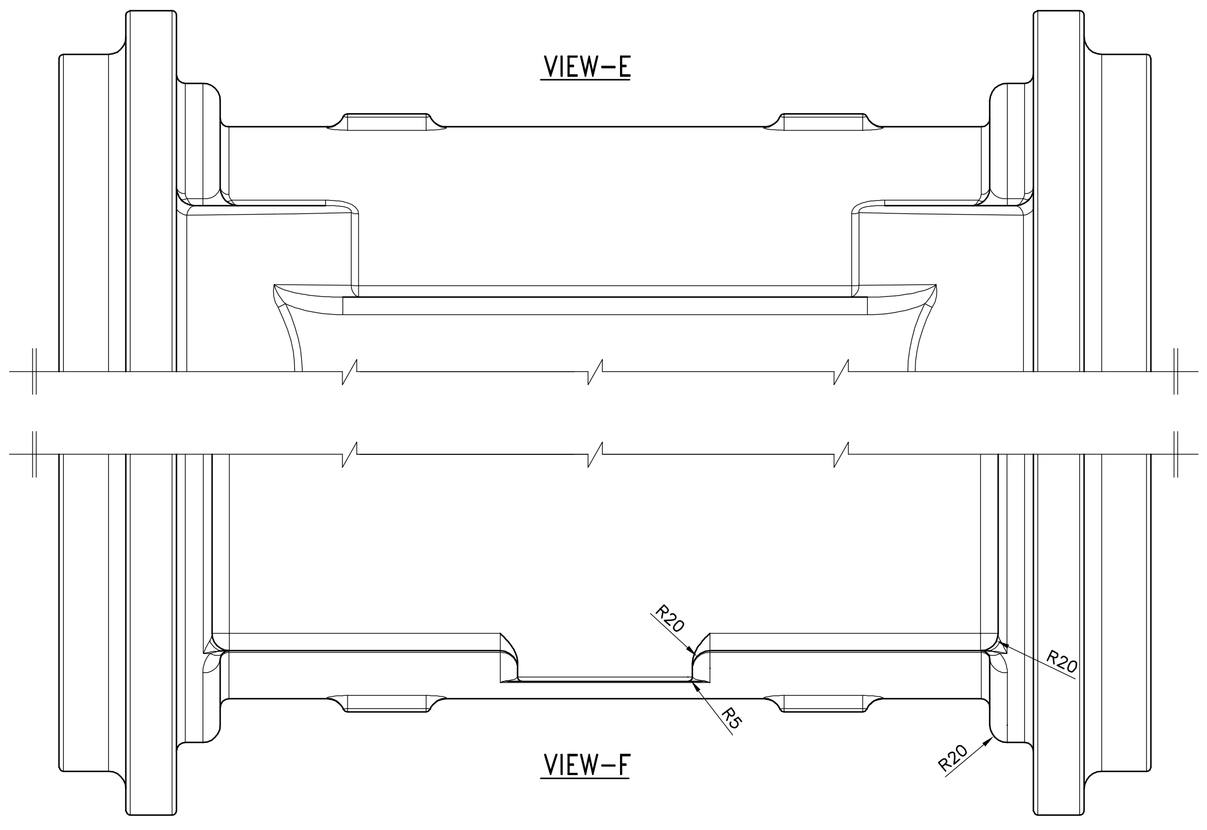

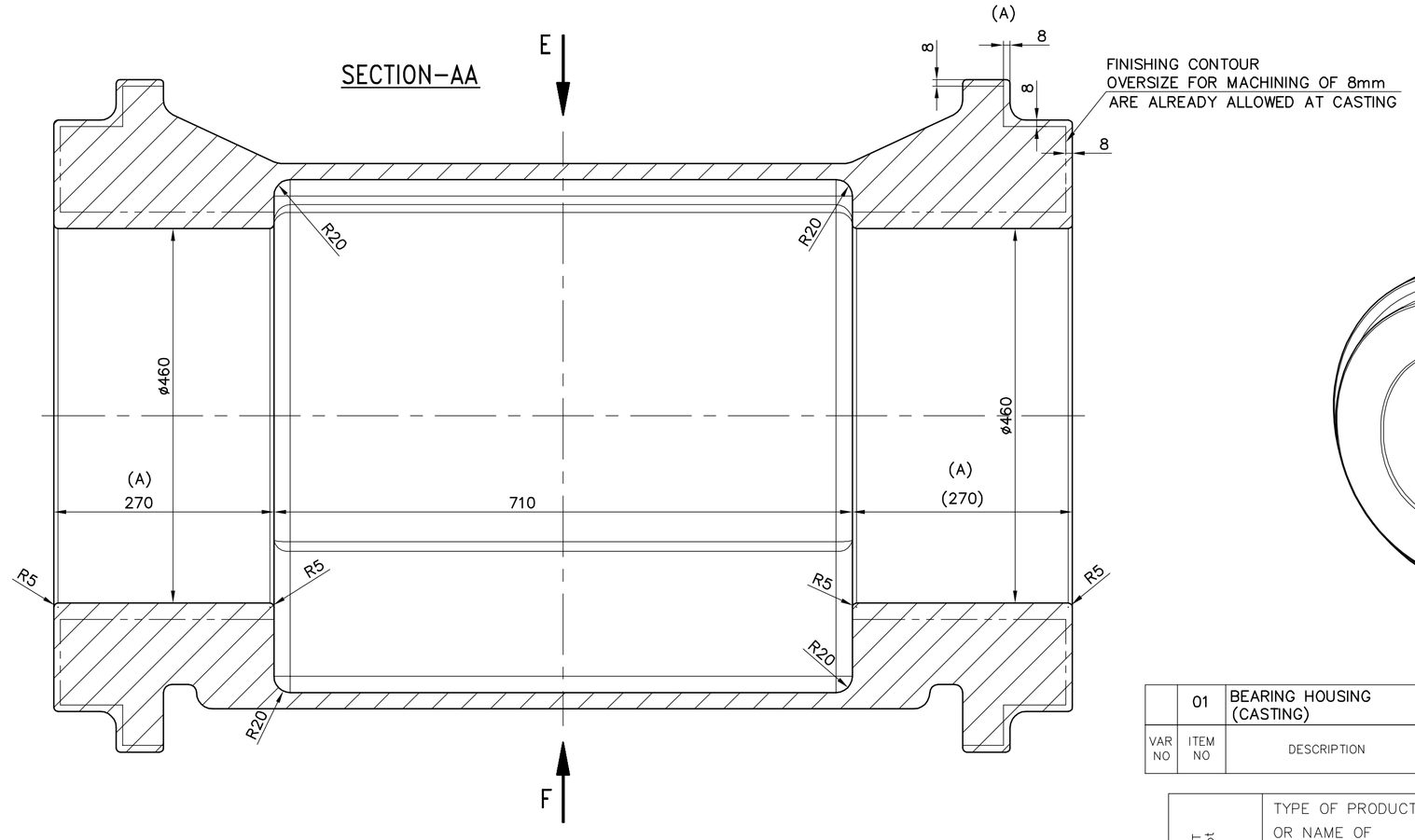

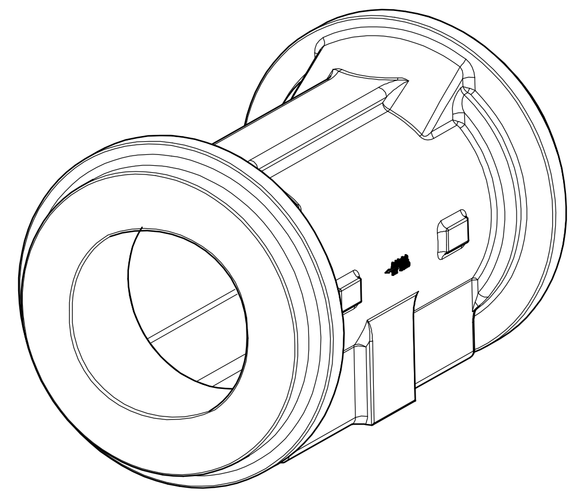

VAR NO	ITEM NO	DESCRIPTION	CAT	DRAWING No.	NO / VAR NO	MATL CODE / MATL SPECN	A P C	UNIT / DI	UNIT WT / QTY	GS	ZONE
	01	BEARING HOUSING (CASTING)							1260.600 / 1		

NOTES:-
CAST OIL TIGHT
VISUAL CHECK UP ON PORES.
CASTING PATTERN ACC.TO DIN EN 12890
ALL NON DIMENSIONED FILLETS INSIDE R5
ALL NON DIMENSIONED FILLETS OUTSIDE R10

REV	DATE	ALTERED / CHECKED
ZONE		

CAUTION: The information on this document is the property of BHARAT HEAVY ELECTRICALS LTD. It must not be used directly or indirectly in any way detrimental to the interest of the company.

TYPE OF PRODUCT
OR NAME OF
CUSTOMER/PROJECT

BHARAT HEAVY ELECTRICALS LTD.,
UNIT: BOILER AUXILIARIES PLANT,
RANIPET – 632 406.

	NAME	SIGN	DATE	NO.OF VAR.
DRN	P.SHAKI.O/L	Sd/–	10.10.15	
CHD	MAHESH	Sd/–	10.10.15	
APPD	A.V.N	Sd/–	10.10.15	

DEPT	GRADE OF UNTOL.DIM	SCALE	WEIGHT (KG).	REF. TO ASSY/OLD DRG.	ITEM NO.	NO. OF ITEMS
FANS CODE 864	PR:QA:500	N.T.S	1260.600	V7007942 A		

TITLE	CARD CODE	DRAWING NO.	REV
BEARING HOUSING CASTING W240	U 01	1-55-328-01884	

Size A1