FIRST ANGLE PROJECTION

(ALL DIMENSIONS ARE IN mm)

DRG. NO. 1-332-10-02002 | SH. 1 OF 1

THE INFORMATION ON THIS DOCUMENT IS THE PROPERTY OF BHARAT HEAVY ELECTRICALS LIMITED. IT MUST NOT BE USED DIRECTLY OR INDIRECTLY IN ANY WAY DETRIMENTAL TO THE INTEREST OF THE COMPANY

GENERAL DIMENSIONAL LIMITS,FITS & TOLERANCES AS PER HY0230261

RECOVER FROM THIS RING A TEST PIECE ACCORDING TO FIGURE-E AFTER HEAT TREATMENT AND PRESERVE THE REMAINING MATERIAL FOR FURTHER TESTS.

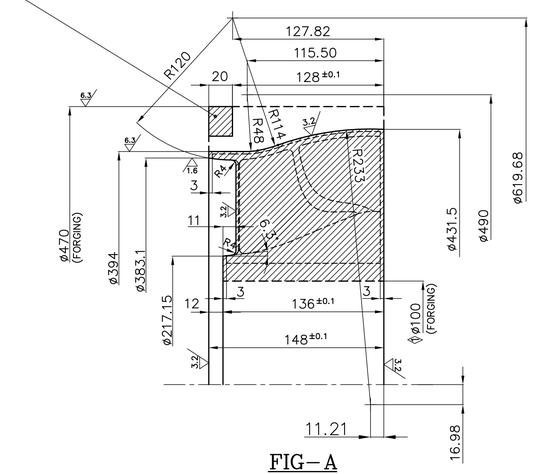

FIG-A
(TURNING)

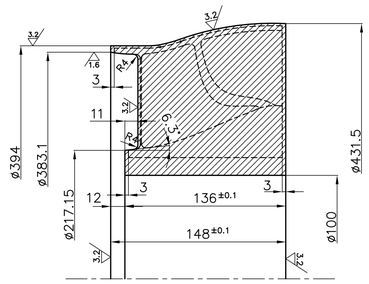

FIG-B
(BEFORE SCOOP MILLING)

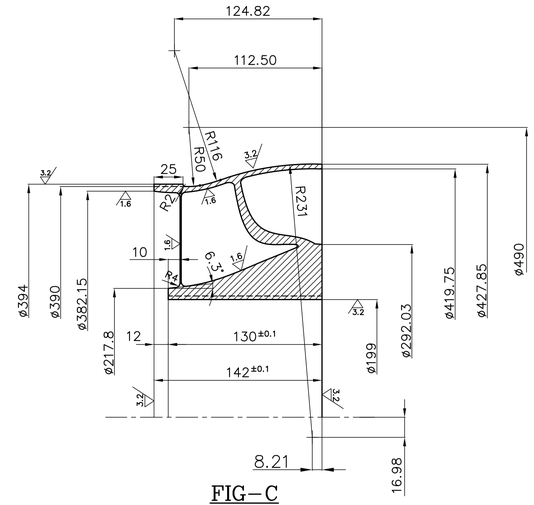

FIG-C
(AFTER SCOOP MILLING & BEFORE HEAT TREATMENT)

SECTION W-W

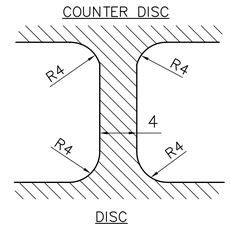

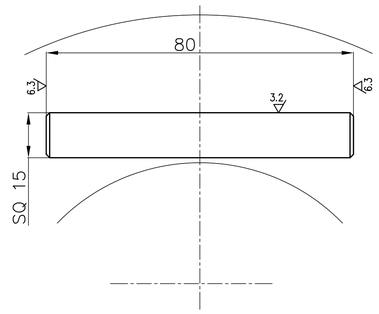

FIG-E

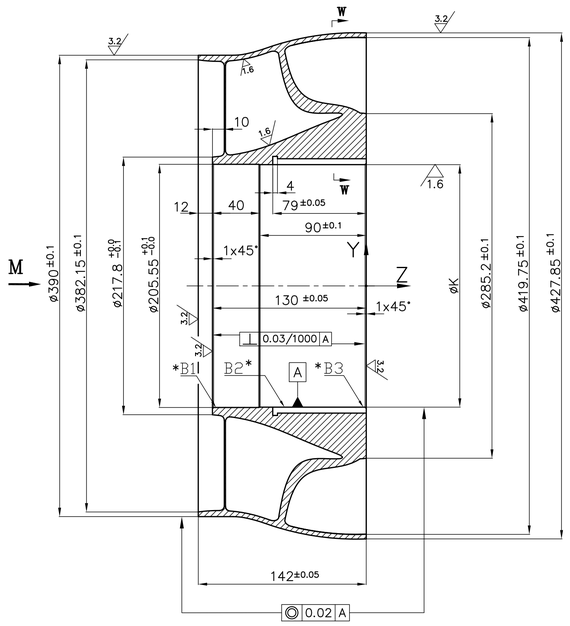

SECTION P-P
(FINISHED IMPELLER)

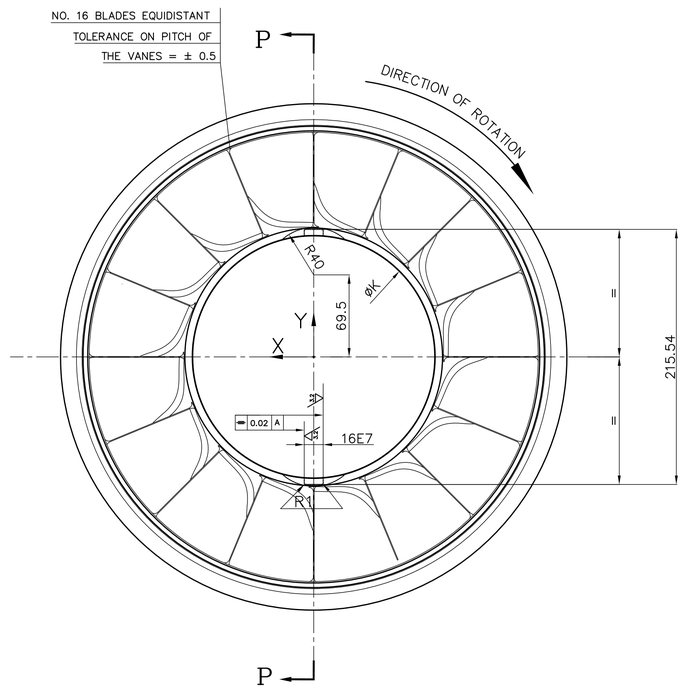

VIEW-M

NOTE

1. FOR BLADE PROFILE REFER THE UG MODEL PROVIDED.
2. PERFORM OVERSPEED TEST OF THE IMPELLER AS PER INSPECTION AND TESTING DOC AND CHECK THE DIAMETERS BEFORE AND AFTER THE TEST.
3. REFER INSPECTION AND TESTING DOC FOR HEAT TREAT THE MATERIAL SO AS TO ATTAIN REQUIRED YIELD STRENGTH (KG-m/mm2) AND AN IMPACT STRENGTH (KG-m/cm2) AT SPECIFIED TEMPERATURE (CHARPY 'U' NOTCH)
4. DYE PENETRANT TEST SHALL BE CONDUCTED AT SPECIFIED STAGES OF MANUFACTURE AS SPECIFIED IN TECHNOLOGICAL PROCESS
5. DYNAMIC BALANCING OF IMPELLER TO BE PERFORMED.
6. SEQUENCE OF OPERATION FOR PRODUCTION AND INSPECTION OF THE IMPELLER AS PER TECHNOLOGICAL PROCESS
7. STAGE INSPECTION/TEST AS PER TECHNOLOGICAL PROCESS.
8. GEOMETRIC TOLERANCES ARE THE MAX. READ ON THE COMPARATOR.
9. THE K VALUES MUST BE INSIDE TOLERANCE LIMITS AFTER OVER SPEED TEST.
10. DIMENSIONS TO BE TAKEN ON øK IN THE AREAS
    - * B1 – GAS ENTRANCE
    - * B2 – CENTRAL
    - * B3 – OPPOSITE TO GAS ENTRANCE

CAUTION
INTERCHANGEABLE JOB
NO DEVIATION PERMITTED

VAR. NO.	MATERIAL	YIELD STRENGTH	øK	SHAFT
00	HY 19391	65-75 Kg/mm^2	ø205^{H7}	ø205.42$^{+0.0}_{-0.02}$

TYPE OF PRODUCT
OR
NAME OF CUSTOMER/PROJECT

BHARAT HEAVY ELECTRICALS LTD.
HYDERABAD

	NAME	SIGN.	DATE	NO.OF VAR.
DRN.	HARI	RESTRICTED USE	27.12.17	-N.A.-
CHD.	SHESHRAO		28.12.17	
APPD.	YVRL		28.12.17	

REV.	DATE	ALTERED	CHD/APPD
01	26.07.18	HARI	YVRL

FORGING ID CHANGED FROM 175 TO 100 IN LINE WITH BHEL R&D REQUIREMENT.

DEPT. COMPR CODE: 420 | UNTOL. DIMS. GR. ~~C/M/F~~ | SCALE NTS | WEIGHT (KG) 26 | REF. TO ASSY. DRG. -N.A.- | ITEM NO. -N.A.- | NO.OF ITEMS -N.A.-

TITLE SHROUDED FAN (CW) DIA.428MM (SCOOP MILLING)

CARD CODE N.A.

DRAWING NO. 1-332-10-02002 REV. 01

SHT. No 1 NO. OF SHT. 1

COMPUTER FILE NAME | REF. DRG. NO. | SIGN. AND DATE | INVENTORY NO

JCS

Aug Sat 11 13:49 2018

This Drawing is printed from Engineering Digital Archive System (EDAS).
Therefore signatures are not essentially required.