DRAWING NO 0-66-101-80042

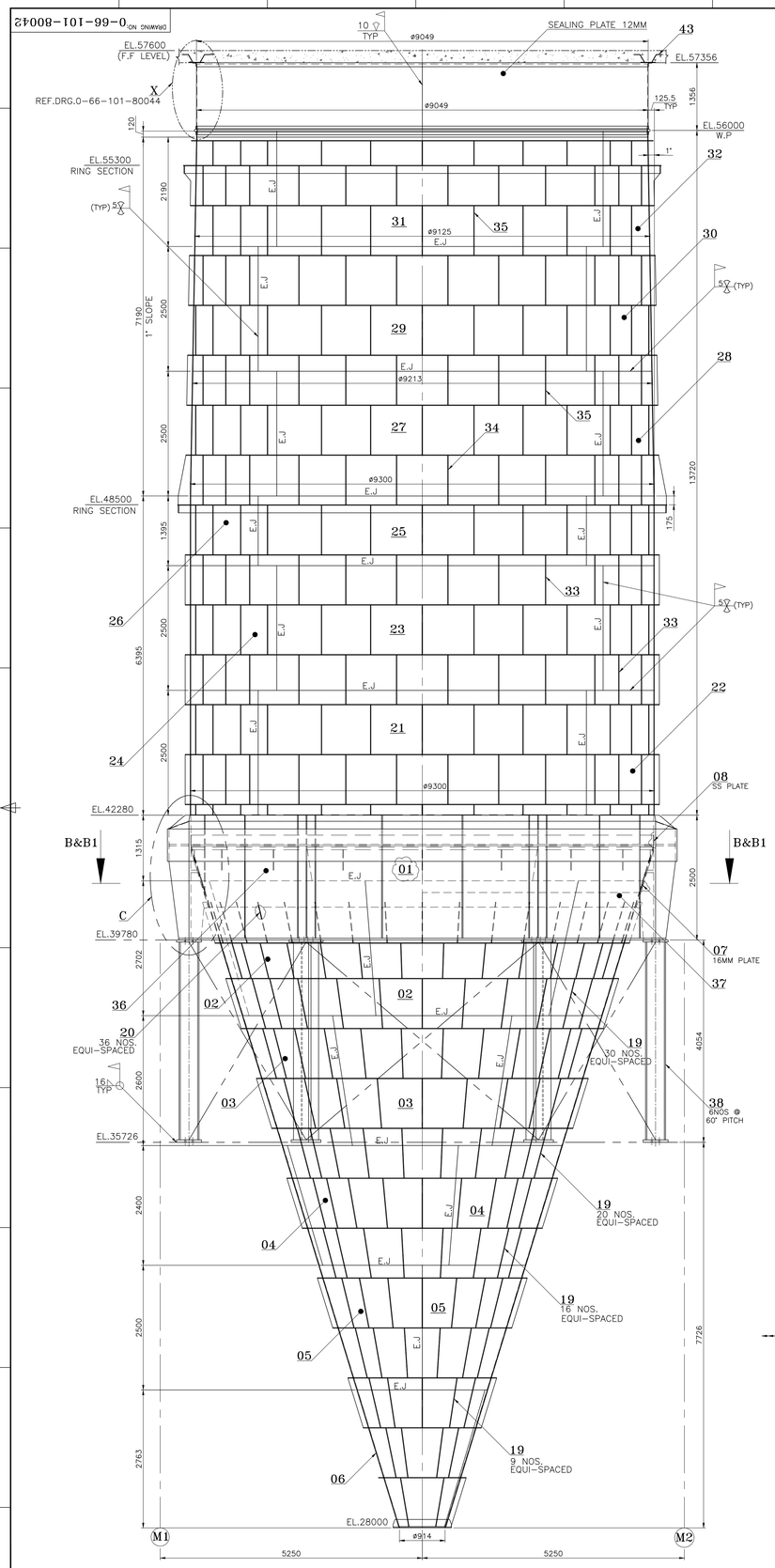

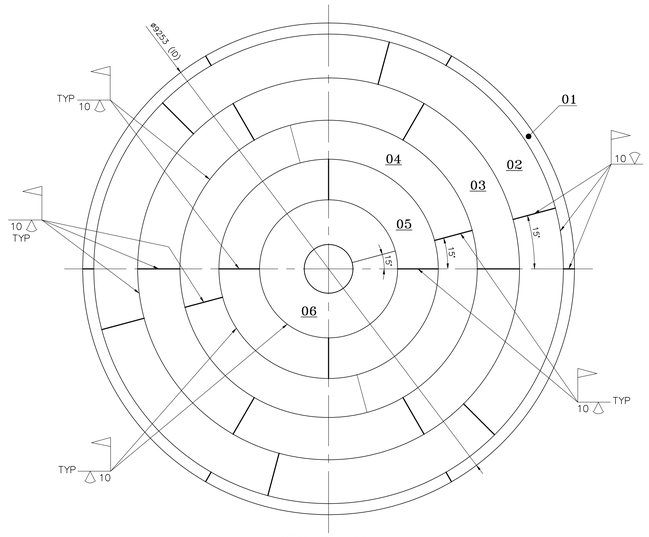

SECTION-BB
12mm PLATE WELDING DETAIL

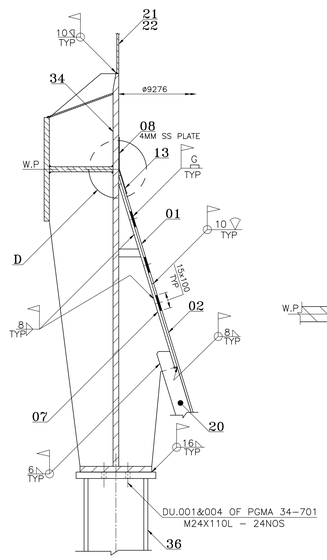

DETAIL-C

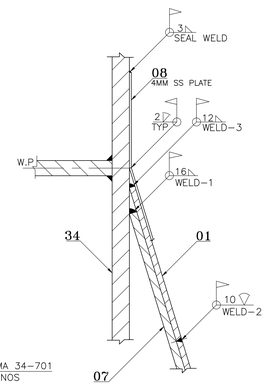

DETAIL-D
(WELDING SEQUENCE AT W.P)

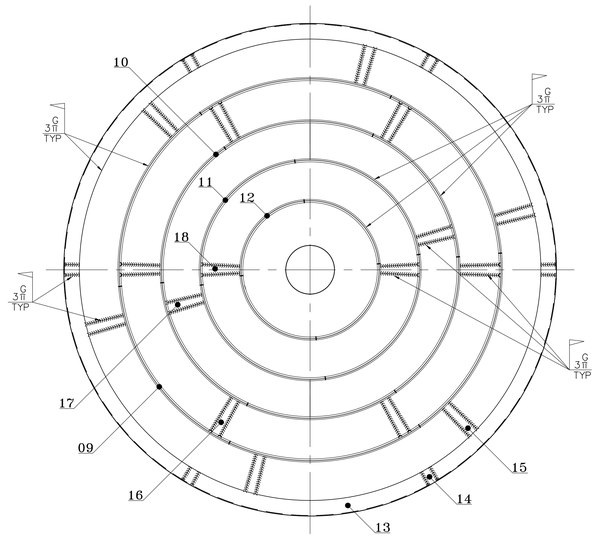

SECTION-B1B1
(SS LINER PLATE WELDING DETAIL)
(TYP)

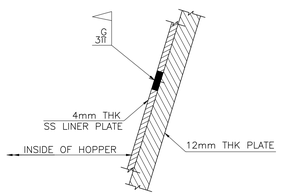

TYPICAL WELDING DETAIL
(SS LINER PLATE TO LINER PLATE)

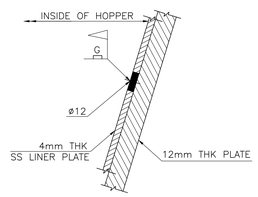

TYPICAL PLUG WELDING DETAIL
(SS LINER PLATE TO 12MM THK PLATE)

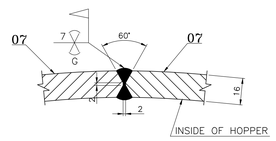

TYP. VERTICAL JOINT DETAIL
(16mm STRENGTHENING PLATE)

NOTIFICATION
E.J - ERECTION JOINT

READ THIS ALONG WITH DRG.NO.

FOR PRODUCTION REFERENCE
a) 0-66-101-80041
b) 1-66-101-80472
c) 0-66-102-80039
d) 0-66-102-80040
e) 1-66-102-80471

FOR ERECTION REFERENCE
a) 0-66-101-80043
b) 0-66-101-80044
c) 0-66-151-80046

FOR TOLERANCES OF UNTOLERANCED DIMENSIONS DURING MANUFACTURE REFER RELEVANT Q.C.P\Q.P
MANUFACTURING AS PER RELEVANT Q.C.P\S.Q.P

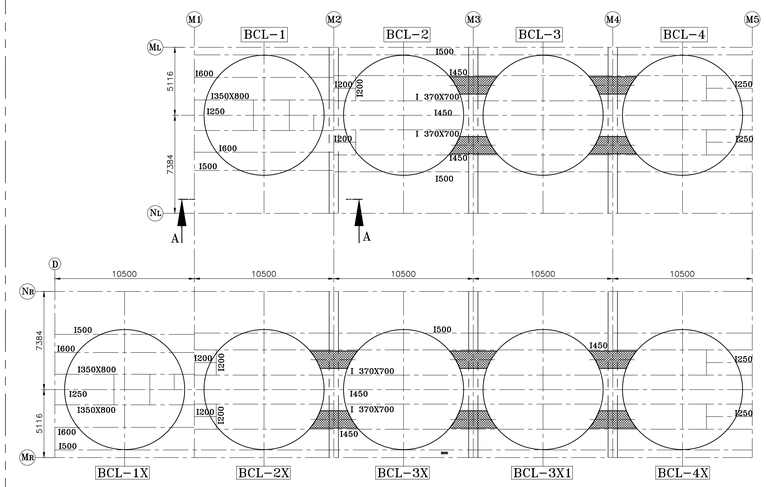

MARKING PLAN AT EL.57356(T.O.S)

ITEM NO	DESCRIPTION	PGMA	DU.NO	QTY	REMARKS
43	GROUTING PLATE-I	66-102	023	6	
42	GUSSET PLATE-II PLATE 12X843X887		022	6	
41	GUSSET PLATE-I PLATE 12X552X592		021	24	
40	BRACING STAR ANGLE ASSY-II		020	6	
39	BRACING STAR ANGLE ASSY-I		019	12	
38	RING GIRDER SUPPORT BEAM ISMC350X400		018	6	
37	RING GIRDER PART-II		017	2	
36	RING GIRDER PART-I		016	2	
35	VERTICAL STIFFENER PLATE-3 PLATE 12X1010X988		015	60	
34	VERTICAL STIFFENER PLATE-2 PLATE 12X254X988		014	30	
33	VERTICAL STIFFENER PLATE-1 PLATE 12X100X988		013	60	
32	BUNKER SHELL PLATE-12		012	2	
31	BUNKER SHELL PLATE-11		011	2	
30	BUNKER SHELL PLATE-10		010	2	
29	BUNKER SHELL PLATE-9		009	2	
28	BUNKER SHELL PLATE-8		008	2	
27	BUNKER SHELL PLATE-7		007	2	
26	BUNKER SHELL PLATE-6		006	2	
25	BUNKER SHELL PLATE-5		005	2	
24	BUNKER SHELL PLATE-4		004	2	
23	BUNKER SHELL PLATE-3		003	2	
22	BUNKER SHELL PLATE-2		002	2	
21	BUNKER SHELL PLATE-1	66-102	001	2	
20	VERTICAL STIFFENER-2 PLATE 12X99X879	66-101	020	36	
19	VERTICAL STIFFENER-1 PLATE 12X99X1063		019	75	
18	VERTICAL SS LINER PLATE-5 PLATE 4X200X2412		018	2	
17	VERTICAL SS LINER PLATE-4 PLATE 4X200X2307		017	2	
16	VERTICAL SS LINER PLATE-3 PLATE 4X200X2516		016	6	
15	VERTICAL SS LINER PLATE-2 PLATE 4X200X2476		015	6	
14	VERTICAL SS LINER PLATE-1 PLATE 4X200X993		014	6	
13	SS LINER WALL-6		013	1 SET	
12	SS LINER WALL-5		012	1 SET	
11	SS LINER WALL-4		011	1 SET	
10	SS LINER WALL-3		010	1 SET	
09	SS LINER WALL-2		009	1 SET	
08	SS LINER WALL-1		008	1 SET	
07	STRENGTHENING PLATE		007	6	
06	BUNKER BOTTOM WALL - VI		006	1	
05	BUNKER BOTTOM WALL - V		005	2	
04	BUNKER BOTTOM WALL - IV		004	2	
03	BUNKER BOTTOM WALL - III		003	6	
02	BUNKER BOTTOM WALL - II		002	6	
01	BUNKER BOTTOM WALL - I	66-101	001	6	

REV	DATE	ALTERED
		CHKD & APPD
ZONE		

CAUTION: The information on this document is the property of BHARAT HEAVY ELECTRICALS LIMITED and is loaned directly or indirectly on the understanding that it will not be copied, reproduced or disclosed to any company.

TYPE OF PRODUCT OR NAME OF CUSTOMER/PROJECT: MOUDA SUPER THERMAL POWER PLANT STAGE II, 2X660 MW MAHARASHTRA, INDIA.

Bharat Heavy Electricals Ltd
UNIT: HIGH PRESSURE BOILER PLANT
TIRUCHIRAPALLI - 620014

	NAME	SIGNATURE	DATE
DRN	A.P.K		26.05.15
CKD	F.J.T		26.05.15
APPD	F.J.T		26.05.15

DEPT: PCPS CODE: 1322 | ALL DIMENSIONS ARE IN MM | PROJECTION | SCALE: N.T.S | WEIGHT (Kg) | REF TO ASSY / OLD DWG

TITLE: COAL BUNKER ASSEMBLY

DRAWING NO : 0-66-101-80042 | REV 00

A0 SIZE