ANDHRA PRADESH POWER DEVELOPMENT CO. LTD.

1X800 MW APPDCL KRISHNAPATTANAM STAGE-II

TECHNICAL SPECIFICATION
FOR

CONTROL VALVES WITH ACCESSORIES (Pneumatically Operated)

VOLUME – IIB

SECTIONS-A, C & D

SPECIFICATION No: PE-TS-420-145-I104

BHARAT HEAVY ELECTRICALS LIMITED
POWER SECTOR
PROJECT ENGINEERING MANAGEMENT DIVISION
NOIDA, INDIA

CONTENTS

VOL-II B

SECTION	DESCRIPTION	PAGE NO.
A	Scope of Enquiry	3
C	Specific Technical Requirements	5
	Customer's Specification	13
	Datasheets-A&B (Data sheet no. PES-145-06-DS1-1)	27
	Datasheets-C (Data sheet no. PES-145-06-DS2-1)	78
	Quality Plan	82
	Bill of Quantity - Main Supply	89
	Bill of Quantity - Spares	91
D	Equipment Specification (PES – 145 – 06)	96
	Specification for Smart Positioner (PES – 145 – 06A)	102
	Hook-Up Diagram (PES-145-06B)	106
	Guideline for Packing (PES-145-06C)	110
	Specification for Electric Actuator (PES-145-06D)	111
	Sub-Vendor List	115

SECTION – A

SCOPE OF ENQUIRY

SCOPE OF ENQUIRY

1. SCOPE

1.1 This specification covers the Design, Manufacture, Inspection and Testing at manufacturer's works, proper packing for transportation and delivery to site of the **Control Valves with Pneumatic Actuator along with Accessories, Start-up/Commissioning and Mandatory Spares** as mentioned in different sections of this specification for **1X800MW KRISHNAPATTANAM STAGE-II** project.

1.2 The quality plan enclosed forms the minimum requirement but not limited to be adhered to by the bidder. Bidder to sign and stamp the same and submit along with the offer as an acceptance.

1.3 Following signed & stamped documents with company seal to be submitted by bidder.

a) Complete offer including calculation sheets, catalogues etc.
b) Quality Plan
c) Datasheet A & B, duly filled
d) Unpriced Bid

2 GENERAL TECHNICAL INSTRUCTIONS

2.1 It is not the intent here to specify all the details of design and manufacture. However, the equipment shall conform in all respects to high standard of design, engineering and workmanship and shall be capable of performing the required duties in a manner acceptable to the customer / consultant, who will interpret the meaning of drawing and specification and shall be entitled to reject any component or material which in his judgment is not in full accordance herewith.

2.2 The omission of specific reference to any component / accessory necessary for the proper performance of the equipment shall not relieve the supplier of the responsibility of providing such facilities to complete the supply within the quoted prices.

2.3 BHEL' s / Customer' s representatives shall be given access to the shop in which the equipment are being manufactured or tested and all test records shall be made available to them.

2.4 The Equipment covered under this specification shall not be dispatched unless the same have been finally inspected, accepted and Material Dispatch Clearance Certificate (MDCC) is issued by BHEL / Customer.

SECTION – C

- **SPECIFIC TECHNICAL REQUIREMENT**
- **CUSTOMER'S SPECIFICATION**
- **DATA SHEETS – A & B**
- **DATA SHEETS– A & B FOR ACCESSORIES**
- **DATA SHEETS – C**
- **QUALITY PLAN**
- **BOQ-MAIN SUPPLY**
- **BOQ-MANDATORY SPARES**

SPECIFIC TECHNICAL REQUIREMENTS

The requirements in this section are specific for this project and shall over-ride the specification under Section-D in case of any contradiction. However in case of any contradiction between this SPECIFIC TECHNICAL REQUIREMENTS and customer SPECIFICATION attached further, the customer SPECIFICATION shall prevail and BHEL's decision shall be final.

1) **Multistage and Multipath Control Valve to be provided for the following Control Valves.**

S.NO.	TAG NO.	SERVICE DESCRIPTION
1	FDV-8.	LOW LOAD FEED CONTROL
2	CDV-40	GSC MIN. FLOW RECIRCULATION

2) Bidder to include the following in their BOQ:-
   i) Valve Diagnostic & Calibration Software (For all tags)
   ii) PC (Personal Computer) along with furniture for installing the above software. Specification of the PC & Furniture shall be as per relevant clauses of the Customer specification enclosed in the section-C of this technical specification. The valve diagnostic software shall be able to communicate with the Smart Positioner & access the diagnostic features of the Smart Positioner.
   Bidder to offer latest version of calibration and diagnostic software which should be compatible with latest operating system at the time of commissioning of valve/positioner without any additional cost to BHEL.
   The offered software shall be compatible with the HART MANAGEMENT SYSTEM hardware of reputed makes like MTL, P&F etc.

3) Bidder to note that data sheet-B, Format "Schedule of submission of Drawings / Documents, Equipment Manufacture, Inspection and Despatch" enclosed in Section-D, to be signed and stamped and submitted with the bid. Quality Plan enclosed in Volume-IIB should be furnished duly signed and stamped. NO DEVIATION IS ACCEPTABLE.

4) The control valves' actuator shall be designed for 150% thrust required for the valve (at shut-off pressure) at an airline supply pressure of 5.5 kg/sq.cm.

5) Control valves shall be sized to have an opening of 10% min. And 80% at max. Flow condition. Further, the valve stem travel range from minimum flow condition to maximum flow condition shall not be less than 50% of the total valve stem travel.

6) All the valves shall be capable of handling at least 120% of the required maximum flow.

7) Cast iron valves are not acceptable.

8) Extension bonnets shall be provided where the maximum temperature of flowing fluid is greater than 280 deg. C.

9) Flanged valves (if applicable) shall be rated at no less than ANSI press class of 300 lbs.

10) Anti-cavitation trims shall be provided for valves with cavitation services and hardened trims for flashing services.

11) The multiple stages shall be such that the controlled pressure drop across each stage shall ensure that the valve does not cavitate in any of the stages.

12) Control valve accessories shall be fitted on the valve body. Integral pneumatic tubing shall be ¼" OD SS tubing, and fittings shall also be of SS. Applicable accessories shall be terminated at the junction box (mounted on the body).

13) Type of flow action ("under the seat" or "over the seat") will be selected by the vendor, however wherever downstream side is subjected to vacuum, flow action shall be "flow to close" (over the seat). Separate indication for the same has not been provided.

14) Trim supplied shall be suitable for quick changing and trim velocity shall not exceed 30 m/sec to avoid cavitation.

15) Bidder to ensure that the valve outlet velocity should not exceed 7m/sec for liquid service, 150m/sec for steam service and 50% of sonic velocity for flashing services.

16) Bidder to furnish detailed calculation for trim exit velocity and valve outlet velocity.

17) Bidder to furnish detailed noise calculation for all valves.

18) Control valves shall undergo quality assurance program as per the approved quality plan.

19) The sizing procedure followed shall be as per latest edition of ANSI/ISA or equivalent standard.

20) Tolerance on end to end, center to center, center to face shall be in accordance with ANSI B16.10

21) Facility to adjust the maximum travel of the stem shall be incorporated.

22) The end connections shall be socket welded for sizes 50NB or below and butt welded for sizes above 50NB.

23) Smart positioner shall be provided with advanced diagnostic software with features like stroke counter or travel counter, leakage in actuator, on line partial closure test, valve signature analysis, valve response test, valve fixation/ jamming detection etc. to be provided.

24) Universal HART calibrator (one per unit) shall be provided, common to all smart positioners.

25) PC and software shall be provided, common to all control valve positioners.

26) Enclosure class [ingress protection (IP) class] for all the accessories shall be as per requirement in the accessories data sheet.

27) Noise level at 1m away and 1.5m above shall be within 85 dB for all the valves.

28) Noise abatement mentioned shall be obtained by valve body and trim design & not by any external means.

29) Travel time for all the control valve shall be within 10 sec.

30) Booster relay / volume booster shall be provided wherever required.

31) All the formats in Volume-III should be filled-up and furnished with the bid, complete in all respect. Catalogue, Leaflets related with the models of Control Valves as well as each

accessory must be furnished with the offer. In the absence of those, the bid would be considered incomplete and liable for rejection.

32) The Hook-up diagram for Control valve is attached in Section-C. The Bidder's scope starts from isolation valve at Instrument Air Supply header. The suitable connector required for connection of pneumatic tubing to isolation valve at Instrument Air Header is also in bidder's scope.

33) Valve Body Sizes shall be quoted to take care of the specification requirements like parameters, and limitations of Fluid outlet velocities, Noise Level etc. However Port (Trim) Sizes shall be selected to suit CV requirement for achieving percentage valve lift as per specification, furnished at section-C.

34) Type of bonnet shall be according to the service condition. Extension bonnets shall be provided when the maximum temperature of the flowing fluid is greater than 280 Deg C.

35) Tolerances on end to end, center to center, center to face shall be in accordance with ASME B16.10.

36) Valve type like cavitation/flashing/ high DP has been indicated in the data sheet. Bidder to offer the valve accordingly. However if process is cavitating, although not indicated in the valve type, bidder to offer Anti-cavitation trim.

37) Trim material and body material has been specified in the Datasheets-A. Bidder to offer body material & trim material combinations equivalent or better than the material specified in Datasheets-A. Wherever there is deviation from the datasheets, bidder to furnish the documentary proof for confirming superior trim material/ body material selection along with their offer. BHEL/Customer reserves the right to accept/reject any variation to the specification.

38) The sizing procedure followed shall be as per latest edition of ANSI/ISA or equivalent standard.

39) Stem material for all Control Valves shall be SS 316 STELLITED.

40) Facility to adjust the maximum travel of stem & starting point of travel shall be incorporated.

41) Bidder to furnish the list of all control valves for which Cv test is to be carried. Cv test shall be carried out for each type of control valve (of same size, Cv, trim characteristics). Cv test reports shall be verified by BHEL/Customer. Conduction of Cv test is mandatory. Type test certificate shall not be acceptable.

42) Calculation of Cv, noise level, valve outlet velocity, trim exit velocity, actuator sizing, data sheet-C in line with data sheet-A of specification, dimensional drawings / edge preparation details, etc shall be submitted for BHEL/Customer review and approval, to reach BHEL within 15 days after receipt of LOI.

43) Bidder to note that, wherever downstream side of the valve is subjected to the Vacuum service, bidder to offer double gland packing, and in that case, flow direction of working fluid shall tend to close the valve. Separate indication for the same has not been made in the data sheets-A.

44) Selection of valves and actuators are bidder's responsibility. Any change in selection of type of valve / sizing / percentage opening, calculations, QP, etc., if desired by BHEL / Customer during approval of the documents after award of contract, without major changes in process parameters as per tender specification, shall be carried out without any commercial implication and time delay.

45) Limit switch, position feedback shall be terminated up to JB by 0.5 mm2/PVC/Cu/1.1kv/FRLS shielded control cables. Solenoid valve shall be terminated by 2.5 mm2 size cable.

46) SS nameplate for control valve shall include tag no. / KKS no. / Sl. no./ body material /size/press rating/trim material/trim type/action on air failure/diaphragm air pressure at full open and close condition.

47) Open to close and close to open time of pneumatic actuator (modulating type) shall be less than 10 sec. Bidder to include volume booster if required to achieve fast response time<10 sec for on/off type control valve also, the actuator shall have a response time less than 10 sec.

48) Specification of electrical actuator included under section-D shall not be considered.

49) Hand wheel shall have open/close direction.

50) Air filter regulator shall be designed for an inlet pressure of 5-8 kg/cm2.

51) Limit switch shall be designed for 1, 00,000 operations.

52) Expander/reducer shall be in BHEL's scope of supply. In case where cartridge/Lo-dB plate is envisaged by the bidder, expander/reducer between valve body and cartridge shall be in bidder scope.

53) JB shall be 36 ways as per enclosed hook-up diagram.

54) Pneumatic connection: for each control valve 25 meters length (for each leg of ¼" size light drawn tempered) SS tubing conforming to ASTM B75 shall be used. Thickness shall not be less than 0.065 inch. Fittings to be used with SS tubes shall be of SS, screwed type including SS connection to suit 15 NB size screwed root valves (as per IS-554). SS tubes shall be provided for connection between air filter regulators & root valves.

55) Inspection shall be carried out in line with approved drawing/ data sheet/ QP & specific technical requirements

56) Third party inspection: customer shall witness the inspection for control valves and Cv test at the manufacturer's works/ FCRI, PALAKKAD. Bidder to inform 15 days before the date of inspection.

57) In case during erection/commissioning of the control valve, any spares are required which have not been specified in the start-up/commissioning spares list, the same will have to be supplied by the bidder free of cost.

58) **SPARES:** The following spares are required to be offered

(A) Mandatory spares to be considered as separate package. Mandatory spares to be packed in different colour & shipped separately. Marking on mandatory spares must be in different colour from main supply so that these are easily identifiable at site.

(B) Recommended Spares:

In addition to the Mandatory spares mentioned, the bidder shall also furnish a List of Recommended spares for 3 years of normal operation of the Control valves / Accessories. BHEL/Customer reserves the right to buy any or all of the recommended spares.

The prices of these spares will remain valid for a period of minimum 6 months after the placement of order.

(C) Start-up & Commissioning Spares:

Start-up and Commissioning spares are those spares, which may be required during the start-up and commissioning of the Control Valves. All start-up spares, which are supplied under this contract, shall be strictly interchangeable with the parts for which they are intended for replacements. The format for price schedule to be filled-up by the bidder is enclosed in Volume-III

The Start-up and commissioning spares indicated by the bidder shall be a part of the main Control valves supply. However bidder to indicate prices separately. The list of these spares required is enclosed in the section-D of this specification.

59) Bidder to indicate the service life expectancy period for the spare parts under normal working conditions. The spares shall be treated and packed for long storage, under climatic conditions prevailing at site. Small items shall be packed in sealed transparent plastic bags with desiccators' packs as necessary.

60) **SMART POSITIONER**

i) The smart positioner shall accept 4-20 mA signal from the control system as input and provide a compatible signal for driving the pneumatic actuator.

ii) In addition to the electrical-to-pneumatic signal conversion and positioning functions, it shall also perform detailed diagnostics & make available the actuator/control valve faults via HART interface. The HART signal for the detailed faults shall be superimposed on the 4-20 mA control signal itself. The faults to be covered shall include valve jamming, air supply failure, leakage etc.

iii) It shall have facility of characterisation of the valve (i.e. equal percentage, quick opening, linear, etc.) in the positioners itself.

iv) The positioner shall have the facility of detection of control signal failure and making the valve either stayput /open /close as per process requirement upon this condition.

v) The smart positioner shall have the fail-freeze feature as well as fail safe feature.

vi) Universal Hart Calibrator to be provided.

61) Bidder to provide Cast Steel (CS) yokes. Cast Iron (CI) yokes are Not Acceptable.

62) Documentation:

(A) Along with the bids: following documents for respective projects separately

a) Signed and stamped compliance certificates in attached format (VOL.-III).

b) Schedule of prices in attached format (VOL.-III).

c) Schedule of submission of Drg. / Doc, Equip. Manufacture, Inspection and Dispatch.

d) Inspection schedule

(B) After the award of contract:

The documentation as listed below will separate for respective projects

6 sets of the following documents + 3 sets of CDs to be enclosed with the bids for Approval:

a. Assembly (dimensional) drawings.

b. Valve Edge preparation details.

c. Data sheet-C completely filled-up..

d. Hook-up diagram of Control Valve with Actuator & Accessories.

e. Valve & Actuator assembly dimensional drawings with weights.

f. Quality Plan duly signed and stamped.

g. All calculations like CV, Noise Level, Trim Exit Velocity, Valve Outlet Velocity, Actuator sizing etc.

h. All relevant catalogues for the models of the valves as well as accessories finalized.

i. Bar chart to indicate the time schedule for procurement, manufacture, testing and dispatch.

(C) Final documentation:

Copies of documents / drawings to be furnished by the successful bidder shall be as follows:

a. Assembly (dimensional) drawings, calculations, edge preparation details/datasheets/QP for approval – 10 sets.
b. Category-I & IV approved final drawings /datasheets – 10 sets with CD – ROMS.
c. Valve sizing calculations, noise level calculations and outlet velocity calculations – 10 sets with 2 CD – ROMS
d. Test certificates – 10 sets.
e. “As built” drawings – 10 sets.
f. Operation & maintenance manuals – 10 sets.

CUSTOMER'S SPECIFICATION

VOLUME : VI

SECTION-VII

SUB SECTION - B

CONTROL VALVES

1.00.00 **GENERAL**

1.01.00 Control valves for regulating service shall normally be globe body, preferably cage guided, metal-to-metal seated, pneumatically operated and shall be provided with characterized plugs

1.02.00 Where high stroking speed , high actuation forces and accurate positioning is critical for the operation of the plant, as in case of HP or LP bypass valves, Separator Drain Valves , hydraulic actuators with electro-hydraulic interface shall be offered.

2.00.00 **GENERAL TECHNICAL REQUIREMENTS**

2.01.00 Bidder shall exercise caution in selecting severe service control valves like ~~BFP recirculation, HP & LP bypass, superheater & reheater attemperator, PRDS for Boiler & Turbine,~~ Feed control station ,~~Soot blower steam pressure, Fuel oil heating and pressurizing ,minimum economizer flow control~~ ,DM make up (emergency / normal), control valves whose down stream are connected to vacuum such as HP/LP heater emergency level control, condenser make up water, ~~separator level control~~ , CEP minimum flow control etc. For such critical applications, Bidder shall offer valves which are proven for similar application. ~~Above valves shall have leakage class equal or better than class-VI with metal-to-metal seating.~~

2.02.00 Valve with ANSI leakage class-V shall be provided for all applications except for the control valves indicated above.

2.03.00 Bidder shall provide redundant control valves for some services such as Main condensate flow control, ~~Superheat attemperation control and Reheat attemperation control as a minimum for high availability.~~ For other application, if the availability criteria for the plant cannot be met even with the best established product, redundant control valves shall be provided.

2.04.00 Control valves shall be located near floor or platform for ease of access and with adequate clearances for maintenance and lay-down and shall be placed as station with upstream motorized isolating valve, down-stream motorized isolating valve, inching duty motorized bypass valve and manual drain valves. Each redundant control valve shall have its upstream motorized and down-stream motorised isolating valves. ~~Where quick shut off requirement is foreseen such as in case of SH & RH attemperation valves, upstream isolation valve shall be pneumatic type.~~

2.05.00 ~~Wherever, steam conditioning calls for , Pressure reducing & desuperheating, combined PRDS type valves shall be offered.~~

2.06.00 Control Valve shall be furnished with IBR certification wherever required .

2.07.00 Valve Body / End Connections

2.07.01 Valve end to end dimension and connection shall be according to ANSI standard, straight through pattern. ~~However, Bidder may offer angle body valve for high pressure drop applications.~~ For high pressure drop applications, construction of the valve shall be such that the gland is not exposed to inlet pressure.

2.07.02 ~~Control valves of 40 mm. size and above with line pressure up to 50 Kg / Sq. cm may have flanged or welded end connections.~~

2.07.03 Control valves, used in high pressure services shall have butt welded end connections for size 65mm and above and socket weld end connection for size 50 mm or below.

2.07.04 Control valve body shall be selected as per the ISA GUIdeline. Generally control valve body shall be cast and machined for pressure rating up to 1500 lbs. ~~Above 1500 lbs, valve body shall be of forged steel.~~ For Demineralized Water application, valve body shall be Stainless Steel.

2.07.05 Bonnet joints for all control valves shall be of flanged and bolted type.

2.07.06 Flanged valve shall be rated at no less than class 300 lbs

2.07.07 The direction of flow shall be clearly engraved on the body . Valve tag no, , description or purpose, stroke time shall be painted on all control valve body with black letters on white background in Bold letters.

2.07.08 Valve Body Materialial shall match the process conditionrequirement as per ANSI. . General guideline shall be as follows

SR. NO.	SERVICE		MATERIAL
1.	Non corrosive, non-flashing and non cavitating service for fluid temperature up to 275ºC	:	Cast carbon steel ASTM A216 Gr. WCB , Trim material - 316 SS stellited faced GUIde posts and bushings.
2.	Non corrosive, non-flashing and non cavitating service for fluid temperature above 275ºC	:	Cast alloy steel ASTM A217 Gr. WC9 Trim material - 316 SS stellited faced GUIde posts and bushings.
3.	Severe flashing / cavitating services	:	Alloy steel ASTM A217 Gr. WC9 , Trim material - 440C
4.	Low flashing / cavitating services	:	Alloy steel ASTM A217 Gr. WC6 ,Trim material - 17-4 PH SS
5.	DM water application (condenser hotwell normal, emergency make up etc.)	:	316 stainless steel

2.07.09 Bidder may supply valves with body and trim materials with superior quality than specified material and in such cases Bidder shall furnish the comparison of offered material properties ,such as cavitation resistance , , hardness , tensile strength , strain energy , corrosion and erosion resistance etc. , with specified material for Owner's approval.

2.08.00 Valve Size

The control valve sizing (Cv / Kv) shall be based on following guidelines :

a) The valves shall pass normal flow (MCR condition) with 60 to 70 percent opening for linear characterised valves and between 70 to 80 percent opening for equal percentage characterised valves.

b) The valves shall have adequate rangeability to pass the minimum and maximum flows at 10% and 85% of the valve opening respectively. Valve stem travel range from minimum to maximum flow condition shall not be less than 50% of the total valve stem travel.

c) Valve Cv shall be selected in such a way that the valve shall be capable of handling at least 120% of required maximum flow.

d) The valve selection shall be based on the highest size dictated by the above considerations unless noise, flashing or other factors dictate the final selection.

e) Trim exit outlet velocity as defined in ISA handbook does not exceed 8 m / sec for liquid services , 150 m/sec for steam services anf 50/% of sonic velocity for flashing services The sizing procedure followed shall be as per latest edition of ANSI/ISA or equivalent standard.

2.09.00 Valve Top work

2.09.01 Top work shall be sized so that the valve shall operate properly when upstream pressure is 10 percent above maximum inlet pressure and downstream pressure is atmospheric.

2.09.02 Extended bonnet/ bonnet when maximum temperature fluid is greater than 280^0 C shall be provided and high temperature packing shall also be used for high temperature application.

2.09.03 The gland material shall be chosen to suit the operating temperature. PTFE may be chosen for lower temperature application (232ºC maximum) and for high temperature application graphited asbestos glands are to be provided. For vacuum services,. All valves connected to vacuum on downstream side shall be provided with packing suitable for vacuum applications eg. double vee type chevron packing.

2.10.00 Valve Trim

2.10.01 Valve trim for applications up to leakage class-V shall be stainless steel 316 SS for pressure drop up to 7 Kg/ Sq. cm. For pressure drops above 7 Kg/Sq. cm hard trim (stelliting or equivalent) shall be used. Other alloys or treatment such as nitride shall be used if severe erosion is expected.

2.10.02 Balanced trim valves shall be offered for high shut-off pressure or high pressure drop condition to reduce the size of the actuators.

2.10.03 For flashing services and two stage mixtures, the trim material shall be 17-4 PH SS or equivalent.

2.10.04 If cavitating condition is foreseen, Bidder shall offer multistage or labyrinth trims valves. Trim of severe service valves shall be of multistage and multipath design with number of discrete pressure drop stages to eliminate the chances of erosion, cavitation, noise and vibration throughout the control range of the valve.

2.10.05 Quick replacement type trim shall be considered for easy maintenance.

2.10.06 Plug shall be one-piece construction cast , forged or machined from solid bar stock .Plug shall be screwed or pinned to valve stems or shall be integral with the valve stems.

2.11.00 Noise Level

The equivalent sound level measured at 1.5M above nearest floor level in elevation and 1 M horizontally from the control valve expressed in decibels to a reference of 0.0002 microbar shall not exceed 85 dBA. The noise abatement shall be achieved by valve body & trim design and not by use of silenecers. Valve Actuators

2.12.00 Actuator

2.12.01 Spring-diaphragm type actuators shall generally be used. Piston type actuators shall be offered in case of high shut-off pressure & quick response requirement. Hydraulic actuation system shall be provided for Critical valves as described elsewhere in the specification.

2.12.02 The actuator shall be designed for 150% thrust required for the valve (at shut-off pressure) at an air line supply pressure of 5.5 Kg/Sq. cm.

2.12.03 Diaphragms shall be designed for 200% maximum operating pressure.

2.12.04 Nylon reinforced neoprene is preferred as diaphragm material.

2.12.05 Valve actuators shall be capable of operating at 80^0 C ambient, continuously.

2.12.06 Entire actuator assembly shall be painted with corrosion inhibiting paint.

2.12.07 Air connection size shall be 1/4” NPT (F) unless otherwise dictated by process response time. Integral tubing shall be stainless steel.

2.12.08 Bidder shall indicate the stroking time of the valve assemblies with ositioned and ensure that the stroke time shall meet the process and equipment dynamics and shall be better than 10 seconds.

2.12.09 All actuators shall be of fail safe design signifying that the spring direction will tend to move the valve (open or close) in a direction safe for the process. “Failure to Open” or “Failure to Close” shall be marked on the actuator.

2.12.10 Hydraulic actuation system

The system shall consist of , but not limited to , Hydraulic cylinder , proportional valve with blocking unit , SMART positioner with position transmitter , SOVs , safety bypass unit , safety control unit , Hydraulic supply unit and local controller cubicle with controller unit

2.13.00 Valve Positioners

2.13.01 All regulating service valves shall be offered with HART protocol based Smart Electro Pneumatic Positioners to ensure accuracy and repeatability of response.

2.13.02 Positioners shall have integral non contact type position transmitter, input and output gauges, local keypad & display and 4-20 mA DC output to DDCMIS in CCR.

2.13.03 Positioners shall be capable of functioning under hot, humid and vibrating conditions.

2.13.04 Positioner casings shall be dust tight, corrosion resistant and weatherproof to IP 65 .and explosion proof in hazardous areas.

2.13.05 In general, positioner shall operate at signal range 4 – 20 mA DC for the full travel of the valve. Split range operation in few cases may be required.

2.13.06 Remote calibration from control room shall be possible through HART management station.

2.14.00 Performance

2.14.01 Performance of the complete assembly of the control valves shall be better than +/- 1% of FS for linearity , +/- 0.5 % of FS for hysteresis , 1% for accuracy.

2.15.00 Valve Accessories

2.15.01 Accessories shall include side mounted hand wheels, open & close , intermediate (as applicable) limit switches for both regulating and On off valves ,, junction boxes with 20 % spare terminals , Air filter regulators , airlock relays , volume chambers etc. Solenoid valve (SOV) wherever required shall be furnished. Each limit switch shall have not less than 2 NO & 2 NC contacts with contact rating 5A , 240 V AC / 0.5 A , 220 V DC . SOV shall have SS bar stock body , SS316 Trim , SS coil enclosure , Class H insulation Air filter regulator shall have sintered bronze filter element with maximum 5 microns filter size & 2 inch dial size pressure gauges. .Protection class of all Limit switches , junction boxes , SOV etc. shall have protection class IP 65 and explosion proof for hazardous areas.

2.15.02 Air distribution line to all final control elements like control valves, pneumatic dampers (both regulating / on-off type) , SOV operated valves shall be through SS manifolds and SS isolating valves only. These valves shall be properly tagged also with KKS tag no. and description of final control element / instrument for which they are intended.

2.16.00 Test and Examination

All valves shall be tested in accordance with the Quality Assurance programme agreed between the Owner and Bidder , which shall meet the requirements of IBR and other applicable codes mentioned elsewhere in the specification . The test shall include but not be limited to Non destructive test , Hydrostatic shell test prior to seat leakage test , Seat leakage test , Valve closure test , Functional test of fully assembled valves including actuators and accessories. CV test etc. For all control valves Cv test shall be witnessed by Owner.

10.00.00 SOLENOID VALVES

1.	Operating Principle	:	Electromagnetic (noiseless)
2.	Coil voltage rating	:	240 V AC /24 V DC (as required)
3.	Ways	:	2/3/4 way
4.	Port size	:	1/4" NPT all ports
5.	Body	:	SS bar stock
	Trim	:	SS-316
6.	Duty	:	Suitable for continuous energization
7.	Sealing	:	Airtight and leak proof
8.	Ambient Temperature	:	0 - 50 ^{O} C
9.	Fluid Temperature	:	0-150 ^{O} C (approx.)
10.	Coil Enclosure	:	Stainless Steel
11.	Insulation	:	Class-H
12.	Coil Casing	:	IP-65 (Explosion proof for NEC Class-1, Division-1 area)
13.	Mounting	:	On pipe or on panel
14.	Cable Connection	:	½" NPT
15.	Accessories	:	Cable glands, SS Tag plate

suitably sloped and shall have one end flanged and extending beyond the rack for connection to plant drain header..

Each rack shall be provided with one receptacle, one light fixture with wire guard and one lighting switch. Outlet box, switch box and device covers shall be galvanized stamped steel. Light fixtures shall be installed on the canopy of the rack

4.03.06 Power supplies for miscellaneous devices shall be provided with MCB located within the enclosures. MCB shall be mounted in fuse blocks. Nameplates shall be furnished above the MCB blocks, identifying the devices being served.

4.04.00 JUNCTION BOX

1.	Type of Enclosure	:	Dust tight & weatherproof conforming to IP 65
2.	Material	:	3 mm sheet steel / fiberglass reinforced polyester(UV stabilized)
3.	Type of Cover	:	Solid unhinged with retention chain / Screwed at all four corners
4.	Paint	:	RAL 7032-Siemens Grey
5.	Mounting	:	Surface / Two (2) inch Pipe stanchion (At a dry compartment at one side of the enclosure / rack with front opening type door)
6.	Cable Entry	:	3 mm (min) Bottom / side Gland plate
7.	Gasket	:	Neoprene
8.	Grounding	:	Brass earth lug with green screw head External-2 nos , Internal-1no. (M6)
9.	Number of Drain Holes	:	Two at bottom capped
10.	Identification	:	Label for JB and Tags for cable
11.	Accessories	:	a) Rail mounted cage clamp type screwless terminals (suitable for conductor size up to 2.5sq.mm of suitable voltage grade) with markers and 20% spare terminals b) Cable gland (Brass) & raceways

c) Ferrules & lugs (Brass)

d) Aluminum back panel

e) Canopy at top

f) Mounting brackets

g) bolts and nuts made of brass etc.

as spare. This shall be in addition to the terminal blocks for 20% wired channel.

b) Terminal assignment in the termination cabinet will be such that cables originating from a field junction box shall be terminated in one termination cabinet only. This will facilitate use of multi-core cable for field wiring. For each incoming cable an additional terminal block shall be provided adjacent to signal wire termination point for termination and continuation of cable screen.

c) Relay used for interfacing with other system shall be modular, plug in type and provided with snap on transparent cover. Rating shall be of 24V DC and shall have at least 2 changeover contacts. All contacts of the relay shall be terminated in terminal blocks. Each relay shall be provided with "Coil on" indication LED and coil protection diode. At least 10% of installed capacity shall be kept as spares.

d) Spare requirement

Bidder shall provide at least 20% or minimum two numbers, whichever are higher, spare channels as hot on rail spares in each configured I / O modules. In addition to this 10% or minimum one number, whichever is higher, extra assigned complete spare I / O modules mounted on rails in sub racks as hot on rail spare for each category of installed I / O modules shall also be provided. Spare modules shall be distributed over each controller group. Spare channel and modules shall be fully wired up to termination cabinets.

15.04.00 Controller

15.04.01 Controller shall be Microprocessor based, multi-loop and multi-function type. Controller shall be based on 32-bit processor. These can be configured from hand-held station through front plug and from Engineering Terminal .Diagnostic features shall include invalid command checking, automatic periodic illegal address detection, routine check and memory parity check. , time - out checking, watch dog report to engineering terminal ,processor status display LED, processor fault.

15.05.00 Operator's & Engineering Station

1.	Processor	: Latest , minimum Intel Core i5
2.	Configuration	: Tower
3.	Internal clock	: 3.2 GHz (minm.)
4.	Architecture	: 32 bit
5.	Video Card	: PCI
6.	RAM	: 4 GB (Minimum) DDR

7.	Hard drive	: 500 GB SATA
8.	Cache	: 512 KB Level 2
9.	CD/DVD Drive	: CD - Both Read & Write for OWS. Both CD & DVD Read & Write for ES
10.	Audio controller	: 16-bit
11.	Operating system	: Latest , Window
12.	Graphic accelerator	: 8MB (minm.)
13.	Communication ports	: 2nos. (minm.) Ethernet ports(1000 MB) , 4 nos. USB ports (minm.)

15.06.00 Server including Historical Storage Unit

15.06.01 Two nos. Intel , Xeon 1.9 GHz(minm.) processor with 2 x 4GB (minm.) DDR RAM ,3 nos. 600 GB SAS Hard disk , DVD +/- RW Drive . RAID 5 configuration , Ethernet ports(1000 MB) , Windows (latest) .

15.07.00 Monitor

1.	Type	: TFT monitor
2	Screen diagonal	: 24 inch flat
3	Display	: XGA or better
4	Resolution	: 1024 X 768 or better
5	Degree of protection	: IP-30
6	External Controls	: Brightness, contrast, Horizontal / Vertical amplification & shift
7	Power supply	: 240 V, 50 Hz, 1 phase
8	Ambient temperature	: 0-50 ^{O} C
9	Humidity	: 95% non-condensing
10	Version	: To suit industrial application

b) Key Board

1.	Type	: Flat spill proof membrane type or Positive depression type
2.	Different keys	a) Soft and user defined function keys for software/ programming including text correction, scan rate alteration, zooming/ flashing color selection etc. b) Panel select keys for alarm summary, control loop display, overview, trend, graphic, operator guide message etc. c) Standard Alphanumeric keys d) Alarm acknowledge keys e) Cursor keys f) Mode/loop status switching keys g) Setting change keys h) Print-out command keys i) Other keys as required to operate the system
3.	Key lock	: Lockable type push button mounted on keyboard
4.	Life Expectancy	50 million cycles per key
5.	Version	: To suit industrial application

c) Laser Printer

1.	Type	: Laser jet , tabletop, network ready
2.	Printer Memory	: 256 MB (min.)
3.	Speed	: Monochrome 24 ppm - A4, Color 6 ppm - A3/A4
4.	Resolution	: 1200 x 1200 DPI in color
5.	No. of color (Basic)	: 4 (four) minimum

13.	Fixing of name plate	:	Stainless steel pan head screws
14.	Name plate material	:	Laminated phenolic (3 layers)
15.	Lettering	:	Black with white engraved
16.	Mounting of terminal blocks	:	Vertical angle support bracket tack welded on sheet steel plate, screwed on internal wall of enclosure

2.05.00 FURNITURE

~~All the furnitures in the Central / Local control Room (s), Engineers' rooms, Instrument laboratory , SWAS Room & any other rooms with C&I equipments located in different plant buildings under Bidder's scope shall be included in Bidder's scope of supply.~~ Bidder shall provide following industrial grade furniture items as a minimum from reputed manufacturers/suppliers meeting International Standards. The furniture shall be modular and latest with ease of operational features. The furniture shall be modern, aesthetically designed, modular, flexible, space saving and future safe

2.05.01 WORK STATION FURNITURE

Modular work station furniture, suitable for mounting servers & historians, programmer stations, PC based systems, printers (A4/A3 color laserjet) etc. shall be provided.

2.05.02 PC RACK

PC Racks shall be provided to mount CPUs of workstations/PCs of OWS/LVS etc. in control room. For each PC / workstation / monitor at least one chair shall be included.

2.05.03 CHAIRS

Industry standard revolving chairs with wheels and with provision for adjustment of height (hydraulically/gas lift) shall be provided for the operators, unit-in-charge & other personnel in control room area. These shall be designed for sitting for long duration such that these are comfortable for the back.

2.05.04 TABLES

Industry standard computer tables shall be provided & shall be as approved by Owner during detailed Engineering. Glass top teak wood horse shoe shaped table with vertical file mounting arrangement (two layers to house approx. 40 Nos of files and lockable drawers at both ends) for Engineering Room shall be provided.

SECTION-C

DATASHEET A&B

Tag No.: ASV-8 / LBG51AA001 Qty.: 1 no. Data Sheet No. PES-145-06-DS1-0
P&ID No.: PE-DG-410-100-N103

DATA SHEET – A & B

DATA SHEET – A FOR CONTROL VALVE (WITH PNEUMATIC ACTUATOR) (TO BE FILLED BY PURCHASER)			DATA SHEET – B (TO BE FILLED UP BY BIDDER)
GENERAL	PROJECT	APPDCL - 1 X 800 MW KRISHNAPATTANAM TPS	.....
	SERVICE	D/A PEGGING FROM AUX. STEAM HEADER	.....
	LOCATION	[■] INDOOR [] OUTDOOR	.....
	DUTY	[] ON/OFF [■] MODULATING	.....
	PIPE SIZE (inlet / outlet)	273 x 6.35 | 508 x 10	.....
	PIPE MATERIAL (inlet / outlet)	SA 106 GR B | SA 672 GR B70	.....|.....
BODY	MODEL NO.	BIDDER TO INDICATE	.....
	TYPE OF BODY: GUIDING: NO. OF PORTS	[■] GLOBE [] ANGLE | [] TOP [■] CAGE | ONE	.....|.....|.....|.....
	BODY SIZE: PORT SIZE: DESIGN CV	BIDDER TO INDICATE	.....|.....|.....
	END CONNECTION & RATING (ANSI)	[■] BWE [] SWE [] FLANGED	.....
	BODY MATERIAL	[] A216 WCB [■] A217 WC9 [] SS [] A217 CS	.....
		[] A351 CF8M	.....
	PACKING: MATERIAL SINGLE / DOUBLE	[] PTFE [■] GRAFOIL [] DOUBLE [■] SINGLE	.....|.....
	BONNET TYPE	[] STD [■] EXTENDED [] FINNED	.....
	TRIM FORM	[■] LINEAR [] EQ. PERCENTAGE	.....
		[] QUICK OPEN (ON/OFF)	
	TRIM MATERIAL: SEAT | PLUG	SS 316 STELLITED | SS 316 STELLITED	.....|.....
	: CAGE | GUIDE BUSH	SS 316 STELLITED | SS 316 STELLITED	.....|.....
	FLOW	BIDDER TO INDICATE (BELOW/ABOVE SEAT)	.....
	OUTLET VELOCITY	[] < 7 M/SEC(WATER) | [■] MAC NO. < 1/3 (STM)	.....
	REQUIRED LEAKAGE CLASS	[] II [] III [] IV [■] V [] VI	.....
	NOISE LEVEL (dBA) (spec. 3.1.14)	LESS THAN 85 dBA	.....
	VACUUM SERVICE	[] YES [■] NO	.....
	ANTI CAVITATION TRIM	[] YES [■] NO	.....
PNEUMATIC ACTUATOR	MODEL NO. & SIZE	BIDDER TO INDICATE	.....|.....
	CLOSE AT : OPEN AT (KG/CM2g)	TO SUIT ACTUATOR (AIR TO CLOSE)	.....|.....
	TRAVEL TIME FOR	<10 Sec	.....
	OPEN TO CLOSE, CLOSE TO OPEN		.....
	VLV POSN. ON ELEC SIGNAL FAILURE	[■] TO OPEN [] STAYPUT [] TO CLOSE	.....
	VALVE POSN. ON SUPPLY AIR FAILURE	[■] STAYPUT	.....
ACCESSORIES	SMART POSITIONER	[■] REQUIRED [] NOT REQUIRED	.....
	AIR FILTER REGULATOR	[■] REQUIRED [] NOT REQUIRED	.....
	AIR LOCK RELAY	[■] REQUIRED [] NOT REQUIRED	.....
	POSITION LIMIT SWITCH	[■] REQUIRED [] NOT REQUIRED	.....
	POSITION TRANSMITTER	PART OF SMART POSITIONER	.....
	SOLENOID VALVE	[■] REQUIRED [] NOT REQUIRED	.....
	E/P CONVERTER	PART OF SMART POSITIONER	.....
	JUNCTION BOX	[■] REQUIRED [] NOT REQUIRED	.....
	HAND WHEEL (SIDE MOUNTED)	[■] REQUIRED	.....
	LOCAL POSITION INDICATOR	[■] REQUIRED	.....
	ELECTRO PNEUMATIC POSITIONER	[] REQUIRED [■] NOT REQUIRED	.....

Tag No.: ASV-8 / LBG51AA101 Qty.: 1 no. Data Sheet No. PES-145-06-DS1-0
P&ID No.: PE-DG-410-100-N103

DATA SHEET – A & B

DATA SHEET – A FOR CONTROL VALVE (WITH PNEUMATIC ACTUATOR) (TO BE FILLED BY PURCHASER)			DATA SHEET – B (TO BE FILLED UP BY BIDDER)
PERFORMANCE OF VALVE	LINEARITY HYSTERISIS SENSITIVITY ACCURACY (OVERALL)	± 1% ± 0.5% ± 0.5% ± 1%	....

SERVICE CONDITION

SL. No. +	LOAD	FLOW (T/HR)	INLET PR. KG/CM2(A)	OUTLET PR. KG/CM2(A)	TEMP DEG (C)	CALC ULATED CV	% VLV LIFT	VLV O/L VELOCITY
1.	7.5% BMCR	15	16	1.65	290			
2.	15% BMCR (COLD)	42	16	1.7	290			
3.	15% BMCR (HOT)	60	16	3.7	290			
4.	NEXT UNIT START UP W/O RC PUMP	110	16	2	290			

VALVE TYPE	[] CAVITATION [] FLASHING [■] HIGH DP
MAX SHUT OFF PRESS (KG/CM2g) 20 BODY DESIGN : PRESS (KG/CM2g) | TEMP (DEG C) 20 | 310 IBR FORM III-C [■] REQUIRED [] NOT REQUIRED	....|..... .....
TOTAL WEIGHT (VALVE + ACTUATOR + ACCESSORIES) Kg	.....

Tag No.: CRHV-6 / LBQ10AA101 Qty.: 1 no. Data Sheet No. PES-145-06-DS1-0
P&ID No.: PE-DG-410-100-N103

DATA SHEET – A & B

DATA SHEET – A FOR CONTROL VALVE (WITH PNEUMATIC ACTUATOR) (TO BE FILLED BY PURCHASER)			DATA SHEET – B (TO BE FILLED UP BY BIDDER)
GENERAL	PROJECT	APPDCL - 1 X 800 MW KRISHNAPATTANAM TPS	.....
	SERVICE	D/A PEGGING FROM CRH LINE	.....
	LOCATION	[■] INDOOR [] OUTDOOR	.....
	DUTY	[] ON/OFF [■] MODULATING	.....
	PIPE SIZE (inlet / outlet)	406.4 x 16 | 965 x 34	.....
	PIPE MATERIAL (inlet / outlet)	SA 106 GR C | SA 106 GR C	.....|.....
BODY	MODEL NO.	BIDDER TO INDICATE	.....
	TYPE OF BODY: GUIDING : NO. OF PORTS	[■] GLOBE [] ANGLE | [] TOP [■] CAGE | ONE	.....|.....|.....|.....
	BODY SIZE: PORT SIZE: DESIGN CV	BIDDER TO INDICATE	.....|.....|.....
	END CONNECTION & RATING (ANSI)	[■] BWE [] SWE [] FLANGED	.....
	BODY MATERIAL	[] A216 WCB [■] A217 WC9 [] SS [] A217 CS	.....
		[] A351 CF8M	.....
	PACKING: MATERIAL SINGLE / DOUBLE	[] PTFE [■] GRAFOIL [] DOUBLE [■] SINGLE	.....|.....
	BONNET TYPE	[] STD [■] EXTENDED [] FINNED	.....
	TRIM FORM	[■] LINEAR [] EQ. PERCENTAGE	.....
		[] QUICK OPEN (ON/OFF)	
	TRIM MATERIAL: SEAT | PLUG	SS 316 STELLITED | SS 316 STELLITED	.....|.....
	: CAGE | GUIDE BUSH	SS 316 STELLITED | SS 316 STELLITED	.....|.....
	FLOW	BIDDER TO INDICATE (BELOW/ABOVE SEAT)	.....
	OUTLET VELOCITY	[] < 7 M/SEC (WATER) | [■] MAC NO. < 1/3(STM)	.....
	REQUIRED LEAKAGE CLASS	[] II [] III [] IV [■] V [] VI	.....
	NOISE LEVEL (dBA) (spec. 3.1.14)	LESS THAN 85 dBA	.....
	VACUUM SERVICE	[] YES [■] NO	.....
	ANTI CAVITATION TRIM	[] YES [■] NO	.....
PNEUMATIC ACTUATOR	MODEL NO. & SIZE	BIDDER TO INDICATE	.....|.....
	CLOSE AT : OPEN AT (KG/CM2g)	TO SUIT ACTUATOR (AIR TO OPEN)	.....|.....
	TRAVEL TIME FOR	<10 sec	.....
	OPEN TO CLOSE, CLOSE TO OPEN		.....
	VLV POSN. ON ELEC SIGNAL FAILURE	[] TO OPEN [] STAYPUT [■] TO CLOSE	.....
	VALVE POSN. ON SUPPLY AIR FAILURE	[■] STAYPUT	.....
ACCESSORIES	SMART POSITIONER	[■] REQUIRED [] NOT REQUIRED	.....
	AIR FILTER REGULATOR	[■] REQUIRED [] NOT REQUIRED	.....
	AIR LOCK RELAY	[■] REQUIRED [] NOT REQUIRED	.....
	POSITION LIMIT SWITCH	[■] REQUIRED [] NOT REQUIRED	.....
	POSITION TRANSMITTER	PART OF SMART POSITIONER	.....
	SOLENOID VALVE	[■] REQUIRED [] NOT REQUIRED	.....
	E/P CONVERTER	PART OF SMART POSITIONER	.....
	JUNCTION BOX	[■] REQUIRED [] NOT REQUIRED	.....
	HAND WHEEL (SIDE MOUNTED)	[■] REQUIRED	.....
	LOCAL POSITION INDICATOR	[■] REQUIRED	.....
	ELECTRO PNEUMATIC POSITIONER	[] REQUIRED [■] NOT REQUIRED	.....

Tag No.: CRHV-6 / LBQ10AA101 Qty.: 1 no. Data Sheet No. PES-145-06-DS1-0
P&ID No.: PE-DG-410-100-N103

DATA SHEET – A & B

DATA SHEET – A FOR CONTROL VALVE (WITH PNEUMATIC ACTUATOR) (TO BE FILLED BY PURCHASER)			DATA SHEET – B (TO BE FILLED UP BY BIDDER)
PERFORMANCE OF VALVE	LINEARITY HYSTERISIS SENSITIVITY ACCURACY (OVERALL)	± 1% ± 0.5% ± 0.5% ± 1%	....

SERVICE CONDITION

SL. No. +	LOAD	FLOW (T/HR)	INLET PR. KG/CM2(A)	OUTLET PR. KG/CM2(A)	TEMP DEG (C)	CALC ULATED CV	% VLV LIFT	VLV O/L VELOCITY
1.	15% BMCR	42	14.4	3.65	341			
2.	30% BMCR	120	20	3.65	347			
3.	60% BYPASS	214.467	37.14	4.55	360			

VALVE TYPE	[] CAVITATION [] FLASHING [■] HIGH DP
MAX SHUT OFF PRESS (KG/CM2g) 73.5 BODY DESIGN : PRESS (KG/CM2g) | TEMP (DEG C) 73.5 | 365 IBR FORM III-C [■] REQUIRED [] NOT REQUIRED	....|..... .....
TOTAL WEIGHT (VALVE + ACTUATOR + ACCESSORIES) Kg	.....

Tag No.: CDV-22 / LCA50AA101 & CDV-25 / LCA51AA101 Qty.: 2 nos. (One against each Tag No.)
P&ID No.: PE-DG-410-100-N106 Data Sheet No. PES-145-06-DS1-0

DATA SHEET – A & B

DATA SHEET – A FOR CONTROL VALVE (WITH PNEUMATIC ACTUATOR) (TO BE FILLED BY PURCHASER)			DATA SHEET – B (TO BE FILLED UP BY BIDDER)
GENERAL	PROJECT	APPDCL - 1 X 800 MW KRISHNAPATTANAM TPS	.....
	SERVICE	MAIN CONDENSATE CONTROL	.....
	LOCATION	[■] INDOOR [] OUTDOOR	.....
	DUTY	[] ON/OFF [■] MODULATING	.....
	PIPE SIZE (inlet / outlet)	457 x 12.7 | 457 x 12.7	.....
	PIPE MATERIAL (inlet / outlet)	SA 106 GR C | SA 106 GR C	.....|.....
BODY	MODEL NO.	BIDDER TO INDICATE	.....
	TYPE OF BODY: GUIDING : NO. OF PORTS	[■] GLOBE [] ANGLE | [] TOP [■] CAGE | ONE	.....|.....|.....|.....
	BODY SIZE: PORT SIZE: DESIGN CV	BIDDER TO INDICATE	.....|.....|.....
	END CONNECTION & RATING (ANSI)	[■] BWE [] SWE [] FLANGED	.....
	BODY MATERIAL	[■] A216 WCB [] A217 WC6 [] SS [] A217 CS	.....
		[] A351 CF8M	.....
	PACKING: MATERIAL SINGLE / DOUBLE	[] PTFE [■] GRAFOIL [] DOUBLE [■] SINGLE	.....|.....
	BONNET TYPE	[■] STD [] EXTENDED [] FINNED	.....
	TRIM FORM	[] LINEAR [■] EQ. PERCENTAGE	.....
		[] QUICK OPEN (ON/OFF)	
	TRIM MATERIAL: SEAT | PLUG	SS 316 STELLITED | SS 316 STELLITED	.....|.....
	: CAGE | GUIDE BUSH	SS 316 STELLITED | SS 316 STELLITED	.....|.....
	FLOW	BIDDER TO INDICATE (BELOW/ABOVE SEAT)	.....
	OUTLET VELOCITY	[■] < 7 M/SEC (WATER) | [] MAC NO. < 1/3(STM)	.....
	REQUIRED LEAKAGE CLASS	[] II [] III [] IV [■] V [] VI	.....
	NOISE LEVEL (dBA) (spec. 3.1.14)	LESS THAN 85 dBA	.....
	VACUUM SERVICE	[] YES [■] NO	.....
	ANTI CAVITATION TRIM	[] YES [■] NO	.....
PNEUMATIC ACTUATOR	MODEL NO. & SIZE	BIDDER TO INDICATE	.....|.....
	CLOSE AT : OPEN AT (KG/CM2g)	TO SUIT ACTUATOR (AIR TO OPEN)	.....|.....
	TRAVEL TIME FOR	<10 SEC	.....
	OPEN TO CLOSE, CLOSE TO OPEN		.....
	VLV POSN. ON ELEC SIGNAL FAILURE	[] TO OPEN [■] STAYPUT [] TO CLOSE	.....
	VALVE POSN. ON SUPPLY AIR FAILURE	[■] STAYPUT	.....
ACCESSORIES	SMART POSITIONER	[■] REQUIRED [] NOT REQUIRED	.....
	AIR FILTER REGULATOR	[■] REQUIRED [] NOT REQUIRED	.....
	AIR LOCK RELAY	[■] REQUIRED [] NOT REQUIRED	.....
	POSITION LIMIT SWITCH	[■] REQUIRED [] NOT REQUIRED	.....
	POSITION TRANSMITTER	PART OF SMART POSITIONER	.....
	SOLENOID VALVE	[■] REQUIRED [] NOT REQUIRED	.....
	E/P CONVERTER	PART OF SMART POSITIONER	.....
	JUNCTION BOX	[■] REQUIRED [] NOT REQUIRED	.....
	HAND WHEEL (SIDE MOUNTED)	[■] REQUIRED	.....
	LOCAL POSITION INDICATOR	[■] REQUIRED	.....
	ELECTRO PNEUMATIC POSITIONER	[] REQUIRED [■] NOT REQUIRED	.....

Tag No.: CDV-22 / LCA50AA101 & CDV-25 / LCA51AA101
P&ID No.: PE-DG-410-100-N106

Qty.: 2 nos. (One against each Tag No.)
Data Sheet No. PES-145-06-DS1-0

DATA SHEET – A & B

DATA SHEET – A FOR CONTROL VALVE (WITH PNEUMATIC ACTUATOR) (TO BE FILLED BY PURCHASER)			DATA SHEET – B (TO BE FILLED UP BY BIDDER)
PERFORMANCE OF VALVE	LINEARITY	± 1%	.....
	HYSTERISIS	± 0.5%	.....
	SENSITIVITY	± 0.5%	.....
	ACCURACY (OVERALL)	± 1%	.....

SERVICE CONDITION

SL. No.	LOAD	FLOW (T/HR)	INLET PR. KG/CM2(A)	OUTLET PR. KG/CM2(A)	TEMP DEG (C)	CALC ULATED CV	% VLV LIFT	VLV O/L VELOCITY
1.	DESIGN POINT (PUMP)	1835	28	26	42.7			
2.	60% LOAD	937.109	35	22	39.3			
3.	100% MCR	1526.438	33	24	42.5			
4.	VWO	1648.061	31	26	42.7			
5.	MIN. (10% LOAD)	152.6	38	8	40			
6.	HP-LP Bypass	1506.347	22	16	52.3			

VALVE TYPE	[] CAVITATION [] FLASHING [■] HIGH DP
MAX SHUT OFF PRESS (KG/CM2g) 47 BODY DESIGN : PRESS (KG/CM2g) | TEMP (DEG C) 47 | 55 IBR FORM III-C [] REQUIRED [■] NOT REQUIRED	....|..... .....
TOTAL WEIGHT (VALVE + ACTUATOR + ACCESSORIES) Kg	.....

Tag No.: CDV-40 / LCA31AA101 Qty.: 1 no. Data Sheet No. PES-145-06-DS1-0
P&ID No.: PE-DG-410-100-N106

DATA SHEET – A & B

DATA SHEET – A FOR CONTROL VALVE (WITH PNEUMATIC ACTUATOR) (TO BE FILLED BY PURCHASER)			DATA SHEET – B (TO BE FILLED UP BY BIDDER)
GENERAL	PROJECT	APPDCL - 1 X 800 MW KRISHNAPATTANAM TPS	.....
	SERVICE	GSC MIN. FLOW RECIRCULATION	.....
	LOCATION	[■] INDOOR [] OUTDOOR	.....
	DUTY	[] ON/OFF [■] MODULATING	.....
	PIPE SIZE (inlet / outlet)	168.3X7.11 | 168.3 x 7.11	.....
	PIPE MATERIAL (inlet / outlet)	SA 106 GR C | SA 106 GR C	.....|.....
BODY	MODEL NO.	BIDDER TO INDICATE	.....
	TYPE OF BODY: GUIDING : NO. OF PORTS	[■] GLOBE [] ANGLE | [] TOP [■] CAGE | ONE	.....|.....|.....|.....
	BODY SIZE: PORT SIZE: DESIGN CV	BIDDER TO INDICATE	.....|.....|.....
	END CONNECTION & RATING (ANSI)	[■] BWE [] SWE [] FLANGED	.....
	BODY MATERIAL	[] A216 WCB [■] A217 WC6 [] SS [] A217 CS	.....
		[] A351 CF8M	.....
	PACKING: MATERIAL SINGLE / DOUBLE	[] PTFE [■] GRAFOIL [■] DOUBLE [] SINGLE	.....|.....
	BONNET TYPE	[■] STD [] EXTENDED [] FINNED	.....
	TRIM FORM	[■] LINEAR **(MULTI STAGE & MULTI PATH)**	.....
		[] EQ. PERCENTAGE [] QUICK OPEN (ON/OFF)	
	TRIM MATERIAL: SEAT | PLUG	17-4 PH SS | 17-4 PH SS	.....|.....
	: CAGE | GUIDE BUSH	17-4 PH SS | 17-4 PH SS	.....|.....
	FLOW	BIDDER TO INDICATE (BELOW/ABOVE SEAT)	.....
	OUTLET VELOCITY	[■] < 7 M/SEC (WATER) | [] MAC NO. < 1/3(STM)	.....
	REQUIRED LEAKAGE CLASS	[] II [] III [] IV [■] V [] VI	.....
	NOISE LEVEL (dBA) (spec. 3.1.14)	LESS THAN 85 dBA	.....
	VACUUM SERVICE	[■] YES [] NO	.....
	ANTI CAVITATION TRIM	[■] YES [] NO	.....
PNEUMATIC ACTUATOR	MODEL NO. & SIZE	BIDDER TO INDICATE	.....|.....
	CLOSE AT : OPEN AT (KG/CM2g)	TO SUIT ACTUATOR (AIR TO CLOSE)	.....|.....
	TRAVEL TIME FOR	<10 sec	.....
	OPEN TO CLOSE, CLOSE TO OPEN		.....
	VLV POSN. ON ELEC SIGNAL FAILURE	[■] TO OPEN [] STAYPUT [] TO CLOSE	.....
	VALVE POSN. ON SUPPLY AIR FAILURE	[■] STAYPUT	.....
ACCESSORIES	SMART POSITIONER	[■] REQUIRED [] NOT REQUIRED	.....
	AIR FILTER REGULATOR	[■] REQUIRED [] NOT REQUIRED	.....
	AIR LOCK RELAY	[■] REQUIRED [] NOT REQUIRED	.....
	POSITION LIMIT SWITCH	[■] REQUIRED [] NOT REQUIRED	.....
	POSITION TRANSMITTER	PART OF SMART POSITIONER	.....
	SOLENOID VALVE	[■] REQUIRED [] NOT REQUIRED	.....
	E/P CONVERTER	PART OF SMART POSITIONER	.....
	JUNCTION BOX	[■] REQUIRED [] NOT REQUIRED	.....
	HAND WHEEL (SIDE MOUNTED)	[■] REQUIRED	.....
	LOCAL POSITION INDICATOR	[■] REQUIRED	.....
	ELECTRO PNEUMATIC POSITIONER	[] REQUIRED [■] NOT REQUIRED	.....

Tag No.: CDV-40 / LCA31AA101 Qty.: …1 no. Data Sheet No. PES-145-06-DS1-0

DATA SHEET – A & B

DATA SHEET – A FOR CONTROL VALVE (WITH PNEUMATIC ACTUATOR) (TO BE FILLED BY PURCHASER)			DATA SHEET – B (TO BE FILLED UP BY BIDDER)
PERFORMANCE OF VALVE	LINEARITY	± 1%	……
	HYSTERISIS	± 0.5%	……
	SENSITIVITY	± 0.5%	……
	ACCURACY (OVERALL)	± 1%	……

SERVICE CONDITION

SL. No. +	LOAD	FLOW (T/HR)	INLET PR. KG/CM2(A)	OUTLET PR. KG/CM2(A)	TEMP DEG (C)	CALC ULATED CV	% VLV LIFT	VLV O/L VELOCITY
1.	MIN.	32.4	42.5	0.3	49			
2.	MAX	324	40.5	0.7	50			

VALVE TYPE	[■] CAVITATION [] FLASHING [■] HIGH DP
MAX SHUT OFF PRESS (KG/CM2g) 47 BODY DESIGN : PRESS (KG/CM2g) | TEMP (DEG C) 47/VACUUM | 55 IBR FORM III-C [] REQUIRED [■] NOT REQUIRED	…… ……|…… ……
TOTAL WEIGHT (VALVE + ACTUATOR + ACCESSORIES) Kg	……

Tag No.: CDV-46 / LCA41AA101 Qty.: 1 no. Data Sheet No. PES-145-06-DS1-0
P&ID No.: PE-DG-410-100-N106

DATA SHEET – A & B

DATA SHEET – A FOR CONTROL VALVE (WITH PNEUMATIC ACTUATOR) (TO BE FILLED BY PURCHASER)			DATA SHEET – B (TO BE FILLED UP BY BIDDER)
GENERAL	PROJECT	APPDCL - 1 X 800 MW KRISHNAPATTANAM TPS	.....
	SERVICE	EXCESS RETURN TO CST	.....
	LOCATION	[■] INDOOR [] OUTDOOR	.....
	DUTY	[] ON/OFF [■] MODULATING	.....
	PIPE SIZE (inlet / outlet)	219.1 x 8.18 | 219.1 x 8.18	.....
	PIPE MATERIAL (inlet / outlet)	SA 106 GR C | SA 106 GR C	.....|.....
BODY	MODEL NO.	BIDDER TO INDICATE	.....
	TYPE OF BODY: GUIDING : NO. OF PORTS	[] GLOBE [■] ANGLE | [] TOP [■] CAGE | ONE	.....|.....|.....|.....
	BODY SIZE: PORT SIZE: DESIGN CV	BIDDER TO INDICATE	.....|.....|.....
	END CONNECTION & RATING (ANSI)	[■] BWE [] SWE [] FLANGED	.....
	BODY MATERIAL	[] A216 WCB [■] A217 WC6 [] SS [] A217 CS	.....
		[] A351 CF8M	.....
	PACKING: MATERIAL SINGLE / DOUBLE	[] PTFE [■] GRAFOIL [] DOUBLE [■] SINGLE	.....|.....
	BONNET TYPE	[■] STD [] EXTENDED [] FINNED	.....
	TRIM FORM	[■] LINEAR [] EQ. PERCENTAGE	.....
		[] QUICK OPEN (ON/OFF)	
	TRIM MATERIAL: SEAT | PLUG	17-4 PH SS | 17-4 PH SS	.....|.....
	: CAGE | GUIDE BUSH	17-4 PH SS | 17-4 PH SS	.....|.....
	FLOW	BIDDER TO INDICATE (BELOW/ABOVE SEAT)	.....
	OUTLET VELOCITY	[■] < 7 M/SEC (WATER) | [] MAC NO. < 1/3(STM)	.....
	REQUIRED LEAKAGE CLASS	[] II [] III [] IV [■] V [] VI	.....
	NOISE LEVEL (dBA) (spec. 3.1.14)	LESS THAN 85 dBA	.....
	VACUUM SERVICE	[] YES [■] NO	.....
	ANTI CAVITATION TRIM	[■] YES [] NO	.....
PNEUMATIC ACTUATOR	MODEL NO. & SIZE	BIDDER TO INDICATE	.....|.....
	CLOSE AT : OPEN AT (KG/CM2g)	TO SUIT ACTUATOR (AIR TO CLOSE)	.....|.....
	TRAVEL TIME FOR		.....
	OPEN TO CLOSE, CLOSE TO OPEN	<10 sec	.....
	VLV POSN. ON ELEC SIGNAL FAILURE	[] TO OPEN [■] STAYPUT [] TO CLOSE	.....
	VALVE POSN. ON SUPPLY AIR FAILURE	[■] STAYPUT	.....
ACCESSORIES	SMART POSITIONER	[■] REQUIRED [] NOT REQUIRED	.....
	AIR FILTER REGULATOR	[■] REQUIRED [] NOT REQUIRED	.....
	AIR LOCK RELAY	[■] REQUIRED [] NOT REQUIRED	.....
	POSITION LIMIT SWITCH	[■] REQUIRED [] NOT REQUIRED	.....
	POSITION TRANSMITTER	PART OF SMART POSITIONER	.....
	SOLENOID VALVE	[■] REQUIRED [] NOT REQUIRED	.....
	E/P CONVERTER	PART OF SMART POSITIONER	.....
	JUNCTION BOX	[■] REQUIRED [] NOT REQUIRED	.....
	HAND WHEEL (SIDE MOUNTED)	[■] REQUIRED	.....
	LOCAL POSITION INDICATOR	[■] REQUIRED	.....
	ELECTRO PNEUMATIC POSITIONER	[] REQUIRED [■] NOT REQUIRED	.....

Tag No.: CDV-46 / LCA41AA101 Qty.: 1 no. Data Sheet No. PES-145-06-DS1-0
P&ID No.: PE-DG-410-100-N106

DATA SHEET – A & B

DATA SHEET – A FOR CONTROL VALVE (WITH PNEUMATIC ACTUATOR) (TO BE FILLED BY PURCHASER)			DATA SHEET – B (TO BE FILLED UP BY BIDDER)
PERFORMANCE OF VALVE	LINEARITY	± 1%	.....
	HYSTERISIS	± 0.5%	.....
	SENSITIVITY	± 0.5%	.....
	ACCURACY (OVERALL)	± 1%	.....

SERVICE CONDITION

SL. No. +	LOAD	FLOW (T/HR)	INLET PR. KG/CM2(A)	OUTLET PR. KG/CM2(A)	TEMP DEG (C)	CALC ULATED CV	% VLV LIFT	VLV O/L VELOCITY
1.	MIN.	40	36.5	4.0	50			
2.	MAX	415	32.5	5.0	42.7			

VALVE TYPE	[■] CAVITATION [] FLASHING [■] HIGH DP
MAX SHUT OFF PRESS (KG/CM2g) 47 BODY DESIGN : PRESS (KG/CM2g) | TEMP (DEG C) 47 | 55 IBR FORM III-C [] REQUIRED [■] NOT REQUIRED	....|..... .....
TOTAL WEIGHT (VALVE + ACTUATOR + ACCESSORIES) Kg	.....

Tag No.: CDV-67 / LCA34AA101 Qty.: 1 no. Data Sheet No. PES-145-06-DS1-0
P&ID No.: PE-DG-410-100-N111

DATA SHEET – A & B

DATA SHEET – A FOR CONTROL VALVE (WITH PNEUMATIC ACTUATOR) (TO BE FILLED BY PURCHASER)			DATA SHEET – B (TO BE FILLED UP BY BIDDER)
GENERAL	PROJECT	APPDCL - 1 X 800 MW KRISHNAPATTANAM TPS	.....
	SERVICE	CONDENSATE SPRAY TO FLASH TANK-B	.....
	LOCATION	[■] INDOOR [] OUTDOOR	.....
	DUTY	[■] ON/OFF [] MODULATING	.....
	PIPE SIZE (inlet / outlet)	33.4 x 4.55 | 33.4 x 4.55	.....
	PIPE MATERIAL (inlet / outlet)	SA 106 GR B | SA 106 GR B	.....|.....
BODY	MODEL NO.	BIDDER TO INDICATE	.....
	TYPE OF BODY: GUIDING : NO. OF PORTS	[■] GLOBE [] ANGLE | [] TOP [■] CAGE | ONE	.....|.....|.....|.....
	BODY SIZE: PORT SIZE: DESIGN CV	BIDDER TO INDICATE	.....|.....|.....
	END CONNECTION & RATING (ANSI)	[] BWE [■] SWE [] FLANGED	.....
	BODY MATERIAL	[] A216 WCB [■] A217 WC6 [] SS [] A217 CS	.....
		[] A351 CF8M	.....
	PACKING: MATERIAL SINGLE / DOUBLE	[] PTFE [■] GRAFOIL [■] DOUBLE [] SINGLE	.....|.....
	BONNET TYPE	[■] STD [] EXTENDED [] FINNED	.....
	TRIM FORM	[] LINEAR [] EQ. PERCENTAGE	.....
		[■] QUICK OPEN (ON/OFF)	
	TRIM MATERIAL: SEAT | PLUG	17-4 PH SS | 17-4 PH SS	.....|.....
	: CAGE | GUIDE BUSH	17-4 PH SS | 17-4 PH SS	.....|.....
	FLOW	BIDDER TO INDICATE (BELOW/ABOVE SEAT)	.....
	OUTLET VELOCITY	[■] < 7 M/SEC (WATER) | [] MAC NO. < 1/3(STM)	.....
	REQUIRED LEAKAGE CLASS	[] II [] III [] IV [■] V [] VI	.....
	NOISE LEVEL (dBA) (spec. 3.1.14)	LESS THAN 85 dBA	.....
	VACUUM SERVICE	[■] YES [] NO	.....
	ANTI CAVITATION TRIM	[■] YES [] NO	.....
PNEUMATIC ACTUATOR	MODEL NO. & SIZE	BIDDER TO INDICATE	.....|.....
	CLOSE AT : OPEN AT (KG/CM2g)	TO SUIT ACTUATOR (AIR TO CLOSE)	.....|.....
	TRAVEL TIME FOR	<10 sec	.....
	OPEN TO CLOSE, CLOSE TO OPEN		.....
	VLV POSN. ON ELEC SIGNAL FAILURE	[■] TO OPEN [] STAYPUT [] TO CLOSE	.....
	VALVE POSN. ON SUPPLY AIR FAILURE	[■] STAYPUT	.....
ACCESSORIES	SMART POSITIONER	[] REQUIRED [■] NOT REQUIRED	.....
	AIR FILTER REGULATOR	[■] REQUIRED [] NOT REQUIRED	.....
	AIR LOCK RELAY	[■] REQUIRED [] NOT REQUIRED	.....
	POSITION LIMIT SWITCH	[■] REQUIRED [] NOT REQUIRED	.....
	POSITION TRANSMITTER	[] REQUIRED [■] NOT REQUIRED	.....
	SOLENOID VALVE	[■] REQUIRED [] NOT REQUIRED	.....
	E/P CONVERTER	[] REQUIRED [■] NOT REQUIRED	.....
	JUNCTION BOX	[■] REQUIRED [] NOT REQUIRED	.....
	HAND WHEEL (SIDE MOUNTED)	[■] REQUIRED	.....
	LOCAL POSITION INDICATOR	[■] REQUIRED	.....
	ELECTRO PNEUMATIC POSITIONER	[] REQUIRED [■] NOT REQUIRED	.....

Tag No.: CDV-67 / LCA34AA101 Qty.: 1 no. Data Sheet No. PES-145-06-DS1-0
P&ID No.: PE-DG-410-100-N111

DATA SHEET – A & B

DATA SHEET – A FOR CONTROL VALVE (WITH PNEUMATIC ACTUATOR) (TO BE FILLED BY PURCHASER)			DATA SHEET – B (TO BE FILLED UP BY BIDDER)
PERFORMANCE OF VALVE	LINEARITY HYSTERISIS SENSITIVITY ACCURACY (OVERALL)	NOT APPLICABLE #	....

SERVICE CONDITION	SL. No. +	LOAD	FLOW (T/HR)	INLET PR. KG/CM2(A)	OUTLET PR. KG/CM2(A)	TEMP DEG (C)	CALC ULATED CV	% VLV LIFT	VLV O/L VELOCITY
	1.	MAX.	10	35.0	0.5	50			
	VALVE TYPE						[■] CAVITATION [] FLASHING [■] HIGH DP		
	MAX SHUT OFF PRESS (KG/CM2g) 47 BODY DESIGN : PRESS (KG/CM2g) | TEMP (DEG C) 47/VACUUM | 55 IBR FORM III-C [] REQUIRED [■] NOT REQUIRED						....|.....		
TOTAL WEIGHT (VALVE + ACTUATOR + ACCESSORIES) Kg							.....		

NOTES: ANTI CAVITATION TRIM SHALL BE PROVIDED

THESE PERFORMANCE PARAMETERS ARE NOT APPLICABLE FOR ON/OFF VALVES (OPERATED THROUGH SOLENOID).

Tag No.: CDV-72 / LCA33AA101 Qty.: 1 no. Data Sheet No. PES-145-06-DS1-0
P&ID No.: PE-DG-410-100-N106

DATA SHEET – A & B

DATA SHEET – A FOR CONTROL VALVE (WITH PNEUMATIC ACTUATOR) (TO BE FILLED BY PURCHASER)			DATA SHEET – B (TO BE FILLED UP BY BIDDER)
GENERAL	PROJECT	APPDCL - 1 X 800 MW KRISHNAPATTANAM TPS	.....
	SERVICE	CONDENSATE FOR VALVE GLAND SEALING	.....
	LOCATION	[■] INDOOR [] OUTDOOR	.....
	DUTY	[] ON/OFF [■] MODULATING	.....
	PIPE SIZE (inlet / outlet)	60.3 x 5.54 | 60.3 x 5.54	.....
	PIPE MATERIAL (inlet / outlet)	SA 106 GR B | SA 106 GR B	.....|.....
BODY	MODEL NO.	BIDDER TO INDICATE	.....
	TYPE OF BODY: GUIDING : NO. OF PORTS	[■] GLOBE [] ANGLE | [] TOP [■] CAGE | ONE	.....|.....|.....|.....
	BODY SIZE: PORT SIZE: DESIGN CV	BIDDER TO INDICATE	.....|.....|.....
	END CONNECTION & RATING (ANSI)	[■] BWE [] SWE [] FLANGED	.....
	BODY MATERIAL	[■] A216 WCB [] A217 WC6 [] SS [] A217 CS	.....
		[] A351 CF8M	.....
	PACKING: MATERIAL SINGLE / DOUBLE	[] PTFE [■] GRAFOIL [] DOUBLE [■] SINGLE	.....|.....
	BONNET TYPE	[■] STD [] EXTENDED [] FINNED	.....
	TRIM FORM	[] LINEAR [■] EQ. PERCENTAGE	.....
		[] QUICK OPEN (ON/OFF)	
	TRIM MATERIAL: SEAT | PLUG	17-4 PH SS | 17-4 PH SS	.....|.....
	: CAGE | GUIDE BUSH	17-4 PH SS | 17-4 PH SS	.....|.....
	FLOW	BIDDER TO INDICATE (BELOW/ABOVE SEAT)	.....
	OUTLET VELOCITY	[■] < 7 M/SEC (WATER) | [] MAC NO. < 1/3(STM)	.....
	REQUIRED LEAKAGE CLASS	[] II [] III [] IV [■] V [] VI	.....
	NOISE LEVEL (dBA) (spec. 3.1.14)	LESS THAN 85 dBA	.....
	VACUUM SERVICE	[] YES [■] NO	.....
	ANTI CAVITATION TRIM	[] YES [■] NO	.....
PNEUMATIC ACTUATOR	MODEL NO. & SIZE	BIDDER TO INDICATE	.....|.....
	CLOSE AT : OPEN AT (KG/CM2g)	TO SUIT ACTUATOR (AIR TO CLOSE)	.....|.....
	TRAVEL TIME FOR	<10 sec	.....
	OPEN TO CLOSE, CLOSE TO OPEN		.....
	VLV POSN. ON ELEC SIGNAL FAILURE	[■] TO OPEN [] STAYPUT [] TO CLOSE	.....
	VALVE POSN. ON SUPPLY AIR FAILURE	[■] STAYPUT	.....
ACCESSORIES	SMART POSITIONER	[■] REQUIRED [] NOT REQUIRED	.....
	AIR FILTER REGULATOR	[■] REQUIRED [] NOT REQUIRED	.....
	AIR LOCK RELAY	[■] REQUIRED [] NOT REQUIRED	.....
	POSITION LIMIT SWITCH	[■] REQUIRED [] NOT REQUIRED	.....
	POSITION TRANSMITTER	PART OF SMART POSITIONER	.....
	SOLENOID VALVE	[■] REQUIRED [] NOT REQUIRED	.....
	E/P CONVERTER	PART OF SMART POSITIONER	.....
	JUNCTION BOX	[■] REQUIRED [] NOT REQUIRED	.....
	HAND WHEEL (SIDE MOUNTED)	[■] REQUIRED	.....
	LOCAL POSITION INDICATOR	[■] REQUIRED	.....
	ELECTRO PNEUMATIC POSITIONER	[] REQUIRED [■] NOT REQUIRED	.....

Tag No.: CDV-72 / LCA33AA101 Qty.: 1 no. Data Sheet No. PES-145-06-DS1-0
P&ID No.: PE-DG-410-100-N106

DATA SHEET – A & B

DATA SHEET – A FOR CONTROL VALVE (WITH PNEUMATIC ACTUATOR) (TO BE FILLED BY PURCHASER)			DATA SHEET – B (TO BE FILLED UP BY BIDDER)
PERFORMANCE OF VALVE	LINEARITY HYSTERISIS SENSITIVITY ACCURACY (OVERALL)	± 1% ± 0.5% ± 0.5% ± 1%	....

SERVICE CONDITION

SL. No. +	LOAD	FLOW (T/HR)	INLET PR. KG/CM2(A)	OUTLET PR. KG/CM2(A)	TEMP DEG (C)	CALC ULATED CV	% VLV LIFT	VLV O/L VELOCITY
1.	MAX.	4	31	3.0	50			

VALVE TYPE	[] CAVITATION [] FLASHING [■] HIGH DP
MAX SHUT OFF PRESS (KG/CM2g) 47 BODY DESIGN : PRESS (KG/CM2g) | TEMP (DEG C) 47 | 55 IBR FORM III-C [] REQUIRED [■] NOT REQUIRED	....|..... .....
TOTAL WEIGHT (VALVE + ACTUATOR + ACCESSORIES) Kg	.....

Tag No.: DRV-14 / LCH30AA101 & DRV-20 / LCH40AA101 Qty.: 2 nos. (One against each Tag No.)
P&ID No.: PE-DG-410-100-N104 Data Sheet No. PES-145-06-DS1-0

DATA SHEET – A & B

DATA SHEET – A FOR CONTROL VALVE (WITH PNEUMATIC ACTUATOR) (TO BE FILLED BY PURCHASER)			DATA SHEET – B (TO BE FILLED UP BY BIDDER)
GENERAL	PROJECT	APPDCL - 1 X 800 MW KRISHNAPATTANAM TPS	.....
	SERVICE	HPH-7A/7B NORMAL DRAIN TO HPH-6A/6B	.....
	LOCATION	[■] INDOOR [] OUTDOOR	.....
	DUTY	[] ON/OFF [■] MODULATING	.....
	PIPE SIZE (inlet / outlet)	273 x 12.7 | 273 x 12.7	.....
	PIPE MATERIAL (inlet / outlet)	SA 106 GR C | SA 106 GR C	.....|.....
BODY	MODEL NO.	BIDDER TO INDICATE	.....
	TYPE OF BODY: GUIDING : NO. OF PORTS	[■] GLOBE [] ANGLE | [] TOP [■] CAGE | ONE	.....|.....|.....|.....
	BODY SIZE: PORT SIZE: DESIGN CV	BIDDER TO INDICATE	.....|.....|.....
	END CONNECTION & RATING (ANSI)	[■] BWE [] SWE [] FLANGED	.....
	BODY MATERIAL	[] A216 WCB [■] A217 WC6 [] SS [] A217 CS	.....
		[] A351 CF8M	.....
	PACKING: MATERIAL SINGLE / DOUBLE	[] PTFE [■] GRAFOIL [] DOUBLE [■] SINGLE	.....|.....
	BONNET TYPE	[■] STD [] EXTENDED [] FINNED	.....
	TRIM FORM	[■] LINEAR [] EQ. PERCENTAGE	.....
		[] QUICK OPEN (ON/OFF)	
	TRIM MATERIAL: SEAT | PLUG	17-4 PH SS | 17-4 PH SS	.....|.....
	: CAGE | GUIDE BUSH	17-4 PH SS | 17-4 PH SS	.....|.....
	FLOW	BIDDER TO INDICATE (BELOW/ABOVE SEAT)	.....
	OUTLET VELOCITY	[■] < 7 M/SEC (WATER) | [] MAC NO. < 1/3(STM)	.....
	REQUIRED LEAKAGE CLASS	[] II [] III [] IV [■] V [] VI	.....
	NOISE LEVEL (dBA) (spec. 3.1.14)	LESS THAN 85 dBA	.....
	VACUUM SERVICE	[] YES [■] NO	.....
	ANTI CAVITATION TRIM	[] YES [■] NO	.....
PNEUMATIC ACTUATOR	MODEL NO. & SIZE	BIDDER TO INDICATE	.....|.....
	CLOSE AT : OPEN AT (KG/CM2g)	TO SUIT ACTUATOR (AIR TO OPEN)	.....|.....
	TRAVEL TIME FOR	<10 sec	.....
	OPEN TO CLOSE, CLOSE TO OPEN		.....
	VLV POSN. ON ELEC SIGNAL FAILURE	[] TO OPEN [] STAYPUT [■] TO CLOSE	.....
	VALVE POSN. ON SUPPLY AIR FAILURE	[■] TO CLOSE	.....
ACCESSORIES	SMART POSITIONER	[■] REQUIRED [] NOT REQUIRED	.....
	AIR FILTER REGULATOR	[■] REQUIRED [] NOT REQUIRED	.....
	AIR LOCK RELAY	[■] REQUIRED [] NOT REQUIRED	.....
	POSITION LIMIT SWITCH	[■] REQUIRED [] NOT REQUIRED	.....
	POSITION TRANSMITTER	PART OF SMART POSITIONER	.....
	SOLENOID VALVE	[■] REQUIRED [] NOT REQUIRED	.....
	E/P CONVERTER	PART OF SMART POSITIONER	.....
	JUNCTION BOX	[■] REQUIRED [] NOT REQUIRED	.....
	HAND WHEEL (SIDE MOUNTED)	[■] REQUIRED	.....
	LOCAL POSITION INDICATOR	[■] REQUIRED	.....
	ELECTRO PNEUMATIC POSITIONER	[] REQUIRED [■] NOT REQUIRED	.....

Tag No.: DRV-14 / LCH30AA101 & DRV-20 / LCH40AA101
P&ID No.: PE-DG-410-100-N104

Qty.: 2 nos. (One against each Tag No.)
Data Sheet No. PES-145-06-DS1-0

DATA SHEET – A & B

DATA SHEET – A FOR CONTROL VALVE (WITH PNEUMATIC ACTUATOR) (TO BE FILLED BY PURCHASER)			DATA SHEET – B (TO BE FILLED UP BY BIDDER)
PERFORMANCE OF VALVE	LINEARITY	± 1%	.....
	HYSTERISIS	± 0.5%	.....
	SENSITIVITY	± 0.5%	.....
	ACCURACY (OVERALL)	± 1%	.....

SERVICE CONDITION

SL. No. +	LOAD	FLOW (T/HR)	INLET PR. KG/CM2(A)	OUTLET PR. KG/CM2(A)	TEMP DEG (C)	CALC ULATED CV	% VLV LIFT	VLV O/L VELOCITY
1.	40% MCR	50.369	23.61	9.71	178.0			
2.	60% MCR	89.477	35.48	14.33	195.5			
3.	100% MCR	195.092	58.79	23.4	221.8			
4.	VWO	215.625	62.9	25.01	225.5			
5.	BMCR	222.813	62.24	24.58	224.6			

VALVE TYPE	[] CAVITATION [■] FLASHING [] HIGH DP
MAX SHUT OFF PRESS (KG/CM2g) 70 BODY DESIGN : PRESS (KG/CM2g) | TEMP (DEG C) 70 | 235 IBR FORM III-C [] REQUIRED [■] NOT REQUIRED	....|..... .....
TOTAL WEIGHT (VALVE + ACTUATOR + ACCESSORIES) Kg	.....

Tag No.: DRV-17 / LCH35AA101 & DRV-23 / LCH45AA101 Qty.: 2 nos. (One against each Tag No.)
P&ID No.: PE-DG-410-100-N104 Data Sheet No. PES-145-06-DS1-0

DATA SHEET – A & B

DATA SHEET – A FOR CONTROL VALVE (WITH PNEUMATIC ACTUATOR) (TO BE FILLED BY PURCHASER)			DATA SHEET – B (TO BE FILLED UP BY BIDDER)
GENERAL	PROJECT	APPDCL - 1 X 800 MW KRISHNAPATTANAM TPS	.....
	SERVICE	HPH-7A/7B ALT. DRAIN TO F/T-A	.....
	LOCATION	[■] INDOOR [] OUTDOOR	.....
	DUTY	[] ON/OFF [■] MODULATING	.....
	PIPE SIZE (inlet / outlet)	273 x 12.7 | 323.9 x 12.7	.....
	PIPE MATERIAL (inlet / outlet)	SA 106 GR C | SA 106 GR C	.....|.....
BODY	MODEL NO.	BIDDER TO INDICATE	.....
	TYPE OF BODY: GUIDING : NO. OF PORTS	[■] GLOBE [] ANGLE | [] TOP [■] CAGE | ONE	.....|.....|.....|.....
	BODY SIZE: PORT SIZE: DESIGN CV	BIDDER TO INDICATE	.....|.....|.....
	END CONNECTION & RATING (ANSI)	[■] BWE [] SWE [] FLANGED	.....
	BODY MATERIAL	[] A216 WCB [■] A217 WC9 [] SS [] A217 CS	.....
		[] A351 CF8M	.....
	PACKING: MATERIAL SINGLE / DOUBLE	[] PTFE [■] GRAFOIL [■] DOUBLE [] SINGLE	.....|.....
	BONNET TYPE	[■] STD [] EXTENDED [] FINNED	.....
	TRIM FORM	[■] LINEAR [] EQ. PERCENTAGE	.....
		[] QUICK OPEN (ON/OFF)	
	TRIM MATERIAL: SEAT | PLUG	440C | 440C	.....|.....
	: CAGE | GUIDE BUSH	440C | 440C	.....|.....
	FLOW	BIDDER TO INDICATE (BELOW/ABOVE SEAT)	.....
	OUTLET VELOCITY	[■] < 7 M/SEC (WATER) | [] MAC NO. < 1/3(STM)	.....
	REQUIRED LEAKAGE CLASS	[] II [] III [] IV [■] V [] VI	.....
	NOISE LEVEL (dBA) (spec. 3.1.14)	LESS THAN 85 dBA	.....
	VACUUM SERVICE	[■] YES [] NO	.....
	ANTI CAVITATION TRIM	[] YES [■] **NO**	.....
PNEUMATIC ACTUATOR	MODEL NO. & SIZE	BIDDER TO INDICATE	.....|.....
	CLOSE AT : OPEN AT (KG/CM2g)	TO SUIT ACTUATOR (AIR TO CLOSE)	.....|.....
	TRAVEL TIME FOR	<10 sec	.....
	OPEN TO CLOSE, CLOSE TO OPEN		.....
	VLV POSN. ON ELEC SIGNAL FAILURE	[■] TO OPEN [] STAYPUT [] TO CLOSE	.....
	VALVE POSN. ON SUPPLY AIR FAILURE	[■] TO OPEN	.....
ACCESSORIES	SMART POSITIONER	[■] REQUIRED [] NOT REQUIRED	.....
	AIR FILTER REGULATOR	[■] REQUIRED [] NOT REQUIRED	.....
	AIR LOCK RELAY	[■] REQUIRED [] NOT REQUIRED	.....
	POSITION LIMIT SWITCH	[■] REQUIRED [] NOT REQUIRED	.....
	POSITION TRANSMITTER	PART OF SMART POSITIONER	.....
	SOLENOID VALVE	[■] REQUIRED [] NOT REQUIRED	.....
	E/P CONVERTER	PART OF SMART POSITIONER	.....
	JUNCTION BOX	[■] REQUIRED [] NOT REQUIRED	.....
	HAND WHEEL (SIDE MOUNTED)	[■] REQUIRED	.....
	LOCAL POSITION INDICATOR	[■] REQUIRED	.....
	ELECTRO PNEUMATIC POSITIONER	[] REQUIRED [■] NOT REQUIRED	.....

Tag No.: DRV-17 / LCH35AA101 & DRV-23 / LCH45AA101
P&ID No.: PE-DG-410-100-N104

Qty.: 2 nos. (One against each Tag No.)
Data Sheet No. PES-145-06-DS1-0

DATA SHEET – A & B

DATA SHEET – A FOR CONTROL VALVE (WITH PNEUMATIC ACTUATOR) (TO BE FILLED BY PURCHASER)			DATA SHEET – B (TO BE FILLED UP BY BIDDER)
PERFORMANCE OF VALVE	LINEARITY	± 1%	.....
	HYSTERISIS	± 0.5%	.....
	SENSITIVITY	± 0.5%	.....
	ACCURACY (OVERALL)	± 1%	.....

SERVICE CONDITION

SL. No. +	LOAD	FLOW (T/HR)	INLET PR. KG/CM2(A)	OUTLET PR. KG/CM2(A)	TEMP DEG (C)	CALC ULATED CV	% VLV LIFT	VLV O/L VELOCITY
1.	40% MCR	50.369	23.61	0.3	Saturated			
2.	60% MCR	89.477	35.48	0.3	Saturated			
3.	100% MCR	195.092	58.79	0.3	Saturated			
4.	VWO	215.625	62.9	0.3	Saturated			
5.	BMCR	222.813	62.24	0.5	Saturated			

VALVE TYPE	[] CAVITATION [■] FLASHING [■] HIGH DP
MAX SHUT OFF PRESS (KG/CM2g) 70 BODY DESIGN : PRESS (KG/CM2g) | TEMP (DEG C) 70/VACUUM | **280** IBR FORM III-C [] REQUIRED [■] NOT REQUIRED	....|..... .....
TOTAL WEIGHT (VALVE + ACTUATOR + ACCESSORIES) Kg	.....

Tag No. : DRV-27 / LCH10AA101 & DRV-34 / LCH20AA101 Qty.: 2 nos. (One against each Tag No.)
P&ID No.: PE-DG-410-100-N104 Data Sheet No. PES-145-06-DS1-0

DATA SHEET – A & B

DATA SHEET – A FOR CONTROL VALVE (WITH PNEUMATIC ACTUATOR) (TO BE FILLED BY PURCHASER)			DATA SHEET – B (TO BE FILLED UP BY BIDDER)
GENERAL	PROJECT	APPDCL - 1 X 800 MW KRISHNAPATTANAM TPS	.....
	SERVICE	HPH-6A/6B NORMAL DRAIN TO DEAERATOR	.....
	LOCATION	[■] INDOOR [] OUTDOOR	.....
	DUTY	[] ON/OFF [■] MODULATING	.....
	PIPE SIZE (inlet / outlet)	273 x 6.35 | 273 x 6.35	.....
	PIPE MATERIAL (inlet / outlet)	SA 106 GR B | SA 106 GR B	.....|.....
BODY	MODEL NO.	BIDDER TO INDICATE	.....
	TYPE OF BODY: GUIDING : NO. OF PORTS	[■] GLOBE [] ANGLE | [] TOP [■] CAGE | ONE	.....|.....|.....|.....
	BODY SIZE: PORT SIZE: DESIGN CV	BIDDER TO INDICATE	.....|.....|.....
	END CONNECTION & RATING (ANSI)	[■] BWE [] SWE [] FLANGED	.....
	BODY MATERIAL	[] A216 WCB [■] A217 WC6 [] SS [] A217 CS	.....
		[] A351 CF8M	.....
	PACKING: MATERIAL SINGLE / DOUBLE	[] PTFE [■] GRAFOIL [] DOUBLE [■] SINGLE	.....|.....
	BONNET TYPE	[■] STD [] EXTENDED [] FINNED	.....
	TRIM FORM	[■] LINEAR [] EQ. PERCENTAGE	.....
		[] QUICK OPEN (ON/OFF)	
	TRIM MATERIAL: SEAT | PLUG	17-4 PH SS | 17-4 PH SS	.....|.....
	: CAGE | GUIDE BUSH	17-4 PH SS | 17-4 PH SS	.....|.....
	FLOW	BIDDER TO INDICATE (BELOW/ABOVE SEAT)	.....
	OUTLET VELOCITY	[■] < 7 M/SEC (WATER) | [] MAC NO. < 1/3(STM)	.....
	REQUIRED LEAKAGE CLASS	[] II [] III [] IV [■] V [] VI	.....
	NOISE LEVEL (dBA) (spec. 3.1.14)	LESS THAN 85 dBA	.....
	VACUUM SERVICE	[] YES [■] NO	.....
	ANTI CAVITATION TRIM	[] YES [■] NO	.....
PNEUMATIC ACTUATOR	MODEL NO. & SIZE	BIDDER TO INDICATE	.....|.....
	CLOSE AT : OPEN AT (KG/CM2g)	TO SUIT ACTUATOR (AIR TO OPEN)	.....|.....
	TRAVEL TIME FOR	<10 sec	.....
	OPEN TO CLOSE, CLOSE TO OPEN		.....
	VLV POSN. ON ELEC SIGNAL FAILURE	[] TO OPEN [] STAYPUT [■] TO CLOSE	.....
	VALVE POSN. ON SUPPLY AIR FAILURE	[■] STAYPUT	.....
ACCESSORIES	SMART POSITIONER	[■] REQUIRED [] NOT REQUIRED	.....
	AIR FILTER REGULATOR	[■] REQUIRED [] NOT REQUIRED	.....
	AIR LOCK RELAY	[■] REQUIRED [] NOT REQUIRED	.....
	POSITION LIMIT SWITCH	[■] REQUIRED [] NOT REQUIRED	.....
	POSITION TRANSMITTER	PART OF SMART POSITIONER	.....
	SOLENOID VALVE	[■] REQUIRED [] NOT REQUIRED	.....
	E/P CONVERTER	PART OF SMART POSITIONER	.....
	JUNCTION BOX	[■] REQUIRED [] NOT REQUIRED	.....
	HAND WHEEL (SIDE MOUNTED)	[■] REQUIRED	.....
	LOCAL POSITION INDICATOR	[■] REQUIRED	.....
	ELECTRO PNEUMATIC POSITIONER	[] REQUIRED [■] NOT REQUIRED	.....

Tag No. : DRV-27 / LCH10AA101 & DRV-34 / LCH20AA101
P&ID No.: PE-DG-410-100-N104

Qty.: 2 nos. (One against each Tag No.)
Data Sheet No. PES-145-06-DS1-0

DATA SHEET – A & B

DATA SHEET – A FOR CONTROL VALVE (WITH PNEUMATIC ACTUATOR) (TO BE FILLED BY PURCHASER)			DATA SHEET – B (TO BE FILLED UP BY BIDDER)
PERFORMANCE OF VALVE	LINEARITY	± 1%	.....
	HYSTERISIS	± 0.5%	.....
	SENSITIVITY	± 0.5%	.....
	ACCURACY (OVERALL)	± 1%	.....

	SL. No. +	LOAD	FLOW (T/HR)	INLET PR. KG/CM2(A)	OUTLET PR. KG/CM2(A)	TEMP DEG (C)	CALC ULATED CV	% VLV LIFT	VLV O/L VELOCITY
SERVICE CONDITION	1.	40% MCR	64.695	9.71	6.64	159.3			
	2.	60% MCR	115.026	14.33	8.70	173.7			
	3.	100% MCR	244.006	23.4	12.7	196.3			
	4.	VWO	268.961	25.01	13.39	199.5			
	5.	BMCR	278.244	24.58	13.01	198.3			

	VALVE TYPE	[] CAVITATION [■] FLASHING [] HIGH DP
	MAX SHUT OFF PRESS (KG/CM2g) 28 BODY DESIGN : PRESS (KG/CM2g) | TEMP (DEG C) 28 | 210 IBR FORM III-C [] REQUIRED [■] NOT REQUIRED	....|..... .....
	TOTAL WEIGHT (VALVE + ACTUATOR + ACCESSORIES) Kg	.....

Tag No. : DRV-30 / LCH15AA101 & DRV-37 / LCH25AA101
P&ID No.: PE-DG-410-100-N104

Qty.: 2 nos. (One against each Tag No.)
Data Sheet No. PES-145-06-DS1-0

DATA SHEET – A & B

DATA SHEET – A FOR CONTROL VALVE (WITH PNEUMATIC ACTUATOR) (TO BE FILLED BY PURCHASER)			DATA SHEET – B (TO BE FILLED UP BY BIDDER)
GENERAL	PROJECT	APPDCL - 1 X 800 MW KRISHNAPATTANAM TPS	.....
	SERVICE	HPH-6A/6B ALT. DRAIN TO F/T-A	.....
	LOCATION	[■] INDOOR [] OUTDOOR	.....
	DUTY	[] ON/OFF [■] MODULATING	.....
	PIPE SIZE (inlet / outlet)	273 x 6.35 | 323.9 x 9.53	.....
	PIPE MATERIAL (inlet / outlet)	SA 106 GR B | SA 106 GR B	.....|.....
BODY	MODEL NO.	BIDDER TO INDICATE	.....
	TYPE OF BODY: GUIDING : NO. OF PORTS	[■] GLOBE [] ANGLE | [] TOP [■] CAGE | ONE	.....|.....|.....|.....
	BODY SIZE: PORT SIZE: DESIGN CV	BIDDER TO INDICATE	.....|.....|.....
	END CONNECTION & RATING (ANSI)	[■] BWE [] SWE [] FLANGED : ANSI 600#	.....
	BODY MATERIAL	[] A216 WCB [■] A217 WC9 [] SS [] A217 CS	.....
		[] A351 CF8M	.....
	PACKING: MATERIAL SINGLE / DOUBLE	[] PTFE [■] GRAFOIL [■] DOUBLE [] SINGLE	.....|.....
	BONNET TYPE	[■] STD [] EXTENDED [] FINNED	.....
	TRIM FORM	[■] LINEAR [] EQ. PERCENTAGE	.....
		[] QUICK OPEN (ON/OFF)	
	TRIM MATERIAL: SEAT | PLUG	440C | 440C	.....|.....
	: CAGE | GUIDE BUSH	440C | 440C	.....|.....
	FLOW	BIDDER TO INDICATE (BELOW/ABOVE SEAT)	.....
	OUTLET VELOCITY	[■] < 7 M/SEC (WATER) | [] MAC NO. < 1/3(STM)	.....
	REQUIRED LEAKAGE CLASS	[] II [] III [] IV [■] V [] VI	.....
	NOISE LEVEL (dBA) (spec. 3.1.14)	LESS THAN 85 dBA	.....
	VACUUM SERVICE	[■] YES [] NO	.....
	ANTI CAVITATION TRIM	[] YES [■] NO	.....
PNEUMATIC ACTUATOR	MODEL NO. & SIZE	BIDDER TO INDICATE	.....|.....
	CLOSE AT : OPEN AT (KG/CM2g)	TO SUIT ACTUATOR (AIR TO CLOSE)	.....|.....
	TRAVEL TIME FOR	<10 sec	.....
	OPEN TO CLOSE, CLOSE TO OPEN		.....
	VLV POSN. ON ELEC SIGNAL FAILURE	[■] TO OPEN [] STAYPUT [] TO CLOSE	.....
	VALVE POSN. ON SUPPLY AIR FAILURE	[■] TO OPEN	.....
ACCESSORIES	SMART POSITIONER	[■] REQUIRED [] NOT REQUIRED	.....
	AIR FILTER REGULATOR	[■] REQUIRED [] NOT REQUIRED	.....
	AIR LOCK RELAY	[■] REQUIRED [] NOT REQUIRED	.....
	POSITION LIMIT SWITCH	[■] REQUIRED [] NOT REQUIRED	.....
	POSITION TRANSMITTER	PART OF SMART POSITIONER	.....
	SOLENOID VALVE	[■] REQUIRED [] NOT REQUIRED	.....
	E/P CONVERTER	PART OF SMART POSITIONER	.....
	JUNCTION BOX	[■] REQUIRED [] NOT REQUIRED	.....
	HAND WHEEL (SIDE MOUNTED)	[■] REQUIRED	.....
	LOCAL POSITION INDICATOR	[■] REQUIRED	.....
	ELECTRO PNEUMATIC POSITIONER	[] REQUIRED [■] NOT REQUIRED	.....

Tag No. : DRV-30 / LCH15AA101 & DRV-37 / LCH25AA101
P&ID No.: PE-DG-410-100-N104

Qty.: 2 nos. (One against each Tag No.)
Data Sheet No. PES-145-06-DS1-0

DATA SHEET – A & B

DATA SHEET – A FOR CONTROL VALVE (WITH PNEUMATIC ACTUATOR) (TO BE FILLED BY PURCHASER)			DATA SHEET – B (TO BE FILLED UP BY BIDDER)
PERFORMANCE OF VALVE	LINEARITY	± 1%	.....
	HYSTERISIS	± 0.5%	.....
	SENSITIVITY	± 0.5%	.....
	ACCURACY (OVERALL)	± 1%	.....

	SL. No. +	LOAD	FLOW (T/HR)	INLET PR. KG/CM2(A)	OUTLET PR. KG/CM2(A)	TEMP DEG (C)	CALC ULATED CV	% VLV LIFT	VLV O/L VELOCITY
SERVICE CONDITION	1.	40% MCR	64.695	9.71	0.3	Saturated			
	2.	60% MCR	115.026	14.33	0.3	Saturated			
	3.	100% MCR	244.006	23.4	0.3	Saturated			
	4.	VWO	268.961	25.01	0.3	Saturated			
	5.	BMCR	278.244	24.58	0.5	Saturated			

	VALVE TYPE	[] CAVITATION [■] FLASHING [■] HIGH DP
	MAX SHUT OFF PRESS (KG/CM2g) 28 BODY DESIGN : PRESS (KG/CM2g) | TEMP (DEG C) 28/ VACUUM | **230** IBR FORM III-C [] REQUIRED [■] NOT REQUIRED	....|..... .....
	TOTAL WEIGHT (VALVE + ACTUATOR + ACCESSORIES) Kg	.....

Tag No.: DRV-58 / LCJ31AA101 Qty.: 1 no. Data Sheet No. PES-145-06-DS1-0
P&ID No.: PE-DG-410-100-N104

DATA SHEET – A & B

DATA SHEET – A FOR CONTROL VALVE (WITH PNEUMATIC ACTUATOR) (TO BE FILLED BY PURCHASER)			DATA SHEET – B (TO BE FILLED UP BY BIDDER)
GENERAL	PROJECT	APPDCL - 1 X 800 MW KRISHNAPATTANAM TPS	.....
	SERVICE	LPH-3 ALT. DRAIN TO F/T-B	.....
	LOCATION	[■] INDOOR [] OUTDOOR	.....
	DUTY	[] ON/OFF [■] MODULATING	.....
	PIPE SIZE (inlet / outlet)	273 x 6.35 | 323.9 x 9.53	.....
	PIPE MATERIAL (inlet / outlet)	SA 106 GR B | SA 106 GR B	.....|.....
BODY	MODEL NO.	BIDDER TO INDICATE	.....
	TYPE OF BODY: GUIDING : NO. OF PORTS	[■] GLOBE [] ANGLE | [] TOP [■] CAGE | ONE	.....|.....|.....|.....
	BODY SIZE: PORT SIZE: DESIGN CV	BIDDER TO INDICATE	.....|.....|.....
	END CONNECTION & RATING (ANSI)	[■] BWE [] SWE [] FLANGED	.....
	BODY MATERIAL	[] A216 WCB [■] A217 WC9 [] SS [] A217 CS	.....
		[] A351 CF8M	.....
	PACKING: MATERIAL SINGLE / DOUBLE	[] PTFE [■] GRAFOIL [■] DOUBLE [] SINGLE	.....|.....
	BONNET TYPE	[■] STD [] EXTENDED [] FINNED	.....
	TRIM FORM	[■] LINEAR [] EQ. PERCENTAGE	.....
		[] QUICK OPEN (ON/OFF)	
	TRIM MATERIAL: SEAT | PLUG	17-4 PH SS | 17-4 PH SS	.....|.....
	: CAGE | GUIDE BUSH	17-4 PH SS | 17-4 PH SS	.....|.....
	FLOW	BIDDER TO INDICATE (BELOW/ABOVE SEAT)	.....
	OUTLET VELOCITY	[■] < 7 M/SEC (WATER) | [] MAC NO. < 1/3(STM)	.....
	REQUIRED LEAKAGE CLASS	[] II [] III [] IV [■] V [] VI	.....
	NOISE LEVEL (dBA) (spec. 3.1.14)	LESS THAN 85 dBA	.....
	VACUUM SERVICE	[■] YES [] NO	.....
	ANTI CAVITATION TRIM	[] YES [■] NO	.....
PNEUMATIC ACTUATOR	MODEL NO. & SIZE	BIDDER TO INDICATE	.....|.....
	CLOSE AT : OPEN AT (KG/CM2g)	TO SUIT ACTUATOR (AIR TO CLOSE)	.....|.....
	TRAVEL TIME FOR	<10 sec	.....
	OPEN TO CLOSE, CLOSE TO OPEN		.....
	VLV POSN. ON ELEC SIGNAL FAILURE	[■] TO OPEN [] STAYPUT [] TO CLOSE	.....
	VALVE POSN. ON SUPPLY AIR FAILURE	[■] TO OPEN	.....
ACCESSORIES	SMART POSITIONER	[■] REQUIRED [] NOT REQUIRED	.....
	AIR FILTER REGULATOR	[■] REQUIRED [] NOT REQUIRED	.....
	AIR LOCK RELAY	[■] REQUIRED [] NOT REQUIRED	.....
	POSITION LIMIT SWITCH	[■] REQUIRED [] NOT REQUIRED	.....
	POSITION TRANSMITTER	PART OF SMART POSITIONER	.....
	SOLENOID VALVE	[■] REQUIRED [] NOT REQUIRED	.....
	E/P CONVERTER	PART OF SMART POSITIONER	.....
	JUNCTION BOX	[■] REQUIRED [] NOT REQUIRED	.....
	HAND WHEEL (SIDE MOUNTED)	[■] REQUIRED	.....
	LOCAL POSITION INDICATOR	[■] REQUIRED	.....
	ELECTRO PNEUMATIC POSITIONER	[] REQUIRED [■] NOT REQUIRED	.....

Tag No.: DRV-58 / LCJ31AA101 Qty.: 1 no. Data Sheet No. PES-145-06-DS1-0
P&ID No.: PE-DG-410-100-N104

DATA SHEET – A & B

DATA SHEET – A FOR CONTROL VALVE (WITH PNEUMATIC ACTUATOR) (TO BE FILLED BY PURCHASER)			DATA SHEET – B (TO BE FILLED UP BY BIDDER)
PERFORMANCE OF VALVE	LINEARITY	± 1%	.....
	HYSTERISIS	± 0.5%	.....
	SENSITIVITY	± 0.5%	.....
	ACCURACY (OVERALL)	± 1%	.....

SERVICE CONDITION

SL. No. +	LOAD	FLOW (T/HR)	INLET PR. KG/CM2(A)	OUTLET PR. KG/CM2(A)	TEMP DEG (C)	CALC ULATED CV	% VLV LIFT	VLV O/L VELOCITY
1.	40% MCR	67.793	1.24	0.3	Saturated			
2.	60% MCR	107.53	1.73	0.3	Saturated			
3.	100% MCR	199.782	2.68	0.3	Saturated			
4.	VWO	217.144	2.85	0.3	Saturated			
5.	LPH-1/2 & DC-1/2 OUT	280	2.4	0.5	Saturated			

VALVE TYPE	[] CAVITATION [■] FLASHING [■] HIGH DP
MAX SHUT OFF PRESS (KG/CM2g) 7 BODY DESIGN : PRESS (KG/CM2g) | TEMP (DEG C) 7/VACUUM | 140 IBR FORM III-C [] REQUIRED [■] NOT REQUIRED	....|..... .....
TOTAL WEIGHT (VALVE + ACTUATOR + ACCESSORIES) Kg	.....

Tag No.: DRV-73 / LAA01AA101 Qty.: 1 no. Data Sheet No. PES-145-06-DS1-0
P&ID No.: PE-DG-410-100-N106

DATA SHEET – A & B

DATA SHEET – A FOR CONTROL VALVE (WITH PNEUMATIC ACTUATOR) (TO BE FILLED BY PURCHASER)			DATA SHEET – B (TO BE FILLED UP BY BIDDER)
GENERAL	PROJECT	APPDCL - 1 X 800 MW KRISHNAPATTANAM TPS	.....
	SERVICE	DEAERATOR OVERFLOW TO F/T-B	.....
	LOCATION	[■] INDOOR [] OUTDOOR	.....
	DUTY	[■] ON/OFF [] MODULATING	.....
	PIPE SIZE (inlet / outlet)	219.1 x 6.35 | 323.9 x 9.53	.....
	PIPE MATERIAL (inlet / outlet)	SA 106 GR B | SA 106 GR B	.....|.....
BODY	MODEL NO.	BIDDER TO INDICATE	.....
	TYPE OF BODY: GUIDING : NO. OF PORTS	[■] GLOBE [] ANGLE | [] TOP [■] CAGE | ONE	.....|.....|.....|.....
	BODY SIZE: PORT SIZE: DESIGN CV	BIDDER TO INDICATE	.....|.....|.....
	END CONNECTION & RATING (ANSI)	[■] BWE [] SWE [] FLANGED	.....
	BODY MATERIAL	[] A216 WCB [■] A217 WC9 [] SS [] A217 CS	.....
		[] A351 CF8M	.....
	PACKING: MATERIAL SINGLE / DOUBLE	[] PTFE [■] GRAFOIL [■] DOUBLE [] SINGLE	.....|.....
	BONNET TYPE	[■] STD [] EXTENDED [] FINNED	.....
	TRIM FORM	[] LINEAR [] EQ. PERCENTAGE	.....
		[■] QUICK OPEN (ON/OFF)	
	TRIM MATERIAL: SEAT | PLUG	17-4 PH SS | 17-4 PH SS	.....|.....
	: CAGE | GUIDE BUSH	17-4 PH SS | 17-4 PH SS	.....|.....
	FLOW	BIDDER TO INDICATE (BELOW/ABOVE SEAT)	.....
	OUTLET VELOCITY	[■] < 7 M/SEC (WATER) | [] MAC NO. < 1/3(STM)	.....
	REQUIRED LEAKAGE CLASS	[] II [] III [] IV [■] V [] VI	.....
	NOISE LEVEL (dBA) (spec. 3.1.14)	LESS THAN 85 dBA	.....
	VACUUM SERVICE	[■] YES [] NO	.....
	ANTI CAVITATION TRIM	[] YES [■] NO	.....
PNEUMATIC ACTUATOR	MODEL NO. & SIZE	BIDDER TO INDICATE	.....|.....
	CLOSE AT : OPEN AT (KG/CM2g)	TO SUIT ACTUATOR (AIR TO CLOSE)	.....|.....
	TRAVEL TIME FOR	<10 sec	.....
	OPEN TO CLOSE, CLOSE TO OPEN		.....
	VLV POSN. ON ELEC SIGNAL FAILURE	[■] TO OPEN [] STAYPUT [] TO CLOSE	.....
	VALVE POSN. ON SUPPLY AIR FAILURE	[■] STAYPUT	.....
ACCESSORIES	SMART POSITIONER	[] REQUIRED [■] NOT REQUIRED	.....
	AIR FILTER REGULATOR	[■] REQUIRED [] NOT REQUIRED	.....
	AIR LOCK RELAY	[■] REQUIRED [] NOT REQUIRED	.....
	POSITION LIMIT SWITCH	[■] REQUIRED [] NOT REQUIRED	.....
	POSITION TRANSMITTER	[] REQUIRED [■] NOT REQUIRED	.....
	SOLENOID VALVE	[■] REQUIRED [] NOT REQUIRED	.....
	E/P CONVERTER	[] REQUIRED [■] NOT REQUIRED	.....
	JUNCTION BOX	[■] REQUIRED [] NOT REQUIRED	.....
	HAND WHEEL (SIDE MOUNTED)	[■] REQUIRED	.....
	LOCAL POSITION INDICATOR	[■] REQUIRED	.....
	ELECTRO PNEUMATIC POSITIONER	[] REQUIRED [■] NOT REQUIRED	.....

Tag No.: DRV-73 / LAA01AA101 Qty.: 1 no. Data Sheet No. PES-145-06-DS1-0
P&ID No.: PE-DG-410-100-N106

DATA SHEET – A & B

DATA SHEET – A FOR CONTROL VALVE (WITH PNEUMATIC ACTUATOR) (TO BE FILLED BY PURCHASER)			DATA SHEET – B (TO BE FILLED UP BY BIDDER)
PERFORMANCE OF VALVE	LINEARITY HYSTERISIS SENSITIVITY ACCURACY (OVERALL)	NOT APPLICABLE #	....

SERVICE CONDITION	SL. No. +	LOAD	FLOW (T/HR)	INLET PR. KG/CM2(A)	OUTLET PR. KG/CM2(A)	TEMP DEG (C)	CALC ULATED CV	% VLV LIFT	VLV O/L VELOCITY
	1.	MAX 10% BMCR	260	12.01	0.3	189.2			
	VALVE TYPE						[] CAVITATION [■] FLASHING [] HIGH DP		
	MAX SHUT OFF PRESS (KG/CM2g) 15 BODY DESIGN : PRESS (KG/CM2g) | TEMP (DEG C) 15/ VACUUM | 200 IBR FORM III-C [] REQUIRED [■] NOT REQUIRED						....|.....		

TOTAL WEIGHT (VALVE + ACTUATOR + ACCESSORIES) Kg	.....

NOTES:

1. # THESE PERFORMANCE PARAMETERS ARE NOT APPLICABLE FOR ON/OFF VALVES (OPERATED THROUGH SOLENOID).

Tag No.: DRV-2 / LCH50AA101 & DRV-8 / LCH60AA101
P&ID No.: PE-DG-410-100-N104

Qty.: 2 nos. (One against each Tag No.)
Data Sheet No. PES-145-06-DS1-0

DATA SHEET – A & B

DATA SHEET – A FOR CONTROL VALVE (WITH PNEUMATIC ACTUATOR) (TO BE FILLED BY PURCHASER)			DATA SHEET – B (TO BE FILLED UP BY BIDDER)
GENERAL	PROJECT	APPDCL - 1 X 800 MW KRISHNAPATTANAM TPS	.....
	SERVICE	HPH-8A/8B NORMAL DRAIN TO HPH-7A/7B	.....
	LOCATION	[■] INDOOR [] OUTDOOR	.....
	DUTY	[] ON/OFF [■] MODULATING	.....
	PIPE SIZE (inlet / outlet)	168.3 x 10.97 | 168.3 x 10.97	.....
	PIPE MATERIAL (inlet / outlet)	SA 106 GR B | SA 106 GR B	.....|.....
BODY	MODEL NO.	BIDDER TO INDICATE	.....
	TYPE OF BODY: GUIDING : NO. OF PORTS	[■] GLOBE [] ANGLE | [] TOP [■] CAGE | ONE	.....|.....|.....|.....
	BODY SIZE: PORT SIZE: DESIGN CV	BIDDER TO INDICATE	.....|.....|.....
	END CONNECTION & RATING (ANSI)	[■] BWE [] SWE [] FLANGED	.....
	BODY MATERIAL	[] A216 WCB [■] A217 WC6 [] SS [] A217 CS	.....
		[] A351 CF8M	.....
	PACKING: MATERIAL SINGLE / DOUBLE	[] PTFE [■] GRAFOIL [] DOUBLE [■] SINGLE	.....|.....
	BONNET TYPE	[] STD [■] EXTENDED [] FINNED	.....
	TRIM FORM	[■] LINEAR [] EQ. PERCENTAGE	.....
		[] QUICK OPEN (ON/OFF)	
	TRIM MATERIAL: SEAT | PLUG	17-4 PH SS | 17-4 PH SS	.....|.....
	: CAGE | GUIDE BUSH	17-4 PH SS | 17-4 PH SS	.....|.....
	FLOW	BIDDER TO INDICATE (BELOW/ABOVE SEAT)	.....
	OUTLET VELOCITY	[■] < 7 M/SEC (WATER) | [] MAC NO. < 1/3(STM)	.....
	REQUIRED LEAKAGE CLASS	[] II [] III [] IV [■] V [] VI	.....
	NOISE LEVEL (dBA) (spec. 3.1.14)	LESS THAN 85 dBA	.....
	VACUUM SERVICE	[] YES [■] NO	.....
	ANTI CAVITATION TRIM	[] YES [■] NO	.....
PNEUMATIC ACTUATOR	MODEL NO. & SIZE	BIDDER TO INDICATE	.....|.....
	CLOSE AT : OPEN AT (KG/CM2g)	TO SUIT ACTUATOR (AIR TO OPEN)	.....|.....
	TRAVEL TIME FOR	<10 sec	.....
	OPEN TO CLOSE, CLOSE TO OPEN		.....
	VLV POSN. ON ELEC SIGNAL FAILURE	[] TO OPEN [] STAYPUT [■] TO CLOSE	.....
	VALVE POSN. ON SUPPLY AIR FAILURE	[■] TO CLOSE	.....
ACCESSORIES	SMART POSITIONER	[■] REQUIRED [] NOT REQUIRED	.....
	AIR FILTER REGULATOR	[■] REQUIRED [] NOT REQUIRED	.....
	AIR LOCK RELAY	[■] REQUIRED [] NOT REQUIRED	.....
	POSITION LIMIT SWITCH	[■] REQUIRED [] NOT REQUIRED	.....
	POSITION TRANSMITTER	PART OF SMART POSITIONER	.....
	SOLENOID VALVE	[■] REQUIRED [] NOT REQUIRED	.....
	E/P CONVERTER	PART OF SMART POSITIONER	.....
	JUNCTION BOX	[■] REQUIRED [] NOT REQUIRED	.....
	HAND WHEEL (SIDE MOUNTED)	[■] REQUIRED	.....
	LOCAL POSITION INDICATOR	[■] REQUIRED	.....
	ELECTRO PNEUMATIC POSITIONER	[] REQUIRED [■] NOT REQUIRED	.....

Tag No.: DRV-2 / LCH50AA101 & DRV-8 / LCH60AA101
P&ID No.: PE-DG-410-100-N104

Qty.: 2 nos. (One against each Tag No.)
Data Sheet No. PES-145-06-DS1-0

DATA SHEET – A & B

DATA SHEET – A FOR CONTROL VALVE (WITH PNEUMATIC ACTUATOR) (TO BE FILLED BY PURCHASER)			DATA SHEET – B (TO BE FILLED UP BY BIDDER)
PERFORMANCE OF VALVE	LINEARITY	± 1%	.....
	HYSTERISIS	± 0.5%	.....
	SENSITIVITY	± 0.5%	.....
	ACCURACY (OVERALL)	± 1%	.....

	SL. No. +	LOAD	FLOW (T/HR)	INLET PR. KG/CM2(A)	OUTLET PR. KG/CM2(A)	TEMP DEG (C)	CALC ULATED CV	% VLV LIFT	VLV O/L VELOCITY
SERVICE CONDITION	1.	40% MCR	12.874	32.12	23.61	225.3			
	2.	60% MCR	23.873	47.79	35.48	247.5			
	3.	100% MCR	56.874	78.5	58.79	278.3			
	4.	VWO	63.675	84.38	62.90	283.2			
	5.	BMCR	65.902	83.63	62.24	282.5			

	VALVE TYPE	[] CAVITATION [■] FLASHING [] HIGH DP
	MAX SHUT OFF PRESS (KG/CM2g) 88 BODY DESIGN : PRESS (KG/CM2g) | TEMP (DEG C) 88 | **290** IBR FORM III-C [] REQUIRED [■] NOT REQUIRED	....|..... .....
TOTAL WEIGHT (VALVE + ACTUATOR + ACCESSORIES) Kg		.....

Tag No. : DRV-5 / LCH55AA101 & DRV-11 / LCH65AA101 Qty.: 2 nos. (One against each Tag No.)
P&ID No.: PE-DG-410-100-N104 Data Sheet No. PES-145-06-DS1-0

DATA SHEET – A & B

DATA SHEET – A FOR CONTROL VALVE (WITH PNEUMATIC ACTUATOR) (TO BE FILLED BY PURCHASER)			DATA SHEET – B (TO BE FILLED UP BY BIDDER)
GENERAL	PROJECT	APPDCL - 1 X 800 MW KRISHNAPATTANAM TPS	.....
	SERVICE	HPH-8A/8B ALT. DRAIN TO F/T-A	.....
	LOCATION	[■] INDOOR [] OUTDOOR	.....
	DUTY	[] ON/OFF [■] MODULATING	.....
	PIPE SIZE (inlet / outlet)	168.3 x 10.97 | 219.1 x 12.7	.....
	PIPE MATERIAL (inlet / outlet)	SA 106 GR B | SA 106 GR B	.....|.....
BODY	MODEL NO.	BIDDER TO INDICATE	.....
	TYPE OF BODY: GUIDING : NO. OF PORTS	[■] GLOBE [] ANGLE | [] TOP [■] CAGE | ONE	.....|.....|.....|.....
	BODY SIZE: PORT SIZE: DESIGN CV	BIDDER TO INDICATE	.....|.....|.....
	END CONNECTION & RATING (ANSI)	[■] BWE [] SWE [] FLANGED	.....
	BODY MATERIAL	[] A216 WCB [■] A217 WC9 [] SS [] A217 CS	.....
		[] A351 CF8M	.....
	PACKING: MATERIAL SINGLE / DOUBLE	[] PTFE [■] GRAFOIL [■] DOUBLE [] SINGLE	.....|.....
	BONNET TYPE	[] STD [■] EXTENDED [] FINNED	.....
	TRIM FORM	[■] LINEAR [] EQ. PERCENTAGE	.....
		[] QUICK OPEN (ON/OFF)	
	TRIM MATERIAL: SEAT | PLUG	440C | 440C	.....|.....
	: CAGE | GUIDE BUSH	440C | 440C	.....|.....
	FLOW	BIDDER TO INDICATE (BELOW/ABOVE SEAT)	.....
	OUTLET VELOCITY	[■] < 7 M/SEC (WATER) | [] MAC NO. < 1/3(STM)	.....
	REQUIRED LEAKAGE CLASS	[] II [] III [] IV [■] V [] VI	.....
	NOISE LEVEL (dBA) (spec. 3.1.14)	LESS THAN 85 dBA	.....
	VACUUM SERVICE	[■] YES [] NO	.....
	ANTI CAVITATION TRIM	[] YES [■] NO	.....
PNEUMATIC ACTUATOR	MODEL NO. & SIZE	BIDDER TO INDICATE	.....|.....
	CLOSE AT : OPEN AT (KG/CM2g)	TO SUIT ACTUATOR (AIR TO CLOSE)	.....|.....
	TRAVEL TIME FOR	<10 sec	.....
	OPEN TO CLOSE, CLOSE TO OPEN		.....
	VLV POSN. ON ELEC SIGNAL FAILURE	[■] TO OPEN [] STAYPUT [] TO CLOSE	.....
	VALVE POSN. ON SUPPLY AIR FAILURE	[■] TO OPEN	.....
ACCESSORIES	SMART POSITIONER	[■] REQUIRED [] NOT REQUIRED	.....
	AIR FILTER REGULATOR	[■] REQUIRED [] NOT REQUIRED	.....
	AIR LOCK RELAY	[■] REQUIRED [] NOT REQUIRED	.....
	POSITION LIMIT SWITCH	[■] REQUIRED [] NOT REQUIRED	.....
	POSITION TRANSMITTER	PART OF SMART POSITIONER	.....
	SOLENOID VALVE	[■] REQUIRED [] NOT REQUIRED	.....
	E/P CONVERTER	PART OF SMART POSITIONER	.....
	JUNCTION BOX	[■] REQUIRED [] NOT REQUIRED	.....
	HAND WHEEL (SIDE MOUNTED)	[■] REQUIRED	.....
	LOCAL POSITION INDICATOR	[■] REQUIRED	.....
	ELECTRO PNEUMATIC POSITIONER	[] REQUIRED [■] NOT REQUIRED	.....

Tag No. : DRV-5 / LCH55AA101 & DRV-11 / LCH65AA101
P&ID No.: PE-DG-410-100-N104

Qty.: 2 nos. (One against each Tag No.)
Data Sheet No. PES-145-06-DS1-0

DATA SHEET – A & B

DATA SHEET – A FOR CONTROL VALVE (WITH PNEUMATIC ACTUATOR) (TO BE FILLED BY PURCHASER)			DATA SHEET – B (TO BE FILLED UP BY BIDDER)
PERFORMANCE OF VALVE	LINEARITY	± 1%	.....
	HYSTERISIS	± 0.5%	.....
	SENSITIVITY	± 0.5%	.....
	ACCURACY (OVERALL)	± 1%	.....

SERVICE CONDITION

SL. No. +	LOAD	FLOW (T/HR)	INLET PR. KG/CM2(A)	OUTLET PR. KG/CM2(A)	TEMP DEG (C)	CALC ULATED CV	% VLV LIFT	VLV O/L VELOCITY
1.	40% MCR	12.874	32.12	0.3	Saturated			
2.	60% MCR	23.873	47.79	0.3	Saturated			
3.	100% MCR	56.874	78.5	0.3	Saturated			
4.	VWO	63.675	84.38	0.3	Saturated			
5.	BMCR	65.902	83.63	0.5	Saturated			

VALVE TYPE	[] CAVITATION [■] FLASHING [■] HIGH DP
MAX SHUT OFF PRESS (KG/CM2g) 88 BODY DESIGN : PRESS (KG/CM2g) | TEMP (DEG C) 88/VACUUM | **300** IBR FORM III-C [] REQUIRED [■] NOT REQUIRED	....|..... .....
TOTAL WEIGHT (VALVE + ACTUATOR + ACCESSORIES) Kg	.....

Tag No.: DRV-40 / LCJ40AA101 Qty.: 1 no. Data Sheet No. PES-145-06-DS1-0
P&ID No.: PE-DG-410-100-N104

DATA SHEET – A & B

DATA SHEET – A FOR CONTROL VALVE (WITH PNEUMATIC ACTUATOR) (TO BE FILLED BY PURCHASER)			DATA SHEET – B (TO BE FILLED UP BY BIDDER)
GENERAL	PROJECT	APPDCL - 1 X 800 MW KRISHNAPATTANAM TPS	.....
	SERVICE	LPH-4 NORMAL DRAIN TO LPH-3	.....
	LOCATION	[■] INDOOR [] OUTDOOR	.....
	DUTY	[] ON/OFF [■] MODULATING	.....
	PIPE SIZE (inlet / outlet)	168.3 x 7.11 | 219.1 x 6.35	.....
	PIPE MATERIAL (inlet / outlet)	SA 106 GR B | SA 106 GR B	.....|.....
BODY	MODEL NO.	BIDDER TO INDICATE	.....
	TYPE OF BODY: GUIDING : NO. OF PORTS	[■] GLOBE [] ANGLE | [] TOP [■] CAGE | ONE	.....|.....|.....|.....
	BODY SIZE: PORT SIZE: DESIGN CV	BIDDER TO INDICATE	.....|.....|.....
	END CONNECTION & RATING (ANSI)	[■] BWE [] SWE [] FLANGED	.....
	BODY MATERIAL	[] A216 WCB [■] A217 WC6 [] SS [] A217 CS	.....
		[] A351 CF8M	.....
	PACKING: MATERIAL SINGLE / DOUBLE	[] PTFE [■] GRAFOIL [■] DOUBLE [] SINGLE	.....|.....
	BONNET TYPE	[■] STD [] EXTENDED [] FINNED	.....
	TRIM FORM	[■] LINEAR [] EQ. PERCENTAGE	.....
		[] QUICK OPEN (ON/OFF)	
	TRIM MATERIAL: SEAT | PLUG	17-4 PH SS | 17-4 PH SS	.....|.....
	: CAGE | GUIDE BUSH	17-4 PH SS | 17-4 PH SS	.....|.....
	FLOW	BIDDER TO INDICATE (BELOW/ABOVE SEAT)	.....
	OUTLET VELOCITY	[■] < 7 M/SEC (WATER) | [] MAC NO. < 1/3(STM)	.....
	REQUIRED LEAKAGE CLASS	[] II [] III [] IV [■] V [] VI	.....
	NOISE LEVEL (dBA) (spec. 3.1.14)	LESS THAN 85 dBA	.....
	VACUUM SERVICE	[■] YES [] NO	.....
	ANTI CAVITATION TRIM	[] YES [■] NO	.....
PNEUMATIC ACTUATOR	MODEL NO. & SIZE	BIDDER TO INDICATE	.....|.....
	CLOSE AT : OPEN AT (KG/CM2g)	TO SUIT ACTUATOR (AIR TO OPEN)	.....|.....
	TRAVEL TIME FOR	<10 sec	.....
	OPEN TO CLOSE, CLOSE TO OPEN		.....
	VLV POSN. ON ELEC SIGNAL FAILURE	[] TO OPEN [] STAYPUT [■] TO CLOSE	.....
	VALVE POSN. ON SUPPLY AIR FAILURE	[■] TO CLOSE	.....
ACCESSORIES	SMART POSITIONER	[■] REQUIRED [] NOT REQUIRED	.....
	AIR FILTER REGULATOR	[■] REQUIRED [] NOT REQUIRED	.....
	AIR LOCK RELAY	[■] REQUIRED [] NOT REQUIRED	.....
	POSITION LIMIT SWITCH	[■] REQUIRED [] NOT REQUIRED	.....
	POSITION TRANSMITTER	PART OF SMART POSITIONER	.....
	SOLENOID VALVE	[■] REQUIRED [] NOT REQUIRED	.....
	E/P CONVERTER	PART OF SMART POSITIONER	.....
	JUNCTION BOX	[■] REQUIRED [] NOT REQUIRED	.....
	HAND WHEEL (SIDE MOUNTED)	[■] REQUIRED	.....
	LOCAL POSITION INDICATOR	[■] REQUIRED	.....
	ELECTRO PNEUMATIC POSITIONER	[] REQUIRED [■] NOT REQUIRED	.....

Tag No.: DRV-40 / LCJ40AA101 Qty.: 1 no. Data Sheet No. PES-145-06-DS1-0
P&ID No.: PE-DG-410-100-N104

DATA SHEET – A & B

DATA SHEET – A FOR CONTROL VALVE (WITH PNEUMATIC ACTUATOR) (TO BE FILLED BY PURCHASER)			DATA SHEET – B (TO BE FILLED UP BY BIDDER)
PERFORMANCE OF VALVE	LINEARITY	± 1%	.....
	HYSTERISIS	± 0.5%	.....
	SENSITIVITY	± 0.5%	.....
	ACCURACY (OVERALL)	± 1%	.....

SERVICE CONDITION

SL. No. +	LOAD	FLOW (T/HR)	INLET PR. KG/CM2(A)	OUTLET PR. KG/CM2(A)	TEMP DEG (C)	CALC ULATED CV	% VLV LIFT	VLV O/L VELOCITY
1.	40% MCR	22.337	2.31	1.24	106.5			
2.	60% MCR	36.038	3.26	1.73	116.9			
3.	100% MCR	68.626	5.08	2.68	131.4			
4.	VWO	74.835	5.40	2.85	133.5			

VALVE TYPE	[] CAVITATION [■] FLASHING [] HIGH DP
MAX SHUT OFF PRESS (KG/CM2g) 7 BODY DESIGN : PRESS (KG/CM2g) | TEMP (DEG C) 7/VACUUM | 140 IBR FORM III-C [] REQUIRED [■] NOT REQUIRED	....|..... .....
TOTAL WEIGHT (VALVE + ACTUATOR + ACCESSORIES) Kg	.....

Tag No.: DRV-43 / LCJ41AA101 Qty.: 1 no. Data Sheet No. PES-145-06-DS1-0
P&ID No.: PE-DG-410-100-N104

DATA SHEET – A & B

DATA SHEET – A FOR CONTROL VALVE (WITH PNEUMATIC ACTUATOR) (TO BE FILLED BY PURCHASER)			DATA SHEET – B (TO BE FILLED UP BY BIDDER)
GENERAL	PROJECT	APPDCL - 1 X 800 MW KRISHNAPATTANAM TPS	.....
	SERVICE	LPH-4 ALT. DRAIN TO F/T-B	.....
	LOCATION	[■] INDOOR [] OUTDOOR	.....
	DUTY	[] ON/OFF [■] MODULATING	.....
	PIPE SIZE (inlet / outlet)	168.3 x 7.11 | 219.1 x 6.35	.....
	PIPE MATERIAL (inlet / outlet)	SA 106 GR B | SA 106 GR B	.....|.....
BODY	MODEL NO.	BIDDER TO INDICATE	.....
	TYPE OF BODY: GUIDING : NO. OF PORTS	[■] GLOBE [] ANGLE | [] TOP [■] CAGE | ONE	.....|.....|.....|.....
	BODY SIZE: PORT SIZE: DESIGN CV	BIDDER TO INDICATE	.....|.....|.....
	END CONNECTION & RATING (ANSI)	[■] BWE [] SWE [] FLANGED	.....
	BODY MATERIAL	[] A216 WCB [■] A217 WC9 [] SS [] A217 CS	.....
		[] A351 CF8M	.....
	PACKING: MATERIAL SINGLE / DOUBLE	[] PTFE [■] GRAFOIL [■] DOUBLE [] SINGLE	.....|.....
	BONNET TYPE	[■] STD [] EXTENDED [] FINNED	.....
	TRIM FORM	[■] LINEAR [] EQ. PERCENTAGE	.....
		[] QUICK OPEN (ON/OFF)	
	TRIM MATERIAL: SEAT | PLUG	17-4 PH SS | 17-4 PH SS	.....|.....
	: CAGE | GUIDE BUSH	17-4 PH SS | 17-4 PH SS	.....|.....
	FLOW	BIDDER TO INDICATE (BELOW/ABOVE SEAT)	.....
	OUTLET VELOCITY	[■] < 7 M/SEC (WATER) | [] MAC NO. < 1/3(STM)	.....
	REQUIRED LEAKAGE CLASS	[] II [] III [] IV [■] V [] VI	.....
	NOISE LEVEL (dBA) (spec. 3.1.14)	LESS THAN 85 dBA	.....
	VACUUM SERVICE	[■] YES [] NO	.....
	ANTI CAVITATION TRIM	[] YES [■] NO	.....
PNEUMATIC ACTUATOR	MODEL NO. & SIZE	BIDDER TO INDICATE	.....|.....
	CLOSE AT : OPEN AT (KG/CM2g)	TO SUIT ACTUATOR (AIR TO CLOSE)	.....|.....
	TRAVEL TIME FOR	<10 sec	.....
	OPEN TO CLOSE, CLOSE TO OPEN		.....
	VLV POSN. ON ELEC SIGNAL FAILURE	[■] TO OPEN [] STAYPUT [] TO CLOSE	.....
	VALVE POSN. ON SUPPLY AIR FAILURE	[■] TO OPEN	.....
ACCESSORIES	SMART POSITIONER	[■] REQUIRED [] NOT REQUIRED	.....
	AIR FILTER REGULATOR	[■] REQUIRED [] NOT REQUIRED	.....
	AIR LOCK RELAY	[■] REQUIRED [] NOT REQUIRED	.....
	POSITION LIMIT SWITCH	[■] REQUIRED [] NOT REQUIRED	.....
	POSITION TRANSMITTER	PART OF SMART POSITIONER	.....
	SOLENOID VALVE	[■] REQUIRED [] NOT REQUIRED	.....
	E/P CONVERTER	PART OF SMART POSITIONER	.....
	JUNCTION BOX	[■] REQUIRED [] NOT REQUIRED	.....
	HAND WHEEL (SIDE MOUNTED)	[■] REQUIRED	.....
	LOCAL POSITION INDICATOR	[■] REQUIRED	.....
	ELECTRO PNEUMATIC POSITIONER	[] REQUIRED [■] NOT REQUIRED	.....

Tag No.: DRV-43 / LCJ41AA101 Qty.: 1 no. Data Sheet No. PES-145-06-DS1-0
P&ID No.: PE-DG-410-100-N104

DATA SHEET – A & B

DATA SHEET – A FOR CONTROL VALVE (WITH PNEUMATIC ACTUATOR) (TO BE FILLED BY PURCHASER)			DATA SHEET – B (TO BE FILLED UP BY BIDDER)
PERFORMANCE OF VALVE	LINEARITY	± 1%	.....
	HYSTERISIS	± 0.5%	.....
	SENSITIVITY	± 0.5%	.....
	ACCURACY (OVERALL)	± 1%	.....

SERVICE CONDITION

SL. No. +	LOAD	FLOW (T/HR)	INLET PR. KG/CM2(A)	OUTLET PR. KG/CM2(A)	TEMP DEG (C)	CALC ULATED CV	% VLV LIFT	VLV O/L VELOCITY
1.	40% MCR	22.337	2.31	1.24	Saturated			
2.	60% MCR	36.038	3.26	1.73	Saturated			
3.	100% MCR	68.626	5.08	2.68	Saturated			
4.	VWO	74.835	5.40	2.85	Saturated			
5.	LPH-3 OUT	150	4	0.3	Saturated			

VALVE TYPE	[] CAVITATION [■] FLASHING [] HIGH DP
MAX SHUT OFF PRESS (KG/CM2g) 7 BODY DESIGN : PRESS (KG/CM2g) | TEMP (DEG C) 7/VACUUM | **160** IBR FORM III-C [] REQUIRED [■] NOT REQUIRED	....|..... .....
TOTAL WEIGHT (VALVE + ACTUATOR + ACCESSORIES) Kg	.....

Tag No.: DMV-2 / LCR81AA101 Qty.: 1 no. Data Sheet No. PES-145-06-DS1-0
P&ID No.: PE-DG-410-100-N106

DATA SHEET – A & B

DATA SHEET – A FOR CONTROL VALVE (WITH PNEUMATIC ACTUATOR) (TO BE FILLED BY PURCHASER)			DATA SHEET – B (TO BE FILLED UP BY BIDDER)
GENERAL	PROJECT	APPDCL - 1 X 800 MW KRISHNAPATTANAM TPS	.....
	SERVICE	DM NORMAL MU TO HOTWELL	.....
	LOCATION	[■] INDOOR [] OUTDOOR	.....
	DUTY	[] ON/OFF [■] MODULATING	.....
	PIPE SIZE (inlet / outlet)	88.9 x 3.05 | 88.9 x 3.05	.....
	PIPE MATERIAL (inlet / outlet)	SA 312 TP 304 (ERW) | SA 312 TP 304 (ERW)	.....|.....
BODY	MODEL NO.	BIDDER TO INDICATE	.....
	TYPE OF BODY: GUIDING : NO. OF PORTS	[■] GLOBE [] ANGLE | [] TOP [■] CAGE | ONE	.....|.....|.....|.....
	BODY SIZE: PORT SIZE: DESIGN CV	BIDDER TO INDICATE	.....|.....|.....
	END CONNECTION & RATING (ANSI)	[■] BWE [] SWE [] FLANGED	.....
	BODY MATERIAL	[] A216 WCB [] A217 WC6 [] SS [] A217 CS	.....
		[■] A351 CF8M	.....
	PACKING: MATERIAL SINGLE / DOUBLE	[] PTFE [■] GRAFOIL [■] DOUBLE [] SINGLE	.....|.....
	BONNET TYPE	[■] STD [] EXTENDED [] FINNED	.....
	TRIM FORM	[] LINEAR [■] EQ. PERCENTAGE	.....
		[] QUICK OPEN (ON/OFF)	
	TRIM MATERIAL: SEAT | PLUG	SS 316 STELLITED | SS 316 STELLITED	.....|.....
	: CAGE | GUIDE BUSH	SS 316 STELLITED | SS 316 STELLITED	.....|.....
	FLOW	BIDDER TO INDICATE (BELOW/ABOVE SEAT)	.....
	OUTLET VELOCITY	[■] < 7 M/SEC (WATER) | [] MAC NO. < 1/3(STM)	.....
	REQUIRED LEAKAGE CLASS	[] II [] III [] IV [■] V [] VI	.....
	NOISE LEVEL (dBA) (spec. 3.1.14)	LESS THAN 85 dBA	.....
	VACUUM SERVICE	[■] YES [] NO	.....
	ANTI CAVITATION TRIM	[■] YES [] NO	.....
PNEUMATIC ACTUATOR	MODEL NO. & SIZE	BIDDER TO INDICATE	.....|.....
	CLOSE AT : OPEN AT (KG/CM2g)	TO SUIT ACTUATOR (AIR TO CLOSE)	.....|.....
	TRAVEL TIME FOR	<10 sec	.....
	OPEN TO CLOSE, CLOSE TO OPEN		.....
	VLV POSN. ON ELEC SIGNAL FAILURE	[■] TO OPEN [] STAYPUT [] TO CLOSE	.....
	VALVE POSN. ON SUPPLY AIR FAILURE	[■] STAYPUT	.....
ACCESSORIES	SMART POSITIONER	[■] REQUIRED [] NOT REQUIRED	.....
	AIR FILTER REGULATOR	[■] REQUIRED [] NOT REQUIRED	.....
	AIR LOCK RELAY	[■] REQUIRED [] NOT REQUIRED	.....
	POSITION LIMIT SWITCH	[■] REQUIRED [] NOT REQUIRED	.....
	POSITION TRANSMITTER	PART OF SMART POSITIONER	.....
	SOLENOID VALVE	[■] REQUIRED [] NOT REQUIRED	.....
	E/P CONVERTER	PART OF SMART POSITIONER	.....
	JUNCTION BOX	[■] REQUIRED [] NOT REQUIRED	.....
	HAND WHEEL (SIDE MOUNTED)	[■] REQUIRED	.....
	LOCAL POSITION INDICATOR	[■] REQUIRED	.....
	ELECTRO PNEUMATIC POSITIONER	[] REQUIRED [■] NOT REQUIRED	.....

Tag No.: DMV-2 / LCR81AA101 Qty.: 1 no. Data Sheet No. PES-145-06-DS1-0
P&ID No.: PE-DG-410-100-N106

DATA SHEET – A & B

DATA SHEET – A FOR CONTROL VALVE (WITH PNEUMATIC ACTUATOR) (TO BE FILLED BY PURCHASER)			DATA SHEET – B (TO BE FILLED UP BY BIDDER)
PERFORMANCE OF VALVE	LINEARITY	± 1%	.....
	HYSTERISIS	± 0.5%	.....
	SENSITIVITY	± 0.5%	.....
	ACCURACY (OVERALL)	± 1%	.....

SERVICE CONDITION

SL. No. +	LOAD	FLOW (T/HR)	INLET PR. KG/CM2(A)	OUTLET PR. KG/CM2(A)	TEMP DEG (C)	CALC ULATED CV	% VLV LIFT	VLV O/L VELOCITY
1.	MIN. (0.5% MU)	13	4	0.5	33			
2.	NORMAL (1% MU)	26	3.5	0.5	33			
3.	HW MU PUMP DESIGN FLOW	75	2.5	0.6	33			
4.	2% MU	52	3	0.5	33			

VALVE TYPE	[■] CAVITATION [] FLASHING [] HIGH DP
MAX SHUT OFF PRESS (KG/CM2g) 10 BODY DESIGN : PRESS (KG/CM2g) | TEMP (DEG C) 10/VACUUM | 55 IBR FORM III-C [] REQUIRED [■] NOT REQUIRED	....|..... .....
TOTAL WEIGHT (VALVE + ACTUATOR + ACCESSORIES) Kg	.....

NOTES: ANTI CAVITATION TRIM SHALL BE PROVIDED

Tag No.: DMV-5 / LCR83AA101 Qty.: 1 no. Data Sheet No. PES-145-06-DS1-0
P&ID No.: PE-DG-410-100-N106

DATA SHEET – A & B

DATA SHEET – A FOR CONTROL VALVE (WITH PNEUMATIC ACTUATOR) (TO BE FILLED BY PURCHASER)			DATA SHEET – B (TO BE FILLED UP BY BIDDER)
GENERAL	PROJECT	APPDCL - 1 X 800 MW KRISHNAPATTANAM TPS	.....
	SERVICE	DM EMERGENCY MU TO HOTWELL	.....
	LOCATION	[■] INDOOR [] OUTDOOR	.....
	DUTY	[] ON/OFF [■] MODULATING	.....
	PIPE SIZE (inlet / outlet)	114.3 x 3.05 |114.3 x 3.05	.....
	PIPE MATERIAL (inlet / outlet)	SA 312 TP 304 (ERW) | SA 312 TP 304 (ERW)	.....|.....
BODY	MODEL NO.	BIDDER TO INDICATE	.....
	TYPE OF BODY: GUIDING : NO. OF PORTS	[■] GLOBE [] ANGLE | [] TOP [■] CAGE | ONE	.....|.....|.....|.....
	BODY SIZE: PORT SIZE: DESIGN CV	BIDDER TO INDICATE	.....|.....|.....
	END CONNECTION & RATING (ANSI)	[■] BWE [] SWE [] FLANGED	.....
	BODY MATERIAL	[] A216 WCB [] A217 WC6 [] SS [] A217 CS	.....
		[■] A351 CF8M	.....
	PACKING: MATERIAL SINGLE / DOUBLE	[] PTFE [■] GRAFOIL [■] DOUBLE [] SINGLE	.....|.....
	BONNET TYPE	[■] STD [] EXTENDED [] FINNED	.....
	TRIM FORM	[] LINEAR [■] EQ. PERCENTAGE	.....
		[] QUICK OPEN (ON/OFF)	
	TRIM MATERIAL: SEAT | PLUG	SS 316 STELLITED | SS 316 STELLITED	.....|.....
	: CAGE | GUIDE BUSH	SS 316 STELLITED | SS 316 STELLITED	.....|.....
	FLOW	BIDDER TO INDICATE (BELOW/ABOVE SEAT)	.....
	OUTLET VELOCITY	[■] < 7 M/SEC (WATER) | [] MAC NO. < 1/3(STM)	.....
	REQUIRED LEAKAGE CLASS	[] II [] III [] IV [■] V [] VI	.....
	NOISE LEVEL (dBA) (spec. 3.1.14)	LESS THAN 85 dBA	.....
	VACUUM SERVICE	[■] YES [] NO	.....
	ANTI CAVITATION TRIM	[■] YES [] NO	.....
PNEUMATIC ACTUATOR	MODEL NO. & SIZE	BIDDER TO INDICATE	.....|.....
	CLOSE AT : OPEN AT (KG/CM2g)	TO SUIT ACTUATOR (AIR TO OPEN)	.....|.....
	TRAVEL TIME FOR	<10 sec	.....
	OPEN TO CLOSE, CLOSE TO OPEN		.....
	VLV POSN. ON ELEC SIGNAL FAILURE	[] TO OPEN [■] STAYPUT [] TO CLOSE	.....
	VALVE POSN. ON SUPPLY AIR FAILURE	[■] STAYPUT	.....
ACCESSORIES	SMART POSITIONER	[■] REQUIRED [] NOT REQUIRED	.....
	AIR FILTER REGULATOR	[■] REQUIRED [] NOT REQUIRED	.....
	AIR LOCK RELAY	[■] REQUIRED [] NOT REQUIRED	.....
	POSITION LIMIT SWITCH	[■] REQUIRED [] NOT REQUIRED	.....
	POSITION TRANSMITTER	PART OF SMART POSITIONER	.....
	SOLENOID VALVE	[■] REQUIRED [] NOT REQUIRED	.....
	E/P CONVERTER	PART OF SMART POSITIONER	.....
	JUNCTION BOX	[■] REQUIRED [] NOT REQUIRED	.....
	HAND WHEEL (SIDE MOUNTED)	[■] REQUIRED	.....
	LOCAL POSITION INDICATOR	[■] REQUIRED	.....
	ELECTRO PNEUMATIC POSITIONER	[] REQUIRED [■] NOT REQUIRED	.....

Tag No.: DMV-5 / LCR83AA101 Qty.: 1 no. Data Sheet No. PES-145-06-DS1-0
P&ID No.: PE-DG-410-100-N106

DATA SHEET – A & B

DATA SHEET – A FOR CONTROL VALVE (WITH PNEUMATIC ACTUATOR) (TO BE FILLED BY PURCHASER)			DATA SHEET – B (TO BE FILLED UP BY BIDDER)
PERFORMANCE OF VALVE	LINEARITY	± 1%	.....
	HYSTERISIS	± 0.5%	.....
	SENSITIVITY	± 0.5%	.....
	ACCURACY (OVERALL)	± 1%	.....

SERVICE CONDITION

SL. No. +	LOAD	FLOW (T/HR)	INLET PR. KG/CM2(A)	OUTLET PR. KG/CM2(A)	TEMP DEG (C)	CALC ULATED CV	% VLV LIFT	VLV O/L VELOCITY
1.	MIN. (1% MU)	26	4	0.45	33			
2.	MAX. (5% MU)	130	3	0.5	33			

VALVE TYPE	[■] CAVITATION [] FLASHING [] HIGH DP
MAX SHUT OFF PRESS (KG/CM2g) 7 BODY DESIGN : PRESS (KG/CM2g) | TEMP (DEG C) 7/VACUUM | 55 IBR FORM III-C [] REQUIRED [■] NOT REQUIRED	....|..... .....
TOTAL WEIGHT (VALVE + ACTUATOR + ACCESSORIES) Kg	.....

NOTES: ANTI CAVITATION TRIM SHALL BE PROVIDED

Tag No.: FDV-8 / LAB50AA101 Qty.: 1 no. Data Sheet No. PES-145-06-DS1-0
P&ID No.: PE-DG-410-100-N105

DATA SHEET – A & B

DATA SHEET – A FOR CONTROL VALVE (WITH PNEUMATIC ACTUATOR) (TO BE FILLED BY PURCHASER)			DATA SHEET – B (TO BE FILLED UP BY BIDDER)
GENERAL	PROJECT	APPDCL - 1 X 800 MW KRISHNAPATTANAM TPS	.....
	SERVICE	LOW LOAD FEED CONTROL	.....
	LOCATION	[■] INDOOR [] OUTDOOR	.....
	DUTY	[] ON/OFF [■] MODULATING	.....
	PIPE SIZE (inlet / outlet)	406.4 x 70 | 406.4 x 70	.....
	PIPE MATERIAL (inlet / outlet)	SA 106 GR C | SA 106 GR C	.....|.....
BODY	MODEL NO.	BIDDER TO INDICATE	.....
	TYPE OF BODY: GUIDING : NO. OF PORTS	[■] GLOBE [] ANGLE | [] TOP [■] CAGE | ONE	.....|.....|.....|.....
	BODY SIZE: PORT SIZE: DESIGN CV	BIDDER TO INDICATE	.....|.....|.....
	END CONNECTION & RATING (ANSI)	[■] BWE [] SWE [] FLANGED	.....
	BODY MATERIAL	[] A216 WCB [■] A217 WC9 [] SS [] A217 CS	.....
		[] A351 CF8M	.....
	PACKING: MATERIAL SINGLE / DOUBLE	[] PTFE [■] GRAFOIL [] DOUBLE [■] SINGLE	.....|.....
	BONNET TYPE	[■] STD [] EXTENDED [] FINNED	.....
	TRIM FORM	[] LINEAR [■] EQ. PERCENTAGE **(MULTI STAGE & MULTI PATH)** [] QUICK OPEN	.....
	TRIM MATERIAL: SEAT | PLUG	440C | 440C	.....|.....
	: CAGE | GUIDE BUSH	440C | 440C	.....|.....
	FLOW	BIDDER TO INDICATE (BELOW/ABOVE SEAT)	.....
	OUTLET VELOCITY	[■] < 7 M/SEC (WATER) | [] MAC NO. < 1/3(STM)	.....
	REQUIRED LEAKAGE CLASS	[] II [] III [] IV [■] V [] VI	.....
	NOISE LEVEL (dBA) (spec. 3.1.14)	LESS THAN 85 dBA	.....
	VACUUM SERVICE	[] YES [■] NO	.....
	ANTI CAVITATION TRIM	[■] YES [] NO	.....
PNEUMATIC ACTUATOR	MODEL NO. & SIZE	BIDDER TO INDICATE	.....|.....
	CLOSE AT : OPEN AT (KG/CM2g)	TO SUIT ACTUATOR (AIR TO CLOSE)	.....|.....
	TRAVEL TIME FOR	<10 sec	.....
	OPEN TO CLOSE, CLOSE TO OPEN		.....
	VLV POSN. ON ELEC SIGNAL FAILURE	[■] TO OPEN [] STAYPUT [] TO CLOSE	.....
	VALVE POSN. ON SUPPLY AIR FAILURE	[■] STAYPUT	.....
ACCESSORIES	SMART POSITIONER	[■] REQUIRED [] NOT REQUIRED	.....
	AIR FILTER REGULATOR	[■] REQUIRED [] NOT REQUIRED	.....
	AIR LOCK RELAY	[■] REQUIRED [] NOT REQUIRED	.....
	POSITION LIMIT SWITCH	[■] REQUIRED [] NOT REQUIRED	.....
	POSITION TRANSMITTER	PART OF SMART POSITIONER	.....
	SOLENOID VALVE	[■] REQUIRED [] NOT REQUIRED	.....
	E/P CONVERTER	PART OF SMART POSITIONER	.....
	JUNCTION BOX	[■] REQUIRED [] NOT REQUIRED	.....
	HAND WHEEL (SIDE MOUNTED)	[■] REQUIRED	.....
	LOCAL POSITION INDICATOR	[■] REQUIRED	.....
	ELECTRO PNEUMATIC POSITIONER	[] REQUIRED [■] NOT REQUIRED	.....

Tag No.: FDV-8 / LAB50AA101 Qty.: 1 no. Data Sheet No. PES-145-06-DS1-0
P&ID No.: PE-DG-410-100-N105

DATA SHEET – A & B

DATA SHEET – A FOR CONTROL VALVE (WITH PNEUMATIC ACTUATOR) (TO BE FILLED BY PURCHASER)			DATA SHEET – B (TO BE FILLED UP BY BIDDER)
PERFORMANCE OF VALVE	LINEARITY HYSTERISIS SENSITIVITY ACCURACY (OVERALL)	± 1% ± 0.5% ± 0.5% ± 1%	....

SERVICE CONDITION

SL. No. +	LOAD	FLOW (T/HR)	INLET PR. KG/CM2(A)	OUTLET PR. KG/CM2(A)	TEMP DEG (C)	CALC ULATED CV	% VLV LIFT	VLV O/L VELOCITY
1.	5% MCR (MIN.SPEED)	130	167	21	111			
2.	15% MCR	390	165	32	111			
3.	30% MCR	780	155	115	111 TO 138			
4.	40% MCR	880	185	148	157			
5.	40% Boiler Min R/c	1034	143	20	111			

VALVE TYPE	[■] CAVITATION [] FLASHING [■] HIGH DP
MAX SHUT OFF PRESS (KG/CM2g) 450 BODY DESIGN : PRESS (KG/CM2g) | TEMP (DEG C) 450 | 200 IBR FORM III-C [■] REQUIRED [] NOT REQUIRED	....|..... .....
TOTAL WEIGHT (VALVE + ACTUATOR + ACCESSORIES) Kg	.....

Tag No.: DRV-52 / LCA83AA101 Qty.: …1 no. Data Sheet No. PES-145-06-DS1-0
P&ID No.: PE-DG-410-100-N106

DATA SHEET – A & B

DATA SHEET – A FOR CONTROL VALVE (WITH PNEUMATIC ACTUATOR) (TO BE FILLED BY PURCHASER)			DATA SHEET – B (TO BE FILLED UP BY BIDDER)
GENERAL	PROJECT	APPDCL - 1 X 800 MW KRISHNAPATTANAM TPS	……
	SERVICE	DRIP PUMP DISCHARGE CONTROL	……
	LOCATION	[■] INDOOR [] OUTDOOR	……
	DUTY	[] ON/OFF [■] MODULATING	……
	PIPE SIZE (inlet / outlet)	219x 8.18 | 219x 8.18	……
	PIPE MATERIAL (inlet / outlet)	SA 106 GR B | SA 106 GR B	……|……
BODY	MODEL NO.	BIDDER TO INDICATE	……
	TYPE OF BODY: GUIDING : NO. OF PORTS	[■] GLOBE [] ANGLE | [] TOP [■] CAGE | ONE	……|……|……|……
	BODY SIZE: PORT SIZE: DESIGN CV	BIDDER TO INDICATE	……|……|……
	END CONNECTION & RATING (ANSI)	[■] BWE [] SWE [] FLANGED	……
	BODY MATERIAL	[■] A216 WCB [] A217 WC9 [] SS [] A217 CS	……
		[] A351 CF8M	……
	PACKING: MATERIAL SINGLE / DOUBLE	[] PTFE [■] GRAFOIL [■] DOUBLE [] SINGLE	……|……
	BONNET TYPE	[■] STD [] EXTENDED [] FINNED	……
	TRIM FORM	[] LINEAR [■] EQ. PERCENTAGE	……
		[] QUICK OPEN (ON/OFF)	
	TRIM MATERIAL: SEAT | PLUG	SS 316 STELLITED | SS 316 STELLITED	……|……
	: CAGE | GUIDE BUSH	SS 316 STELLITED | SS 316 STELLITED	……|……
	FLOW	BIDDER TO INDICATE (BELOW/ABOVE SEAT)	……
	OUTLET VELOCITY	[■] < 7 M/SEC (WATER) | [] MAC NO. < 1/3(STM)	……
	REQUIRED LEAKAGE CLASS	[] II [] III [] IV [■] V [] VI	……
	NOISE LEVEL (dBA) (spec. 3.1.14)	LESS THAN 85 dBA	……
	VACUUM SERVICE	[] YES [■] NO	……
	ANTI CAVITATION TRIM	[] YES [■] NO	……
PNEUMATIC ACTUATOR	MODEL NO. & SIZE	BIDDER TO INDICATE	……|……
	CLOSE AT : OPEN AT (KG/CM2g)	TO SUIT ACTUATOR (AIR TO OPEN)	……|……
	TRAVEL TIME FOR	<10 sec	……
	OPEN TO CLOSE, CLOSE TO OPEN		……
	VLV POSN. ON ELEC SIGNAL FAILURE	[] TO OPEN [] STAYPUT [■] TO CLOSE	……
	VALVE POSN. ON SUPPLY AIR FAILURE	[■] STAYPUT	……
ACCESSORIES	SMART POSITIONER	[■] REQUIRED [] NOT REQUIRED	……
	AIR FILTER REGULATOR	[■] REQUIRED [] NOT REQUIRED	……
	AIR LOCK RELAY	[■] REQUIRED [] NOT REQUIRED	……
	POSITION LIMIT SWITCH	[■] REQUIRED [] NOT REQUIRED	……
	POSITION TRANSMITTER	PART OF SMART POSITIONER	……
	SOLENOID VALVE	[■] REQUIRED [] NOT REQUIRED	……
	E/P CONVERTER	PART OF SMART POSITIONER	……
	JUNCTION BOX	[■] REQUIRED [] NOT REQUIRED	……
	HAND WHEEL (SIDE MOUNTED)	[■] REQUIRED	……
	LOCAL POSITION INDICATOR	[■] REQUIRED	……
	ELECTRO PNEUMATIC POSITIONER	[] REQUIRED [■] NOT REQUIRED	……

Tag No.: DRV-52 / LCA83AA101 Qty.: 1 no. Data Sheet No. PES-145-06-DS1-0

DATA SHEET – A & B

DATA SHEET – A FOR CONTROL VALVE (WITH PNEUMATIC ACTUATOR) (TO BE FILLED BY PURCHASER)			DATA SHEET – B (TO BE FILLED UP BY BIDDER)
PERFORMANCE OF VALVE	LINEARITY HYSTERISIS SENSITIVITY ACCURACY (OVERALL)	± 1% ± 0.5% ± 0.5% ± 1%	....

SERVICE CONDITION	SL. No. +	LOAD	FLOW (T/HR)	INLET PR. KG/CM2(A)	OUTLET PR. KG/CM2(A)	TEMP DEG (C)	CALC ULATED CV	% VLV LIFT	VLV O/L VELOCITY
	1.	40% MCR	67.793	27	12	105.1			
	2.	60% MCR	107.53	26	15	115.2			
	3.	100% MCR	199.782	25	20.5	129.3			
	4.	VWO	217.144	24.5	21.5	131.3			
	5.	PUMP DESIGN	250	24	21.5	132			
	6.	LPH-1&2, DC-1&2 BYPASS	286.5	22.5	20.5	125.5			

	VALVE TYPE	[] CAVITATION [] FLASHING [] HIGH DP
	MAX SHUT OFF PRESS (KG/CM2g) 47 BODY DESIGN : PRESS (KG/CM2g) | TEMP (DEG C) 47/VACUUM | 140 IBR FORM III-C [] REQUIRED [■] NOT REQUIRED	....|..... .....
TOTAL WEIGHT (VALVE + ACTUATOR + ACCESSORIES) Kg		.....

Tag No.: DRV-78 / LCJ23AA101 Qty.: 1 no. Data Sheet No. PES-145-06-DS1-0
P&ID No.: PE-DG-410-100-N104

DATA SHEET – A & B

DATA SHEET – A FOR CONTROL VALVE (WITH PNEUMATIC ACTUATOR) (TO BE FILLED BY PURCHASER)			DATA SHEET – B (TO BE FILLED UP BY BIDDER)
GENERAL	PROJECT	APPDCL - 1 X 800 MW KRISHNAPATTANAM TPS	.....
	SERVICE	LPH-2A&2B NORMAL DRAIN TO DC-1	.....
	LOCATION	[■] INDOOR [] OUTDOOR	.....
	DUTY	[] ON/OFF [■] MODULATING	.....
	PIPE SIZE (inlet / outlet)	219.1 x 6.35 | 219.1 x 6.35	.....
	PIPE MATERIAL (inlet / outlet)	SA 106 GR B | SA 106 GR B	.....|.....
BODY	MODEL NO.	BIDDER TO INDICATE	.....
	TYPE OF BODY: GUIDING : NO. OF PORTS	[■] GLOBE [] ANGLE | [] TOP [■] CAGE | ONE	.....|.....|.....|.....
	BODY SIZE: PORT SIZE: DESIGN CV	BIDDER TO INDICATE	.....|.....|.....
	END CONNECTION & RATING (ANSI)	[■] BWE [] SWE [] FLANGED	.....
	BODY MATERIAL	[] A216 WCB [■] A217 WC6 [] SS [] A217 CS	.....
		[] A351 CF8M	.....
	PACKING: MATERIAL SINGLE / DOUBLE	[] PTFE [■] GRAFOIL [■] DOUBLE [] SINGLE	.....|.....
	BONNET TYPE	[■] STD [] EXTENDED [] FINNED	.....
	TRIM FORM	[■] LINEAR [] EQ. PERCENTAGE	.....
		[] QUICK OPEN (ON/OFF)	
	TRIM MATERIAL: SEAT | PLUG	17-4 PH SS | 17-4 PH SS	.....|.....
	: CAGE | GUIDE BUSH	17-4 PH SS | 17-4 PH SS	.....|.....
	FLOW	BIDDER TO INDICATE (BELOW/ABOVE SEAT)	.....
	OUTLET VELOCITY	[■] < 7 M/SEC (WATER) | [] MAC NO. < 1/3(STM)	.....
	REQUIRED LEAKAGE CLASS	[] II [] III [] IV [■] V [] VI	.....
	NOISE LEVEL (dBA) (spec. 3.1.14)	LESS THAN 85 dBA	.....
	VACUUM SERVICE	[■] YES [] NO	.....
	ANTI CAVITATION TRIM	[] YES [■] NO	.....
PNEUMATIC ACTUATOR	MODEL NO. & SIZE	BIDDER TO INDICATE	.....|.....
	CLOSE AT : OPEN AT (KG/CM2g)	TO SUIT ACTUATOR (AIR TO OPEN)	.....|.....
	TRAVEL TIME FOR	<10 sec	.....
	OPEN TO CLOSE, CLOSE TO OPEN		.....
	VLV POSN. ON ELEC SIGNAL FAILURE	[] TO OPEN [] STAYPUT [■] TO CLOSE	.....
	VALVE POSN. ON SUPPLY AIR FAILURE	[■] TO CLOSE	.....
ACCESSORIES	SMART POSITIONER	[■] REQUIRED [] NOT REQUIRED	.....
	AIR FILTER REGULATOR	[■] REQUIRED [] NOT REQUIRED	.....
	AIR LOCK RELAY	[■] REQUIRED [] NOT REQUIRED	.....
	POSITION LIMIT SWITCH	[■] REQUIRED [] NOT REQUIRED	.....
	POSITION TRANSMITTER	PART OF SMART POSITIONER	.....
	SOLENOID VALVE	[■] REQUIRED [] NOT REQUIRED	.....
	E/P CONVERTER	PART OF SMART POSITIONER	.....
	JUNCTION BOX	[■] REQUIRED [] NOT REQUIRED	.....
	HAND WHEEL (SIDE MOUNTED)	[■] REQUIRED	.....
	LOCAL POSITION INDICATOR	[■] REQUIRED	.....
	ELECTRO PNEUMATIC POSITIONER	[] REQUIRED [■] NOT REQUIRED	.....

Tag No.: DRV-78 / LCJ23AA101 Qty.: 1 no. Data Sheet No. PES-145-06-DS1-0
P&ID No.: PE-DG-410-100-N104

DATA SHEET – A & B

DATA SHEET – A FOR CONTROL VALVE (WITH PNEUMATIC ACTUATOR) (TO BE FILLED BY PURCHASER)			DATA SHEET – B (TO BE FILLED UP BY BIDDER)
PERFORMANCE OF VALVE	LINEARITY	± 1%	.....
	HYSTERISIS	± 0.5%	.....
	SENSITIVITY	± 0.5%	.....
	ACCURACY (OVERALL)	± 1%	.....

SERVICE CONDITION

SL. No. +	LOAD	FLOW (T/HR)	INLET PR. KG/CM2(A)	OUTLET PR. KG/CM2(A)	TEMP DEG (C)	CALC ULATED CV	% VLV LIFT	VLV O/L VELOCITY
1.	40% MCR	16.933	0.2454	0.1205	64.1			
2.	60% MCR	27.856	0.3453	0.1638	71.9			
3.	100% MCR	53.498	0.5346	0.2439	82.5			
4.	VWO	58.309	0.5671	0.2576	84.0			
5	MAX	62	0.8	0.35	96.1			

VALVE TYPE	[] CAVITATION [■] FLASHING [] HIGH DP
MAX SHUT OFF PRESS (KG/CM2g) 7 BODY DESIGN : PRESS (KG/CM2g) | TEMP (DEG C) 7/VACUUM | 100 IBR FORM III-C [] REQUIRED [■] NOT REQUIRED	....|..... .....
TOTAL WEIGHT (VALVE + ACTUATOR + ACCESSORIES) Kg	.....

Tag No.: DRV-81 / LCJ24AA101 Qty.: 1 no. Data Sheet No. PES-145-06-DS1-0
P&ID No.: PE-DG-410-100-N104

DATA SHEET – A & B

DATA SHEET – A FOR CONTROL VALVE (WITH PNEUMATIC ACTUATOR) (TO BE FILLED BY PURCHASER)			DATA SHEET – B (TO BE FILLED UP BY BIDDER)
GENERAL	PROJECT	APPDCL - 1 X 800 MW KRISHNAPATTANAM TPS	.....
	SERVICE	LPH-2A&2B ALT. DRAIN TO F/T-B	.....
	LOCATION	[■] INDOOR [] OUTDOOR	.....
	DUTY	[] ON/OFF [■] MODULATING	.....
	PIPE SIZE (inlet / outlet)	219.1 x 8.18 | 219.1 x 8.18	.....
	PIPE MATERIAL (inlet / outlet)	SA 106 GR B | SA 106 GR B	.....|.....
BODY	MODEL NO.	BIDDER TO INDICATE	.....
	TYPE OF BODY: GUIDING : NO. OF PORTS	[■] GLOBE [] ANGLE | [] TOP [■] CAGE | ONE	.....|.....|.....|.....
	BODY SIZE: PORT SIZE: DESIGN CV	BIDDER TO INDICATE	.....|.....|.....
	END CONNECTION & RATING (ANSI)	[■] BWE [] SWE [] FLANGED	.....
	BODY MATERIAL	[] A216 WCB [■] A217 WC6 [] SS [] A217 CS	.....
		[] A351 CF8M	.....
	PACKING: MATERIAL SINGLE / DOUBLE	[] PTFE [■] GRAFOIL [■] DOUBLE [] SINGLE	.....|.....
	BONNET TYPE	[■] STD [] EXTENDED [] FINNED	.....
	TRIM FORM	[■] LINEAR [] EQ. PERCENTAGE	.....
		[] QUICK OPEN (ON/OFF)	
	TRIM MATERIAL: SEAT | PLUG	17-4 PH SS | 17-4 PH SS	.....|.....
	: CAGE | GUIDE BUSH	17-4 PH SS | 17-4 PH SS	.....|.....
	FLOW	BIDDER TO INDICATE (BELOW/ABOVE SEAT)	.....
	OUTLET VELOCITY	[■] < 7 M/SEC (WATER) | [] MAC NO. < 1/3(STM)	.....
	REQUIRED LEAKAGE CLASS	[] II [] III [] IV [■] V [] VI	.....
	NOISE LEVEL (dBA) (spec. 3.1.14)	LESS THAN 85 dBA	.....
	VACUUM SERVICE	[■] YES [] NO	.....
	ANTI CAVITATION TRIM	[] YES [■] NO	.....
PNEUMATIC ACTUATOR	MODEL NO. & SIZE	BIDDER TO INDICATE	.....|.....
	CLOSE AT : OPEN AT (KG/CM2g)	TO SUIT ACTUATOR (AIR TO CLOSE)	.....|.....
	TRAVEL TIME FOR	<10 sec	.....
	OPEN TO CLOSE, CLOSE TO OPEN		.....
	VLV POSN. ON ELEC SIGNAL FAILURE	[■] TO OPEN [] STAYPUT [] TO CLOSE	.....
	VALVE POSN. ON SUPPLY AIR FAILURE	[■] TO OPEN	.....
ACCESSORIES	SMART POSITIONER	[■] REQUIRED [] NOT REQUIRED	.....
	AIR FILTER REGULATOR	[■] REQUIRED [] NOT REQUIRED	.....
	AIR LOCK RELAY	[■] REQUIRED [] NOT REQUIRED	.....
	POSITION LIMIT SWITCH	[■] REQUIRED [] NOT REQUIRED	.....
	POSITION TRANSMITTER	PART OF SMART POSITIONER	.....
	SOLENOID VALVE	[■] REQUIRED [] NOT REQUIRED	.....
	E/P CONVERTER	PART OF SMART POSITIONER	.....
	JUNCTION BOX	[■] REQUIRED [] NOT REQUIRED	.....
	HAND WHEEL (SIDE MOUNTED)	[■] REQUIRED	.....
	LOCAL POSITION INDICATOR	[■] REQUIRED	.....
	ELECTRO PNEUMATIC POSITIONER	[] REQUIRED [■] NOT REQUIRED	.....

Tag No.: DRV-81 / LCJ24AA101 Qty.: 1 no. Data Sheet No. PES-145-06-DS1-0
P&ID No.: PE-DG-410-100-N104

DATA SHEET – A & B

DATA SHEET – A FOR CONTROL VALVE (WITH PNEUMATIC ACTUATOR) (TO BE FILLED BY PURCHASER)			DATA SHEET – B (TO BE FILLED UP BY BIDDER)
PERFORMANCE OF VALVE	LINEARITY HYSTERISIS SENSITIVITY ACCURACY (OVERALL)	± 1% ± 0.5% ± 0.5% ± 1%	....

	SL. No. +	LOAD	FLOW (T/HR)	INLET PR. KG/CM2(A)	OUTLET PR. KG/CM2(A)	TEMP DEG (C)	CALC ULATED CV	% VLV LIFT	VLV O/L VELOCITY
SERVICE CONDITION	1.	40% MCR	16.933	0.2454	0.2	64.1			
	2.	60% MCR	27.856	0.3453	0.2	71.9			
	3.	100% MCR	53.498	0.5346	0.2	82.5			
	4.	VWO	58.309	0.5671	0.2	84.0			
	5	Max	62	0.8	0.25	96.1			
	VALVE TYPE						[] CAVITATION [■] FLASHING [] HIGH DP		
	MAX SHUT OFF PRESS (KG/CM2g) 7 BODY DESIGN : PRESS (KG/CM2g) | TEMP (DEG C) 7/VACUUM | 100 IBR FORM III-C [] REQUIRED [■] NOT REQUIRED						....|.....		
TOTAL WEIGHT (VALVE + ACTUATOR + ACCESSORIES) Kg							.....		

Tag No. ASV-49/ LBG22AA101 Qty.: 1 no. Data Sheet No. PES-145-06-DS1-0
P&ID No.: PE-DG-410-100-N107

DATA SHEET – A & B

DATA SHEET – A FOR CONTROL VALVE (WITH PNEUMATIC ACTUATOR) (TO BE FILLED BY PURCHASER)			DATA SHEET – B (TO BE FILLED UP BY BIDDER)
GENERAL	PROJECT	APGENCO - 1 X 800 MW VIJAYWADA TPS	.....
	SERVICE	CRH TO AUX. STEAM SYSTEM BYPASS LINE	.....
	LOCATION	[■] INDOOR [] OUTDOOR	.....
	DUTY	[] ON/OFF [■] MODULATING	.....
	PIPE SIZE (inlet / outlet)	114.3 x 6.02 | 219.1 x 12.7	.....
	PIPE MATERIAL (inlet / outlet)	SA 106 GR B | SA 106 GR C	.....|.....
BODY	MODEL NO.	BIDDER TO INDICATE	.....
	TYPE OF BODY: GUIDING : NO. OF PORTS	[■] GLOBE [] ANGLE | [] TOP [■] CAGE | ONE	.....|.....|.....|.....
	BODY SIZE: PORT SIZE: DESIGN CV	BIDDER TO INDICATE	.....|.....|.....
	END CONNECTION & RATING (ANSI)	[■] BWE [] SWE [] FLANGED	.....
	BODY MATERIAL	[] A216 WCB [■] A217 WC9 [] SS [] A217 CS	.....
		[] A351 CF8M	.....
	PACKING: MATERIAL SINGLE / DOUBLE	[] PTFE [■] GRAFOIL [] DOUBLE [■] SINGLE	.....|.....
	BONNET TYPE	[] STD [] EXTENDED [] FINNED	.....
	TRIM FORM	[] LINEAR [■] EQ. PERCENTAGE	.....
		[] QUICK OPEN (ON/OFF)	
	TRIM MATERIAL: SEAT | PLUG	SS 410 | SS 410	.....|.....
	: CAGE | GUIDE BUSH	SS 410 | SS 410	.....|.....
	FLOW	BIDDER TO INDICATE (BELOW/ABOVE SEAT)	.....
	OUTLET VELOCITY	[] < 7 M/SEC (WATER) | [■] MAC NO. < 1/3 (STM)	.....
	REQUIRED LEAKAGE CLASS	[] II [] III [] IV [■] V [] VI	.....
	NOISE LEVEL (dBA) (spec. 3.1.14)	LESS THAN 85 dBA	.....
	VACUUM SERVICE	[] YES [■] NO	.....
	ANTI CAVITATION TRIM	[] YES [■] NO	.....
PNEUMATIC ACTUATOR	MODEL NO. & SIZE	BIDDER TO INDICATE	.....|.....
	CLOSE AT : OPEN AT (KG/CM2g)	TO SUIT ACTUATOR (AIR TO OPEN)	.....|.....
	TRAVEL TIME FOR	<10 sec	.....
	OPEN TO CLOSE, CLOSE TO OPEN		.....
	VALVE POSN. ON SIGNAL AIR FAILURE	[] TO OPEN [] STAYPUT [■] TO CLOSE	.....
	VALVE POSN. ON SUPPLY AIR FAILURE	[■] TO CLOSE	.....
ACCESSORIES	POSITIONER	[■] REQUIRED [] NOT REQUIRED	.....
	AIR FILTER REGULATOR	[■] REQUIRED [] NOT REQUIRED	.....
	AIR LOCK RELAY	[■] REQUIRED [] NOT REQUIRED	.....
	POSITION LIMIT SWITCH	[] REQUIRED [■] NOT REQUIRED	.....
	POSITION TRANSMITTER	PART OF POSITIONER	.....
	SOLENOID VALVE	[] REQUIRED [■] NOT REQUIRED	.....
	E/P CONVERTER	PART OF POSITIONER	.....
	JUNCTION BOX	[■] REQUIRED [] NOT REQUIRED	.....
	HAND WHEEL (SIDE MOUNTED)	[■] REQUIRED	.....
	LOCAL POSITION INDICATOR	[■] REQUIRED	.....
	ELECTRO PNEUMATIC POSITIONER	[] REQUIRED [■] NOT REQUIRED	.....

Tag No. ASV-49/ LBG22AA101 Qty.: 1 no. Data Sheet No. PES-145-06-DS1-0
P&ID No.: PE-DG-410-100-N107

DATA SHEET – A & B

DATA SHEET – A FOR CONTROL VALVE (WITH PNEUMATIC ACTUATOR) (TO BE FILLED BY PURCHASER)			DATA SHEET – B (TO BE FILLED UP BY BIDDER)
PERFORMANCE OF VALVE	LINEARITY HYSTERISIS SENSITIVITY ACCURACY (OVERALL)	± 1% ± 0.5% ± 0.5% ± 1%	....

SERVICE CONDITION

SL. No. +	LOAD	FLOW (T/HR)	INLET PR. KG/CM2(A)	OUTLET PR. KG/CM2(A)	TEMP DEG (C)	CALC ULATED CV	% VLV LIFT	VLV O/L VELOCITY
1.	Condition-1	10	24.04	16	350.4			
2.	Condition-2	30	60.61	16	344.7			

VALVE TYPE	[] CAVITATION [] FLASHING [] HIGH DP
MAX SHUT OFF PRESS (KG/CM2g) 74.5 BODY DESIGN : PRESS (KG/CM2g) | TEMP (DEG C) 74.5 | 365 IBR FORM III-C [■] REQUIRED [] NOT REQUIRED	....|..... .....
TOTAL WEIGHT (VALVE + ACTUATOR + ACCESSORIES) Kg	.....

SECTION-C

DATASHEET-A&B FOR ACCESSORIES

FORM NO. PEM-6666-0

	Technical specification for **Control Valves with Accessories** (Pneumatically Operated)	SPECIFICATION NO.:**PE-TS-420-145-I104** DOCUMENT NO.: VOLUME **II-B** SECTION **C** ISSUE NO. 2 REV. NO. 00 DATE: 29.12.16 SHEET 77 OF 116

Tag No.…….. Quantity…….. Data Sheet No. PES-145-06-DS1-1

APPLICABLE FOR TAG Nos.WHEREVER STATEMENT "REQUIRED" INDICATED IN THE INDIVIDUAL CV DATA SHEETS

DATA SHEET – A & B for ACCESSORIES

DATA SHEET – A FOR CONTROL VALVE (WITH PNEUMATIC ACTUATOR) (TO BE FILLED BY PURCHASER)							DATA SHEET – B (TO BE FILLED-UP BY BIDDER)
POSITIONER (SMART)	MFR. & MODEL NUMBER			BIDDER TO INDICATE			
	BYPASS	GAUGES	ENCL. CLASS	■ YES ☐ NO	■ THREE ☐ TWO	■ IP-65	
	INPUT SIGNAL (Kg / Cm^2)			■ 0.2 – 1.0	☐ 0.2 – 0.6	☐ 0.6 – 1.0	
	OUTPUT SIGNAL (Kg / Cm^2)			TO SUIT ACTUATOR			
AIR FILTER REGULATOR	MFR. & MODEL NUMBER			BIDDER TO INDICATE			
	AIR SUPPLY PRESS (Kg / Cm^2 g)			■ 5.0 – 8.0 ☐			
	OUTPUT PRESS (Kg / Cm^2 g)			TO SUIT ACTUATOR			
	FILTER SIZE			5 MICRON			
	OUTPUT GAUGE			■ REQUIRED ☐ NOT REQUIRED			
	AUTO DRAIN FEATURE			■ REQUIRED ☐ NOT REQUIRED			
AIR LOCK	MFR. & MODEL NUMBER			BIDDER TO INDICATE			
	SET PRESS (Kg / Cm^2)			BIDDER TO INDICATE			
	SUPPLY PRESS (Kg / Cm^2)			■ 5.0 – 8.0 ☐			
	RESET TYPE			AUTO			
	VENT PLUG			REQUIRED			
LIMIT SWITCH **(Applicable only for tag nos. CDV-67 & DRV-73)**	MFR. & MODEL NUMBER			BIDDER TO INDICATE			
	OPEN posn	INT posn	CLOSE posn	**1 NO.**	**---**	**1 NO.**	
	CONTACT TYPE			SPDT 2 NO + 2 NC			
	RATING (AC / DC)			5A 240V AC AND 0.2A 220V DC			
	ENCLOSURE CLASS			■ IP 65 ☐			
POSITION TRANSMITTER **(IN BUILT IN SMART POSITIONER)**	MFR. & MODEL NUMBER			■ Electronic (2-Wire) Contactless ☐ OTHER			
	TYPE			BIDDER TO INDICATE			
	SUPPLY			■ 24V DC ☐ 220V DC ☐ 110V AC ☐ 240V AC			
	OUTPUT RATING			■ 4-20mA ☐ 0-100 ohms			
	ACCURACY			± 1% FS			
	ENCLOSURE CLASS			■ IP 65 ☐			
SOLENOID VALVE	MFR. & MODEL NUMBER			BIDDER TO INDICATE			
	RATING			■ 24V DC ☐ 220V DC ☐ 240V AC ☐			
	TYPE			3-WAY (UNIVERSAL OPERATION TYPE)			
	OPERATION	QUANTITY		☐ Stayput ■ Interlock	AS PER HOOK UP DIAGRAM & DATASHEET		
	COIL INSULATION CLASS			CLASS - H			
	ENCLOSURE CLASS			■ IP 65 ☐ NEMA 4 ☐			
HANDWHEEL	ORIENTATION			☐ TOP MOUNTED ■ SIDE MOUNTED			
JUNCTION BOX	NO. OF WAYS			☐ 24-WAYS ☐ AS REQUIRED ■ 36-Ways			
	SIZE			AS REQUIRED			
	CABLE GLANDS (Size / Quantity)			AS REQUIRED (Double Compression Type).			
	ENCLOSURE CLASS			■ IP 65 ☐			
	BODY MATERIAL			■ FRP ☐ SS ☐ METAL SHEET			
I/P CONVERTER **(IN BUILT IN SMART POSITIONER)**	INPUT SIGNAL	POWER SUPPLY		4-20mA DC	24V DC		
	SPLIT RANGE			☐ YES ☐ NO			
	ENCLOSURE CLASS			■ IP 65 ☐			
	LINEARITY			± 0.5%			
	HYSTERISIS			± 0.5%			
SS Tubing & Fittings / per CV	**This is in addition to SS Tubing and fittings which are integral part of CV**			25 Meters of ¼ " SS Tubing, with 1 set of Fittings for each CV for connection to IA Header on one end and accessories on another end of CV.			
PAINTING	**COLOUR/SHADE**			■ RED ☐ GREEN ☐			
	THICKNESS (DFT) – in microns			BIDDER TO INDICATE			
	TYPE			■ EPOXY ☐ ENAMEL ☐			

COMPANY SEAL
NAME
SIGNATURE
DATE

SECTION-C

DATASHEET C

Tag No……. Quantity……

Data Sheet No. PES-145-06-DS2-1

DATA SHEET C

DATA SHEET – C FOR CONTROL VALVE (WITH PNEUMATIC ACTUATOR)
(TO BE FILLED BY THE BIDDER AFTER THE AWARD OF CONTRACT)

GENERAL*	PROJECT	
	SERVICE	
	LOCATION	
	DUTY	
	PIPE SIZE (inlet / outlet)	
	PIPE MATERIAL (inlet / outlet)	
BODY	MODEL NUMBER	
	TYPE OF BODY : GUIDING : NO. OF PORTS	
	BODY SIZE : PORT SIZE : DESIGN CV	
	END CONNECTION & RATING (ANSI)	
	BODY MATERIAL	
	PACKING MATERIAL SINGLE / DOUBLE	
	BONNET TYPE	
	TRIM FORM	
	TRIM MATERIAL : SEAT | PLUG	
	TRIM MATERIAL : CAGE | GUIDE	
	FLOW	
	OUTLET VELOCITY	
	REQUIRED LEAKAGE CLASS	
	NOISE LEVEL (dBA)	
	VACUUM SERVICE	
	ANTI CAVITATION TRIM	
PNEUMATIC ACTUATOR	MODEL NO. & SIZE	
	CLOSE AT : OPEN AT (Kg / Cm^2g)	
	*TRAVEL TIME FOR OPEN TO CLOSE, CLOSE TO OPEN	
	*VALVE POSN. ON SIGNAL AIR FAILURE	
	*VALVE POSN. ON SUPPLY AIR FAILURE	
ACCESSORIES	POSITIONER	
	AIR FILTER REGULATOR	
	AIR LOCK RELAY	
	POSITION LIMIT SWITCH	
	POSITION TRANSMITTER	
	SOLENOID VALVE	
	E / P CONVERTER	
	JUNCTION BOX	
	HAND WHEEL (SIDE MOUNTED)	
	LOCAL POSITION INDICATOR	
	ELECTRO PNEUMATIC POSITIONER	

Tag No……. Quantity…….. Data Sheet No. PES-145-06-DS2-1

DATA SHEET C

DATA SHEET – C FOR CONTROL VALVE (WITH PNEUMATIC ACTUATOR)
(TO BE FILLED BY THE BIDDER AFTER THE AWARD OF CONTRACT)

PERFORMANCE OF VALVE	HYSTERSIS	
	LINEARITY	
	SENSITIVITY	
	ACCURACY (Overall)	

SERVICE CONDITION*	**SL.+ NO.**	**LOAD**	**FLOW (T/HR)**	**INLET PR. (KG/CM^2 (A)**	**OUTLET PR. (KG/CM^2 (A)**	**TEMP DEG. C**	**CALCULATED CV**	**% VALVE LIFT**	**VALVE O/L VELOCITY**

	VALVE TYPE
	* MAX SHUT OFF PRESS (**(KG/CM^{2}g)**
	* BODY DESIGN : PRESS (**(KG/CM^{2}g)** **| TEMP (DEG. C)**
	* IBR FORM III-C

TOTAL WEIGHT (VALVE + ACTUATOR + ACCESSORIES) KG.

SEA WORTHY PACKING

Tag No……. Quantity……. Data Sheet No. PES-145-06-DS2-1

DATA SHEET C FOR ACCESSORIES

DATA SHEET – C FOR CONTROL VALVE (WITH PNEUMATIC ACTUATOR)
(TO BE FILLED BY THE BIDDER AFTER THE AWARD OF CONTRACT)

POSITIONER	MFR. & MODEL NUMBER	
	BYPASS / GAUGES / ENCL. CLASS	
	INPUT SIGNAL (Kg / Cm^2)	
	OUTPUT SIGNAL (Kg / Cm^2)	
AIR FILTER REGULATOR	MFR. & MODEL NUMBER	
	AIR SUPPLY PRESS (Kg / Cm^2 g)	
	OUTPUT PRESS (Kg / Cm^2 g)	
	OUTPUT GAUGE	
	FILTER SIZE	
	AUTO DRAIN FEATURE	
AIR LOCK	MFR. & MODEL NUMBER	
	SET PRESS (Kg / Cm^2)	
	SUPPLY PRESS (Kg / Cm^2)	
	RESET TYPE	
	VENT PLUG	
LIMIT SWITCH	MFR. & MODEL NUMBER	
	OPEN posn / INT posn / CLOSE posn	
	CONTACT TYPE	
	RATING (AC / DC)	
	ENCLOSURE CLASS	
POSITION TRANSMITTER	MFR. & MODEL NUMBER	
	TYPE	
	SUPPLY	
	OUTPUT RATING	
	ACCURACY	
	ENCLOSURE CLASS	
SOLENOID VALVE	MFR. & MODEL NUMBER	
	RATING	
	OPERATION / QUANTITY	
	COIL INSULATION CLASS	
	ENCLOSURE CLASS	
HANDWHEEL	ORIENTATION	
JUNCTION BOX	NO. OF WAYS	
	SIZE	
	CABLE GLANDS (Size / Quantity)	
	ENCLOSURE CLASS	
	BODY MATERIAL	
I/P CONVERTER	INPUT SIGNAL / POWER SUPPLY	
	SPLIT RANGE	
	ENCLOSURE CLASS	
	LINEARITY	
	HYSTERISIS	
SS Tubing & Fittings / per CV	25 Meters of ¼ "SS Tubing, with 1 set of Fittings for each CV for connection to IA Header on one end and accessories on another end of CV.	
PAINTING	**COLOUR/SHADE**	
	THICKNESS (DFT)	
	TYPE	

COMPANY SEAL
NAME
SIGNATURE
DATE

SECTION-C

QUALITY PLAN

PEM :: C&I	QUALITY PLAN FOR CONTROL VALVE (PNEUMATIC)	QUALITY PLAN NO.: **PE-QP-420-145-I 006**
		VOLUME
		SECTION
		REV. NO. 01 DATE: 09.11.2016
		SHEET 2 OF 8

Sl. No.	Component / operation	Characteristics Checked	* Category	Type/Method of Check	Extent of Check	Reference documents	Acceptance Norms	Format of Records	Agency $ P	Agency $ W	Agency $ V	Remarks
1.0	**INCOMING MATERIAL**											
1.1	Body & Bonnet casting / forgings, plug, valve stem, seat ring/cage.	1. Physical, Chemical properties	MA	Physical, Chemical tests	One/ Heat(HT Batch)	Approved drg. / data sheet /	Approved drg. / data sheet /	Test Certificate	3	---	2,1	TC for body/bonnet from foundry only
		2. Heat Treatment	MA	Review of H.T. Chart	Each H.T.	Approved drg. / data sheet /	Approved drg. / data sheet /	Test Certificate	3/2	2	1	1.IBR Certification (if applicable) to be verified by BHEL. 2.Applicable for body /bonnet only
		3. Internal quality of castings	MA	RT for Body & UT for Bonnet	100%	ASME B 16.34	ASME B 16.34	Test Report / FILM	3/2	2	1	Applicable for body and bonnet for rating ANSI 900 and above.
		4. Surface Quality	MA	1. Visual	100%	MSS-SP-55	MSS-SP-55	Test Certificate	3/2	---	2,1	R01
				2. MT/PT	100%	ASME B 16.34	ASME B 16.34	Test Certificate	3	2	1	After Machining on machined surface only
		5. Pressure test for shell	MA	Hyd. Test	100%	ISA-S-75.19/ ASME B 16.34	ISA-S-75.19/ ASME B 16.34	Test Certificate	2	2	1	For Body & Bonnet after machining.
1.2	Diaphragm	1. Surface Quality	MA	Visual	100%	Mfr. standard	Mfr. standard	Test Certificate	3/2	---	2,1	R01

LEGEND:
* CR - Critical characteristics
MA - Major characteristics
MI - Minor characteristics

RT- Radiographic Test
UT – Ultrasonic Test

PT – Dye penetrant Test
MT- Magnetic Test

$ P - Agency Performing the Test.
W - Agency Witnessing the Test.
V - Agency Verifying the Test.

1 - BHEL
2 - Vendor
3 - Sub-vendor
4 - APGENCO/ APGENCO TPIA

R01

Sl. No.	Component / operation	Characteristics Checked	* Category	Type/Method of Check	Extent of Check	Reference documents	Acceptance Norms	Format of Records	Agency $ P	Agency $ W	Agency $ V	Remarks
		2. Hardness	MA	Measurement	100%	Mfr. standard	Mfr. standard	Test Certificate	3/2	---	2,1	R01
		3. Endurance / Life cycle	MA	Cyclic test 10,000 cycles	One / Type	10,000 cycles/ Mfr. standard.	No damage	Test Certificate	3/2	---	2,1	
1.3	Spring	1. Composition	MA	Chemical-Analysis	One sample/ Heat	Material spec. / Mfr. standard	Material spec. / Mfr. standard	Test Certificate	3	---	2,1	R01
		2. Mech. Properties	MA	Mech. Test	One sample/ Heat	Material spec. / Mfr. standard	Material spec. / Mfr. standard	Test Certificate	3	---	2,1	Mech test shall be as per IS standard
		3. Performance	MA	1. Stiffness ratio	100%	Material spec. / Mfr. standard	Material spec. / Mfr. standard	Test Certificate	3	---	2,1	
				2. Scragging	100%	Material spec. / Mfr. standard	Material spec. / Mfr. standard	Test Certificate	3	---	2,1	R01
				3. Cyclic test (Endurance)	One / type	10,000 cycles	Material spec. / Mfr. standard	Test Certificate	3	---	2,1	
				4. Dimension (Measurement)	One sample/ Lot	Mfr. standard	Approved Drawing R01	Record	3	---	2,1	R01
1.4	Electrical items [Limit switches, Solenoids, Position Transmitter(if provided externally)]	1. Routine Test	MA	HV, IR, Continuity function	100%	Relevant Standards	Relevant Standards	Test Certificate	3	---	2,1	In case TC is not available, Actual test shall be conducted.

LEGEND:
* CR - Critical characteristics
MA - Major characteristics
MI - Minor characteristics

RT- Radiographic Test
UT – Ultrasonic Test

PT – Dye penetrant Test
MT- Magnetic Test

$ P - Agency Performing the Test.
W - Agency Witnessing the Test.
V - Agency Verifying the Test.

1 - BHEL
2 - Vendor
3 - Sub-vendor
4 - APGENCO/ APGENCO TPIA

R01

Sl. No.	Component / operation	Characteristics Checked	* Category	Type/Method of Check	Extent of Check	Reference documents	Acceptance Norms	Format of Records	Agency $ P	Agency $ W	Agency $ V	Remarks
		2. Degree of protection	MA	IP/NEMA Tests	One sample / type	Approved Data sheet	Approved Data sheet	Test Certificate	3	---	2,1	
1.5	Pressure Gauges	1. Performance	MA	Review of calibration certificates	100%	Mfr. Standard	Mfr. Standard	Test Certificate	3	---	2,1	R01
		2. Marking	MA	Visual	100%	Mfr. standard	Mfr. standard	Records	3	---	2,1	
2.0	**IN PROCESS INSPECTION**											
2.1	After machining, i, Body ii Bonnet iii Plug iv Valve Stem v seat ring/cage	1. Surface flaws	MA	Visual & MT/PT	100% (on accessible surfaces)	ASME B 16.34	ASME B 16.34	Test Records	2	---	1	Butt weld ends shall be included.
		2. Dimensional checks	MA	Measurement	100%	Mfr. Standard	Mfr. Standard	Records	2	---	1	
		3. Hard facing (wherever applicable)	MA	Hardness Measurement	One sample/Lot	Mfr. Standard	Mfr. Standard	Records	2	---	1	
3.0	**TESTS ON COMPLETED VALVE**											
3.1	Actuator Chamber	Leakage & Strength	MA	Pneumatic test	100%	Mfr. Standard	No Leakage	Test Certificate	2	1	1	Refer Note-4
3.2	Body	Leakage and Pressure test (Body Mount Leakage)	MA	Hydro test	100%	ISA - S-75.19/ ASME B16.34	No Leakage	Test Certificate	2	1	1	Refer Note-4
3.3	Seat leakage test for completed valve	Seat Leakage	MA	Pneumatic Test	100%	FCI-70.2	FCI-70.2	Test Certificate	2	1	1,4 R01	Refer Note-4

LEGEND:
* CR - Critical characteristics
MA - Major characteristics
MI - Minor characteristics

RT- Radiographic Test
UT – Ultrasonic Test

PT – Dye penetrant Test
MT- Magnetic Test

$ P - Agency Performing the Test.
W - Agency Witnessing the Test.
V - Agency Verifying the Test.

1 - BHEL
2 - Vendor
3 - Sub-vendor
4 - APGENCO/ APGENCO TPIA

R01

PEM :: C&I	QUALITY PLAN FOR CONTROL VALVE (PNEUMATIC)	QUALITY PLAN NO.: **PE-QP-420-145-I 006**
		VOLUME
		SECTION
		REV. NO. 01 DATE: 09.11.2016
		SHEET 5 OF 8

Sl. No.	Component / operation	Characteristics Checked	* Category	Type/Method of Check	Extent of Check	Reference documents	Acceptance Norms	Format of Records	Agency $ P	Agency $ W	Agency $ V	Remarks
4.0	**OPERATION TEST ON COMPLETED VALVE (Final inspection)**	1. Valve Travel	MA	Measurement	100%	Mfr. Procedure	Approved drg. / data sheet	Test Report	2	1	1,4	Refer Note-4
		2. Opening/Closing time	MA	Measurement	100%	Mfr. Procedure	Approved drg. / data sheet	Test Report	2	1	1,4 R01	Refer Note-4
		3. Linearity/cam characteristic	MA	Measurement	100%	Mfr. Procedure	Approved drg. / data sheet	Test Report	2	1	1,4	Refer Note-4
		4. Repeatability	MA	Measurement	100%	Mfr. Procedure	Approved drg. / data sheet	Test Report	2	1	1,4	Refer Note-4
		5. Hysteresis	MA	Measurement	100%	Mfr. Procedure	Approved drg. / data sheet	Test Report	2	1	1,4 R01	Refer Note-4
		6. Sensitivity	MA	Measurement	100%	Mfr. Procedure	Approved drg. / data sheet	Test Report	2	1	1,4	Refer Note-4
		7. Accuracy (Overall)	MA	Measurement	100%	Mfr. Procedure	Approved drg. / data sheet	Test Report	2	1	1,4	Refer Note-4
		8. Control Valve characteristics / CV Test	MA	♦Measurement (Press. vs. discharge and discharge vs. opening 0-100% in steps of 10%)	One per type	Mfr. Procedure	Approved drg. / data sheet	Test Certificate	2	--	1,4 R01	♦Size = Body & port size Or Body size & CV for non std port. Refer Note 1.
		9. Operation of limit switch & solenoids and other accessories	MA	Function	100%	Mfr. Procedure	Approved drg./ data sheet	Test Report	2	1	1,4 R01	On assembled valve Refer Note-4
		10. Overall dimensions	MI	Visual and dimensional	100%	Approved drg. / data sheet	Approved drg./ data sheet	Records	2	1	1,4	Refer Note-4

LEGEND:
* CR - Critical characteristics
MA - Major characteristics
MI - Minor characteristics

RT- Radiographic Test
UT – Ultrasonic Test

PT – Dye penetrant Test
MT- Magnetic Test

$ P - Agency Performing the Test.
W - Agency Witnessing the Test.
V - Agency Verifying the Test.

1 - BHEL
2 - Vendor
3 - Sub-vendor
4 - APGENCO/ APGENCO TPIA

R01

Sl. No.	Component / operation	Characteristics Checked	* Category	Type/Method of Check	Extent of Check	Reference documents	Acceptance Norms	Format of Records	Agency $ P	Agency $ W	Agency $ V	Remarks
		11. Pre defined valve position in case of air failure	MA	Visual	100%	Approved drg. / data sheet	Approved drg. / data sheet	Test Certificate	2	1	1,4	R01
		12. Cleanliness, painting, stamping (for direction of flow), Tag No.	MA	Visual and dimensional, paint thickness	100%	Mfr. Procedure	Approved drg./ data sheet	Test Certificate	2	1	1	
		13. Surface Quality	MA	Visual	100%	MSS-SP-55	MSS-SP-55	Test Certificate	3/2	---	2,1	
5.0	**AUXILIARY ITEMS (Performance test of auxiliary items shall be performed on the completely assembled valve)**											
5.1	Positioner	Overall leakage after assembly including Nozzles leakage	MA	Leak Test (in the steady state input signal)	100 %	Mfr. Standard	No leakage	Test Certificate	3/2	---	---	Certificate of Conformance (C.O.C)
5.2	Air filter regulator	1. Normal air consumption	MA	Measurement	Each type	Mfr. Standard	No leakage	Test Certificate	3/2	---	---	(C.O.C)
		2. Overall leakage	MA	Visual (soap solution)	100 %	Mfr. Standard	No leakage	Test Certificate	3/2	---	---	(C.O.C)
5.3	Air lock relay	Performance Test	MA	Leakage test	100%	Mfr. Standard	No leakage	Test Certificate	3/2	---	---	(C.O.C)
5.4	Electronic position transmitter(not applicable if provided integral to smart positioner)	1. Accuracy	MA	Operation	100%	Approved data sheet /	Approved data sheet /	Test Certificate	2	1	---	(C.O.C)
5.5	Current to Pneumatic converter(not applicable for smart positioner)	1. Physical Verification Make/Model	MA	Visual	100%	Approved drg. / data sheet	Approved drg. / data sheet	Test Certificate	2	---	---	(C.O.C)

LEGEND:
* CR - Critical characteristics
MA - Major characteristics
MI - Minor characteristics

RT- Radiographic Test
UT – Ultrasonic Test

PT – Dye penetrant Test
MT- Magnetic Test

$ P - Agency Performing the Test.
W - Agency Witnessing the Test.
V - Agency Verifying the Test.

1 - BHEL
2 - Vendor
3 - Sub-vendor
4 - APGENCO/ APGENCO TPIA

R01

Sl. No.	Component / operation	Characteristics Checked	* Category	Type/Method of Check	Extent of Check	Reference documents	Acceptance Norms	Format of Records	Agency $ P	Agency $ W	Agency $ V	Remarks
		2. Degree of Protection	MA	IP/NEMA test	Each type	Relevant Standard	Relevant Standard	Test Certificate	3	---	---	(C.O.C)
		3. Linearity	CR	Measurement	100%	Approved drg. / data sheet /	Approved drg. / data sheet /	Inspection Report	2	---	---	(C.O.C)
		4. Hysterisis	CR	Measurement	100%	Approved drg. / data sheet /	Approved drg. / data sheet /	Inspection Report	2	---	---	(C.O.C)
5.6	Smart Positioner (As Applicable)	1. Physical Verification Make/Model	MA	Visual	100%	Approved drg. / data sheet	Approved drg. / data sheet	Test Certificate	2	---	---	(C.O.C)
		2. Degree of Protection	MA	IP/NEMA test	Each type	Relevant Standard	Relevant Standard	Test Certificate	3	---	---	(C.O.C)
		3. Linearity	CR	Measurement	100%	Approved drg. / data sheet /	Approved drg. / data sheet /	Inspection Report	2	---	---	(C.O.C)
		4. Hysterisis	CR	Measurement	100%	Approved drg. / data sheet /	Approved drg. / data sheet /	Inspection Report	2	---	---	(C.O.C)
		5. Calibration with Hand Held Communicator	MA	Measurement	Each type	Mfr. Standard	Mfr. Standard	Test Certificate	2	---	---	(C.O.C)
6.0	**PAINTING**	Soundness of Painting	MA	Visual and Measurement	100%	Mfr. Standard	Mfr. Standard	Inspection Report	2	---	---	Refer Note-2
7.0	**PACKING**	Soundness of Packing against transit damage	MA	Visual	100%	Mfr. Standard	Mfr. Standard	Inspection Report	2	---	---	Refer Note-3

Sl. No.	Component / operation	Characteristics Checked	* Cate gory	Type/Method of Check	Extent of Check	Reference documents	Acceptance Norms	Format of Records	Agency $			Remarks
									P	W	V	

NOTES:

1. CV test shall be conducted at FCRI/Any govt. approved laboratory/ BHEL approved Laboratory. R01
2. In the absence of BHEL spec. for painting, vendor to obtain BHEL's approval on their painting specification / procedure.
3. Sea worthy packing shall be provided, if called for in the Data sheets.
4. The quantum of check shall be 100% for manufacturer and 10% for BHEL/BHEL nominated inspection agency.
5. IBR certificates in Form III-C shall be submitted if called for in the specification/datasheet.
6. Copies of all TC's(Test Certificates) for materials duly correlated with Heat Nos., TC's for electrical items and mechanical tests(Leak/Operation), C.O.C's(Certificates of Conformance) shall be submitted to BHEL for verification and acceptance.

SECTION – C

BILL OF QUANTITY-MAIN SUPPLY

BILL OF QUANTITY-MAIN SUPPLY

[A] CONTROL VALVES COMPLETE WITH SMART POSITIONER AND ALL ACCESSORIES MOUNTED, TUBED AND TERMINATED ON JB

Sl. No.	TAG NO.	SERVICE/ ITEM DESCRIPTION	TOTAL QTY FOR STATION
1	ASV-8	D/A PEGGING FROM AUX. STEAM HEADER	1NO.
2	CRHV-6	D/A PEGGING FROM CRH LINE	1NO.
3	CDV-22/25	MAIN CONDENSATE CONTROL	2NO.
4	CDV-40	GSC MIN. FLOW RECIRCULATION	1NO.
5	CDV-46	EXCESS RETURN TO CST	1NO.
6	CDV-67	CONDENSATE SPRAY TO FLASH TANK-B	1NO.
7	CDV-72	CONDENSATE FOR VALVE GLAND SEALING	1NO.
8	DRV-14/20	HPH-7A/7B NORMAL DRAIN TO HPH-6A/6B	2NO.
9	DRV-17/23	HPH-7A/7B ALT. DRAIN TO F/T-A	2NO.
10	DRV-27/34	HPH-6A/6B NORMAL DRAIN TO DEAERATOR	2NO.
11	DRV-30/37	HPH-6A/6B ALT. DRAIN TO F/T-A	2NO.
12	DRV-58	LPH-3 ALT. DRAIN TO F/T-B	1NO.
13	DRV-73	DEAERATOR OVERFLOW TO F/T-B	1NO.
14	DRV-2/8	HPH-8A/8B NORMAL DRAIN TO HPH-7A/7B	2NO.
15	DRV-5/11	HPH-8A/8B ALT. DRAIN TO F/T-A	2NO.
16	DRV-40	LPH-4 NORMAL DRAIN TO LPH-2	1NO.
17	DRV-43	LPH-4 ALT. DRAIN TO F/T-B	1NO.
18	DMV-2	DM NORMAL MU TO HOTWELL	1NO.
19	DMV-5	DM EMERGENCY MU TO HOTWELL	1NO.
20	FDV-8	LOW LOAD FEED CONTROL	1NO.
21	DRV-52	DRIP PUMP DISCHARGE CONTROL	1NO.
22	DRV-78	LPH-2A&2B NORMAL DRAIN TO DC-1	1NO.
23	DRV-81	LPH-2A&2B ALT. DRAIN TO F/T-B	1NO.
24	ASV-49	CRH TO AUX STEAM BYPASS LINE	1NO.
[B]	**¼" SS TUBING (To be supplied Loose)**		775 MTR
[C]	**FITTINGS: (To be supplied Loose)**	**(i)** SS FITTING for Connection to Air Filter Regulator	1 LOT
		(ii) SS FITTING for Connection to Air Lock Relay	1 LOT
		(iii) SS FITTING for Connection to IA Header isolation valve	1 LOT
		(iv) SS EQUAL TEE	1 LOT
		(v) ½" NPT (M) X I/4" OD TUBE CONNECTOR	1 LOT
[D]	**ADVANCE DIAGNOSTIC FEATURES SOFTWARE (FOR ALL TAGS)**		1NO.
[E]	**UNIVERSAL HAND HELD CALIBRATOR**		1NO.
[F]	**PERSONAL COMPUTER (PC)**		1NO.
[G]	**COMPUTER TABLE**		1NO.
[H]	**COMPUTER CHAIR**		1NO.

SECTION – C

BILL OF QUANTITY-SPARES

BILL OF QUANTITY-SPARES

LIST OF COMMISSIONING SPARES

Sl. No.	ITEM DESCRIPTION	QUANTITY FOR STATION
1.	GASKETS	1 SET WITH EACH CONTROL VALVE TAG
2.	GLAND PACKINGS	1 SET WITH EACH CONTROL VALVE TAG

MANDATORY SPARES LIST

Sr. No.	ITEM DESCRIPTION	QUANTITIES FOR STATION	REMARKS
1.	Pilot Relay	1 set for each valve	
2.	Actuator Diaphragm	1 no. for each valve	
3.	Feedback Linkage	1 no. for each valve	
4.	Smart Positioners	10% of total quantity of each model/type	
5.	I/P Converters (If any)	10% of total quantity or minimum 15 nos.	
6.	Complete Consumables for Valve Viz. O-ring, Gland Packing, Packing Ring, Bonnet Seal etc.	1 Sets each size, rating, type	
7.	Valve Disc	2 Sets each size, rating, type	
8.	Valve Spindle	2 Sets each size, rating, type	
9.	Valve Seat	2 Sets each size, rating, type	
10.	Bush	2 Sets each size, rating, type	
11.	Guide	2 Sets each size, rating, type	
12.	Guide Bush	2 Sets each size, rating, type	
13.	Coupling Nut	2 Sets each size, rating, type	
14.	Actuator Piston with Rod & Seal	2 Sets each size, rating, type	
15.	Control valve stem packing and spare operator moulded rubber diaphragms	1 set for each size, rating, type	
16.	Valve trim (including cage, plug, stem, seat rings, guide bushings etc.) for each of the control valve as offered.	1 set for each size, rating, type	

17.	Solenoid valves, position transmitters, limit switches, I/P convertors, positioners etc of each type		
17a.	Solenoid valves	10% of total quantity spare with minimum 1 no. for each size, rating, type	
17b.	Position Transmitters	10% of total quantity spare with minimum 1 no. for each size, rating, type	
17c.	Limit Switches	10% of total quantity spare with minimum 1 no. for each size, rating, type	
17d.	I/P convertors	10% of total quantity spare with minimum 1 no. for each size, rating, type	
17e.	Positioners	10% of total quantity spare with minimum 1 no. for each size, rating, type	

MANDATORY SPARES LIST FOR FEED CONTROL VALVE

Sr. No.	ITEM DESCRIPTION	QUANTITIES FOR STATION	REMARKS
1.	Bonnet	50% of total quantity used	

SECTION – D

- **EQUIPMENT SPECIFICATION (PES-145-06)**
- **SPECIFICATION FOR SMART POSITIONER (PES-145-06A)**
- **HOOK-UP DIAGRAM(PES-145-06B)**
- **GUIDELINES FOR PACKING(PES-145-06C)**
- **SPECIFICATION FOR ELECTRIC ACTUATOR (PES-145-06D)**
- **SUB-VENDOR LIST**

SECTION-D

EQUIPMENT SPECIFICATION
(PES-145-06)

1.0 SCOPE

1.1 This specification covers the Design, Manufacture, Inspection and Testing at the manufacturer's works, proper packing for transportation and delivery to site of Control valve (with Pneumatic/Electric Actuator as identified in the datasheet-A) for use in Utility/Captive Power Station/Combined Cycle Station.

1.2 Expander/Reducer between valve body & pipe shall be in BHEL's scope of supply. However, any other expander/reducer required shall be in bidder's scope of supply.

2.0 CODES AND STANDARDS

2.1 As a minimum requirement, the latest revision/version of the following (or equivalent) standards shall be complied as a minimum requirement :-

Indian Boiler Regulation (IBR)

Allowable Seat leakage	:	FCI-70.2
Pressure & Temperature ratings	:	ANSI-B16.34
Enclosure class	:	IEC-144 / NEMA / IS-13947
Control Valves Sizing	:	ISA S-75
Electric Motor operated Actuators	:	IS-9334

3.0 TECHNICAL REQUIREMENTS

The Control valve, Actuator and the accessories shall be suitable for continuous operation under an ambient temperature of 0-60°C and Relative Humidity of 0-95% unless specified otherwise in volume IIB Section-B or Section-C.

3.1 **Control Valve**

The control valve shall be suitably designed for the process operating conditions and system characteristics as specified in the Data Sheet-A.

3.1.1 The control valve shall be of globe/angle body design, as per datasheet, with single port. Valve trim shall be cage guided balanced type for valve sizes ≥ 3" and above. The valve trim shall be suitable for quick replacement without any cutting or welding. Anti-cavitation trims shall be provided for valves with cavitation service and hardened trims for flashing services.

3.1.2 The trim material and body material has been specified in the Datasheet-A. Bidder to offer body material and trim material combination as per the datasheet. Wherever there is a deviation from the datasheets, bidder to furnish the documentary proof for confirming superior trim material/body material selection along with their offer. BHEL/Customer reserves the right to accept/reject any variation in the specification.

3.1.3 Asbestos shall not be used for the packing or any other component.

3.1.4 The valve bonnet and packing shall be suitable for the service conditions as in Data Sheet-A. Gland sealed type bonnets are not acceptable. Double packing is mandatory for applications involving vacuum service. For valves where downstream is subjected to vacuum, flow action shall be "flow to close" (over the seat). Bonnets having Teflon packing shall have valve stem finished to 2-4 microns. Packing material requiring lubrication will not be acceptable.

Type of bonnet shall be according to the service condition. Extension bonnets shall be provided when the maximum temperature of the flowing fluid is greater than 280 or unless otherwise specified.
Cast Steel (CS) yokes shall be offered for CEP Minimum Recirculation valve/GSC minimum recirculation control valve. Cast Iron (CI) yokes are not acceptable for this service.

3.1.5 The valve end connection as specified in Data Sheet-A shall conform to ANSI B16.25 for Butt Weld connection, ANSI B16.11 for Socket Weld connection and ANSI B16.5 for flanged ends. Tolerances on end to end, center to center, center to face shall be in accordance with ASME B16.10. The end connections shall be Socket Welded for sizes up to 50 NB and Butt Welded for sizes above 50 NB.

3.1.6 The valve seat leakage shall be as per FCI-70.2. The leakage class shall be as per Data Sheet-A.

3.1.7 The valve body shall have the direction of flow embossed on all valves.

3.1.8 The sizing shall conform to the requirements of ISA S75.01, and the valve capacity shall be selected so as to meet the following:

Valve with Linear Characteristic	-	Normal Flow (Design Point)	:	70-75% valve lift.
	-	Max. Flow	:	90% valve lift.
	-	Min. Flow	:	>10% valve lift.
Valve with Equipercentage Characteristic	-	Normal Flow (Design Point)	:	75-85% valve lift.
	-	Max. Flow	:	90% valve lift.
	-	Min. Flow	:	>10% valve lift.
ON/OFF Quick open Characteristic	-	1.1 times the CV calculated on the basis of maximum flow condition.		

The valve offered shall be capable of handling 120 % of the required maximum flow.

3.1.9 Calculation for valve sizing, velocity and noise shall be subject to purchaser's approval during contract stage. However responsibility of proper selection and design for the duties specified lies with the vendor. Any modifications required to be done on the valves or actuators & accessories to achieve satisfactory performance of the control system shall be done without any commercial & delivery implication.

3.1.10 The valve outlet velocities shall be limited to the following values, unless otherwise specified in the Data sheet-A.

i)	Liquid service	<=	8 m/sec
ii)	Steam service	<=	150 m/sec
iii)	Flashing service	<=	50% of sonic velocity for flashing services.

3.1.11 For flashing duty, trim design shall be such that the vapour bubbles are kept away from valve body.

3.1.12 For cavitation service, the trim design shall be of multistage pressure drop type, so as to avoid cavitation altogether, instead of keeping cavitation away from valve parts.

3.1.13 The equivalent weighted sound level measured at 1.5 metre above floor level in elevation and 1 metre horizontally from the control valve expressed in decibels to a reference of 0.0002 microbar shall not exceed 85 dBA (without pipe insulation).The offer shall include noise prediction calculations for each valve.

3.1.14 In case of predicted noise level above 85 dBA, same shall be brought down to acceptable noise level i.e. below 85 dBA through Source treatment (proper valve trim & valve body selection). Path treatment (LNP/ Diffuser/ Cartridge/ Silencer etc.), if any shall be subject to Customer's/Owner's approval.

3.1.15 In case of wrong selection/mal operation of valve and for associated actuator during guarantee period, the vendor shall replace the valve suitably with a modified/new valve of design as approved by purchaser and all the expenses for replacement, rectification/modification including transportation both ways will be at vendor's expenses.

3.2 **ACTUATORS-** The control valves shall be operated either pneumatically (with pneumatic actuator) or electrically (with electric actuator).
For pneumatic actuator, clause nos. 3.2.1 through 3.2.6 to be followed.

For electric actuator, please refer the technical specification for electric actuator (Refer Document No. PES-145-06D).

3.2.1 **Pneumatic Actuator**

The actuator shall be designed for a thrust of 120% of valve's shut-off pressure at an airline supply pressure of 5 Kg/Sq. cm.

The pneumatic actuators shall be employed for modulating or open/close duty, as specified in Data Sheet-A. The bidder shall be responsible for proper selection and sizing of valve actuators in accordance with the pressure drops, shut off pressure and valve travel.
The pneumatic spring opposed diaphragm actuator or piston actuator as the case may be for modulating duty shall be capable of positioning the associated valve at desired opening for all the operating conditions specified.

3.2.2 The pneumatic actuator for open/close duty shall be suitable for fast opening/closing of the associated valve.

3.2.3 The actuator design shall allow valve assembly to be mounted at 45° inclination on either side in the vertical plane.

3.2.4 The actuators shall be suitably sized to ensure that the associated valve travel time from full open to full closed position and vice versa is less than 10 seconds or as specified in the datasheet under the most stringent service conditions.

3.2.5 The actuator's hand wheel shall have OPEN & CLOSE direction marking and clockwise rotation as viewed from front shall close the valve.

3.2.6 Each actuator shall be provided with a mechanical pointer attached to stem, moving over a graduated scale with markings, for OPEN, 25%, 50%, 75%, CLOSE positions.

3.3 **Accessories for Control valve with Pneumatic Actuator**

The bidder shall offer all the accessories as specified in the Data Sheet - A for the Pneumatic Actuators under modulating or OPEN/CLOSE duty. The accessories specified shall be supplied duly mounted on the valve actuator and piped with PVC covered copper/ SS tube and flare-less brass/ SS fittings etc. as per the hook up diagram (Refer drawing no. PES-145

3.4 **Painting** of the control valve assembly shall be as per the Painting Specification attached elsewhere in this technical specification. In the absence of specification for painting, vendor to submit their standard painting procedure for painting for BHEL's approval. Epoxy based paint (corrosion-resistant) to be provided for control valves for coastal environment.

3.5 **Sub-vendor list** –

The sub-vendors shall be as per the list enclosed elsewhere in this specification. In case the bidder proposes sub-vendors other than those listed in the specification, the same shall be subject to BHEL's/Customer's approval.

4.0 TESTING AND INSPECTION

4.1 The testing and inspection of the equipment/items shall be in line with the approved QAP

4.2 The cost of all tests as per the approved QAP will be deemed to have been included in the bid.

4.3 In case, the bidder is supplying the valve from outside India, the third party inspection shall be arranged and considered by the bidder in their offer.

5.0 SPARES AND CONSUMABLES

5.1 **Start-up/Commissioning Spares**

The bidder shall supply all the start-up/commissioning spares as per the BOQ given in the technical specification.

5.2 **Mandatory Spares**

The bidder shall supply all the mandatory spares as per the BOQ given in the technical specification.

6.0 DRAWINGS AND DOCUMENTS

6.1 The bidder shall furnish the following documents along with the bid: 4 Sets

6.1.1 Data sheet-B, completely filled-up along with all enclosures.

6.1.2 Schedule of prices in attached format (VOL.-III).

6.1.3 Quality Plan duly signed & stamped.

6.1.4 All relevant Catalogs with detailed technical information.

6.2 **The successful bidder shall furnish the following documents to BHEL during the contract stage viz. after the award of contract**:

5 sets of the following documents for approval + 2 sets of CDs:

6.2.1 CONTROL VALVE DOCUMENTS (Drg. No. PE-VO-XXX-145-I004) including the following:-

(a) Assembly (dimensional) drawings.

(b) Valve Edge preparation details.

(c) Data sheet-C completely filled-up.

(d) Hook-up diagram of Control Valve with Actuator & Accessories.

(e) Valve & Actuator assembly dimensional drawings with weights.

(f) All calculations like CV, Noise Level, Valve Outlet Velocity, Actuator sizing etc.

(g) All relevant catalogues for models of the valves as well as accessories finalized.

6.2.2 QUALITY PLAN (Drg. No. PE-QP-XXX-145-I006) duly signed and stamped.

6.3 **Final documentation:**

Documents / drawings to be furnished by the successful bidder shall be as follows:
15 sets with 6 CD–ROMS of:-

6.3.1 Category I & IV approved CONTROL VALVE DOCUMENTS
6.3.2 Test certificates
6.3.3 Operation & maintenance manuals for Control Valve, Actuator and all accessories

7.0 MARKING AND PACKING

7.1 Marking

A stainless steel metal nameplate should be permanently fixed on each equipment giving its tag number and technical specifications.

7.2 Packing

All equipment / materials shall be suitably packed and protected for the entire period of dispatch, storage and erection against impact, abrasion, corrosion, incidental damage due to vermin, sunlight, high temperature, rain, moisture, humidity, dust, sea water spray (where applicable) as well as rough handling and delays in transit and storage in open. Guidelines for packing are enclosed (Refer specification no. PES-145-06C).

8.0 APPLICABLE DATA SHEET FORMS

This document shall be read with one or more of the following data sheet forms:

- Data sheet A&B for Control Valve with Pneumatic Actuator : Data sheet no. PES-145-06-DS1-1
- Data sheet C for Control Valve with Pneumatic Actuator : Data sheet no. PES-145-06-DS2-1
- Data sheet A&B for Control Valve with Electric Actuator : Data sheet no. PES-145-06-DS3-1
- Data sheet C for Control Valve with Electric Actuator : Data sheet no. PES-145-06-DS4-1

SECTION-D

SPECIFICATION FOR SMART POSITIONER (PES-145-06A)

1.0 Electrical

Input Signal	4-20mA
Power Supply	Loop Powered from the output card of Control System (12-30 V DC)
Hart Protocol	Compatibility For Remote Calibration & Diagnostic (Super-Imposed HART Signal On Input Signal (4-20mA)
Valve Position Feedback (4-20mA)	Position Sensing 4-20mA O/P Signal For Control System To Be Provided. If non contact type of Position feedback signal is required, Position transmitter to be separately provided.

2.0 Environment

Operating Temperature	(-) 30 To 80 Deg.C
Humidity	0-95%
Protection Class	IP-65 (Minimum)

3.0 Software For Configuration & Diagnostic

Software	Windows Based Software, Software Shall Meet The Requirement For Configuration, Diagnostics, Calibration And Testing Of the Actuator. Valve positioning timing, actuator leakage, and Valve Wear & tear, fault alarm to be offered as a minimum. Easily up gradable with same hardware and compatible with any HART management systems /AMS.
Diagnostic/Test Features (Optional)	Advanced Diagnostic Features Like Stroke On Line Partial Closure Test, Valve Signature Analysis (Online graphical representation), Step Response Test, Valve Friction/Jamming Detection Etc To Be Provided.

		Factory Valve Signature Tests Reports (Pr Vs Valve Travel And Travel Vs I/P Signal) Are To Be Provided.
Hardware	PC	For Configuration/Software (OPTIONAL)
Test Certificates		Test Certificates As Per Manufacture Standard/Relevant Standard Are To Be Submitted.

Configuration / Remote Calibration, Auto & Manual Calibration Shall Be Possible.

4.0 Modes

Valve Action	Direct & Reverse, Valve Action. (Same positioner for Single Acting or Double Acting And no separate relays required for changing from Single acting to double).
Flow Characterization	Possible to fit valve characteristic curve linear & Equal percentage
Fail Safe/Fail Freeze (Optional)	Fail Safe/Fail Freeze feature is to be provided.

5.0 Performance

Characteristic Deviation	<=0.75% of span
Ambient temp effect	<=0.01%/Deg C or better.
Dead Band	Adjustable 0.1 to 10%.
Scan Time	10ms
Resolution	<=0.05%
Sensitivity/Linearity	0.3-0.4% of FS
Repeatability	0.32% of FS
Auto-Tune	Yes

Leak Test	Yes

7.0 EMC & CE compliance

Required International Standard Like EN/IEC.	To En50081-2&En50082 or equivalent

8.0 Accessories

In Built Operator Panel	Display With Push Buttons For Configuration And Display On The Positioner Itself
Hand Held Hart Calibrator (Optional)	Universal Hart Calibrator To Be Provided, One Per Unit.
Press Gauge Block	For Supply & Output Pr., Filter Regulator Other Accessories Shall Be Provided As On Required Basis For Making System Complete.
Electrical cable entry	½-Npt, side or bottom entry to avoid water Ingress.

SECTION-D

HOOK-UP DIAGRAM (PES-145-06B)

CONTROL VALVE HOOK-UP DIAGRAM
(WITH SMART POSITIONER)

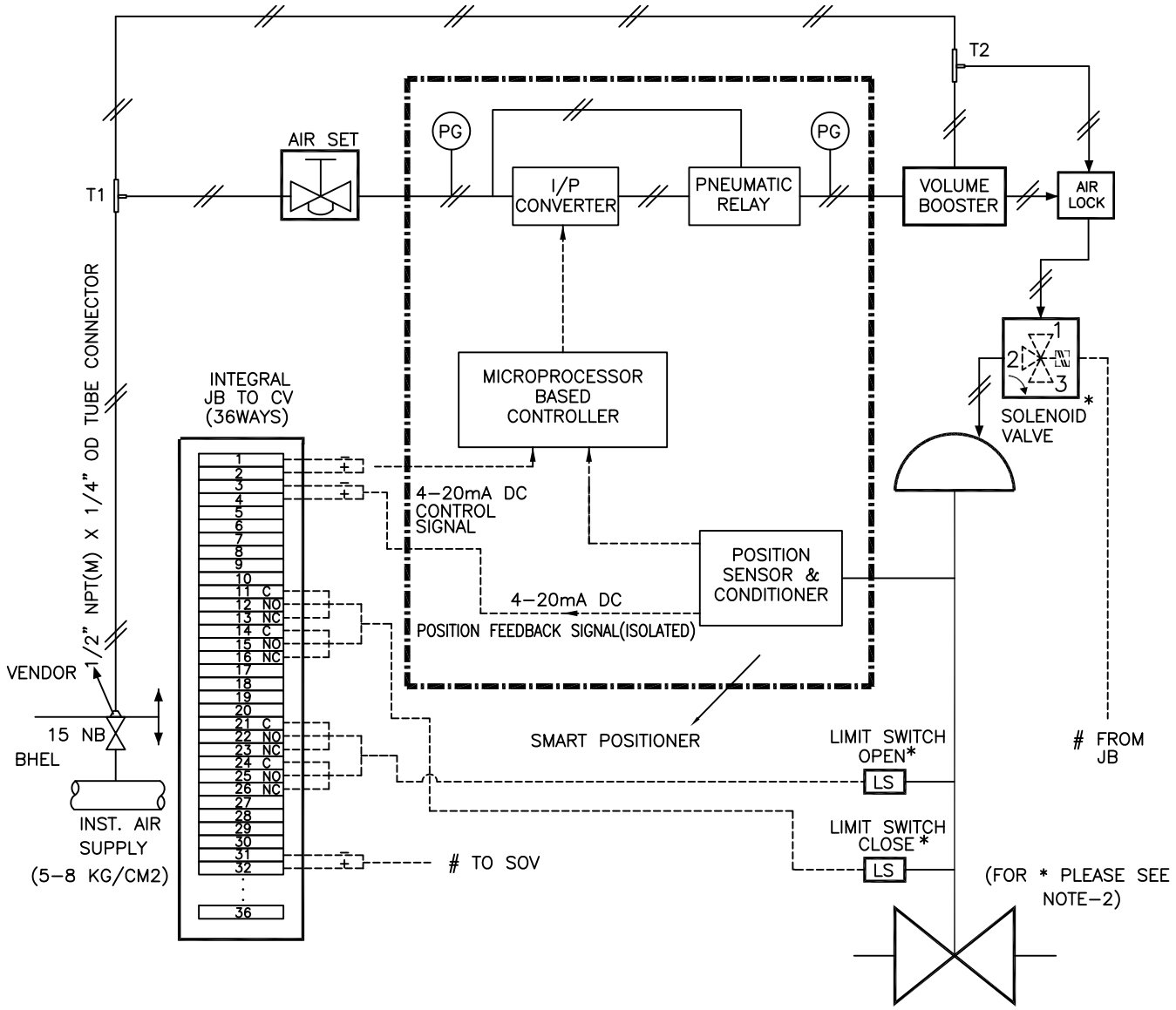

NOTES :-

1. POSITION OF EACH VALVE ON SUPPLY AIR FAILURE / ELECTRICAL SIGNAL FAILURE SHALL BE AS PER SPECIFICATION / DATA SHEET.
2. SOLENOID VALVE & LIMIT SWITCHES WILL BE PROVIDED ONLY FOR CONTROL VALVES IF INDICATED IN RESPECTIVE DATA SHEETS.
3. SOLENOID VALVES PORTS CONDITION:
   PORT 1 AND 2 SHALL BE CONNECTED UNDER DE-ENERGISED CONDITION.
   PORT 2 AND 3 SHALL BE CONNECTED UNDER ENERGISED CONDITION.
4. PRESSURE GAUGES REQUIRED FOR AIR SUPPLY & OUTPUT(S).
5. MOUNTING ACCESSORIES AS REQUIRED.
6. POSITION FEEDBACK SIGNAL SHALL BE 2 WIRE 4-20mA ISOLATED SIGNAL.
7. JB TERMINALS SHALL BE CAGE CLAMP TYPE SUITABLE FOR 2.5 SQ. MM COPPER WIRE. EXTERNAL CONNECTION, OF PLUG IN TYPE OR THROUGH CABLE GLAND, SHALL BE AS PER DATA SHEET
8. ALL APPLICABLE ACCESSORIES SHALL BE PROVIDED AS INDICATED IN THE INDIVIDUAL CONTROL VALVE DATA SHEET / ACCESSORIES DATA SHEET.
9. 25 METERS 1/4" SS TUBING (AS PER ACCESSORIES DATA SHEET) & 1 SET OF SS FITTINGS TO BE SUPPLIED FOR EACH CONTROL VALVE FOR CONNECTION TO ISO VLV AT INST AIR HEADER ON ONE END AND TO AIR LOCK RELAY/AIR FILTER REGULATOR ON THE OTHER END. ALL THE SS FITTINGS SHALL BE DOUBLE COMPRESSION TYPE.
10. VOLUME BOOSTER (ALONG WITH TEE-T2 AND RELATED TUBING & CONNECTORS) SHALL BE PROVIDED IF REQUIRED. AIR CONNECTION TO VOLUME BOOSTER FROM TEE-T2 SHALL BE PROVIDED.

BHEL	1X800 MW APPDCL KRISHNAPATTANAM STAGE-II	DRG. No.	PE-TS-420-145-I104		
	TITLE:- CONTROL VALVE HOOK-UP DIAGRAM	REV. No.	00	DATE	29.12.16
		SHEET	107	OF	116

CONTROL VALVE HOOK-UP DIAGRAM
(FOR ON / OFF TYPE)

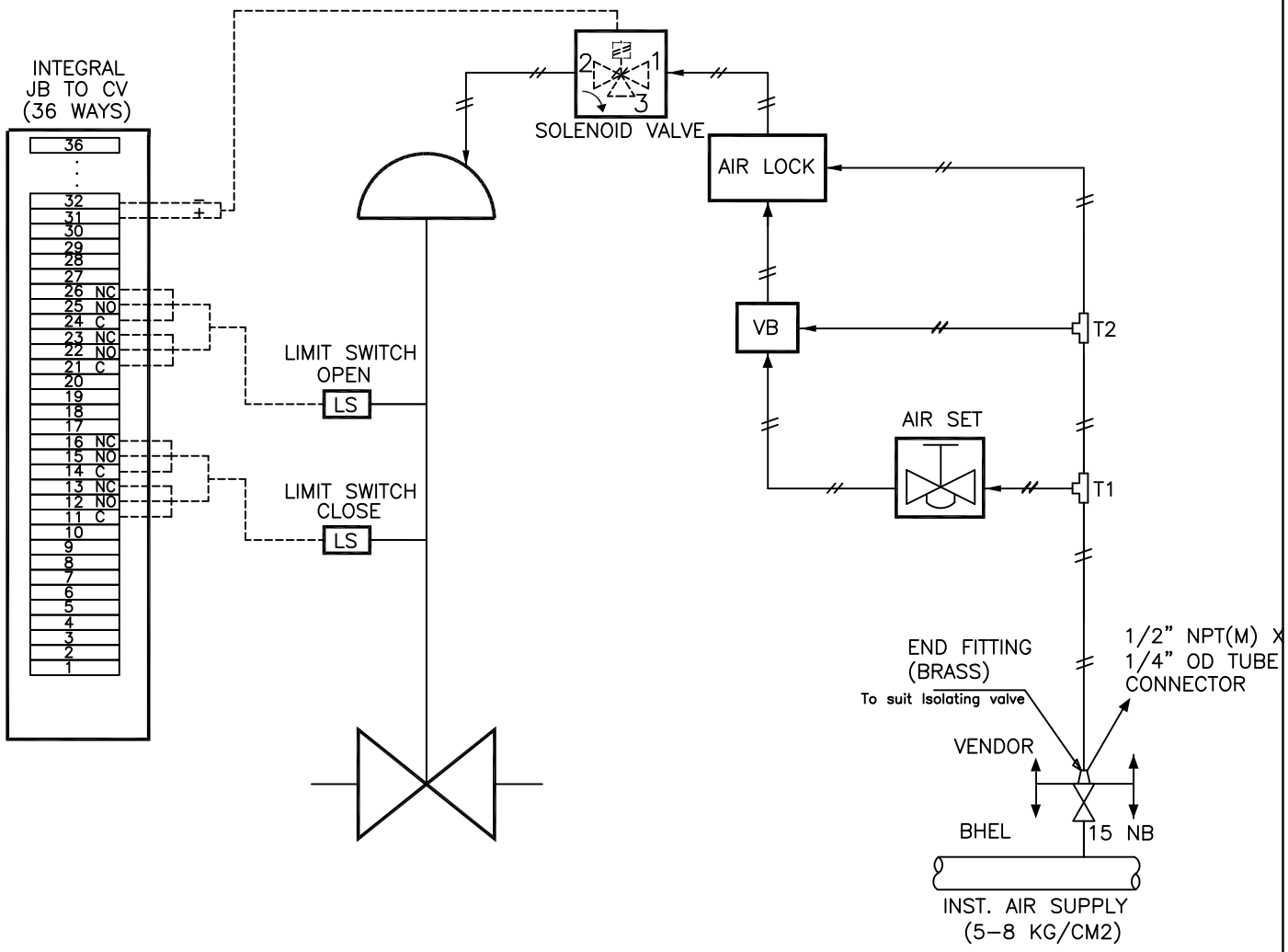

NOTES :-

1. POSITION OF EACH VALVE ON SUPPLY AIR FAILURE / ELECTRIC SIGNAL FAILURE SHALL BE AS PER SPECIFICATION / DATA SHEET.
2. SOLENOID VALVES PORTS CONDITION:
   PORT 1 AND 2 SHALL BE CONNECTED UNDER DE-ENERGISED CONDITION.
   PORT 2 AND 3 SHALL BE CONNECTED UNDER ENERGISED CONDITION.
3. MOUNTING ACCESSORIES AS REQUIRED.
4. JB TERMINALS SHALL BE CAGE CLAMP TYPE SUITABLE FOR 2.5 SQ. MM COPPER WIRE. EXTERNAL CONNECTION, OF PLUG IN TYPE OR THROUGH CABLE GLAND, SHALL BE AS PER DATA SHEET.
5. ALL APPLICABLE ACCESSORIES SHALL BE PROVIDED AS INDICATED IN THE INDIVIDUAL CONTROL VALVE DATA SHEET / ACCESSORIES DATA SHEET.
6. 25 METERS 1/4" SS TUBING (AS PER ACCESSORIES DATA SHEET) & 1 SET OF SS FITTINGS TO BE SUPPLIED FOR EACH CONTROL VALVE FOR CONNECTION TO ISO VLV AT INST AIR HEADER ON ONE END AND TO AIR LOCK RELAY/AIR FILTER REGULATOR ON THE OTHER END. ALL THE SS FITTINGS SHALL BE DOUBLE COMPRESSION TYPE.

BHEL	1X800 MW APPDCL KRISHNAPATTANAM STAGE-II	DRG. No.	PE-TS-420-145-I104		
	TITLE:- CONTROL VALVE HOOK-UP DIAGRAM	REV. No.	00	DATE	29.12.16
		SHEET	108 OF OF 116		

CONTROL VALVE HOOK-UP DIAGRAM
(DOUBLE ACTING PISTON ACTUATOR WITH SMART POSITIONER)

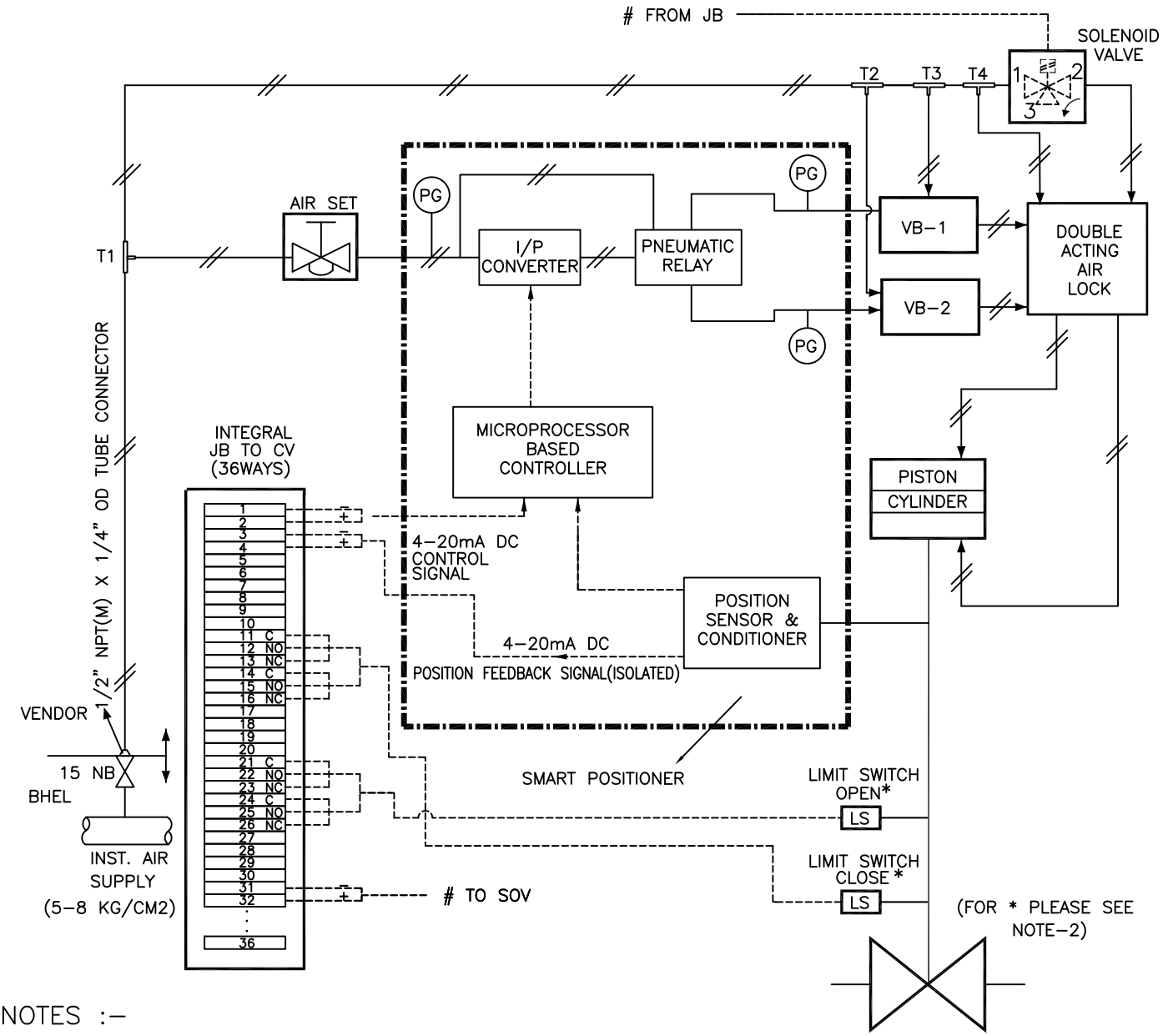

NOTES :-

1. POSITION OF EACH VALVE ON SUPPLY AIR FAILURE / ELECTRICAL SIGNAL FAILURE SHALL BE AS PER SPECIFICATION / DATA SHEET. AIR LOCK SHALL BE PROVIDED ACCORDINGLY.
2. SOLENOID VALVE & LIMIT SWITCHES WILL BE PROVIDED ONLY FOR CONTROL VALVES IF INDICATED IN RESPECTIVE DATA SHEETS.
3. SOLENOID VALVES PORTS CONDITION:
   PORT 1 AND 2 SHALL BE CONNECTED UNDER DE-ENERGISED CONDITION.
   PORT 2 AND 3 SHALL BE CONNECTED UNDER ENERGISED CONDITION.
4. PRESSURE GAUGES REQUIRED FOR AIR SUPPLY & OUTPUT(S).
5. MOUNTING ACCESSORIES AS REQUIRED.
6. POSITION FEEDBACK SIGNAL SHALL BE 2 WIRE 4-20mA ISOLATED SIGNAL.
7. JB TERMINALS SHALL BE CAGE CLAMP TYPE SUITABLE FOR 2.5 SQ. MM COPPER WIRE. EXTERNAL CONNECTION, OF PLUG IN TYPE OR THROUGH CABLE GLAND, SHALL BE AS PER DATA SHEET
8. ALL APPLICABLE ACCESSORIES SHALL BE PROVIDED AS INDICATED IN THE INDIVIDUAL CONTROL VALVE DATA SHEET / ACCESSORIES DATA SHEET.
9. 25 METERS SS TUBING (AS PER ACCESSORIES DATA SHEET) & 1 SET OF SS FITTINGS TO BE SUPPLIED FOR EACH CONTROL VALVE FOR CONNECTION TO ISO VLV AT INST AIR HEADER ON ONE END AND TO AIR LOCK RELAY/AIR FILTER REGULATOR ON THE OTHER END. ALL THE SS FITTINGS SHALL BE DOUBLE COMPRESSION TYPE.
10. VOLUME BOOSTER (ALONG WITH TEE-T2 AND RELATED TUBING & CONNECTORS) SHALL BE PROVIDED IF REQUIRED. AIR CONNECTION TO VOLUME BOOSTER FROM TEE-T2 & TEE-T3 SHALL BE PROVIDED.

BHEL	1X800 MW APPDCL KRISHNAPATTANAM STAGE-II	DRG. No.	PE-TS-420-145-I104	
	TITLE:- CONTROL VALVE HOOK-UP DIAGRAM	REV. No.	00	DATE 29.12.16
		SHEET	109 OF 116	

SECTION – D

GUIDELINES FOR PACKING (PES-145-06C)

Guidelines for Packing

- ✓ After inspection of control valves assembly. Smart Positioner along with Pressure Gauge shall be disassembled & packed separately.
- ✓ Threaded connection of Smart Positioner & Pressure Gauge shall be shipped with the end caps fitted to avoid any damage.
- ✓ Instructions with sketch for mounting the Smart Positioner & Pressure Gauge shall be sent along with the aforesaid accessories.
- ✓ Packing of the control valves and Smart Positioner along with Pressure Gauge shall be done in separate wooden boxes/cases in order to avoid damage during transit and also during storage at site in tropical climatic conditions for a period of 18-24 months.
- ✓ All valves & smart positioner along with pressure gauges shall be packed properly with quality wooden planks with proper wooden frame support. Moreover the valves are internally covered with polythene sheets to protect from the water and moisture entry.
- ✓ Stronger shock absorbing cover material like expanded Polyurethane which can take any direct impact on it shall be used for packing
- ✓ Proper reaper support to be provided in the packing and Valve assembly to be aligned properly to avoid the damage of accessories during transit due to vibration effect.
- ✓ Marking for Fragile & Condensing environment shall be done on the packing box.

The Following Details are to be marked on the Packing Cases

- ✓ Address of consignee
- ✓ Purchase order no.
- ✓ Description of items or title of packing list
- ✓ Weight
- ✓ Dimension of the Box
- ✓ Marking showing upright position
- ✓ Marking showing sling position
- ✓ Marking showing umbrella (i.e. for machines/components to be stored under covered storage)

SECTION – D

SPECIFICATION FOR ELECTRIC ACTUATOR (PES-145-06D)

1.0 Electric Actuator

The electric actuator shall be employed for modulating duty control valves.

1.1 The actuator assembly shall be complete with drive motors, gears, hand wheel, signaling & switching units, associated control, integral starter, (when specified) and other accessories as required.

1.2 The Electric Actuator shall be capable of positioning the associated valve at the desired opening for all the operating conditions.

1.3 The motor shall be suitable for direct on line starting.

1.4 Motors shall be suitable for inching & plugging duty operations.

1.5 The motors shall be capable of starting and accelerating to rated speed at 85% of rated voltage.

1.6 The motors shall be rated for continuous operations for modulating duty.

1.7 The motor shall operate satisfactorily under the following conditions:

i) ±10% supply voltage variation at rated frequency.
ii) -5% to + 3% variation in frequency at rated supply voltage.
iii) Simultaneous variation in voltage and frequency, the sum of absolute percentage not exceeding 10%

1.8 The Actuator shall be suitable for mounting directly on the valve and shall be suitable for mounting in any position. Supports required for inclined mounting shall form part of supply of valve assembly.

1.9 The actuator shall be capable of producing the required torque and thrust at the output shaft for satisfactory operation of the associated valve.

1.10 Each actuator shall have a hand wheel for emergency operation. The hand wheel shall be designed such that it is declutched automatically when the power supply to the motor is restarted.

1.11 The hand wheel shall be so arranged that when looking from hand wheel, the valve is closed by rotating the hand wheel in clockwise direction.

1.12 Motor shall be totally enclosed conforming to IP-65 or better as per data sheet. The enclosure shall be suitable to protect the motor from leakage steam, water or oil from valve joints and glands.

1.13 Where flameproof enclosures are specified, it shall meet the specification IS-2148.

1.14 Insulation shall be at least class-B or better and shall be tropicalised to withstand the atmospheric condition.

1.15 The actuator shall be provided with antifriction bearing in grease filled cartridge.

1.16 Each actuator shall be provided with a mechanical position indicator to indicate accurately the valve position.

1.17 The integral starter, if specified in data sheet-A, shall be provided in weatherproof enclosure with protection class not less than IP-65 or better as per data sheet.

1.18 The integral starter shall consist of:

i) Mechanical & Electrically interlocked reversing contractors suitable for class AC4 duty or Thyristor as pet data sheet.
ii) Thermal overload relay.
iii) Step down control transformer with fuses.
iv) Interposing relay.
v) Monitoring relay
vi) Open, Close & Stop push buttons.
vii) Indicating lamps.
viii) Local-Remote lockable selector switch with spare potential free contacts, wired for remote interface.
ix) A potential free contact shall be provided for remote annunciation of power failure/overload condition. The contact shall be SPDT, rated for at 5A 240V AC or 0.2A at 220V DC.

1.19 The actuator shall be suitably time rated for the duty cycle involved with the necessary number of starts per hour, but in no case, less than 1200 starts per hour.

1.20 The actuator shall be provided with a suitable control unit for receiving 4-20 mA signal from remote controller.

1.21 The servomotor gear should have self locking or suitable brake so as to maintain it's last position as and when the motor power is switched off.

1.22 Thermostat/Thermistor as specified in the data sheet shall be provided for sensing the winding temperature and giving trip command. The trip contact shall be change over type. The contact shall be wired up to the actuator terminal box.

2.0 **Accessories for Control Valve with Electric Actuator**

2.1 **Torque Switches**

i) Each actuator shall be provided with at least one open and one close torque switches each with 2 NO+2 NC contacts. The contacts shall be rated for 5A at 240V AC or 0.2A at 220V DC.
ii) The torque switches shall have a minimum accuracy $\pm$ 3% of set value.
iii) The torque switches shall be provided with calibrated knobs for setting desired torque. Separate knobs shall be provided for close and open torque switches.
iv) The torque switches shall be provided with mechanical latching device to prevent operation when unsealing from the positions. The latching device shall unlatch as soon as the valve leaves the end position. If such provision is not possible, the torque switches shall be bypassed by end position limit switches, which open on valve leaving end position. These limit switches are additional to the number of limit switches specified elsewhere.
v) The torque switches or worm gear shall be self-locking type so that when torque switch operates it remains operated until the actuator is operated in the reverse.
vi) The torque switch enclosure shall conform to IP-55.

2.2 **Limit Switches**

Each limit switch shall have 2NO+2NC contact with contacts rated for 5A 240V AC/0.2A 220V DC unless otherwise specified. The switch enclosure shall conform to IP-55. Each limit switch shall be supplied with cable glands.

2.3 **Space Heater**

A space heater shall be provided in limit switch and starter compartments to prevent condensation. This shall be suitable for the power supply specified in the data sheet. Where integral starters are provided the space heaters shall be wired to control supply within the actuator.

2.4 **Remote Position Transmitter**

The position transmitter shall be supplied as indicated in Data Sheet-A. The electronic position transmitter shall be non-contact type with 4-20mA DC 2-wire output suitable for 12-50V DC supply. The resistance type position transmitter shall have 0- 100 ohm variation for valve position change of 0-100%. The position transmitters of both types shall have $\pm$ 1% accuracy. The enclosure shall conform to IP-55. Necessary cable glands shall be supplied.

3.0 **Wiring**

i) The actuator and the accessories will be neatly wired up to the terminal boxes.
ii) The internal wiring shall be minimum of 1 mm^2 stranded PVC insulated copper conductor.
iii) The wiring shall be identified by means of numbered ferrules on both ends of all wires.

3.1 **Terminal and Terminal boxes**

Motor Terminal Box

i) The terminals, terminal boards, terminal boxes, winding tails and associated equipment shall be suitable for connection to supply system having short circuit capacity specified in data sheet and clearance time determined by the associated fuses.
ii) The terminals shall be stud type insulated from the frame. The insulation shall not be porcelain. The studs shall be of brass or stainless steel or phosphor bronze of adequate size.
iii) The terminal box shall be totally enclosed conforming to degree of protection IP-65.

Actuator Terminal Box

i) All terminals of limit and torque switches, space heater, position transmitters, thermostat/thermistor shall be brought to a common terminal box. The enclosure shall be to degree of protection IP-65.
ii) Terminal board with plug in connector shall be provided. Alternatively stud type or insertion type may be considered. Pinch screw type however will not be accepted. All terminals shall be shrouded to prevent accidental contact. Where stud type terminals are offered, it shall be as per clause 3.1(ii)-Motor Terminal Box.
iii) There shall be at least five terminals spare to terminate spare cores of cable.

3.2 **Cable Glands**

The motor terminal box and actuator terminal box shall be provided with required number of double compression nickel plated brass cable glands to suit cable type and associated size.

3.3 **Earthing Terminal**

Two earthing terminal shall be provided on either side of motor and actuator terminal box.

SECTION-D

SUB-VENDOR LIST

SUB VENDOR LIST

(FOR ACCESSORIES)

Sl. No.	ITEM DESCRIPTION	SUB-VENDORS
1.	SMART POSITIONER	SIEMENS (GERMANY) ABB (USA) METSO (USA) EMERSON(FISHER ROSEMOUNT) (USA) MASONEILAN(DRESSER) (FRANCE) YAMATAKE (JAPAN) FLOW SERVE (USA) FOX BORO (GERMANY) SMAR (BRAZIL)
2.	AIR FILTER REGULATOR	PLACKA INDIA (CHENNAI) SHAVO-NORGREN INDIA (MUMBAI) SCHRADER SCHORILL DUNCAN LTD. INDIA (MUMBAI) FAIRCHILD (USA) SMC PNEUMATICS INDIA (NOIDA)
3.	AIR LOCK RELAY	AS PER MANUFACTURER STANDARD
4.	SOLENOID VALVE	ASCO (USA) ROTEX INDIA (VADODARA) SCHRADER INDIA (PUNE) AVCON INDIA(MUMBAI) HERION-NORGREN (GERMANY) IMI-NORGREN (GERMANY) JAFFERSON (ARGENTINA)
5.	POSITIONER(CONVENTIONAL)	AS PER MANUFACTURER STANDARD
6.	E/P CONVERTER	AS PER MANUFACTURER STANDARD
7.	POSITION FEEDBACK TRANSMITTER	AS PER MANUFACTURER STANDARD
8.	VOLUME BOOSTER	AS PER MANUFACTURER STANDARD
9.	JUNCTION BOX	AS PER MANUFACTURER STANDARD