The following modifications with respect to Technical Specification for **EFFLUENT TREATMENT PLANT PACKAGE FOR 4X270 MW BHADRADRI TPS, technical** specification no **PE-TS-411-164-A001** shall apply.

Bidder to note that existing clauses/details as appearing in the specification stands deleted and clauses/details as mentioned in "Modified to or Read as" column shall be applicable and complied by the bidder as listed below in **SCHEDULE A** .

SCHEDULE A

MODIFIED CLAUSES/PAGE NUMBERS.

Sl no.	Vol. No.	Section/ Description	Clause no	Page no	Existing clause/details	To be Read as
1.	IIB	SECTION I/ P&ID FOR EFFLUENT TREATMENT PLANT & AMENDMENT 1 DATED 07.03.2018 SL NO.1	P&ID FOR EFFLUENT TREATMENT PLANT	227 of 481	P&ID FOR EFFLUENT TREATMENT PLANT R8	P&ID FOR EFFLUENT TREATMENT PLANT R8 has been replaced with P&ID FOR EFFLUENT TREATMENT PLANT R10. R10 shall be referred wherever R8 of P&ID is mentioned in BHEL technical specification no PE-TS-411-164-A001, R1 wrt EFFLUENT TREATMENT PLANT.
2.	IIB	SECTION I/ SUB SECTION-IA/ SPECIFIC TECHNICAL REQUIREMENT (MECHANICAL) & AMENDMENT 1 DATED 07.03.2018 SL NO.2	SPECIFIC TECHNICAL REQUIREMENT (MECHANICAL)	5-17 of 481	SPECIFIC TECHNICAL REQUIREMENT (MECHANICAL) R1 dated 05.02.2018	SPECIFIC TECHNICAL REQUIREMENT (MECHANICAL) R1 dated 05.02.2018 has been replaced with SPECIFIC TECHNICAL REQUIREMENT (MECHANICAL) R3 dated 10.04.2018. R3 shall be referred wherever R1 of SPECIFIC TECHNICAL REQUIREMENT (MECHANICAL) is mentioned in BHEL technical specification no PE-TS-411-164-A001, R1 wrt EFFLUENT TREATMENT PLANT.
3.	IIB	SECTION I/ SUB SECTION-IA/ DATASHEET A	DATASHEET A	230-240 of 481	DATASHEET A R1 dated 05.02.2018	DATASHEET A R1 dated 05.02.2018 has been replaced with DATASHEET A R3 dated 10.04.2018. R3 shall be referred wherever R1 of DATASHEET A is mentioned in BHEL technical specification no PE-TS-411-164-A001, R1 wrt EFFLUENT TREATMENT PLANT.

		& AMENDMENT 1 DATED 07.03.2018 SL NO.3				
4.	IIB	SECTION II/ SUB SECTION-IIA/ GENERAL TECHNICAL REQUIREMENT (MECHANICAL)	GENERAL TECHNICAL REQUIREMENT (MECHANICAL)	274-278 of 481	GENERAL TECHNICAL REQUIREMENT (MECHANICAL) R1 dated 05.02.2018	GENERAL TECHNICAL REQUIREMENT (MECHANICAL) R1 dated 05.02.2018 has been replaced with GENERAL TECHNICAL REQUIREMENT (MECHANICAL) R3 dated 10.04.2018. R3 shall be referred wherever R1 of GENERAL TECHNICAL REQUIREMENT (MECHANICAL) is mentioned in BHEL technical specification no PE-TS-411-164-A001, R1 wrt EFFLUENT TREATMENT PLANT.
5.	IIB	SECTION I/ PLOT PLAN	PLOT PLAN	228 of 481	PLOT PLAN R00	PLOT PLAN R00 has been replaced with PLOT PLAN R03A. R03A shall be referred wherever R00 of PLOT PLAN is mentioned in BHEL technical specification no PE-TS-411-164-A001, R1 wrt EFFLUENT TREATMENT PLANT.
6.	IIB	SECTION I/ SUB SECTION-IA/ ANNEXURE VI	MANDATORY SPARES LIST	125 of 481	MANDATORY SPARES LIST	Following additional mandatory spares have been included in bidder's scope: **Horizontal Centrifugal Pumps (For each Type and Size)** **Sl. No.** / **Name of Items** / **Unit** / **QUANTITY** i. / Impeller for each type / Set / 1 ii. / Wearing rings – Imp eller for each type (if applicable) / Set / 1 iii. / Wearing rings – Casing for each type (if applicable) / Set / 1 iv. / Shaft for each type / Set / 1 v. / Shaft Sleeves for each type / Set / 1 vi. / Stuffing box for each type / Set / 1 vii. / Coupling between Pump & motor, bushes, pins with all fasteners & coupling Guards / Set / 1 viii. / Pump bearings for each type / Set / 1 ix. / Gland Packing & Gland Assembly for each type / Set / 1 x. / Mechanical seal as applicable / Set / 1 xi. / Impeller key / Number / 1 Bidder to comply.

DATASHEET A

1.0	**TRANSFORMER YARD OILY WASTE COLLECTION PIT**	
1.1	Number	Four (4) numbers [One per unit] 1. TRANSFORMER YARD OILY WASTE COLLECTION PIT FOR UNIT-1 (E1) 2. TRANSFORMER YARD OILY WASTE COLLECTION PIT FOR UNIT-2 (E2) 3. TRANSFORMER YARD OILY WASTE COLLECTION PIT FOR UNIT-3 (E3) 4. TRANSFORMER YARD OILY WASTE COLLECTION PIT FOR UNIT-4 (E4)
1.2	Capacity (each)	To accumulate the oil leakage of largest transformer & fire water the same shall be provided during detailed engineering.
1.3	Material	RCC
2.0	**FLOOR WASH COLLECTION PIT FROM BOILER AND TG AREA**	
2.1	Number	Eight (8) nos [One no. pit for each TG & Boiler Area for each unit] 1. WASTE WATER COLLECTION PIT FROM BOILER AREA UNIT 1 (E5) 2. WASTE WATER COLLECTION PIT FROM BOILER AREA UNIT 2 (E6) 3. WASTE WATER COLLECTION PIT FROM BOILER AREA UNIT 3 (E18) 4. WASTE WATER COLLECTION PIT FROM BOILER AREA UNIT 4 (E19) 5. WASTE WATER COLLECTION PIT FROM TG AREA UNIT 1 (E20) 6. WASTE WATER COLLECTION PIT FROM TG AREA UNIT 2 (E21) 7. WASTE WATER COLLECTION PIT FROM TG AREA UNIT 3 (E22) 8. WASTE WATER COLLECTION PIT FROM TG AREA UNIT 4 (E23)
2.2	Effective Capacity (each)	10 CuM
2.3	Material	RCC
3.0	**BOILER BLOW DOWN SUMP**	
3.1	Number	Four (4) numbers [One per unit] 1. BOILER BLOW DOWN SUMP (FOR UNIT-1) (E7) 2. BOILER BLOW DOWN SUMP (FOR UNIT-2) (E8) 3. BOILER BLOW DOWN SUMP (FOR UNIT-3) (E9) 4. BOILER BLOW DOWN SUMP (FOR UNIT-4) (E10)
3.2	Effective Capacity (each)	25 CuM
3.3	Material	RCC
4.0	**ESP AREA WASHING WASTE COLLECTION SUMP**	
4.1	Number	Four (4) numbers [One per unit] 1. ESP WASH WATER SUMP (FOR UNIT-1) (E11) 2. ESP WASH WATER SUMP (FOR UNIT-2) (E12) 3. ESP WASH WATER SUMP (FOR UNIT-3) (E13) 4. ESP WASH WATER SUMP (FOR UNIT-4)

		(E14)
4.2	Effective Capacity (each)	10 CuM
4.3	Material	RCC
5.0	**COMMON OILY WASTE COLLECTION SUMP (E15)**	
5.1	Number	One (1) number.
5.2	Effective Capacity	50 m3
5.3	Material	RCC
6.0	**LAMELLA CLARIFIER / TUBE SETTLER**	
6.1	Number	One (1) number.
6.2	Capacity	20 m3/hr.
6.3	Type	As per supplier recommendation.
6.4	Distance between successive plates/tubes	As per supplier recommendation.
6.5	Angle of inclination	As per supplier recommendation.
6.6	Tanks & internals	MSEP
6.7	Oil skimmer	MSEP
6.8	Slop oil drum	Two nos. 1000 lit each, MOC: MS with Epoxy painted
6.9	Sludge Trolley	Two nos. 1000 lit each, MOC: MS with Epoxy painted
6.10	Flash mixer tank & flocculator tank	
6.10.1	Number	1X100% flash mixer tank and 1X100% flocculation tank
6.10.2	Capacity	As per system/specification requirement
6.10.3	Tanks and internals	MSEP
6.10.4	Agitator	One number, gear operated SS 316
6.10.5	Flocculator	One number, gear operated SS 316
7.0	**SLUDGE COLLECTION PIT (E16)**	
7.1	Number	One (1) number
7.2	Effective Capacity	20 m3
7.3	Material	RCC
7.4	**SLUDGE PIT BLOWERS**	
i	Number	Two (2) Number [1W+1S]
ii	Type of Blower	Rotary, twin lobe
iii	Rated Capacity	Suitable to meet 100% of system requirements
iv	Head to be developed at rated capacity	Head shall be develop at rated capacity and shall be decided during detailed engineering.
v	Material of construction	
	• Casing	CI
	• Lobes	CS to BS 970, EN9 Forged
	• Shaft	CS to BS 970, EN9 Forged
8.0	**CHEMICAL DOSING SYSTEM FOR LAMELLA CLARIFIER / TUBE SETTLER**	
8.1	**ALUM DOSING SYSTEM (@ 70 ppm)**	
8.1.1	Tank	Number - One Number Capacity (effective) - 24 Hour storage capacity of 10% Alum solution +20% margin excluding freeboard to dose Alum to lamella clarifier / tube settler Type – vertical cylindrical with dished bottom. Material - MSRL (4.5 MM Thick RL), IS 2062, Gr. B. Motorized Stirrer (MOC-SS 316) - One (1) number (Top/Side mounted). Dissolving Basket-One no. (MOC: SS 316)
8.1.2	Pump	Number-Two (2) numbers (1W+1S). Type – Simplex hydraulically operated Diaphragm type. Capacity and Head- As per system requirement. MOC: Liquid end (Pump head Valve, valve spring Housing, etc.)- AISI 316, Diaphragm-PTFE, Packing-

		PTFE, Shaft-Hardened steel (EN8-BS-970)/ AISI-316 Pumps shall be provided with accessories such as Y-type suction strainers, pressure dampeners, Pressure Gauge, safety relief valves along with recirculation to tank etc.
8.2	**PE DOSING SYSTEM (@ 1 ppm)**	
8.2.1	Tank	Number-One Number Capacity (effective) - 24 Hrs storage capacity of 0.5% PE solution +20% margin excluding freeboard to dose PE to lamella clarifier / tube settler Type – vertical cylindrical with dished bottom. Material- MSRL (4.5 MM Thick RL), IS 2062, Gr. B. Motorized Stirrer (MOC-SS 316)- One (1) number (Top mounted)
8.2.2	Pump	Number- Two (2) numbers (1W+1S). Type – Simplex hydraulically operated Diaphragm type. Capacity and Head- As per requirement. MOC: Liquid end (pump head valve, valve housing, etc.), valve spring- PP / FRP/CPVC/Rubber lined steel and Diaphragm-TEFLON. Pumps shall be provided with accessories such as Y-type suction strainers, pressure dampeners, Pressure Gauge, safety relief valves along with recirculation to tank etc
9.0	**CENTRAL MONITORING BASIN (CMB) (E17)**	
9.1	Number	One (1) number
9.2	Compartments	Two (2) numbers
9.3	Effective Capacity (each compartment)	935 m3
9.4	Material	RCC with A/R tiling
9.5	Type	Rectangular with flat bottom
9.6	Arrangement	Inlet and Outlet chamber with gate
10.0	**NaOCl DOSING SYSTEM FOR CMB**	
10.1	**NaOCl PREPARATION TANK**	
10.1.1	Number	One
10.1.2	MOC	MS (3 mm Thick) with 4.5 MM RL
10.1.3	Capacity	To store 24 hours solution (prepared) requirement.
10.2	**NaOCl Dosing Pump**	
10.2.1	Number	Two (2X100%)
10.2.2	Type	Simplex hydraulically operated Diaphragm type.
10.2.3	Displacer	Plunger/diaphragm
10.2.4	Capacity and pressure	As per system requirements
10.2.5	Capacity variation	0-100%
10.2.6	Materials of construction	SS 316
10.2.7	Accessories	Pumps shall be provided with accessories such as Y-type suction strainers, pressure dampeners, Pressure Gauge, safety relief valves along with recirculation to tank etc
11.0	**ACID DOSING SYSTEM FOR CMB**	
11.1	**ACID DOSING TANK**	
11.1.1	Number	One
11.1.2	MOC	MSRL (3 MM Thick with 4.5 MM inside RL)
11.1.3	Effective Capacity	To store 24 hours solution (prepared) requirement.
11.2	**ACID DOSING PUMP**	
11.2.1	Number	Two (2X100 %)
11.2.2	Capacity and Head	As per system requirement.
11.2.3	MOC of wetted parts	PP

11.2.4	Type	Positive displacement plunger type.
11.2.5	Accessories	Pumps shall be provided with accessories such as Y-type suction strainers, pressure dampeners, Pressure Gauge, safety relief valves along with recirculation to tank etc
12.0	**ALKALI DOSING SYSTEM FOR CMB**	
12.1	**ALKALI DOSING TANK**	
12.1.1	Number	One
12.1.2	MOC	MSRL (3 MM Thick with 4.5 MM inside RL)
12.1.3	Effective Capacity	To store 24 hours solution (prepared) requirement.
12.2	**ALKALI DOSING PUMP**	
12.2.1	Number	Two (2X100 %)
12.2.2	Capacity and Head	As per system requirement.
12.2.3	MOC of wetted parts	SS316
12.2.4	Type	Positive displacement plunger type.
12.2.5	Accessories	Pumps shall be provided with accessories such as Y-type suction strainers, pressure dampeners, Pressure Gauge, safety relief valves along with recirculation to tank etc
13.0	**CHEMICAL STORAGE SPACE (In shed)**	
13.1	Storage area for chemicals	15 days
13.0	**WEIGHING SCALE**	
13.1	Type	Platform, dial type.
13.2	Number	One (1)
13.3	Capacity	0-1000 Kgs
14.0	**HOIST**	
14.1	Type	1. Electric in monorail in chemical dosing area 2. Electric in monorail for Effluent Transfer pumps of CMB
14.2	Number	Two (2).
14.3	Capacity	2 Ton.
15.0	**SAFETY ARRANGEMENT**	
15.1	Safety shower	One number safety shower shall be provided in chemical preparation area
15.2	Personal protection	Two sets of safety equipment each comprising PVC protection suits with hoods, rubber boots, face visors and thick PVC gauntlets shall also be provided.
16.0	**PIPING**	Pipe carrying instrument air or service air or air blower line shall be of ASTM A-53 type E Gr-B galvanized/IS 3589 Gr 410 galvanized/ IS 1239 heavy galvanized to IS 4736 or equivalent. All CS / MS pipes shall be of heavy grade as per IS1239 / IS 3589 Rest MOC of pipes as per P & ID PVC pipes shall be of minimum schedule 80 or as per system requirement whichever is higher. HDPE pipes shall be of minimum PE 80 or as per system requirement whichever is higher. Pipe MOC not mentioned in P & ID or in this datasheet shall be suitably selected as per system requirement and similar type of application. For All (PE/ Alum/ Sodium Hypochlorite/ acid/ alkali) dosing piping shall be of PVC/HDPE and for fitting/valves shall be of PP.

17.0	**VALVES**				
17.1	**BUTTERFLY VALVE** Butterfly valves shall be of double flanged or lugged wafer type of low leakage rate confirming to AWWA-C-504 class 150 (min.) or BS:5155 PN 10 (min.) Body: cast Iron IS:210 Gr. FG 260 Disc: SS 316. Shaft: ASTM.A296 Gr. CF8M Seat rings: Nitrile rubber, EPDM, Hypalon All the butterfly valves shall be provided with Hand wheel or lever as per the requirements. All the butterfly valves shall be provided with an indicator to show the position of the disc. Flanges shall conform to ANSI B 16.5 Cl.150 (min) **DIAPHRAGM VALVE** The Diaphragm shall conform to following requirement i) Design standard: BS:5156 or equivalent of required rating/class. (minimum rating of valves shall be PN 10. ii) Type: Flanged and lined body ends, sealed bonnet, weir pattern, tight shut off type iii) Material of Construction a. Body , Bonnet: Cast iron IS 210 Gr. FG 260 or equivalent or Cast steel ASTM A-216 Gr. WCB b. Body lining : Soft natural rubber, ebonite, Polypropelene c. Hand wheel : Cast Iron d. Compressor : Stainless Steel e. Stem and Bush : Stainless Steel **GATE VALVE** Type :Outside screw and rising stem type Stem,seat ring and wedge facing ring:SS, Rating: PN 10 (min). Other parts of the valve:As per IS:14846. **BALL VALVE/PLUG VALVE** Type :Full bore Rating: PN 10 (min). Body: cast Iron/carbon steel Ball: stainless steel Seat ring: PTFE Stem: Stainless steel Seat:Nitrile rubber,PTFE **GLOBE** Type: Double flanged or wafer type Rating: PN 10 (min). Body: Cast iron:IS 210 Gr FG260 Stem:stainless steel Disc: Cast iron. **NON RETURN VALVE** These valves shall be swing check type or dual plate type Swing check type (non-corrosive application) Body and disc: Cast iron. Hinge pin and door/disc pin: Cast steel ASTM A216 Gr. WCB Disc facing ring: stainless steel Body Seat ring: Stainless steel				
18.0	**Pump Description**	**Quantity**	**PUMP TYPE**	**Capacity and Head**	**Material of Construction**
	Transformer Yard Oily	Two (2X100%)	Single screw,	20 CuM/Hr.	Casing – 2% NiCi as

i.	waste transfer pumps (Unit-1)		vertical	(each) and Head shall be as per requirement.	per IS 210 FG 260 Rotor: CF8M, Shaft: CF8M, Stator: Nitrile Black
ii.	Transformer Yard Oily waste transfer pumps (Unit-2)	Two (2X100%)	Single screw, vertical	20 CuM/Hr. (each) and Head shall be as per requirement.	Casing – 2% NiCi as per IS 210 FG 260 Rotor: CF8M, Shaft: CF8M, Stator: Nitrile Black
iii.	Transformer Yard Oily waste transfer pumps (Unit-3)	Two (2X100%)	Single screw, vertical	20 CuM/Hr. (each) and Head shall be as per requirement.	Casing – 2% NiCi as per IS 210 FG 260 Rotor: CF8M, Shaft: CF8M, Stator: Nitrile Black
iv.	Transformer Yard Oily waste transfer pumps (Unit-4)	Two (2X100%)	Single screw, vertical	20 CuM/Hr. (each) and Head shall be as per requirement.	Casing – 2% NiCi as per IS 210 FG 260 Rotor: CF8M, Shaft: CF8M, Stator: Nitrile Black
v.	Common Oily waste transfer pumps	Two (2X100%)	Single screw, vertical	20 CuM/Hr. (each) and Head shall be as per requirement.	Casing – 2% NiCi as per IS 210 FG 260 Rotor: CF8M, Shaft: CF8M, Stator: Nitrile Black
vi.	ESP Waster Water Transfer pumps for Unit-1	Two (2X100%)	Vertical Centrifugal Impeller – open	15 CuM/Hr. (each) and Head shall be as per requirement.	Casing – CI IS-210 Gr. FG 260. Pump shaft/line shaft – SS 410 / EN 8 TO BS 970. Impeller – SS 304.
vii.	ESP Waster Water Transfer pumps for Unit-2	Two (2X100%)	Vertical Centrifugal Impeller – open	15 CuM/Hr. (each) and Head shall be as per requirement.	Casing – CI IS-210 Gr. FG 260. Pump shaft/line shaft – SS 410 / EN 8 TO BS 970. Impeller – SS 304.
viii.	ESP Waster Water Transfer pumps for Unit-3	Two (2X100%)	Vertical Centrifugal Impeller – open	15 CuM/Hr. (each) and Head shall be as per requirement.	Casing – CI IS-210 Gr. FG 260. Pump shaft/line shaft – SS 410 / EN 8 TO BS 970. Impeller – SS 304.
ix.	ESP Waster Water Transfer pumps for Unit-4	Two (2X100%)	Vertical Centrifugal Impeller – open	15 CuM/Hr. (each) and Head shall be as per requirement.	Casing – CI IS-210 Gr. FG 260. Pump shaft/line shaft – SS 410 / EN 8 TO BS 970. Impeller – SS 304.
x.	Boiler Blow Down Transfer pumps for unit-1	Two (2X100%)	Vertical Centrifugal Impeller – open	50 CuM/Hr. (each) and Head shall be as per requirement.	Casing – CI IS-210 Gr. FG 260. Pump shaft/line shaft – SS 410 / EN 8 TO BS 970. Impeller – SS 304.
xi.	Boiler Blow Down Transfer pumps for unit-2	Two (2X100%)	Vertical Centrifugal Impeller –	50 CuM/Hr. (each) and Head shall be	Casing – CI IS-210 Gr. FG 260. Pump shaft/line shaft

			open	as per requirement.	– SS 410 / EN 8 TO BS 970. Impeller – SS 304.
xii.	Boiler Blow Down Transfer pumps for unit-3	Two (2X100%)	Vertical Centrifugal Impeller – open	50 CuM/Hr. (each) and Head shall be as per requirement.	Casing – CI IS-210 Gr. FG 260. Pump shaft/line shaft – SS 410 / EN 8 TO BS 970. Impeller – SS 304.
xiii.	Boiler Blow Down Transfer pumps for unit-4	Two (2X100%)	Vertical Centrifugal Impeller – open	50 CuM/Hr. (each) and Head shall be as per requirement.	Casing – CI IS-210 Gr. FG 260. Pump shaft/line shaft – SS 410 / EN 8 TO BS 970. Impeller – SS 304.
xiv.	Sludge Transfer pumps	Two (2X100%)	Vertical Centrifugal	20 CuM/Hr. (each) and Head shall be as per requirement.	Casing – CI IS-210 Gr. FG 260. Pump shaft/line shaft – SS 410 / EN 8 TO BS 970. Impeller – SS 304.
xv.	Effluent Recirculation Pumps	Two (2X100%)	Horizontal Centrifugal	5 CuM/Hr. (each) and Head shall be as per requirement.	Casing and impeller – Rubber lined cast iron IS: 210 Grade FG 260 Pump shaft – Stainless steel-SS 316
xvi.	Effluent Transfer Pumps I	Two (2X100%)	Horizontal Centrifugal	300 CuM/Hr. (each) and Head shall be as per requirement.	Casing and impeller – Rubber lined cast iron IS: 210 Grade FG 260 Pump shaft – Stainless steel-SS 316
xvii.	Effluent Transfer Pumps II	Two (2X100%)	Horizontal Centrifugal	100 CuM/Hr. (each) and Head shall be as per requirement.	Casing and impeller – Rubber lined cast iron IS: 210 Grade FG 260 Pump shaft – Stainless steel-SS 316
xviii.	Effluent Transfer Pumps III	Two (2X100%)	Horizontal Centrifugal	20 CuM/Hr. (each) and Head shall be as per requirement.	Casing and impeller – Rubber lined cast iron IS: 210 Grade FG 260 Pump shaft – Stainless steel-SS 316
xix.	Boiler Floor Wash Water Transfer pumps Unit-1	Two (2X100%)	Vertical Centrifugal Impeller – open	15 CuM/Hr. (each) and Head shall be as per requirement.	Casing – CI IS-210 Gr. FG 260. Pump shaft/line shaft – SS 410 / EN 8 TO BS 970. Impeller – SS 304.
xx.	Boiler Floor Wash Water Transfer pumps Unit-2	Two (2X100%)	Vertical Centrifugal Impeller –	15 CuM/Hr. (each) and Head shall be	Casing – CI IS-210 Gr. FG 260. Pump shaft/line shaft

			open	as per requirement.	– SS 410 / EN 8 TO BS 970. Impeller – SS 304.
xxi.	Boiler Floor Wash Water Transfer pumps Unit-3	Two (2X100%)	Vertical Centrifugal Impeller – open	15 CuM/Hr. (each) and Head shall be as per requirement.	Casing – CI IS-210 Gr. FG 260. Pump shaft/line shaft – SS 410 / EN 8 TO BS 970. Impeller – SS 304.
xxii.	Boiler Floor Wash Water Transfer pumps Unit-4	Two (2X100%)	Vertical Centrifugal Impeller – open	15 CuM/Hr. (each) and Head shall be as per requirement.	Casing – CI IS-210 Gr. FG 260. Pump shaft/line shaft – SS 410 / EN 8 TO BS 970. Impeller – SS 304.
xxiii.	TG Floor Wash Water Transfer pumps Unit-1	Two (2X100%)	Vertical Centrifugal Impeller – open	15 CuM/Hr. (each) and Head shall be as per requirement.	Casing – CI IS-210 Gr. FG 260. Pump shaft/line shaft – SS 410 / EN 8 TO BS 970. Impeller – SS 304.
xxiv.	TG Floor Wash Water Transfer pumps Unit-2	Two (2X100%)	Vertical Centrifugal Impeller – open	15 CuM/Hr. (each) and Head shall be as per requirement.	Casing – CI IS-210 Gr. FG 260. Pump shaft/line shaft – SS 410 / EN 8 TO BS 970. Impeller – SS 304.
xxv.	TG Floor Wash Water Transfer pumps Unit-3	Two (2X100%)	Vertical Centrifugal Impeller – open	15 CuM/Hr. (each) and Head shall be as per requirement.	Casing – CI IS-210 Gr. FG 260. Pump shaft/line shaft – SS 410 / EN 8 TO BS 970. Impeller – SS 304.
xxvi.	TG Floor Wash Water Transfer pumps Unit-4	Two (2X100%)	Vertical Centrifugal Impeller – open	15 CuM/Hr. (each) and Head shall be as per requirement.	Casing – CI IS-210 Gr. FG 260. Pump shaft/line shaft – SS 410 / EN 8 TO BS 970. Impeller – SS 304.

Note: 1. Separate flange joint shall be provided by bidder for NRV of Pump.
2. All pipes, fittings, valves etc. shall be provided by bidder of minimum PN 10/150H class rating.

ELECTRIC HOIST

Sl.no	DESCRIPTION	TECHNICAL PARTICULARS
1.0	Type	Steel wire electric hoist with electrically operated trolley
2.0	Scope (Qty., Capacity, Lift, Travel Length)	As per specification and layout requirement
3.0	Type of service	Indoor
4.0	Overload test	125% of SWL
5.0	Design Ambient temperature	50° C
6.0	General Design	As per IS: 3938 / 1983 or latest, Class-II duty
7.0	Operating speed	
7.1	Hoisting speed	3 MPM.

7.2	Trolley speed	15 MPM
8.0	Type of transmission	Through Electric motor and gear box.
9.0	Wire Rope	
9.1	Construction / core	6 x36/ 6X37 (Steel core)
9.2	Code	IS:2266
9.3	Number of falls	Min. 4
9.4	Factor of safety	Not less than 5
10.0	Load Hook and block	NORMALISED HOOK ONLY
10.1	Type of load hook	Plain shank trapezoidal section with safety latch.
10.2	Load hook Code	IS: 15560
10.3	Load hook Material	As per IS:15560
10.4	Hook suspension	Thrust bearing
10.5	Material of block suspension	Fabricated from steel plate, Material: IS: 2062
11.0	Gearing	
11.1	Type	Spur / Helical
11.2	Gear/ pinion material	as per IS 3938
11.3	Lubrication	Oil splash/ grease lubricated
11.4	Bearing type	Antifriction Ball / Roller
12.0	Trolley drive	
12.1	Wheel	Single flange taper thread
12.2	Wheel conform to (Std. / code)	IS: 3938
12.3	Wheel material	As per IS:3938
12.4	Bearing type	Antifriction Ball / Roller
12.5	Trolley type	Rolled structural steel with side plates extended beyond wheel flanges to protect wheels.
12.6	Hardness	Max hardness 200 BHN
13.0	SHEAVE	
13.1	Material	Fabricated from steel plate. IS: 2062 Gr. A or Gr. B / as per IS: 3938
13.2	Bearing type	Antifriction Ball / Roller.
14.0	BRAKE (HOIST and TROLLEY)	
14.1	Type	DC EM brakes disc type (fail to safe).
14.2	Capacity	As per IS 3938.
14.3	Number	One number for each motor.
15.0	ROPE DRUM	
15.1	Material	Cast iron, cast steel or mild steel.
15.2	Flange / Flangeless	Flanged

15.3	Type of groove	As per manufacturers standard to suit the layout requirement.(Shall be decided during detail engineering)	
17.0	TYPE OF DSL		
17.1	CT travel	PVC Shrouded bus bar conductor type DSL	
18.0	MOTORS		
18.1	Type	Sq. Cage induction, TEFC, S4 duty, 40% CDF.	
18.2	Number of start	150 starts / hr	
18.3	Voltage, Phase and Frequency	415V ±10%, 3 phase, 4 wire, 50 Hz	
18.4	Class of insulation	Class “F” and temperature rise limited to class B.	
18.5	Type of enclosure	TEFC	
18.6	Degree of protection provided for enclosure	IP-54/IP-55 depending upon Indoor / Outdoor application	
18.7	Margin	Motor rating will be calculated keeping margin of at least 15% over the maximum power requirement in the duty condition specified.	
19.0	LIMIT SWITCHES	Hoisting	Trolley
19.1	Type	Snap action, self actuating type	Lever type
20.0	Control panel	* Fabricated from Cold rolled sheet steel not less than 2.5mm for front & rear & 2mm for side, top & bottom portion with gland plate of 3mm thick. * Degree of protection shall be IP 54. * Power on indicating lamps shall be provided by bidder * Panel illumination lamps operated by door switch. * 2 nos earthing terminals on panel. * 20 % spares terminals (clip on type) shall be provided by bidder. * Power and control terminals (clip on type) shall be on separate channels. * Gland plate shall be double brass compression type.	
20.1	Qty	1 No.	
21.0	Pendent Push buttons	Up /down / forward / Reverse push buttons. Indicative marking for easy operation shall be provided by bidder.	
22.0	Power cables	FRLS / EPR flexible Cu cable / Aluminum cable	
23.0	Control cable	FRLS / EPR flexible Cu cable	
24.0	Control Voltage	110 V	
25.0	Painting	**A) <u>Structural</u>** **Surface preparation :** De greasing and Mechanical cleaning with wire brush or hand tool. (SA 1/ ST 2 / ST 3 as applicable)	

		Primer : Red oxide Zinc phosphate (Alkyd medium)- 2 coat , DFT 35 µ per coat. **Finish Coat** : Synthetic enamel (Alkyd medium) as per IS: 2932- 2 coats, DFT 35 µ per coat. **Total DFT : 140µ** **B) <u>Electrical /Control Panel</u>** **Surface preparation:** Seven tank process **Primer :** Red Oxide Zinc phosphate (Alkyd medium)- 2 coat , Minimum DFT 35 µ per coat. **Finish Coat :** Synthetic enamel (Alkyd medium) as per IS: 2932- 2 coats, Minimum DFT 35 µ per coat. **Total DFT : 140 µ**
MANUAL HOIST (CHAIN PULLEY BLOCK)		
1	Type	Chain pulley block with/without travelling trolley
2	General Design	IS: 3832
3	Duty Class as per IS:3832	Class –II
4	Hoisting Mechanism	
a)	Type	Hand operated gear transmission
b)	Type of gear	Spur / Helical
c)	Load Chain	
i)	Type	Link type
ii)	Material	T (8) as per IS: 6216
iii)	Conforms to (Std./Code)	IS: 6216
d)	Hand Chain	
i)	Type	Link type
ii)	Material	Mild steel Grade 30
iii)	Conform to Std.	IS:2429 (Part I)
e)	Load Hook & Hook Block	
i)	Type of load hook	Plain shank- Trapezoidal section
ii)	Load hooks conforms to	IS: 15560
iii)	Type of hook suspension	Swivelling type with lock
iv)	Type of make of bearing	Thrust ball bearing of hook suspension
v)	Type & Material of hook	Carbon steel/forged steel As per IS 15560
f)	Gears/ Pinion	
i)	Type	Spur
ii)	Material	Alloy steel / carbon steel
iii)	Type of Bearing	Antifriction ball bearing / Roller
h)	Sprockets:	
	Type of bearings used	Antifriction ball bearing / Roller
i)	Method of lubrication	
	Bearings	Grease
	Gearing & Pinions	Grease
	Sprockets	Grease
j)	Brakes	
	Type	Screw and friction disc type

5	Trolley and Bridge drive	
a)	Trolley	
i)	Type	Geared (Manually operated)
ii)	Material of frame	Mild steel (IS:2062 Grade A or B)
b)	Drive Chain	
i)	Type	Link type
ii)	Material	Steel Gr.30 as per IS 2429 (part 1)
c)	Wheel	
i)	Number of pairs of wheel	Two in each trolley/bridge
ii)	Flange	Single flanged
iii)	Wheel material	Cast Iron Gr. FG 200 as per IS:210
iv)	Type of bearings need	Antifriction
d)	Gears	
i)	Type	Spur / helical
ii)	Material	EN8
iii)	Type of bearings used	Antifriction
e)	Method of lubrication for	
i)	Bearings	Grease
ii)	General	Grease
iii)	Sprockets	Grease
6	Painting	As per manufacturer standard

FIRST ANGLE PROJECTION

ALL DIMENSIONS ARE IN MM

DRAWING NO.

CUSTOMER'S DRAWING NO.

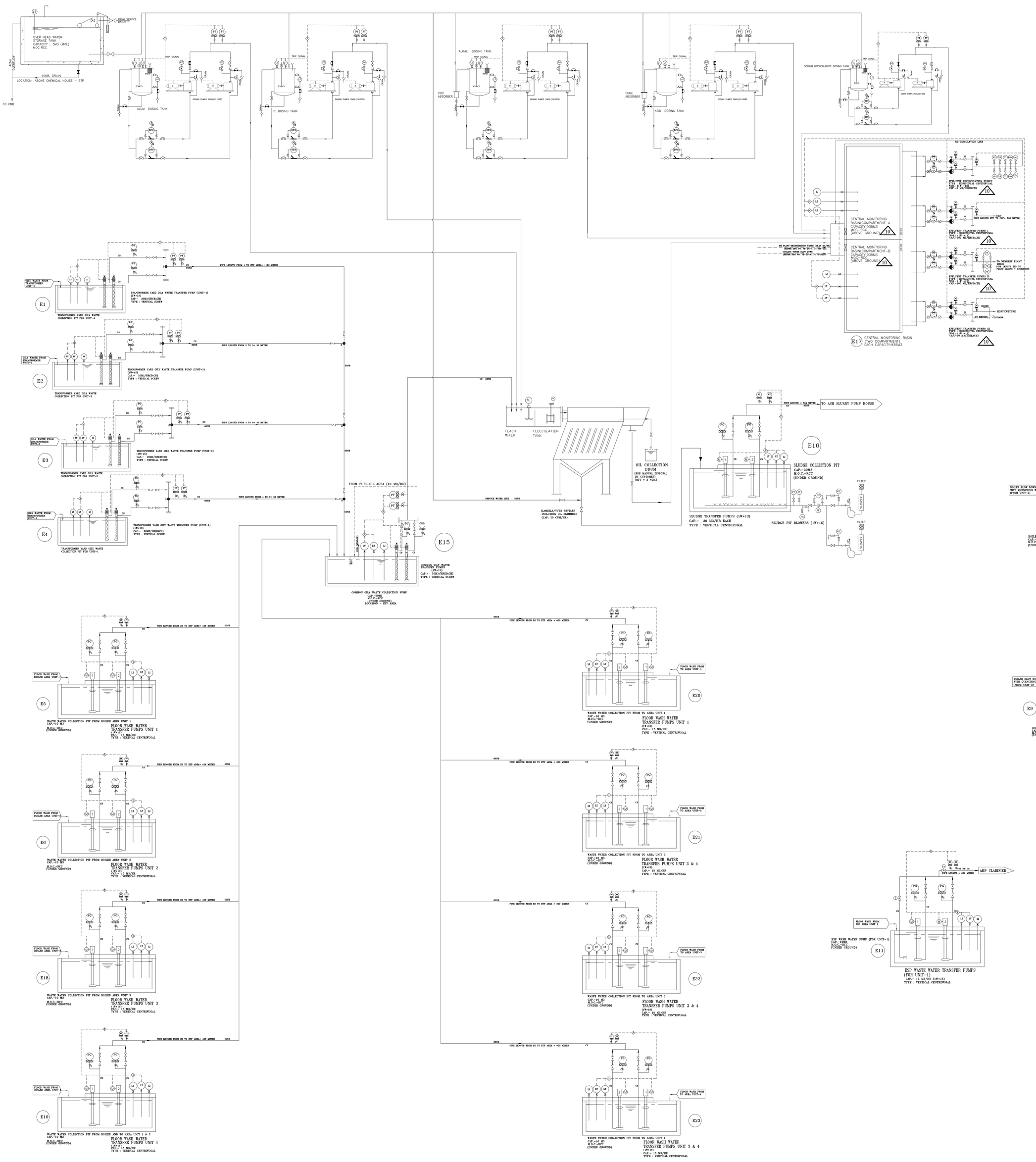

NOTES:

1. DRAINS OF CHEMICAL DOSING SYSTEM SHALL BE ROUTED TO CENTRAL MONITORING BASIN.
2. DEPTH OF SUMP MAY VARY FROM 2.0M TO 4.5M FOR SUMPS OUTSIDE ETP AREA.
3. ALL ITEMS, INSTRUMENTS, PIPING, VALVES, FITTINGS, EQUIPMENTS ETC. SHOWN IN THIS P & ID ARE IN BIDDER'S SCOPE.
4. FLUSHING SYSTEM IS NOT SHOWN IN THE P & ID. HOWEVER THE SAME IS IN THE SCOPE OF BIDDER FOR CHEMICALS AND SLUDGE LINES ETC. AS SPECIFIED IN TENDER SPECIFICATION.
5. MOC OF ANY ITEM NOT MENTIONED SHALL BE SUITABLY CONSIDER BY BIDDER AS PROCESS AND SYSTEM REQUIREMENTS.
6. PIPING, VALVE, INSTRUMENTATION, FITTING ETC SHOWN IN THIS P & ID ARE BARE MINIMUM REQUIREMENT. HOWEVER BIDDER TO CONSIDER ADDITION OF ITEM / EQUIPMENT BASED UPON SYSTEM AND PROCESS REQUIREMENTS TO MAKE SYSTEM EFFICIENT AND TROUBLE FREE.
7. INSTRUMENTATION FURNISHED IN THE P & ID IS A MINIMUM REQUIREMENT. HOWEVER, ANY INSTRUMENT REQUIRED FOR COMPLETENESS OF THE SYSTEM SHALL BE PROVIDED BY BIDDER WITHOUT ANY COST IMPLICATION. FOR REDUNDANCY CRITERIA, VENDOR TO FOLLOW THE CLAUSE PERTAINING TO REDUNDANCY CRITERIA MENTIONED IN THE SPECIFIC TECHNICAL REQUIREMENT.
8. PIPE DISTANCES SHOWN IN THIS DRAWING ARE FROM ONE AREA TO ANOTHER AREA ONLY. THESE PIPES SHALL BE IN BIDDER'S SCOPE. BIDDER TO CONSIDER PIPING LENGTH FOR INTERCONNECTION REQUIRED IN RESPECTIVE AREA IN THEIR SCOPE AS ADDITIONAL.

MANUAL VALVE LEGEND–

- NON RETURN VALVE
- GATE VALVE
- 3 WAY GAUGE COCK
- BALL VALVE
- RELIEF VALVE
- DIAPHRAGM VALVE
- NON RETURN VALVE
- MOTORIZED BUTTERFLY VALVE
- BUTTERFLY VALVE

INSTRUMENT LEGEND–

- FIELD INSTRUMENT
- PRESSURE GAUGE
- FLOW TRANSMITTER
- LEVEL TRANSMITTER
- LEVEL GAUGE
- ALARM
- LEVEL INDICATOR
- DIFFERENTIAL PRESSURE SWITCH
- DIAPHRAGM SEAL
- FLOW INDICATOR
- PRESSURE TRANSMITTER
- LEVEL INDICATOR (FLOAT & BOARD TYPE)
- INTERLOCK
- PH INDICATING TRANSMITTER
- TEMPERATURE INDICATOR
- TURBIDITY METER
- OIL ANALYSER
- FREE RESIDUAL CHLORINE ANALYSER

EQUIPMENT–

- HORIZONTAL CENTRIFUGAL PUMP
- MOTOR OPERATED
- FLOCCULATOR
- VERTICAL SCREW PUMP
- VERTICAL PUMP
- GT–MANUAL GATE
- SIMPLEX STRAINER
- 'Y' TYPE STRAINER
- MOTOR OPERATED AGITATOR WITH REDUCTION GEAR
- POSITIVE DISPLACEMENT PUMP
- VENTURY MIXER

JOB NO. 411											
STATUS: CONTRACT											
DISTRIBUTION											
TO											
No.OFF											
REV	DATE	ALTD	CHD	APPD							

OWNER: TELANGANA STATE POWER GENERATION CORPORATION LIMITED.

PROJECT: 4X270 MW BHADRADRI TPS.

BHARAT HEAVY ELECTRICALS LTD
POWER GROUP
PROJECTS ENGINEERING MANAGEMENT
NOIDA

DEPT CODE		NAME	SIGN	DATE
MAX	DRN	DK		27.03.2018
	DESN	VG		27.03.2018
	CHD	JP /AKS		27.03.2018
	APPD	PK		27.03.2018

TITLE: P & I DIAGRAM FOR EFFLUENT TREATMENT PLANT

DEPT. | SCALE | DRAWING NO.

SIGN

DATE

PE-DG-411-164A-A001

SHEET 1 OF 1 | REV 10

SIZE-A1

COPY RIGHT AND CONFIDENTIAL
The information on this document is the property of BHARAT HEAVY ELECTRICALS LIMITED
it must not be used directly or indirectly in any way determental to the interest of the company.

FIRST ANGLE PROJECTION

ALL DIMENSIONS ARE IN MM

DRAWING No. PE-DG-411-100-M001

CUSTOMER'S DRAWING No.

TABLE

FACILITY	DESCRIPTION OF FACILITIES
1.0	**MAIN PLANT AREA**
1.1	SWITCH YARD
1.2	TRANSFORMER YARD
1.3	TURBINE BUILDING
1.4	BOILER
1.5	ESP
1.6	ESP CONTROL ROOM
1.7	CHIMNEY
1.8	SPACE FOR FGD – DELETED
1.9	IA & SA COMPRESSOR HOUSE
1.10	DG SET
2.0	**WATER SYSTEM**
2.1	RAW WATER RESERVOIR
2.2	RAW WATER PUMP HOUSE
2.3	PT PLANT
2.4	DM PLANT
2.5	NDCT
2.6	CW PUMP HOUSE
2.7	CW CHLORINATION PLANT FOR CW SYSTEM
2.8	CW TREATMENT PLANT FOR CW SYSTEM
2.9	CLARIFIED WATER STORAGE TANK & PUMP HOUSE
2.10	EFFLUENT TREATMENT PLANT
2.11	CHEMICAL LAB
2.12	SEWAGE TREATMENT PLANT
2.13	DM TANKS & DM TRANSFER PUMPS
2.14	CONDENSATE STORAGE TANKS AND CONDENSER MAKE UP & BOILER FILL PUMPS
2.15	DELETED
3.0	**FUEL OIL SYSTEM**
3.1	FUEL OIL UNLOADING TRENCH
3.2	FUEL OIL UNLOADING AND PRESSURISING PUMP HOUSE
3.3	FUEL OIL STORAGE TANK AREA
3.4	FUEL OIL FORWARDING PUMP HOUSE
3.5	HFO UNLOADING PLATFORM
4.0	**COAL HANDLING PLANT**
4.1	WAGON TIPPLER
4.2	CRUSHER HOUSE
4.3	CRUSHED COAL STOCKPILE
4.4	CHP CONTROL ROOM/CHP MCC ROOM
4.5	STACKER RECLAIMER
4.6	TRANSFER POINT (TP)
4.7	PENT HOUSE (PH)
4.8	COAL BELT CONVEYOR
4.9	DUST SUPPRESSION PUMP HOUSE
4.10	COAL PILE RUN OFF POND
4.11	BULL DOZER SHED
5.0	**ASH HANDLING PLANT**
5.1	FLY ASH SILOS
5.2	ASH SLURRY PUMP HOUSE
5.3	ASH WATER TANK
5.4	ASH WATER PUMP HOUSE
5.5	AHP CLARIFIER
5.6	AHP VACUUM CUM COMPRESSOR HOUSE
5.7	SILO UTILITY BUILDING
5.8	AHP CONTROL ROOM /AHP MCC ROOM
5.9	FAE TOWER
6.0	**NON – PLANT BUILDING**
6.1	ADMIN. BUILDING
6.2	CANTEEN
6.3	MAIN GATE
6.4	SERVICE BUILDING
6.5	STORAGE SHEDS
6.6	WEIGH BRIDGE
6.7	PARKING SHEDS
6.8	WATCH TOWERS
7.0	**FIRE FIGHTING SYSTEM**
7.1	FOAM PUMP HOUSE
7.2	BOOSTER PUMP HOUSE
7.3	FIRE STATION
8.0	**FGD SYSTEM ***
8.1	FGD (GGH ABSORBER)
8.2	GYPSUM HANDLING & DEWATERING AREA
8.3	LIMESTONE HANDLING & SLURRY PREPARATION AREA
8.4	FGD MCC & CONTROL ROOM
8.5	FRP COOLING TOWER AND ACW & DMCW PUMP HOUSE
8.6	FGD TRANSFORMERS
8.7	SWITCHGEAR ROOM FOR FGD TRANSFORMERS

* REFER NOTE No. 10

NOTES:–

1. ALL DIMENSIONS AND CO–ORDINATES ARE IN METER UNLESS NOTED OTHERWISE.
2. THE FINISHED FLOOR LEVEL (FFL) OF POWER HOUSE BUILDING GROUND FLOOR IS EL. 0.00M WHICH CORRESPONDS TO RL 69.5M i.e. 0.5M ABOVE FGL.
3. BOILER AREA FINISHED FLOOR LEVEL IS 200MM BELOW 0.0M i.e. RL 69.3M.
4. TRANSFORMER YARD FINISHED FLOOR LEVEL IS 100MM BELOW 0.0M i.e. RL 69.4M.
5. ASH DYKE LOCATION IN BLOCK–II (CUSTOMER SCOPE) ARE CONSIDERED AS PER DESEIN PLOT PLAN 111–29–0200 R1 DT. 31.12.14 RECD. VIDE MAIL DTD. 09.01.15.
6. BOUNDARY WALL AND DIVERSION OF EXISTING ROADS, NALLAHS, WATER STREAMS & CANALS ARE IN CUSTOMER SCOPE.
7. RIVER WATER INTAKE UPTO IN–PLANT WATER RESERVOIR IS IN CUSTOMER SCOPE.
8. GREEN BELT (CUSTOMER SCOPE) IS SHOWN INDICATIVELY.
9. CHANGES DUE TO INTRODUCTION OF NEW MOEF NORMS AND FGD & SCR FACILITIES (NOT IN PRESENT SCOPE OF WORK) ARE SHOWN INDICATIVELY.

LEGENDS:

- AREA BOUNDARY
- ROAD
- RIVER, STREAM
- DGPS POINT WITH MSL LEVEL — DGPS-5 62.556
- VILLAGE
- PIPE/CABLE RACK
- GREEN BELT
- WATCH TOWER

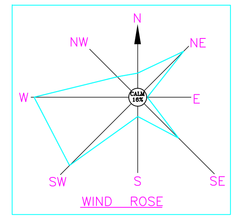

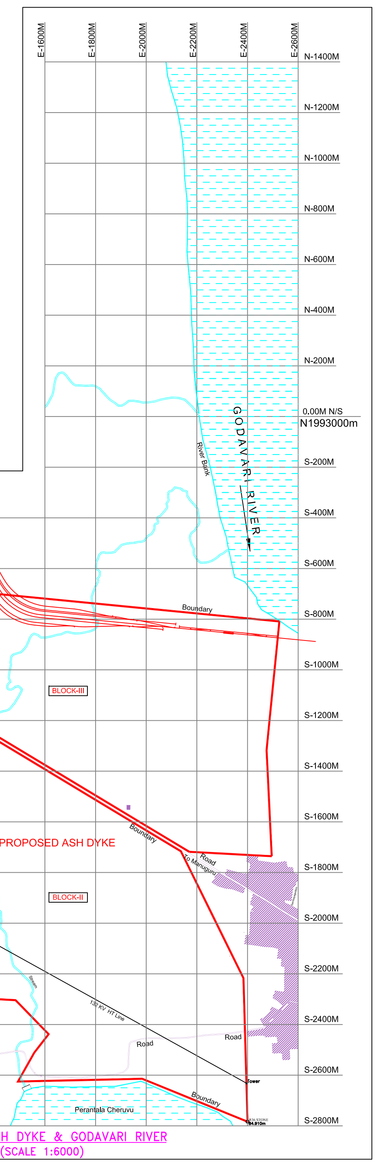

PLAN FOR ASH DYKE & GODAVARI RIVER
(SCALE 1:6000)

PROGRESSIVE DTD. 23.02.18

REV	DATE	ALTD	CHD	APPD
03	29.12.2017	RK	LKJ/SPV	JJ

1. DRG. REVISED CONSIDERING DESEIN COMMENTS VIDE LETTER NO. HYD/1806 Dtd. 19.09.17.
2. FACILITIES 1.1, 1.2, 2.1, 2.2, 2.3, 2.4, 2.9, 2.11, 3.3, 3.4, 4.6, 6.7, 7.1, 8.2, 8.3, 8.6, 8.7, PIPE RACK, PEDESTALS, ROADS & NOTES UPDATED.
3. GRIDING B/W N/S–0M TO S–100M & E/W–0M TO E–1600M REVISED.
4. FACILITY 2.15 & 9.0 DELETED AND 2.10 UPDATED BASED ON MEETING HELD B/W BHEL & CUSTOMER ON 02.12.17.
5. ORIENTATION OF CW CHANNEL FROM NDCT#3 REVISED.

REV	DATE	ALTD	CHD	APPD
02	31.08.2017	RK	LKJ/SPV	JJ

1. FACILITIES 1.1, 1.2, 1.4, 1.5, 1.9, 1.10, 2.1, 2.2, 2.4, 2.6, 2.8, 2.10, 2.11, 3.13, 2.14, 3.2, 3.3, 3.4, 3.5, 4.4(MCC–2), 4.8, 4.10, 4.11, 5.10, 6.3, 6.5, 6.6, 7.1, 7.2, 7.3, 8.1, 8.2, 8.3, 8.4, 8.5, 8.6, 8.7, 9.0, 10.1, WAGHGULING YARD, PIPE RACK AND PATROL ROADS UPDATED.
2. GRIDING B/W N–100M TO S–100M & W–100M TO W–400M, E–200M TO E–300M AND E–200M TO E–400M MODIFIED.
3. CO–ORDINATES INCORPORATED. ROADS & FACILITES B/W E–200M TO E–400M GENERALLY REVISED.
4. FACILITIES 1.7, 1.8, 1.9, 1.10, 2.7, 2.8, 8.1 TO 8.7, 9.1, PIPE & CABLE RACK AND NOTE No. 10 ADDED.

REV	DATE	ALTD	CHD	APPD
01	21.05.2015	RK	LKJ/SPV	JJ

1. DRG. REVISED CONSIDERING DESEIN COMMENTS VIDE LETTER NO. HYD/017 Dt. 30.04.15.
2. FACILITIES No. 2.10, 2.11, 5.1, 5.2, 5.3, 5.4, 5.5, 5.7, 6.1, 6.2 & 6.3 RELOCATED.
3. C.L. OF MAIN PLANT ROADS INCORPORATED.
4. STORAGE SHEDS SHOWN AS FACILITY No. 6.5.
5. FACILITIES 5.3, 5.4 & 5.5 SHOWN AS 1No. FOR ALL UNITS.
6. ACW PUMPS ACCOMMODATED IN CWPH.

CUSTOMER: TELANGANA STATE POWER GENERATION CO. LTD.

CUSTOMER'S CONSULTANT: DESEIN PRIVATE LIMITED

JOB No. 411

STATUS CONTRACT

DISTRIBUTION

TO									
No.OF									

BHADRADRI TPS, UNITS # 1 TO 4 (4X270 MW), MANUGURU, KHAMMAM DISTRICT

BHARAT HEAVY ELECTRICALS LTD
POWER SECTOR
PROJECT ENGINEERING MANAGEMENT
NOIDA

DEPT CODE		NAME	SIGN	DATE
M	DRN	RK	–Sd–	24.04.15
	DESN	RK	–Sd–	24.04.15
	CHD	LKJ/SPV	–Sd–	24.04.15
	APPD	JJ	–Sd–	24.04.15

TITLE: PLOT PLAN

MPL	C	MSE	I	MAX	E	DEPT.
						SIGN
						DATE

SCALE: 1:3000

DRAWING No. PE–DG–411–100–M001

SHEET 1 OF 1 REV 03A

SIZE–A0

COMPUTER FILE NAME: 411-100-M001_R03A.DWG

COPY RIGHT AND CONFIDENTIAL
The information on this document is the property of BHARAT HEAVY ELECTRICALS LIMITED
it must not be used directly or indirectly in any way detrimental to the interests of the company.

SUB-SECTION IIA

GENERAL TECHNICAL REQUIREMENTS (MECHANICAL)

1. REFERENCE DOCUMENTS

A.	ANNEXURE – XIII	:	WATER ANALYSIS
B.	PE-DG-411-164A-A001	:	P & ID FOR EFFLUENT TREATMENT PLANT (ANNEXURE-XII)
C.	DATASHEET – A	:	EFFLUENT TREATMENT PLANT
D.	PE-DG-411-100-M001	:	PLOT PLAN (ANNEXURE-XII)

2. DESIGN REQUIREMENTS

Following effluents will be collected /treated in the Effluent treatment plant. (Please refer the enclosed P & I Diagram for Effluent Treatment Plant for more details):

a) Boiler and TG Area Floor Wash waste
b) Transformer Yard oily waste and Fuel oil area oily waste
c) Boiler Blow down
d) DM regeneration waste
e) ESP area wash water

a) TG and SG Area Floor Wash waste

Effluent waste generated from TG and Boiler area floor wash waste shall be collected in local sump. A separate sump is envisaged for each SG floor wash waste water for each unit. Similarly, a separate sump is envisaged for TG area wash waste water for each unit. This waste contains suspended solids and oil. Further this waste shall be transferred Common Oily Waste Collection Sump located in ETP area for further treatment in lamella clarifier / tube settler. In lamella clarifier / tube settler provision of Alum and PE dosing is envisaged. Oil shall be collected in oil drums and clear water shall be transferred to Central Monitoring Basin (CMB), in addition sludge generated from lamella clarifier / tube settler shall be routed to Sludge collection pit, from there it shall be pumped to Ash Slurry Pump House.

b) Transformer Yard oily waste and Fuel oil area oily waste

For collection of transformer yard area oily waste one pit for each unit is provided. The oily waste from Transformer area and fuel oil area shall be collected in Common Oily Waste Collection Sump located in ETP area for further treatment in lamella clarifier / tube settler as per P & ID attached.

c) Boiler Blow down

For collection of Boiler blow down one pit for each unit is provided. Boiler blow down shall be collected and pumped to cooling tower forebay after quenching. Quenching water shall be drawn from service water system.

d) DM regeneration waste

Neutralized DM plant regeneration waste shall be led to Central Monitoring Basin.

e) ESP area wash water

For floor wash of ESP area one pit for each unit is provided. Washing waste generated in ESP area shall be pumped to ash clarifier.

2.1 CENTRAL MONITORING BASIN (CMB)

Treated water from Lamella Clarifier/ Tube Settler will be collected in CMB. As well as, neutralized regeneration waste from DM plant shall also be routed to CMB. In addition of this, Cooling Tower Blow Down (CTBD) shall also be routed to CMB.

In CMB, there is provision of dosing of acid and alkali for pH correction and also dosing of Sodium Hypochlorite is envisaged for disinfection. Treated water shall be checked for its discharge limits in CMB through effluent recirculation pumps. From there, treated water shall be pumped to Coal Handling plant Area, Horticulture or nearby plant drains depending upon the requirements.

3. TECHNICAL REQUIREMENT OF EFFLUENT TREATEMNT PLANT

3.1 Complete effluent treatment plant shall include associated design for all equipments, mechanical, electrical, control & instrumentation work.

3.2 The effluent water from effluent treatment system / equipments shall meet the guaranteed parameters.

3.3 All the equipments of ETP shall be designed to operate simultaneously.

3.4 All the sumps, tanks, pits, settling ponds, pump house etc shall be RCC construction unless otherwise mentioned.

3.5 All the pumps & drives of ETP shall be provided by bidder with maintenance bay/area.

3.6 Operating platforms shall be provided by bidder for all the structures such as flash mixer, flocculation chamber, Tube Settlers/Lamella Clarifiers, with ladders and hand railing. All the sumps, tanks, reservoirs and other water retaining structures shall be provided with access ladders/rungs from operating platforms/ground level as the case may be and de-watering pits one for each section. Supply and erection of hand railing will be bidder's scope.

3.7 All the tanks shall be provided by bidder with vent, overflow, drain and sample connections. Effective capacity for chemical tanks & water retaining structures/ tanks/sumps means the capacity between the bottoms of the overflow nozzle to the top of the outlet nozzle. Outlet nozzle centre line shall be kept at least 200 mm from the Invert Level of the chemical tanks / water retaining structures / tanks/sumps. A minimum free board of 300 mm shall be provided in all the water retaining structures of ETP above the maximum water level / overflow level as the case may be excluding the thickness of the slab / beam thickness if any.

3.8 All effluent sumps shall be covered by bidder at top as per requirement.

3.9 Maximum operating speed of all the pumps shall be limited to 1500 rpm or less unless specified otherwise.

3.10 Minimum thickness of atmospheric steel and non-metallic tanks shall be 6 mm.

3.11 LAMELLA CLARFIER / TUBE SETTLER

3.11.1 The tube settler/ Lamella Clarifier shall be capable of handling the specified design flow rate and producing effluent water quality as indicated datasheet A and ANNEXURE-III.

3.11.2 Tube settler / Lamella Clarifier shall be provided by bidder with one flash mixer and Flocculation.

3.11.3 Chemical shall be added to the wastewater in the flash mixer. Flash mixer shall be circular/rectangular type. Water from the flash mixer shall flow to adjacent flocculation chamber by gravity. Suitable mechanical stirrer, driven by electric motor through speed reducing gearbox, shall be provided in flash mixer to ensure adequate mixing of chemicals Flash mixer shall provide minimum one-minute storage at the design flow rate of the flash mixer.

3.11.4 Water from flash mixer shall flow to a flocculation chamber by gravity. Adequate retention time (minimum 10-minute storage at the design flow rate) shall be provided for the incoming water to allow formation of uniform flocks. The flocculation chamber shall be of circular/rectangular type with suitable mechanical agitator driven by electric motor through speed reducing gearbox. Water from the bottom of flocculation chamber shall flow to the Tube Settler / Lamella Clarifier by gravity. Designs with flocculation chamber and separator integral in the same unit are also acceptable.

3.11.5 The tube settler/ Lamella Clarifiers shall be provided with walkway (bridge) and platform to approach all the internals. Clear width of the bridge shall not be less than 1200 mm.

3.11.6 All metallic parts inside the tube settler/ Lamella Clarifiers coming in contact with water shall be painted with three (3) coats of epoxy paint over one (1) coat of primer to prevent corrosion Total thickness 300 micron. Other components shall be painted with one coat of red lead primer and three coats of suitable rust preventing paint Total thickness 200 micron.

3.11.7 Design of the sludge removal system should be such as to reduce loss of water during sludge blow off within 5% of rated flow.

3.11.8 The tube settler/ Lamella Clarifiers periphery shall have sufficient width to have an easy walkway along-with hand-railing for general inspection. Access ladders (at least from two locations) with platforms and hand-railing shall be provided by bidder in the separator for good approach. However, the manual sludge valves shall be operable from the top of the sludge chamber through head stock and extended spindle arrangement.

3.11.9 Suitable sampling connections shall be provided for performance monitoring.

3.11.10 The tube settler/ Lamella Clarifiers shall be circular / rectangular with distinct tube /plate separation zones, sludge thickener zone, clear water zone and oil skimming zone. The tube settler/ Lamella Clarifiers shall be counter flow or cross flow type. Co-flow type units are not acceptable.

3.11.11 The unit shall be designed with minimum side water depth of 4 M. The overall area of unit shall be based on an average flow velocity not more than 5 m3/hr/m2

3.11.12 The inclined tubes/plates shall be spaced so that stable flow conditions are available. The flow through the tube/plates shall be viscous / laminar. The cross sectional area of each tube shall be such that the

effective hydraulic diameter is 80 mm (min). The material of tube pack shall be UV inhibited virgin PVC.

3.11.13 In case of plate type separator, the distance between the successive plates shall be 50 mm (min). The plates shall be made of GRP (glass reinforced plastic). The resin for the manufacturing of GRP plates shall be orthophthallic type.

3.11.14 The length of the tubes/plates through which the water flow shall not be less than 1.5 M.

3.11.15 The tubes/plates shall be inclined by 50-80 deg. angle to the horizontal. The tubes/plates shall be arranged such that the complete water travels through all the tubes across the cross section of separator.

3.11.16 To remove settled particles from the plates/tubes suitable water jet arrangement shall be provided by bidder. Pumping and piping arrangement shall be separately provided for this purpose if required. The tube/ plates shall be easily accessible for the cleaning purpose. The tube pack / plates shall be placed inside the separator such that these may be individually removed for maintenance even when separator is operating.

3.11.17 The entire pack shall be rigid and shall not deflect by self-weight, water load or operator movement over the pack. Special features of pack/plate support arrangement and maintenance shall be brought out in the bid.

3.11.18 Treated water shall be collected in a trough provided with adjustable weir.

3.11.19 The unit shall be capable of delivering constant effluent water quality without any sludge/oil carryover, even at the time of rapid increase in influent water flow or change in influent water quality, or changes in raw water temperature.

3.11.20 The bidder shall justify the design basis of entire plate/tube type separator unit and individual components of the entire unit with backup calculations and also by means of supplying documentary evidence from their earlier installed plants in the form of drawings, certificates, etc.

3.11.21 The tube settler/ Lamella Clarifiers shall employ positive removal system of consistent density, central sludge concentrating sump, water flushing nozzles etc. as per the standard design of manufacturer. Sludge removal system shall be designed to thicken the sludge to minimum 2% consistency before disposing from separator bottom. All the pipelines carrying the sludge shall be provided with flushing connection. The pumps and piping if required for flushing purpose shall also be separately provided. Angle of inclination of sludge hopper shall be minimum 55 deg. to horizontal plane for effective collection of sludge.

3.11.22 Sludge blow-off shall be affected by the static head of water in the Tube settler/ Lamella Clarifier. Sludge outlet pipe from the concentrated sludge hopper shall be branched into main disposal line. Main sludge disposal line should consist of blow-off valve which would be operated manually and drain sludge to the sludge disposal sump. This would be an intermittent operation. Continuous sludge disposal line shall consist of a telescopic stand pipe, the top of which would be maintained at a desired elevation to ensure trickle flow of water of sludge water mixture to the sludge sump. Sludge shall be led into sludge sump provided for lamella clarifier sludge.

The design criteria of lamella clarifier / tube settler shall be as per following:

Parameter	Maximum inlet value	Outlet value
Oil (Free) and grease	50 ppm	10 ppm
TSS	500 ppm	10 ppm

OUTLET GUARANTEE PARAMETERS:

- Effluent TSS: 10 ppm at design flow
- Effluent TSS: 15 ppm at 20% overflow condition.
- Effluent Oil & grease: 10 ppm (maximum)

3.12 OTHER REQUIREMENTS

3.12.1 The lining shall be of rubber having hardness of 65+/-5 shore – A meeting the requirements of IS 4682 Part – 1. The lining shall be applied in three layers, resulting in a total thickness of not less than 4.5 mm anywhere on the internal surfaces of the vessels. The lining shall extend over full face of all flanged connections and shall have a minimum thickness of 3 mm in all such external areas.

3.12.2 Bidder to note that sluice / isolation gates are not part of civil work and all sluice gates shall be in the scope of bidder.

3.12.3 Bidder has to take care for all equipments / items those are open to sky and required weather and dust proof.

3.12.4 The effluent treatment plant should be designed to operate under all operating condition of inlet and outlet values.

3.12.5 Temperature of influent in Boiler blow down sump and Transformer Yard Oily Waste collection pit may reach upto 90 ^{O}C. Hence Bidder to select Pumps, valves, fittings, piping, instruments etc. accordingly.

SUB-SECTION IA

SPECIFIC TECHNICAL REQUIREMENTS (MECHANICAL)

1.0 GENERAL

This specification is intended to cover for SUPPLY PART , SERVICES PART & MANDATORY SPARES comprising of design (i.e. Preparation and submission of drawing/ documents including " As Built " drawings and O&M Manuals) , engineering, manufacture, fabrication, assembly, inspection / testing at vendor's & sub-vendor's works, painting, maintenance tools & tackles (as applicable), filling of lubricants & consumables, chemicals as specified, mandatory spares along with spares for erection ,startup and commissioning as required, forwarding, proper packing, shipment and delivery at site, unloading, handling, transportation & storage at site, in site transportation, assembly, minor civil works, erection & commissioning, trial run at site, preparation of drawings in 3D (if applicable) and carry out performance guarantee /Functional / Demonstration tests at site (As applicable), training of customer/ client O&M staff (if applicable) & final handing over to end customer in flawless condition for project and **EFFLUENT TREATMENT PLANT** complete with all accessories for the total scope defined as per BHEL NIT & tender technical specification, amendment & agreements till placement of order for **4X270 MW BHADRADRI TPS.**

2.0 SCOPE OF SUPPLY (MECHANICAL)

Broad scope of supply for this package is detailed below and as indicated in relevant portion of this specification.

2.1 Two (2) nos. (1W+1S) effluent transfer pumps for transformer yard oily waste of unit 1 complete with all instrumentation, valves, piping, fittings, motor etc.

2.2 Two (2) Nos. (1W+1S) effluent transfer pumps for transformer yard oily waste of unit 2 complete with all instrumentation, valves, piping, fittings, motor etc.

2.3 Two (2) Nos. (1W+1S) effluent transfer pumps for transformer yard oily waste of unit 3 complete with all instrumentation, valves, piping, fittings, motor etc.

2.4 Two (2) Nos. (1W+1S) effluent transfer pumps for transformer yard oily waste of unit 4 complete with all instrumentation, valves, piping, fittings, motor etc.

2.5 Two (2) Nos. (1W+1S) Boiler Floor Wash Water Transfer pumps Unit-1 with all instrumentation, valves, piping, fittings, motor etc.

2.6 Two (2) Nos. (1W+1S) Boiler Floor Wash Water Transfer pumps Unit-2 with all instrumentation, valves, piping, fittings, motor etc.

2.7 Two (2) Nos. (1W+1S) Boiler Floor Wash Water Transfer pumps Unit-3 with all instrumentation, valves, piping, fittings, motor etc.

2.8 Two (2) Nos. (1W+1S) Boiler Floor Wash Water Transfer pumps Unit-4 with all instrumentation, valves, piping, fittings, motor etc.

2.9 Two (2) Nos. (1W+1S) TG Floor Wash Water Transfer pumps Unit-1 with all instrumentation, valves, piping, fittings, motor etc.

2.10 Two (2) Nos. (1W+1S) TG Floor Wash Water Transfer pumps Unit-2 with all instrumentation, valves, piping, fittings, motor etc.

2.11 Two (2) Nos. (1W+1S) TG Floor Wash Water Transfer pumps Unit-3 with all instrumentation, valves, piping, fittings, motor etc.

2.12 Two (2) Nos. (1W+1S) TG Floor Wash Water Transfer pumps Unit-4 with all instrumentation, valves, piping, fittings, motor etc.

2.13 Two (2) Nos. (1W+1S) Floor Wash Water Transfer pumps for ESP area unit-1 with all instrumentation, valves, piping, ventury mixer, fittings, motor etc.

2.14 Two (2) Nos. (1W+1S) Floor Wash Water Transfer pumps for ESP area unit-2 with all instrumentation, valves, piping, ventury mixer, fittings, motor etc.

2.15 Two (2) Nos. (1W+1S) Floor Wash Water Transfer pumps for ESP area unit-3 with all instrumentation, valves, piping, ventury mixer, fittings, motor etc.

2.16 Two (2) Nos. (1W+1S) Floor Wash Water Transfer pumps for ESP area unit-4 with all instrumentation, valves, piping, ventury mixer, fittings, motor etc.

2.17 Two (2) Nos. (1W+1S) Boiler Blow Down Transfer pumps for unit-1 with all instrumentation, valves, piping, fittings, motor etc.

2.18 Two (2) Nos. (1W+1S) Boiler Blow Down Transfer pumps for unit-2 with all instrumentation, valves, piping, fittings, motor etc.

2.19 Two (2) Nos. (1W+1S) Boiler Blow Down Transfer pumps for unit-3 with all instrumentation, valves, piping, fittings, motor etc.

2.20 Two (2) Nos. (1W+1S) Boiler Blow Down Transfer pumps for unit-4 with all instrumentation, valves, piping, fittings, motor etc.

2.21 Two (2) Nos. (1W+1S) Common Oily Waste Transfer pumps with all instrumentation, valves, piping, fittings, motor etc.

2.22 Two (2) Nos. (1W+1S) Sludge Transfer pumps with all instrumentation, valves, piping, fittings, motor etc.

2.23 Two (2) Nos. (1W+1S) Effluent Recirculation pumps for Central Monitoring Basin (CMB) with all instrumentation, valves, piping, fittings, motor etc.

2.24 Two (2) Nos. (1W+1S) Effluent Transfer pumps I for Central Monitoring Basin (CMB) with all instrumentation, valves, piping, fittings, motor etc.

2.25 Two (2) Nos. (1W+1S) Effluent Transfer pumps II for Central Monitoring Basin (CMB) with all instrumentation, valves, piping, fittings, motor etc.

2.26 Two (2) Nos. (1W+1S) Effluent Transfer pumps III for Central Monitoring Basin (CMB) with all instrumentation, valves, piping, fittings, motor etc.

2.27 One (1) no. LAMELLA CLARIFIER/TUBE SETTLER along with flocculation tank, flash mixer, agitator, flocculator, fittings, oil skimmer, sludge trolley, media, plate packs, oil collection drum and all other accessories.

2.28 One no. Alum dosing tank for lamella clarifier / tube settler including slow speed gear operated agitator driven by motor complete with overflow seal, integral pipe works, dissolving basket, filling connection, valves, instrumentation and all other accessories required.

2.29 Two (2) (1W+1S) nos. pumps of positive displacement type suitable for dosing alum at design dosage rate specified and head as required. Pumps shall be provided with accessories such as Y-type suction strainers, pressure dampeners, safety relief valves, valves, instrumentation, fittings etc. as required for lamella clarifier / tube settler.

2.30 One no. PE dosing tank for lamella clarifier / tube settler including slow speed gear operated agitator driven by motor complete with overflow seal, integral pipe works, filling connection, valves, instrumentation and all other accessories required.

2.31 Two (2) (1W+1S) nos. pumps of positive displacement type suitable for dosing PE at design dosage rate specified and head as required. Pumps shall be provided with accessories such as Y-type suction strainers, pressure dampeners, safety relief valves, valves, instrumentation, fittings etc. as required for lamella clarifier / tube settler.

2.32 One no. NaOCl dosing tank for Central Monitoring Basin (CMB) including slow speed gear operated agitator driven by motor complete with overflow seal, integral pipe works, dissolving basket, filling connection, valves, instrumentation and all other accessories required.

2.33 Two (2) (1W+1S) of positive displacement type suitable for dosing NaOCl at design dosage rate specified and head as required in CMB. Pumps shall be provided with accessories such as Y-type suction strainers, pressure dampeners, safety relief valves, valves, instrumentation, fittings etc. as required.

2.34 Two nos. (2X100%) Air Blowers (Centrifugal /Twin Lobe Type) for Sludge Collection pit along with suction filter, silencer, motors, piping, valves, fittings, instrumentation, acoustic chamber and accessories associated with the same.

2.35 One no. acid dosing tank for CMB with fume absorber, overflow seal, integral pipe works, filling connection, valves, instrumentation and all other accessories required.

2.36 Two (2) (1W+1S) of positive displacement type suitable for dosing acid at design dosage rate specified and head as required in CMB. Pumps shall be provided with accessories such as Y-type suction strainers, pressure dampeners, safety relief valves valves, instrumentation, fittings etc. as required.

2.37 One no. alkali dosing tank for CMB including slow speed gear operated agitator driven by motor complete with overflow seal, integral pipe works, CO_2 absorber, dissolving basket, filling connection, valves, instrumentation and all other accessories required.

2.38 Two (2) (1W+1S) of positive displacement type suitable for dosing alkali at design dosage rate specified and head as required in CMB. Pumps shall be provided with accessories such as Y-type suction strainers, pressure dampeners, safety relief valves valves, instrumentation, fittings etc. as required.

2.39 One no. PLC based control system along with accessories located inside ETP area.

2.40 Two nos. RIO panels are in bidder's scope for all effluent lifting sumps located outside boundary of ETP area.

2.41 3.0 km fiber optical cable are in bidder's scope for communication between RIO panels and PLC

located in ETP area.

2.42 Bidder to take care the length of piping as included elsewhere in specification of Effluent Treatment plant. Pipe routing shall be decided during detailed engineering, however bidder will consider 13.5 m (or 12 m, as per availability of pipe racks) static head + 10% margin during pump selection for outside ETP area, Sludge transfer pumps, ESP waste water transfer pumps, Boiler Blow down transfer pumps and Effluent transfer pumps for CMB.

2.43 Pipe racks shall be provided by BHEL wherever available. However, where pipe racks are not available the pipe shall run on pipe pedestals. All auxiliary steel structures (U-clamps, nuts, bolts, channels etc.) for fixing the pipe on the pedestal or trestles shall be in the scope of bidder. If buried piping is required, Wrapping, coating and protection of the entire buried pipe is also in bidder's scope & shall be as per IS 10221.

2.44 All steel inserts plates with lugs, rungs, ladder, puddle pipes, bolts, edge angle in desired shape, nuts, sleeves, and all other embedding components etc as required to grout in BHEL civil works and to support/hold the equipments to being supplied under this specification shall be in bidder's scope.

2.45 Any statutory clearance required for the system from MOEF or local pollution control board in bidder's scope.

2.46 Initial charge of all lubricants & grease in bidder's scope.

2.47 All motorized valves shall be provided with integral starter.

2.48 Instrument hook up material shall be in bidder's scope.

2.49 Edge angle required in a proper shape for edge protection in civil works will be provided by bidder.

2.50 The pipe sizes indicated in the tender specification/ P & I diagram are minimum. Wherever pipe sizes are not indicated, the same shall be selected based on the specification requirement and shall be subject to BHEL / customer approval during detailing engineering. All pipes shall be carbon steel unless exclusively mentioned.

2.51 All necessary drains, vents and sampling points with valves as specified and as required are in bidder's scope.

2.52 Monitoring gadgets, instruments and equipments required for maintenance (till demonstration test & plant handover).

2.53 Associated piping, instrumentation and valves required for the system.

2.54 All necessary instruments and controls required for easy and safe operation of the system.

2.55 Wherever terminal points between BHEL and bidder indicated, bidder shall provide pipes with counter flange.

2.56 All pipes, fittings etc. required for hand railing, platforms, and ladders shall be in the scope of bidder. All ladders shall be non-civil work. All insert plates, nuts and bolts, puddle pipes, counter flanges wherever applicable shall be in the scope of bidder. Supply and erection of Hand railing as desired for safety purpose will be in bidder's scope.

2.57 All the sumps, tanks, reservoirs and other water retaining structures shall be provided with access ladders/rungs from operating platforms/ground level as the case may be and de-watering pits one for each section (civil work by BHEL).

2.58 Two sets of safety equipment each comprising PVC protection suits with hoods, rubber boots, face visors and thick PVC gauntlets shall also be provided by the bidder. One nos. personnel water drench safety shower and eye bath shall be provided by the bidder near acid alkali handling area.

2.59 Instrumentation, valves etc. indicated in P & ID of effluent treatment plant are bare minimum requirement, however bidder has to provide complete system for trouble free operation meeting technical specification requirement.

2.60 Effluent lifting sumps E1, E2, E3, E4, E5, E6, E7, E8, E9, E10, E11, E12, E13, E14, E18, E19, E20, E21, E22 and E23 shall be located outside ETP area however rest facilities indicated in P & ID of ETP shall be located inside ETP area provided in plot plan included in this specification.

2.61 All blank flanges/counter flanges, isolations valves, tees etc. to interconnect the pipes at all terminal points.

2.62 Mandatory spares as per list attached in ANNEXURE VI.

2.63 Special tools and tackles as required for the system. Refer ANNEXURE VIII

2.64 All special tools necessary for proper maintenance or adjustment of the equipment packaged in permanent box. Finish paints for touch-up painting of equipment after erection at site in sealed container.

2.65 Start-up and commissioning spares as required.

2.66 All the first fill and one Year's topping requirements of consumable such as greases, oil, lubricants, servo fluids/control fluids, gases and etc. which will be required to put the equipment covered under

the scope of specifications, into successful commissioning / initial operation and to establish completion of facilities shall be furnished by the bidder. Suitable standard lubricants as available in India are desired. Efforts should be made to limit the variety of lubricants to minimum.

2.67 Electric hoist and chain pulley block as per specification requirement.

2.68 Grouting of equipments and grouting material is in bidder's scope.

2.69 All pipes, fittings etc. required for hand railing, platforms, and ladders shall be in the scope of bidder. All ladders shall be non-civil work. Supply and erection of Hand railing as required for safety purpose will be in bidder's scope. All handrails shall be of 32 mm nominal bore MS pipes (medium class) as per ASTM A 500 or equivalent international standard galvanized using 750 gm. / sq. m of zinc. Hand railing shall be a two-rail system with the top rail 1000 mm above the walkway surface and the intermediate rail 450 mm below the top rail. Handrail post spacing shall be limited to 1500 mm as far as possible but can be proportioned to the length of the opening. In such a case spacing shall not exceed 1850 mm center to center of posts. Hand railing shall be shop fabricated for specific locations and field welded or bolted to the erected structural steel. Railings shall be provided with 100 mm wide and 8 mm thick MS strip at bottom as toe guard all along the length of railing in horizontal plane. For RCC stairs, hand railing with 20 mm square MS bar balustrade with suitable MS flat and Aluminum/ Teakwood handrail shall be provided, unless specifically mentioned otherwise.

2.70 PIPING

2.70.1 Complete piping indicated in P & ID (Refer ANNEXURE XII) of Effluent treatment plant is in bidder's scope of supply and erection. In addition, any additional piping required to make the system complete inside ETP area shall be in bidder's scope. Pipe length inside ETP area has to be considered by bidder in their scope suitably.

2.70.2 Pipe distances from sumps outside ETP area upto inside ETP area and inside ETP area to respective location have been indicated in P & ID. Bidder to note that no commercial settlement / adjustment shall be entertained for variation upto +/- 10% of pipe lengths during detailed engineering.
Distances given are from one area to other area only, however inside piping in respective area shall be in bidder's scope which has to be suitably consider by bidder as additional.

2.71 Two (1W+1S) Flushing pumps along with all instrumentation, valves, piping, fittings, motor etc.

2.72 Isolation gates as per P & ID enclosed.

2.73 Bidder to adhere Format of operation and maintenance manual requirement as per Annexure IX during detailed engineering.

2.74 Bidder to adhere site storage and preservation requirement as per Annexure X during detailed engineering.

2.75 Bidder to adhere site General technical requirement as per Annexure XI during detailed engineering.

2.76 Bidder to refer Plot plan attached (Refer ANNEXURE XII) with this section. Location of effluent sumps is located in plot plan along with tentative routing for bidder's information.

2.77 Bidder to refer Annexure III for Functional / performance / demonstration guarantee requirements.

2.78 Bidder to refer Annexure XIII for water analysis.

2.79 Sumps E1, E2, E3, E4, E5, E6, E7, E8, E9, E10, E11, E12, E13, E14, E15, E16, E17, E18, E19, E20, E21, E22 and E23 (RCC work by BHEL) along with piping, valves, fittings, instrumentation and associated accessories.

2.80 Bidder to refer datasheet A for technical requirements.

3.0 SCOPE OF SUPPLY (ELECTRICAL)

Complete electrical as per specification / details indicated in Sub Section IB and IIB.

4.0 SCOPE OF SUPPLY (C&I)

Complete C&I as per specification / details indicated in Sub Section IC and IIC.

5.0 SCOPE OF SUPPLY (CIVIL)

Total Civil is in BHEL Scope of work, however Civil Input drawing shall be provided by bidder.

6.0 SCOPE OF SERVICE

The bidder's scope also includes following services for scope under this specification:

a. Unloading, Storage, handling and transportation at site.

b. Minor civil work like chipping of foundation, grouting below base plate for all structures, equipment, grouting of anchor bolts wherever these are not placed in the foundation during casting of foundation itself, excavation & filling of earth for buried pipes if and as required. To the extent possible, vendor shall ensure to supply all foundation bolts timely so as to facilitate placement of these bolts while casting the foundation. Wrapping, coating and protection of all the buried pipe shall be as per IS 10221.

c. Pre- Commissioning work such as flushing, hydraulic testing etc. Necessary consumables and instrumentation as required for inspection and testing at works as well as at site including pre-commissioning activities shall be arranged by the successful bidder at their own cost.

d. Erection and Commissioning of entire Effluent Treatment Plant.

e. Arrangement of all lubricants, instruments, reagents for carrying out trial run, commissioning and demonstration test.

f. Monitoring gadgets, instruments and equipment required for maintenance (till demonstration test & Plant Hand over).

g. All personnel required during commissioning, trial run and demonstration Test.

h. Trial run for requisite period.

i. Performance testing.

j. Training of plant Owner's personnel, O&M operators' personnel on plant operation and maintenance.

k. All other facilities/ services as described in section on site services in specification and related to Effluent Treatment Plant scope of work.

l. Relevant requirements as per GTR, GCC, ECC & SCC.

m. Any other service required for making the installation complete in all respect within battery limits and for satisfactory erection & commissioning of the system as well as to meet any statutory requirement relevant to the package, unless specifically excluded from scope of services.

n. Painting as per enclosed painting schedule ANNEXURE V. However, any variation in the painting schedule as finally approved by customer / BHEL shall be taken care by bidder without any commercial and delivery implication. Colour-coding scheme shall be intimated to vendor during detailed engineering.

7.0 TERMINAL POINTS

a. Service water line (50 NB) will be provided by BHEL at 5 m distance from ETP area. Further distribution inside ETP area will be in bidder's scope. Bidder to note that pressure available at terminal point for service water will be 2 kg/cm2 approx (max.); hence bidder will take care for their pump lubrication / cooling accordingly.
b. Instrument air pipe (25 NB) will be provided by BHEL at 5 m distance from ETP area. Further distribution inside ETP area will be in bidder's scope, if required.
c. Service air pipe (25 NB) will be provided by BHEL at 5 m distance from ETP area. Further distribution inside ETP area will be in bidder's scope, if required.
d. DM plant regeneration waste shall be terminated by DM plant vendor in CMB.
e. Fuel oil waste shall be terminated by Fuel oil vendor in Common oily waste collection sump.

8.0 EXCLUSIONS

7.1 All civil works including foundation of equipment, excavation & back filling. However complete grouting for equipment, grouting material, fixing and any concreting inside vessels and lining shall be in the scope of the bidder.
7.2 Main pipe trestles.
7.3 Air conditioning, ventilation & firefighting facilities.
7.4 Other exclusions are mentioned in the electrical & C&I parts of this specification.
7.5 Acid, alkali, PE, NaOCI, and alum Chemicals.

9.0 QP AND SUBVENDOR APPROVAL:

8.1 Minimum QP requirements are specified as Annexure I. However, any additional comments as given by BHEL/Customer shall be adhered by the bidder without any commercial & delivery implication to BHEL.
8.2 The sub vendor list (Annexure- II) enclosed is indicative only and is subject to BHEL and Customer approval during detailed engineering stage without any commercial & delivery implication to BHEL.
8.3 Bidder to propose sub vendor list with following back up documents within 4 weeks of placement of LOI/LOA. Thereafter no request for additional sub-vendor shall be entertained. The sub vendor list shall subject to BHEL and Customer approval during detailed engineering stage without any commercial & delivery implication to BHEL.
8.4 Bidder to assess the capability of their proposed sub-vendors in terms of preparation of drawings, calculations, documents, quality assurance, supply of material etc. as per project schedule before placing the order on them.
8.5 Dealers are not acceptable for any item of the package. Bidder shall procure all items including plates, structural, flanges; counter flanges etc. from approved sub vendor only.

10.0 DESIGN /CONSTRUCTION

In addition to the requirements of Section I and II the following shall also be complied under scope of this specification.

The P&I diagram is enclosed herein in this section for bidder's compliance.

The material of construction specified in data Sheet-A are minimum requirements and material of construction for other components not specified shall be similarly selected by the bidder for intended duty which shall be subject to BHEL / Customer approval during detail engineering without any commercial & delivery implication to BHEL.

11.0 INFLUENT QUALITY AND OUTLET GUARANTEE PARAMETERS:
10.1 INFLUENT QUALITY:

a) FREE OIL & FLOATING OIL IN LAMELLA CLARIFIER / TUBE SETTLER: 50 PPM
b) TSS IN LAMELLA CLARIFIER / TUBE SETTLER: 500 PPM
c) TSS FROM DM PLANT REGENERATION WASTE: 200 PPM
d) TDS FROM DM PLANT REGENERATION WASTE: 1400 TO 6000 PPM
e) CLARIFIED WATER WILL BE USED FOR WASHING

10.2 OUTLET GUARANTEE PARAMETERS:
a) OIL QUANTITY AT LAMELLA CLARIFIER / TUBE SETTLER OUTLET: As per Annexure III
b) TSS AT LAMELLA CLARIFIER / TUBE SETTLER OUTLET: As per Annexure III

12.0 DRAWING/DOCUMENTS REQUIREMENT

11.1 For the Drawings/Documents distribution Procedure, please refer attached Annexure-IV. Bidder has to submit the revised drawing/document along with the compliance sheet indicating enumerate reply to all BHEL and customer comments or observations. Without compliance sheet the submission of the drawings/documents will not be considered and the delay on this account will be solely on bidder's side only. The numbers of soft copies & hard copies of drawing/documents to be submitted by the bidder shall be as per enclosed Annexure-IV.

11.2 After award of LOI/LOA, drawing/documents to be submitted by the bidder for BHEL/Customer approval has been indicated in Annexure VII. However, any additional drawing/document if found necessary for completion of the engineering, the same shall be submitted by bidder without any commercial & delivery implication to BHEL.

11.3 Bidder to note that the successful bidder, during detail engineering, will submit the drg/doc through web based Document Management System in addition to hard copies to be submitted as per the Annexure IV of this specification. Bidder would be provided access to the DMS for drg/doc approval and adequate training for the same. Detailed methodology would be finalized during the kick-off meeting. Bidder to ensure following at their end:

- Internet explorer version – Minimum Internet Explorer 7
- Internet speed – 2 mbps (Minimum preferred)
- Pop ups from our external DMS IP (124.124.36.198) should not be blocked
- Vendor's Internal proxy setting should not block DMS application's link (http://124.124.36.198/wrenchwebaccess/login.aspx)"
- DMS user manuals to be used by BHEL PEM vendors for uploading, viewing, revising, commenting and tracking documents on PEM's DMS have been uploaded on PEM internet website (www.bhelpem.com) under the Vendor session.
- For quick access bidder may refer the link http://bhelpem.com/DMSManuals/DMSManuals.html

13.0 SPARES

The Bidder shall include in his scope of supply all the necessary Mandatory spares, start up and commissioning spares as indicated in the relevant sections of specifications. The general requirements pertaining to the supply of these spares is given below: -

12.1 MANDATORY SPARES

a. The list of mandatory spares which is to be considered by bidder in their scope are indicated in Annexure VI.

b. All mandatory spares shall be delivered at site at least two months before scheduled date of initial operation of the first unit. However, spares shall not be dispatched before dispatch of corresponding main equipments.

c. Wherever quantity is specified both as a percentage and a value, the Bidder has to supply the higher quantity until and unless specified otherwise.

d. Inspection of mandatory spares shall be in line with the approved quality plans for the respective items/equipments. The inspection categorization of mandatory spares shall also be in line with the approved Categorization plan for the respective items/equipment.

12.2 START-UP & COMMISSIONING SPARES

a. Start-up and commissioning spares are those spares which are required during the start-up and commissioning of the equipment/system. All spares used till the plant is handed over to the BHEL/Customer shall come under this category. The Bidder shall provide for an adequate stock of such start up and commissioning spares to be brought by him to the site for the plant erection and commissioning. They must be available at site before the equipments are energized. The unused spares, if any, should be removed from there only after the issue of Taking Over certificate. All start up spares which remain unused at the time shall remain the property of the Bidder.

b. The Bidder shall indicate the service expectancy period for the spares under normal operating conditions before replacement is necessary.

c. All spares supplied under this contract shall be strictly inter changeable with the parts for which they are intended for replacements. The spares shall be treated and packed for long storage under the climatic conditions prevailing at the site e.g. small items shall be packed in sealed transparent plastic with desecrator packs as necessary.

d. All the spares (mandatory) shall be manufactured along with the main equipment components as a continuous operation as per same specification and quality plan.

e. Each spares part shall be clearly marked or labelled on the outside of the packing with its description. When more than one spares part is packed in a single case, a general description of the content shall be shown on the outside of such case and a detailed list enclosed. All cases, containers and other packages must be suitably marked and numbered for the purposes of identification.

f. All cases, containers or other packages are to be opened for such examination as may be considered necessary by BHEL / Customer.

g. The Bidder will provide the BHEL/Customer with all the addresses and particulars of his sub suppliers while placing the order on vendors for items/components/equipments covered under the contract and will further ensure with his vendors that the BHEL/Customer, if so desires, will have the right to place order for spares directly on them on mutually agreed terms based on offers of such vendors.

h. The Bidder shall warrant that all spares supplied will be new and in accordance with the contract Documents and will be free from defects in design, material and workmanship.

i. The bidder to provide datasheets/assembly drawings of the manufacturer/ any other relevant document showing Bill of Material(s), Make, Model Number, Part Number etc. through which the mandatory spares to be supplied can be uniquely identified.

Any other documents submitted by bidder except as asked in the bid's specification shall not be evaluated & considered as null & void.

10.3 ADDITIONAL REQUIREMENT

- Lamella clarifier dosing system and dosing system for CMB shall be located in side industrial shed. Rest all equipment / facilities shall be located outside open to sky.
- Control room and MCC room shall be located inside single story RCC building. Chemical storage for alum, PE, NaOCI, acid & alkali shall be located in side industrial shed adjacent to control room for 15 days.
- Bidder to submit BBU during detailed engineering after approval of Basic documents. BBU shall be equal to BOQ for the package and there shall be no price and delivery implication is applicable to BHEL / customer for the same. None of the items supplied for the project as non-billable. Incomplete BBU shall not be review by BHEL. Further during detail engineering breakup of supply prices of Effluent treatment plant in the Billing break up schedule shall be prepared for billing purpose as per below mentioned details:

1.0	**THE BREAK UP (%) OF SUPPLY PRICES OF EFFLUENT TREATMENT PLANT IN THE BBU SHALL BE IN LINE WITH THE BELOW PROVIDED DETAILS:**	
1.1	Lump sum firm price for supply of Atmospheric tanks and pressure vessels (if applicable) along with accessories inclusive of all taxes, duties and other levies as applicable.	4% of Total Supply Price.
1.2	Lump sum firm price for supply of Valves inclusive of all taxes, duties and other levies as applicable.	10% of Total Supply Price.

1.3	Lump sum firm price for supply of Instruments & analysers inclusive of all taxes, duties and other levies as applicable.	24% of Total Supply Price.
1.4	Lump sum firm price for supply of Pumps & Blowers with motor inclusive of all taxes, duties and other levies as applicable.	21% of Total Supply Price.
1.5	Lump sum firm price for supply of Piping & Fittings inclusive of all taxes, duties and other levies as applicable.	15% of Total Supply Price.
1.6	Lump sum firm price for supply of lamella clarifier / tube settler plates & media, agitators, strainers along with accessories inclusive of all taxes, duties and other levies as applicable.	3% of Total Supply Price.
1.7	Lump sum firm price for supply of PLC system ,UPS with battery & battery charger, ACDB & BHMS (as applicable) inclusive of all taxes, duties and other levies as applicable.	12% of Total Supply Price.
1.8	Lump sum firm price for supply of Balance Miscellaneous items inclusive of all taxes, duties and other levies as applicable.	11% of Total Supply Price.

- Any statutory requirement / clearance required for the package from government / local body shall be in bidder's scope.
- All interconnecting piping, valves, fittings including dosing piping, drain piping from tanks to nearby drain, flushing lines from nearest available water source, valves, fittings and accessories is also in bidder's scope.
- All the vertical pumps shall be self-lubricating type.
- Document approval by customer under Approval category or information category shall not absolve the vendor of their contractual obligations of completing the work as per specification requirement. Any deviation from specified requirement shall be reported by the vendor in writing and require written approval shall be taken from BHEL. Unless any change in specified requirement has been brought out by the vendor during detail engineering in writing while submitting the document to customer for approval, approved document (with implicit deviation) will not be cited as a reason for not following the specification requirement.
- KKS numbering if required, as per BHEL/Customer requirement shall be provided by the Bidder during detailed engineering stage without any commercial/delivery implication to BHEL.
- Any item/work either supply of equipment or erection material which have not been specifically mentioned but are necessary to complete the works for trouble free and efficient operation of the plant shall be deemed to be included within the scope of this specification. The bidder without any extra charge shall provide the same.
- Buried piping shall be protected as under (as per IS-10221).
  - Surface cleaning by wire brush, power tool cleaning etc.
  - Apply one coat of coaltar/primer/enamel.
  - Apply one layer of tape comprising of coaltar. Application of tape shall conform to AWWA C-203/IS 10221 (Appendix-B) with Minimum thickness of tape as 4MM +10%
- All drawings/documents shall be approved by BHEL/Customer during detailed engineering stage. Successful Bidder shall comply with the comment of the customer/BHEL without price & delivery implication.
- Successful bidder shall furnish detailed erection manual for each of the equipment as well as complete system supplied under this contract at least 3 months before the scheduled erection of the concerned equipment / component or along with supply of concerned equipment / component whichever is earlier.
- Final Electrical Load list will be submitted by the successful bidder as per agreed drawing/ doc submission schedule. Thereafter any change in the electrical load list shall be entertained only subject to its feasibility, and BHEL reserves the right to debit the vendor cost of any changes necessitated in the switch gear /MCC on account of changed loads.
- Wherever CIVIL works is excluded from the bidder's scope, successful bidder shall furnish civil assignment / scope drawings. The corresponding CIVIL drawing prepared by BHEL / CIVIL agency, based on civil assignment drawing of bidder will be furnished to the successful bidder for concurrence. In case any modification is required in the civil work already carried out based on final civil inputs given by bidder, BHEL reserves the right to debit cost of such rework to bidder.
- In case vendor submits revised drawing after approval of the corresponding drawing, any delay in

approval of revised drawing shall be to vendor's account and shall not be used as a reason for extension in contract completion.

- Bidders shall make Site visit in order to familiarize themselves with existing condition of site before submitting the bid in order to make their offer complete. During detail engineering also, the successful bidder shall be responsible for the correctness of details w.r.t. existing facility at site. Customer approval on any drawing having details of existing facility shall not be cited by the successful bidder a valid reason for any shortcoming in the work by them. BHEL shall also not entertain any cost implication for any lack of input data with regard to site during detail engineering.

10.4 PAINTING

Painting shall be Annexure V of technical specification. Internal painting of the equipments shall be suitable for withstanding effect of effluent. Outer painting shall be as per technical specifications. Supporting documents shall be furnished in support of suitability of the lining offered for the duty conditions by bidder during detailed engineering.

10.5 PLANT OPERATION AND CONTROL

Effluent treatment plant shall be controlled from PLC.

The control philosophy of various systems is described below. However, for all the systems, following basic process related interlocks, alarms /pre-warning signals shall be implemented in the control system as per system requirement.

a) Among the equipments, it shall be possible to select a specific pump or tank or sump for working/standby/ maintenance etc through control system.

b) Permissive & Interlocks:

(i) Starting & tripping of pumps with respect to liquid level in the respective sump/tanks or liquid pressure in the suction lines.

(ii) Starting & tripping of agitators with respect to liquid level in the respective sump/tanks.

(iii) Starting & tripping of pumps (which are provided with forced water lubrication) with respect to lubricating water flow (through low pressure/ low flow signal as the case may be).

(iv) Tripping of pumps when the discharge pressure is very high to avoid operation of the pump under shutoff head.

(v) Stopping/ tripping of equipments due to abnormal parameters related to safety of equipments like high vibration, very high bearing lubrication water (and /or oil) temperature to the drive/pumps, very high bearing temperature of the of pump/drive etc as applicable based on the recommendations of Equipment Supplier.

(vi) Automatic opening of the re-circulation valve to pre-set percentage, in case of failure of opening of pump(s) discharge valve to ensure minimum flow through the pump, as per the recommendation of manufacturer.

(vii) Automatic starting of standby pumps upon failure of starting of selected pump or tripping of running pump as the case may be.

(viii) Capacity of the metering pump shall be controllable from 10-100% continuously by adjusting the stroke length manually by a micro meter dial calibrated for 0–100% of pump capacity integral with the pump.

(ix) Various annunciations related to low level of the chemical tanks & sumps shall be provided.

c) Alarms /Signals

(i) Abnormal parameters such as low & high level in tanks/sumps, high pressure at pump discharge, low header pressure, low lubrication water flow to pumps (provided with forced water lubrication system) etc.

(ii) Failure of starting of equipments such as pumps, blowers etc. upon start command.

(iii) Tripping of equipments due to protection logic.

In addition, the control system shall facilitate the operator to know the status of various equipments (Whether equipment is running or stopped or tripped etc, whether the equipment is selected for operation/ standby duty /maintenance mode etc as the case may be).

MATERIAL HANDLING EQUIPMENTS

1.0 ELECTRIC HOIST AND MANUAL HOIST (CHAIN PULLEY BLOCK)

Required number of electric hoist / manual hoist of adequate capacity, to meet the erection and maintenance requirements are to be provided for the various areas where handling weight is more than 500 kg.

Manual hoists (hand operated) shall be designed to duty class 2 as per IS 3832 and electric wire rope hoist shall be designed as per IS: 3938 (latest).

The stipulations of all statutory codes like Indian Electricity Act, Indian Electricity Rules, Factory Acts, Local Municipality act etc. shall however prevail over the specification requirements, in case any conflict arises between this specification and the statutory codes.

Maintenance tools and tackles shall be as per data sheet attached.

DESIGN CRITERIA

For the hoists with more than 2.0 tonne lifting capacity and/ or more than 10.0 M lift i.e. either capacity or lift is more than 2T or 10 m, Electrical hoist shall be provided. Less than or equal to 2T and lift < 10m hoist blocks shall be of hand operated type for both travel and lift.

However, all monorails coming out of the building shall be provided with electric hoist block, irrespective of load and lift.

Capacity of electric and manual (Chain pulley block) hoists shall be decided keeping 25% margin over heaviest equipment to be handled.

For hand operated hoists, the hoists shall be suitable for operation from floor level. Hand chain shall be provided for long travel of trolley and the Hoisting mechanism. For electric hoist, operator shall be able to control the movement of the electrical hoist with the help of floor operated pendant

Note;

- Travel and Lift are layout dependent and shall be finalized during detail engineering without any commercial implication
- Additional electric/manual hoist required during detail engineering shall be provided as per design criteria given above without any commercial implication.

2.0 SCOPE OF SUPPLIES

Equipment and services to be furnished by the bidder for the ELECTRIC HOIST/ MANUAL HOIST with accessories as per the details given in the technical specification and data sheet A. Any equipment / accessories not specified in the specification but required to make the ELECTRIC HOIST/ MANUAL HOIST complete and efficient operation shall also be under the bidder's scope of work.

Compliance with this specification shall not relieve the bidder of the responsibility of furnishing material and workmanship to meet the specified working/duty conditions.

2.1 ELECTRIC HOIST

Electric hoist shall include but not be limited to the following: -

a. Hoisting and CT drive arrangement
b. All electrical equipment including cables (as per electrical scope matrix) and panels.
c. PVC insulated shrouded bus bar DSL
d. Earthing arrangement.
e. Fill of lubricant till commissioning / handling over to customer.
f. Painting of electric hoist and accessories.
g. Maintenance tools & Tackles
h. Erection & Commissioning spares
i. Isolating switch in enclosure at operating floor for disconnecting supply to DSL while maintaining the electric hoist.
j. Mandatory spares

2.2 MANUAL HOIST (CHAIN PULLEY BLOCK)

Manual hoist shall include but not be limited to the following:

a. Chain pulley blocks with/without traveling trolleys
b. Maintenance Tools and Tackles
c. Mandatory spares

2.3 Erection and Commissioning spares (ELECTRIC HOIST)

The Bidder shall also supply erection & commissioning spares along with his main equipment as per his experience, for replacement of damaged or unserviceable parts during the execution of the project at site, to avoid delay in the project schedule. This shall form part of the main equipment supply. The Purchaser shall retain the unutilized commissioning spares. The initial fill of lubricants, oil etc. shall also be supplied by the bidder.

2.4 Services to be provided by the bidder

Packing, forwarding and transportation to site, storage and handling at site.

2.5 Erection and Commissioning

2.6 Functional test (Overload testing, load testing at rated speed, travel and hoisting motion checks as per relevant Indian standards)

2.7 Obtaining clearance and acceptance certificate from the concerned competent authority after site test as applicable. Necessary fees/expenditure as required shall be borne by the supplier.

3.0 Inspection and Testing

Inspection and testing shall be carried out as per enclosed standard quality plan approved QAP and as per IS 3938 (latest revision). Prime inspection agency shall be NBPPL/End Customer. Equipment supplied shall be strictly in accordance with nomenclature & technical specification. Any additional testing requirement/ CHP(Customer Hold Point) at any stage of inspection deemed necessary by Customer/NBPPL during detailed engineering shall be carried out without any commercial or technical implication.

4.0 Works Excluded

Supply of ISMB monorail.

5.0 PAINTING SPECIFICATION

As per painting details specified elsewhere in specification.
ELECTRIC HOIST COLOR SHADE:
Colour shade: Structure: Golden Yellow, RAL 1004
Panel: Opaline green for exterior and semi glossy white for interior
MANUAL HOIST COLOR SHADE:
Trolley: Lemmon yellow (Shade 355 as per IS 5)
Hook: Light grey (Shade 631 as per IS 5)

6.0 PACKING

As per packing details specified elsewhere in specification.

7.0 DEMONSTRATION TEST

Hoist along with its drives, controls and other accessories shall be demonstrated for the rated capacity against the rated speed of motions and for the service conditions specified as specified in QAP and as per IS 3938 for electric hoist and IS 3832 for manual hoist.

The bidder shall have the full responsibility for the safe and efficient operation of the hoist with associated accessories as a single unit.

If the shop/site performance tests indicate the failure of any of the components to achieve the guaranteed performance, the deficiency shall be made good at bidder's cost.

Demonstration tests shall be carried out each time after the rectification /modification is carried out.

8.0 MAKE OF SUB - VENDOR ITEMS

Makes of bought out items will be as per list specified in the specification. No other make will be acceptable, until and unless specifically got it approved by the purchaser/ end client.

9.0 TESTING AT SITE

A) ELECTRIC HOIST:

As required for statutory clearance for operating at site i.e., overload test, load test and other tests as per IS 3938.

Test for Operation -After the supply has been connected, tests shall be carried out to prove the following:
a) The satisfactory operation of each controller, switch, contactor, relay and other control devices and in particular the correct operation of all limit switches under the most unfavorable conditions;
b) The correctness of all circuits and interlocks and sequence of operation; and
c) The satisfactory operation of all protective devices.

Overload Test -After test but before the hoist is put into service, it shall be tested with overload relays appropriately set, to lift and sustain a test load of 125 percent of the working load. During the overload test, the hoist shall sustain the load under full control. The specified speeds need not be attained but the hoist shall show itself capable of dealing with the overload without difficulty.

B) MANUAL HOIST:

As required for statutory clearance for operating at site with following minimum test i.e., overload and load test.

10.0 Maintenance Tools and Tackles

One (1) complete unused new set of special purpose tools, tackles and accessories along with detailed instructions and maintenance manual shall be supplied for each EH/CPB. Tools shall be of suitable sizes for maintenance of electric hoist of each type and capacity. Each tool shall be stamped so as to be identified easy for its use. The tools shall be supplied in steel toolbox. The items supplied shall be of the best quality, specially protected against rusting. The following shall be provided as minimum requirement:

S-No.	Description	Qty.
1	Complete set of ring spanners (Indicate the sizes offered)	1 Set
2	Complete set of screwdrivers (Indicate the sizes)	1 Set
3.	Adjustable Spanner	1 No.
4.	Insulated plier	1 No.

5.	Grease gun	1 No.
6.	Oil gun	1 No.
7.	Line tester	1 No.

Note: - Bidder shall ensure that the tools & tackles mentioned in above list are sufficient to handle all sizes/capacities of hoists & in case any other /additional tool is required for handling/maintenance any size/capacity of hoist the same shall be included in this list.