FIRST ANGLE PROJECTION

ALL DIMENSIONS ARE IN MM

DRAWING NO.

CUSTOMER'S DRAWING NO.

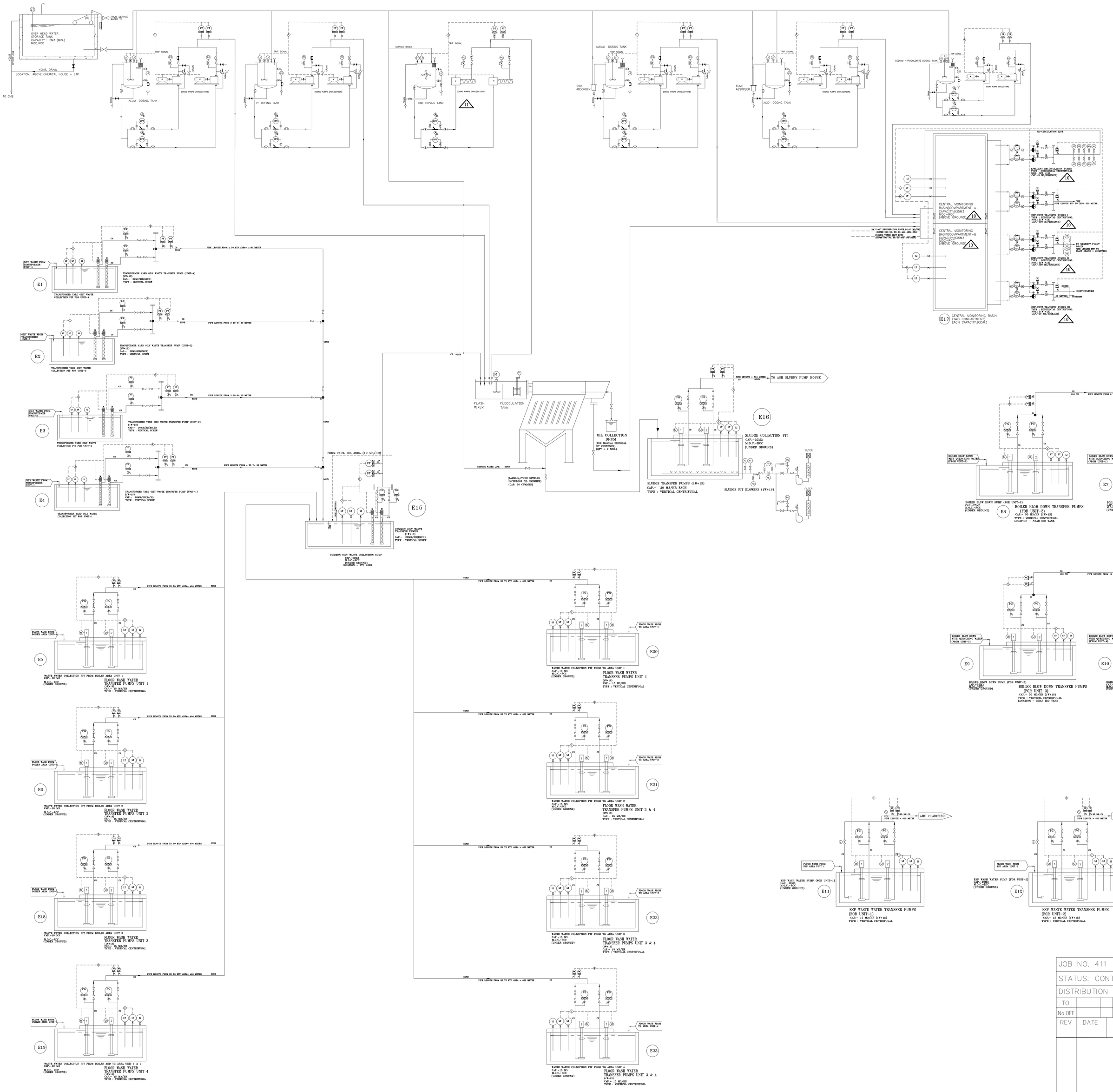

NOTES:

1. DRAINS OF CHEMICAL DOSING SYSTEM SHALL BE ROUTED TO CENTRAL MONITORING BASIN.
2. DEPTH OF SUMP MAY VARY FROM 2.0M TO 4.5M FOR SUMPS OUTSIDE ETP AREA.
3. ALL ITEMS, INSTRUMENTS, PIPING, VALVES, FITTINGS, EQUIPMENTS ETC. SHOWN IN THIS P & ID ARE IN BIDDER'S SCOPE.
4. FLUSHING SYSTEM IS NOT SHOWN IN THE P & ID. HOWEVER THE SAME IS IN THE SCOPE OF BIDDER FOR CHEMICALS AND SLUDGE LINES ETC. AS SPECIFIED IN TENDER SPECIFICATION.
5. MOC OF ANY ITEM NOT MENTIONED SHALL BE SUITABLY CONSIDER BY BIDDER AS PROCESS AND SYSTEM REQUIREMENTS.
6. PIPING, VALVE, INSTRUMENTATION, FITTING ETC SHOWN IN THIS P & ID ARE BARE MINIMUM REQUIREMENT. HOWEVER BIDDER TO CONSIDER ADDITION OF ITEM / EQUIPMENT BASED UPON SYSTEM AND PROCESS REQUIREMENTS TO MAKE SYSTEM EFFICIENT AND TROUBLE FREE.
7. INSTRUMENTATION FURNISHED IN THE P & ID IS A MINIMUM REQUIREMENT. HOWEVER, ANY INSTRUMENT REQUIRED FOR COMPLETENESS OF THE SYSTEM SHALL BE PROVIDED BY BIDDER WITHOUT ANY COST IMPLICATION. FOR REDUNDANCY CRITERIA, VENDOR TO FOLLOW THE CLAUSE PERTAINING TO REDUNDANCY CRITERIA MENTIONED IN THE SPECIFIC TECHNICAL REQUIREMENT.
8. PIPE DISTANCES SHOWN IN THIS DRAWING ARE FROM ONE AREA TO ANOTHER AREA ONLY. THESE PIPES SHALL BE IN BIDDER'S SCOPE. BIDDER TO CONSIDER PIPING LENGTH FOR INTERCONNECTION REQUIRED IN RESPECTIVE AREA IN THEIR SCOPE AS ADDITIONAL.

MANUAL VALVE LEGEND-

- NON RETURN VALVE
- GATE VALVE
- 3 WAY GAUGE COCK
- BALL VALVE
- RELIEF VALVE
- DIAPHRAGM VALVE
- NON RETURN VALVE
- MOTORIZED BUTTERFLY VALVE
- BUTTERFLY VALVE
- PLUG VALVE

INSTRUMENT LEGEND-

- FIELD INSTRUMENT
- PRESSURE GAUGE
- FLOW TRANSMITTER
- LEVEL TRANSMITTER
- LEVEL GAUGE
- ALARM
- LEVEL INDICATOR
- DIFFERENTIAL PRESSURE SWITCH
- DIAPHRAGM SEAL
- FLOW INDICATOR
- PRESSURE TRANSMITTER
- LEVEL INDICATOR (FLOAT & BOARD TYPE)
- INTERLOCK
- PH INDICATING TRANSMITTER
- TEMPERATURE INDICATOR
- TURBIDITY METER
- OIL ANALYSER
- FREE RESIDUAL CHLORINE ANALYSER

EQUIPMENT-

- HORIZONTAL CENTRIFUGAL PUMP
- MOTOR OPERATED
- FLOCCULATOR
- VERTICAL SCREW PUMP
- VERTICAL PUMP
- GT-MANUAL GATE
- SIMPLEX STRAINER
- 'Y' TYPE STRAINER
- MOTOR OPERATED AGITATOR WITH REDUCTION GEAR
- POSITIVE DISPLACEMENT PUMP
- VENTURY MIXER
- HORIZONTAL SCREW PUMP
- MOTORIZED HORIZONTAL AGITATOR

COPY RIGHT AND CONFIDENTIAL
The information on this document is the property of BHARAT HEAVY ELECTRICALS LIMITED
it must not be used directly or indirectly in any way determental to the interest of the company.

JOB NO. 411					
STATUS: CONTRACT					
DISTRIBUTION					
TO					
No.OFF					
REV	DATE	ALTD	CHD	APPD	

OWNER: TELANGANA STATE POWER GENERATION CORPORATION LIMITED.

PROJECT: 4X270 MW BHADRADRI TPS.

BHARAT HEAVY ELECTRICALS LTD
POWER GROUP
PROJECTS ENGINEERING MANAGEMENT
NOIDA

DEPT CODE		NAME	SIGN	DATE
MAX	DRN	DK		27.04.2018
	DESN	VG		27.04.2018
	CHD	JP /AKS		27.04.2018
	APPD	PK		27.04.2018

TITLE: P & I DIAGRAM FOR EFFLUENT TREATMENT PLANT

DEPT. / SIGN / DATE / SCALE

DRAWING NO. PE-DG-411-164A-A001

SHEET 1 OF 1 REV 11

SIZE-A1