FIRST ANGLE PROJECTION (ALL DIMENSIONS ARE IN mm)

DRAWING NUMBER

The information on this document is the property of BHARAT HEAVY ELECTRICALS LIMITED. It must not be used directly or indirectly in anyway detrimental to the interest of the company.

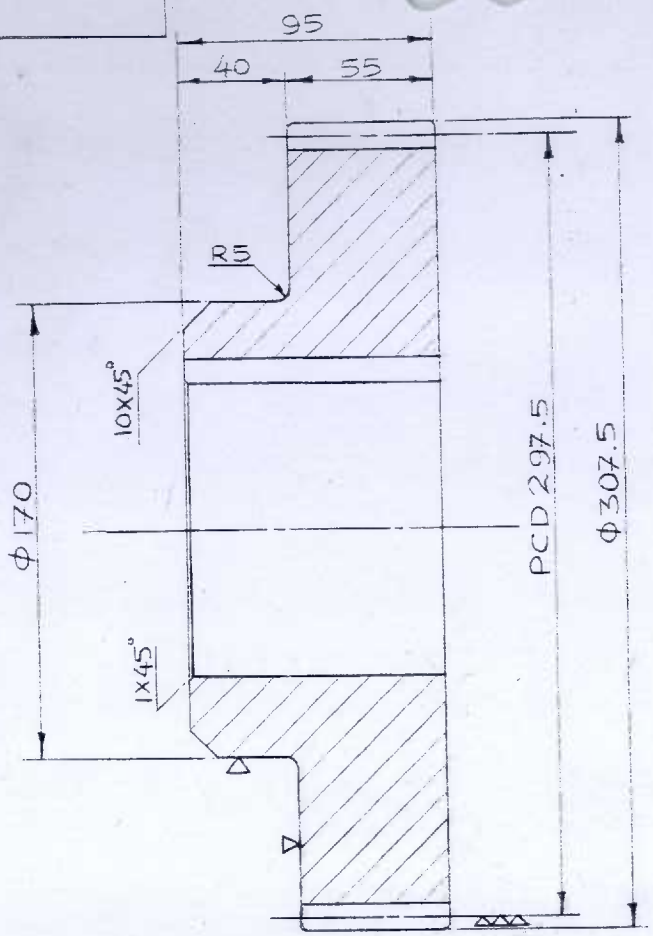

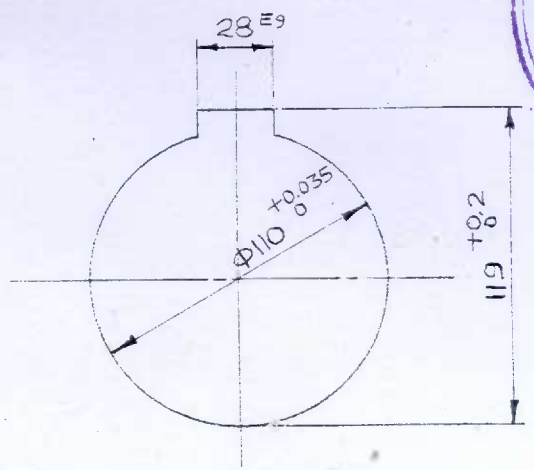

DESIGN BUREAU C.F.F.P.
ISSUED ON
15 JUL 2017
B.H.E.L., HARDWAR

MATERIAL: EN-24

NOTE:- (1) DRG. NUMBER TO BE PUNCHED ON THE JOB.
(2) TO BE SUPPLIED IN HARDENED, TEMPERED & CHAMFERRED CONDITION
(3) ALL SHARP CORNERS TO BE ROUNDED.

MODULE	5
NO. OF TEETH	60
PRESSURE ANGLE	20° (INVOLUTE)
P.C.D.	297.5
TOOTH HARDENING	HRC 45-50
CORRECTION FACTOR	-0.25
TOOTH DEPTH	11.5

PART NO. 3502

REV	DATE	ALTERED
		CHECKED

TYPE OF PRODUCT OR NAME OF CUSTOMER / PROJECT: MACHINE SHOP

BHARAT HEAVY ELECTRICALS LTD.
UNIT: C.F.F.P., HARDWAR.

DEPT.	CODE	SCALE	WEIGHT (KG)	REF. TO ASSY. DRG.	ITEM NO.
		1:2			

SPUR GEAR
FOR HEAD STOCK, FR-100 CENTRE LATHE

	NAME	SIGN.	DATE
DRAWN			7.10.93
CHECKED			
APPROVED			

Dimensions to be Controlled Within Limits as Shown Machining Tolerence ± 25 mm Unless Otherwise Shown, Non Machining Tolerence ±

CARD CODE

DRAWING NO. 04,01,024 REV. 15 16 17

SHEET NO. 1 NO. OF SHEETS. 1

FR 100~35 Ref. Drg. No.

Sign. & Date

FF 825/010244 Inventory No.

T ANGLE PROJECTION (ALL DIMENSIONS ARE IN MM.)

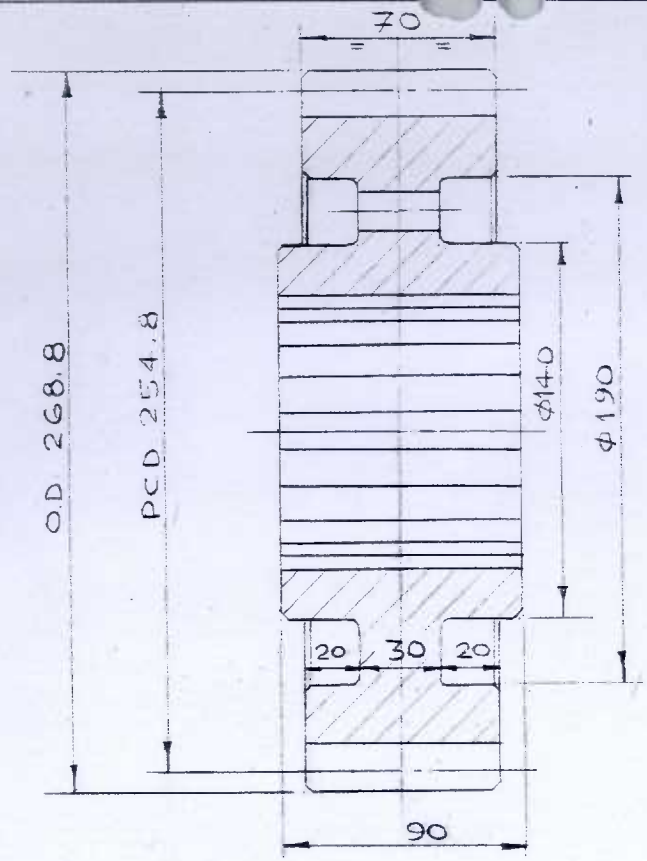

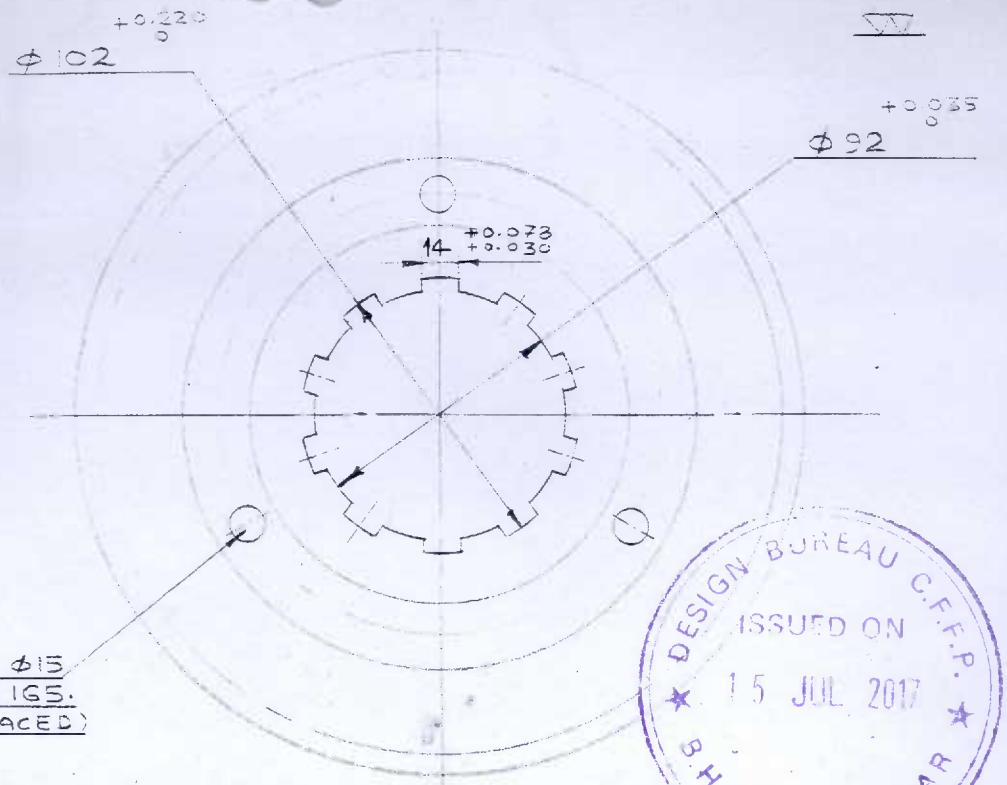

1	NO. OF TEETH	36
2	MODULE	7
3	HELIX ANGLE	8.5°
4	PRESSURE ANGLE	20°
5	DIRECTION	L.H.
6	TOOTH HARDNESS	HRC 45-50

10 STRAIGHT SIDED SPLINE (INTERNAL)

1. GEAR TEETH SHOULD BE GRIND FINISH AFTER HARDENING.
2. DRG NO TO BE PUNCHED ON THE JOB.

DESIGN BUREAU C.F.F.P. ISSUED ON 15 JUL 2017 B.H.E.L. HARDWAR

ALL SHARP CORNERS TO BE ROUNDED OFF.

MATERIAL- EN 24

REV.	DATE	ALTERED CHECKED	REV.	DATE	ALTERED CHECKED	REV.	DATE	ALTERED CHECKED

BHARAT HEAVY ELECTRICALS LIMITED.
UNIT:CENTRAL FOUNDRY FORGE PLANT.
HARDWAR

DEPTT.	SCALE	WEIGHT(KGS.)	REF. to ASSY. DRG.	ITEM NO.
DESIGN BUREAU	1:2	21.0		

TITLE HELICAL GEAR (SECOND) FOR MAIN GEAR BOX VT3 2.5

	NAME	SIGN.	DATE
DRAWN	KISHORI LAL		
CHECKED	PBG		
APPROVED	PBG		

Dimensions to be controlled Within Limits as Shown Machining Tolerence ± 0.25 mm Unless Otherwise Shown. Non Machining Tolerence ±

DRAWING NO. 04,06,030 REV. 0

SHEET NO. 1 NO. OF SHEETS 1

SIZE-A.3

The information on this document is the property of BHARAT HEAVY ELECTRICALS LIMITED. It must not be used directly or indirectly in any way detrimental to the interest of the company.

Ref. Drg. No.

Sign & Date

Inventory No. FF82 S1010381

35

FIRST ANGLE PROJECTION (ALL DIMENSIONS ARE IN ...M.)

The information on this document is the property of BHARAT HEAVY ELECTRICALS LIMITED. It must not be used directly or indirectly in any way deterimental to the interest of the company.

Ref. Drg. No.

Sign & Date

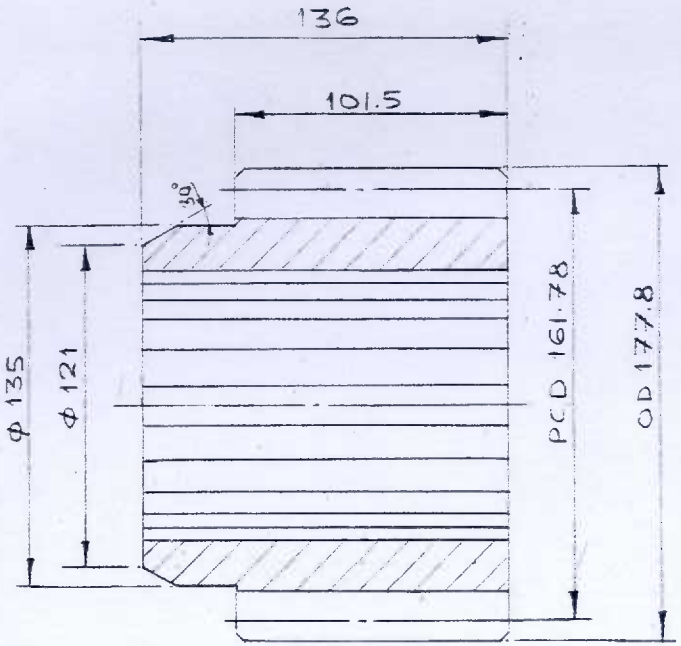

SEC. AA

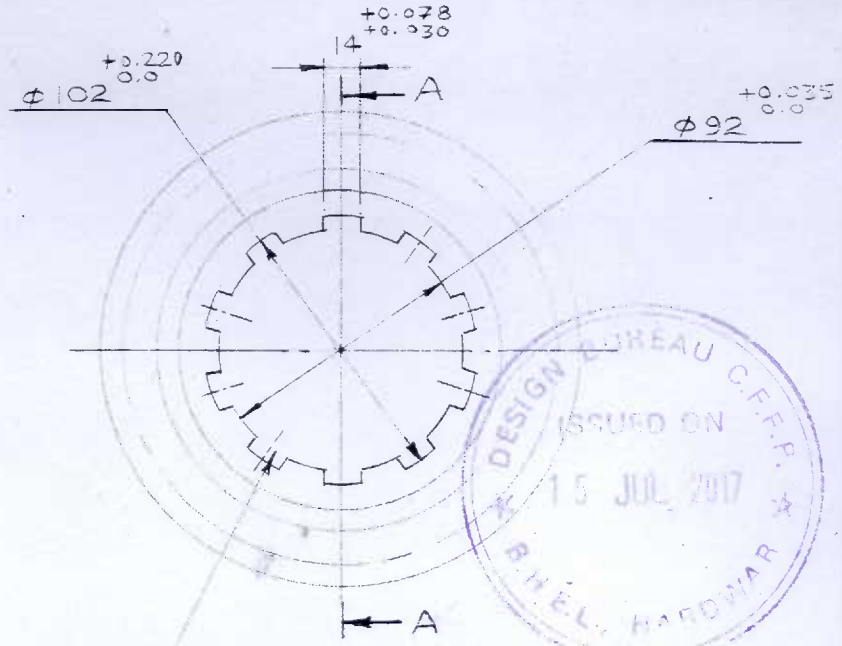

10 STRAIGHT SIDED SPLINE (INTERNAL)

1	NO. OF TEETH	20
2	MODULE	8
3	HELIX ANGLE	8.5°
4	PRESSURE ANGLE	20°
5	DIRECTION	R.H.
6	TOOTH HARDNESS	HRC 55-60

NOTES:
1. GEAR TEETH SHOULD BE GRIND FINISH AFTER HARDENING.
2. DRG NO. TO BE PUNCHED ON THE ITEM.

ALL SHARP CORNERS TO BE ROUNDED OFF.

MATERIAL- EN36

REV.	DATE	ALTERED / CHECKED	REV.	DATE	ALTERED / CHECKED	REV. 1	DATE	ALTERED / CHECKED
						MATERIAL CHANGED FROM EN18 TO EN36		

Inventory No. 11-02-510103 70

BHARAT HEAVY ELECTRICALS LIMITED.
UNIT: CENTRAL FOUNDRY FORGE PLANT.
HARDWAR

DEPTT. DESIGN BUREAU | SCALE 1:2 | WEIGHT(KGS.) 12.350 | REF. to ASSY. DRG. | ITEM NO.

TITLE HELICAL PINION (THIRD) FOR MAIN GEAR BOX VTB 2.5

	NAME	SIGN.	DATE
DRAWN	KISHORI LAL		
CHECKED	P B G		
APPROVED	P B G		20.07.96

Dimensions to be controlled Within Limits as Shown Machining Tolerence ± 0.25 mm Unless Otherwise Shown. Non Machining Tolerence ±

DRAWING NO. 04.06.031 | REV. R1

SHEET NO. 1 | NO. OF SHEETS 1

DESIGN BUREAU C.F.F.P. ISSUED ON 15 JUL 2017 B.H.E.L. HARDWAR

39

ST ANGLE PROJECTION (ALL DIMENSIONS AR M

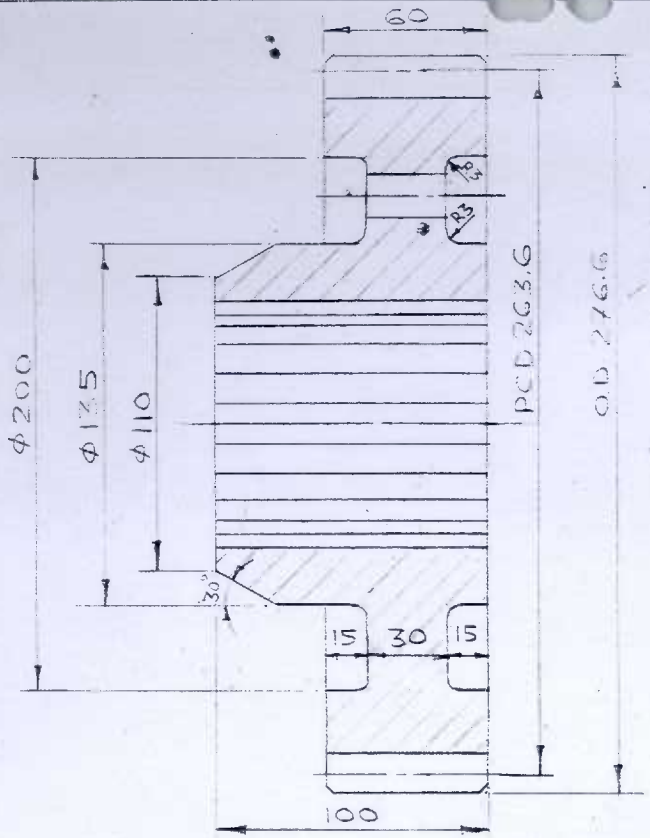

SEC - AA

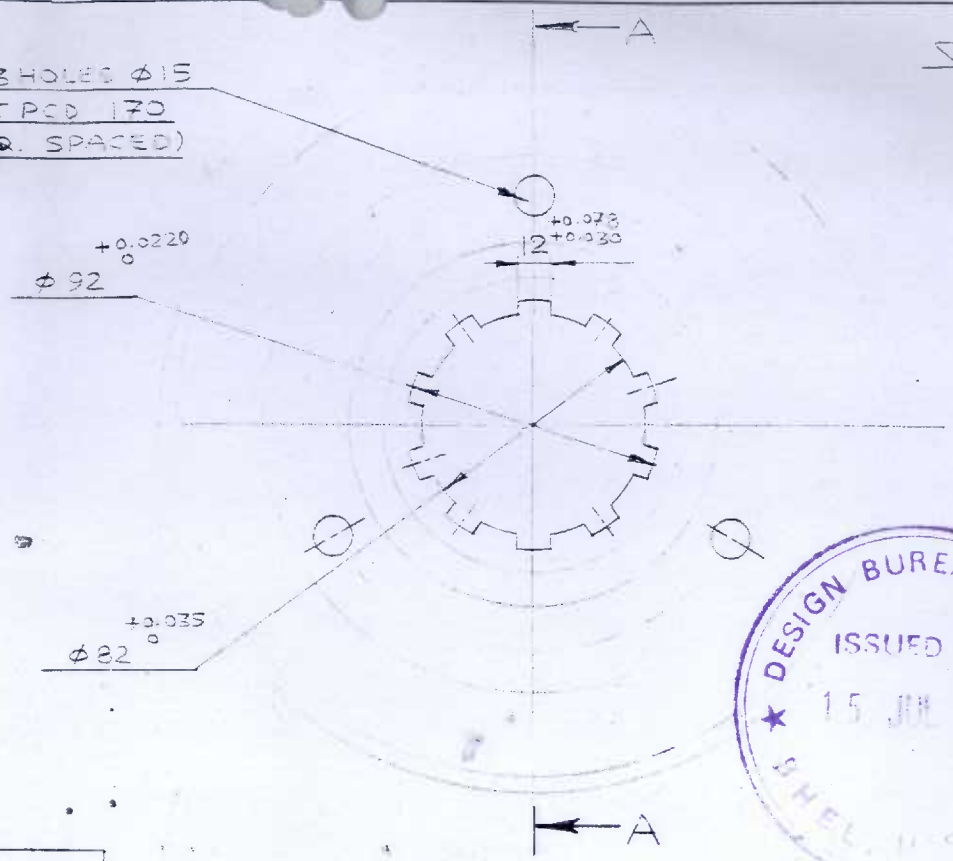

10 STRAIGHT SIDED SPLINES (INTERNAL)

1	NO. OF TEETH	40
2	MODULE	6.5
3	HELIX ANGLE	9.5°
4	PRESSURE ANGLE	20°
5	DIRECTION	R.H.
6	TOOTH HARDNESS	HRC 45-50

1. GEAR TEETH SHOULD BE GRIND FINISH AFTER HARDENING
2. DRG NO. TO BE PUNCHED ON THE JOB.

DESIGN BUREAU C.F.F.P. ISSUED ON 15 JUL 2017 BHEL HARDWAR

The information on this document is the property of BHARAT HEAVY ELECTRICALS LIMITED. It must not be used directly or indirectly in any way detrimental to the interest of the company.

Ref. Drg. No.

Sign & Date

Inventory No.

ALL SHARP CORNERS TO BE ROUNDED OFF.

MATERIAL- EN 24

REV.	DATE	ALTERED CHECKED	REV.	DATE	ALTERED CHECKED	REV.	DATE	ALTERED CHECKED

BHARAT HEAVY ELECTRICALS LIMITED.
UNIT: CENTRAL FOUNDRY FORGE PLANT.
HARDWAR

DEPTT. DESIGN BUREAU	SCALE 1:2	WEIGHT(KGS.) 21.5	REF. to ASSY. DRG.	ITEM NO.

TITLE HELICAL GEAR (SECOND) FOR MAIN GEAR BOX VTB 25

	NAME	SIGN.	DATE
DRAWN	KISHORI LAL		
CHECKED	P B S		
APPROVED	P B S		

Dimensions to be controlled Within Limits as Shown Machining Tolerence ± 0.25 mm Unless Otherwise Shown. Non Machining Tolerence ±

DRAWING NO. 04.06.032 REV. 0

SHEET NO. 1 NO. OF SHEETS 1

SIZE-A3

33

ANGLE PROJECTION (ALL DIMENSIONS ARE I

The information on this document is the property of BHARAT HEAVY ELECTRICALS LIMITED.
It must not be used directly or indirectly in any way detrimental to the interest of the company.

Ref. Drg. No.

Sign & Date

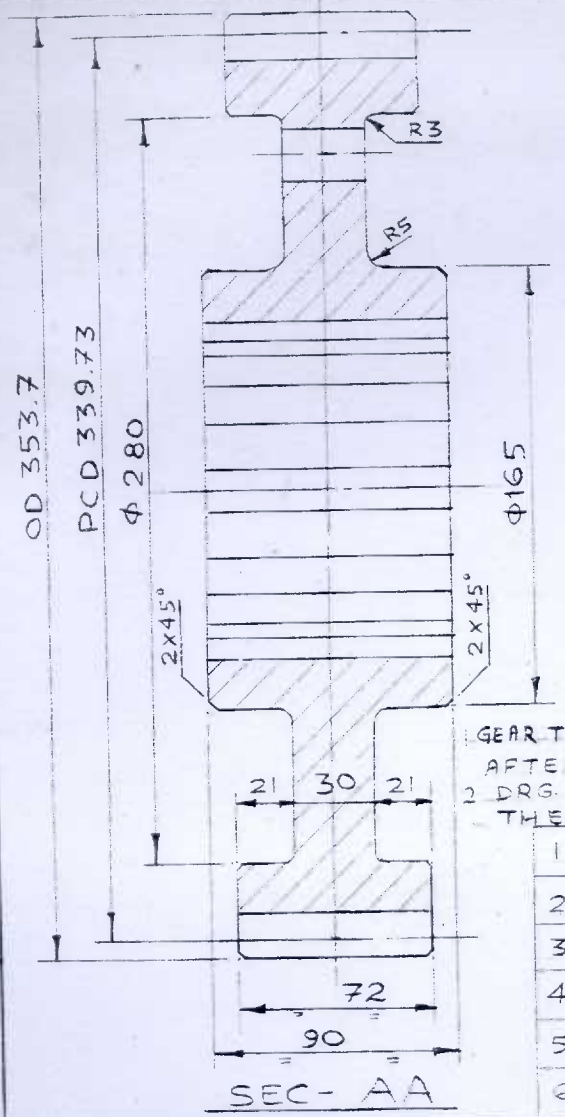

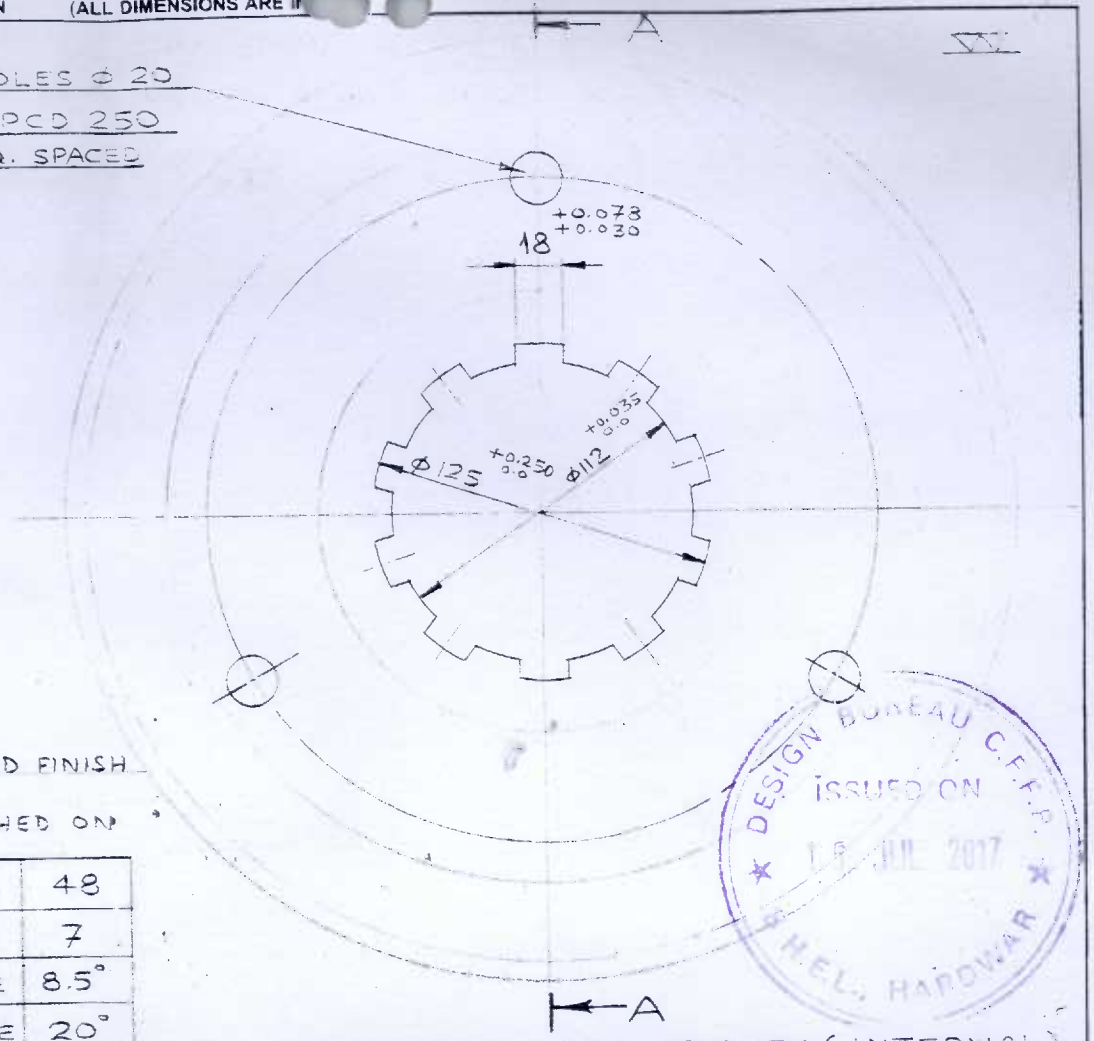

GEAR TEETH SHOULD BE GRIND FINISH AFTER HARDENING.
2 DRG. NO. TO BE PUNCHED ON THE JOB.

1.	NO. OF TEETH	48
2.	MODULE	7
3	HELIX ANGLE	8.5°
4	PRESSURE ANGLE	20°
5	DIRECTION	R.H.
6	TOOTH HARDNESS	HRC 45-50

10 STRAIGHT SIDED SPLINES (INTERNAL)

DESIGN BUREAU C.F.F.P. ISSUED ON 18 JUL 2017 BHEL, HARDWAR

ALL SHARP CORNERS TO BE ROUNDED OFF.

MATERIAL- EN 24

REV.	DATE	ALTERED CHECKED	REV.	DATE	ALTERED CHECKED	REV.	DATE	ALTERED CHECKED

Inventory No. FC 9515 1010 411

BHARAT HEAVY ELECTRICALS LIMITED.
UNIT:CENTRAL FOUNDRY FORGE PLANT.
HARDWAR

DEPTT. DESIGN BUREAU	SCALE 1:2	WEIGHT(KGS.) 33.2	REF. to ASSY. DRG.	ITEM NO.

TITLE HELICAL GEAR (THIRD) FOR MAIN GEAR BOX VTB 2.5

	NAME	SIGN.	DATE
DRAWN	KISHORILAL		
CHECKED	PBG		
APPROVED	PBG		20.x.98

Dimensions to be controlled Within Limits as Shown Machining Tolerence± 0.25 mm Unless Otherwise Shown. Non Machining Tolerence ±

DRAWING NO. 04,06,035 REV. 0

SHEET NO. 1 NO. OF SHEETS 1

SIZE-A.3

32

FIRST ANGLE PROJECTION (ALL DIMENSIONS ARE IN mm)

DRAWING NUMBER

W (WW)

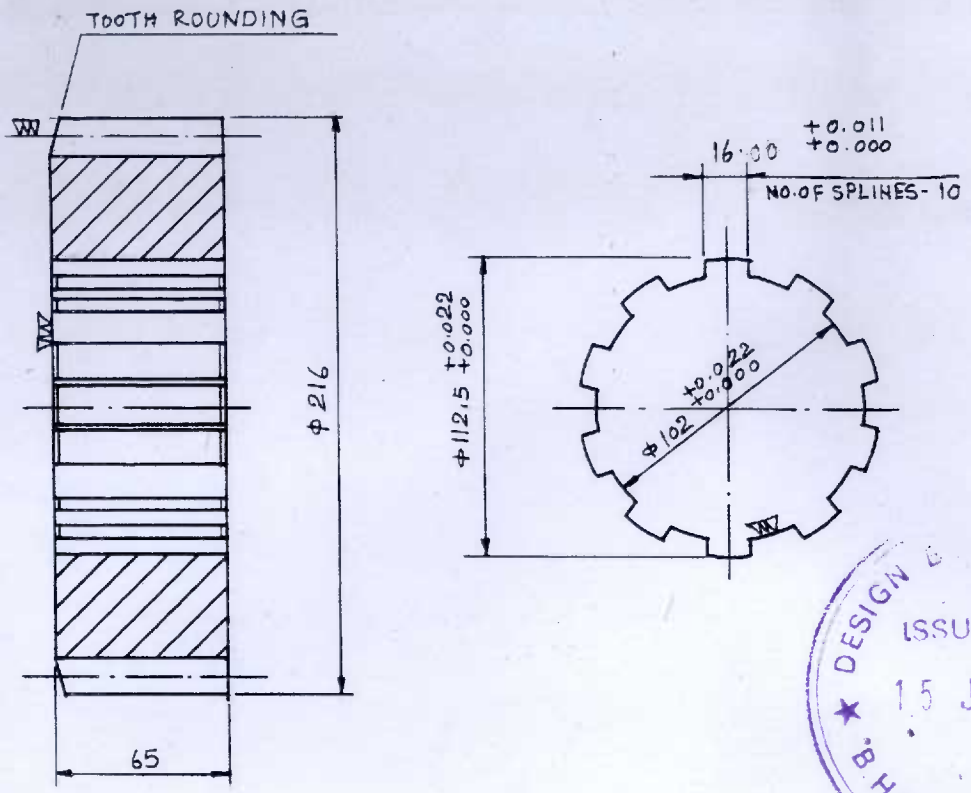

NO.	DESCRIPTION	DATA
1.	NO. OF TEETH	34
2.	MODULE	6
3.	PRESSURE ANGLE	20°
4	TOOTH DEPTH	13.5
5.	TOOTH HARDENING	HRC-45-50
6.	MATERIAL	EN-24

DESIGN BUREAU C.F.F.P. ISSUED ON 15 JUL 2017 B.H.E.L., HARDWAR

SPLINE MATCH WITH DRG NO. 04,14,055.

1. GEAR TEETH SHOULD BE GRIND FINISH AFTER HARDENING.
2. DRG NO TO BE PUNCHED ON THE JOB.

REV	DATE	ALTERED
R1	10.3.12	CHECKED

MATERIAL CHANGED

TYPE OF PRODUCT
OR
CUSTOMER'S NAME

DG-38

BHARAT HEAVY ELECTRICALS LTD.
C. F. F. P., RANIPUR - HARDWAR.

DEPT.	CODE	1:2	SCALE	WEIGHT (KG)	REF. TO ASSY. DRG.	ITEM NO.

SPUR GEAR SECOND SHAFT
FOR HEAD STOCK - CENTRE LATHE-SR-2000

	NAME	SIGN.	DATE
DRAWN			
CHECKED			
APPROVED			

Dimensions to be Controlled Within Limits as Shown
Machining Tolerence ± ·25 mm Unless Otherwise
Shown. Non Machining Tolerence ±

CARD CODE

DRAWING NO. 04 - 14 - 010

REV R1

SHEET NO. NO. OF SHEETS.

The information on this document is the property of BHARAT HEAVY ELECTRICALS LIMITED.
It must not be used directly or indirectly in anyway detrimental to the interest of the company.

220/2519-32 Ref. Drg. No.

Sign. & Date

Inventory No.

FF 825 10-4-02-4 KB

FIRST ANGLE PROJECTION (ALL DIMENSIONS ARE IN MM.)

NOTE
1. GEAR TEETH SHOULD BE GRIND FINISH AFTER HARDENING
2. DRG NO. TO BE PUNCHED ON THE JOB.

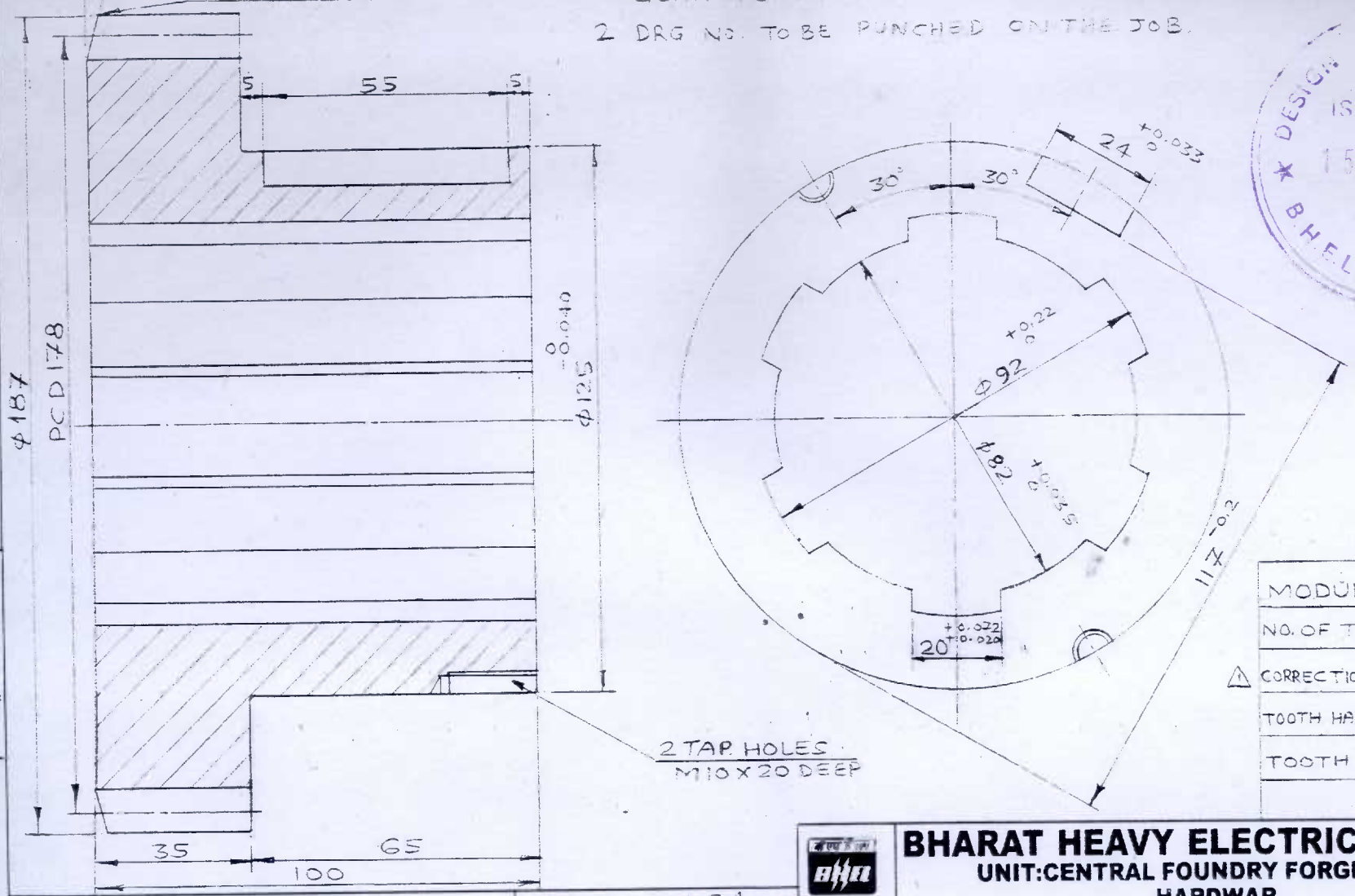

DESIGN BUREAU C.F.F.P. ISSUED ON 15 JUL 2017 B.H.E.L. HARDWAR

MODULE	4.5
NO. OF TEETH	40
CORRECTION FACTOR	-1
TOOTH HARDENING	HRC 45-50
TOOTH DEPTH	10.125

The information on this document is the property of BHARAT HEAVY ELECTRICALS LIMITED. It must not be used directly or indirectly in any way deterimental to the interest of the company.

Ref. Drg. No. 15304. FUJI SEIKI CO. LTD FRB110-153

Sign & Date

ALL SHARP CORNERS TO BE ROUNDED OFF.

MATERIAL- EN 24

BHARAT HEAVY ELECTRICALS LIMITED.
UNIT:CENTRAL FOUNDRY FORGE PLANT.
HARDWAR

REV.	DATE	ALTERED	CHECKED	REV.	DATE	ALTERED	CHECKED	REV.	DATE	ALTERED	CHECKED
								R1	27.2.18	CORRECTION FACTOR CHANGED	

DEPTT. DESIGN BUREAU | SCALE 1:1 | WEIGHT(KGS.) 8.30 | REF. to ASSY. DRG. | ITEM NO.

TITLE SPUR GEAR NO.4 (THIRD SHAFT) FOR CUTTER HEAD CHB, FRB 110

	NAME	SIGN.	DATE
DRAWN	KISHORI LAL		2.2.18
CHECKED	P.B.G.		
APPROVED	P.B.G.		2.2.18

Dimensions to be controlled Within Limits as Shown Machining Tolerence± 0.25 mm Unless Otherwise Shown. Non Machining Tolerence ±

DRAWING NO. 04.21.24. REV R1

SHEET NO. 1 NO. OF SHEETS 1

Inventory No. FF 825/600227

SIZE-A.3

30

ANGLE PROJECTION (ALL DIMENSIONS ARE [illegible])

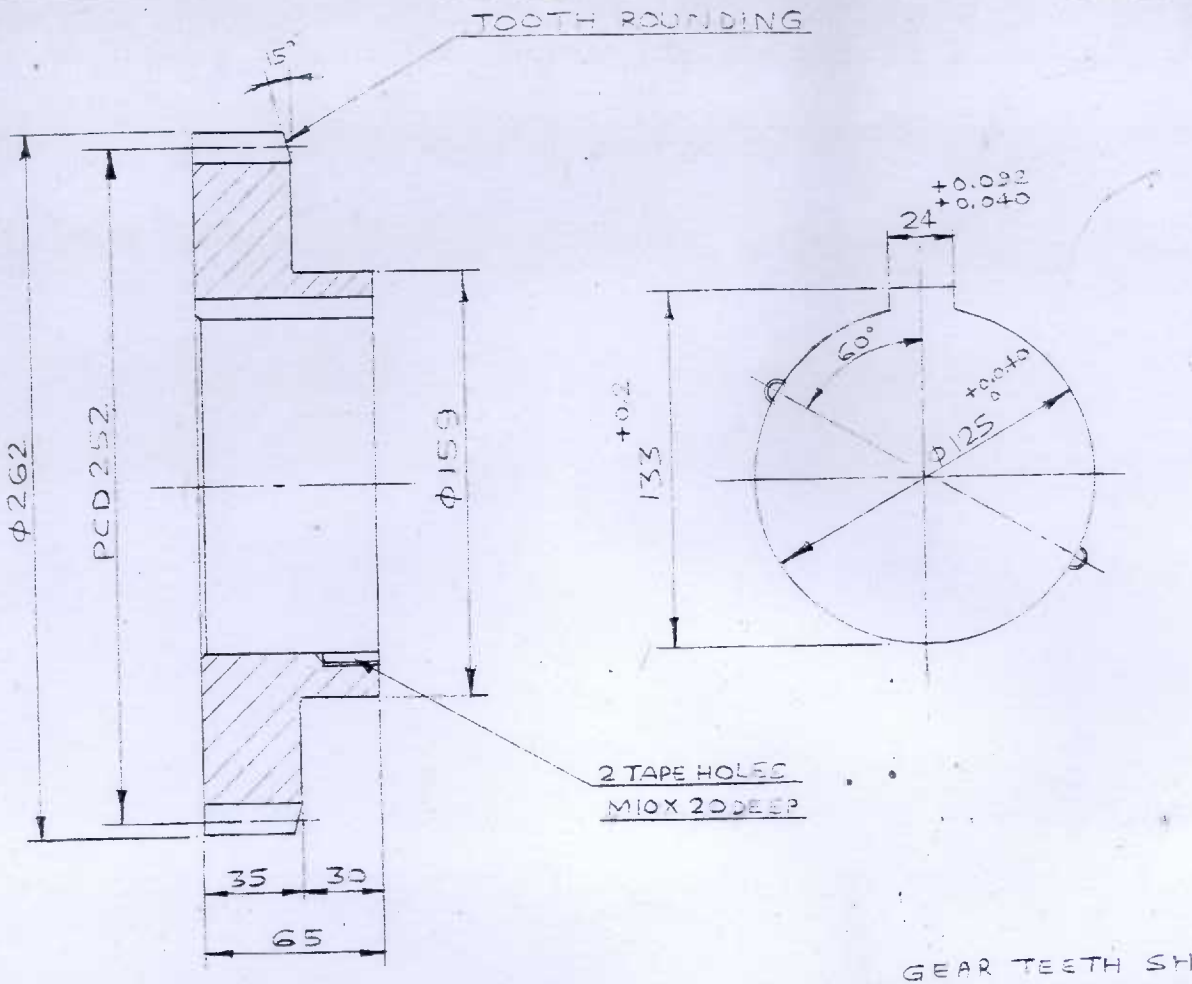

NO. OF TEETH	50.
MODULE	5
CORRECTION FACTOR	+1
TOOTH HARDENING	HRC 45-50
TOOTH DEPTH	11.25

DESIGN BUREAU C.F.F.P. ISSUED ON 15 JUL 2017 BHEL, HARDWAR

GEAR TEETH SHOULD BE GRIND FINISH AFTER HARDENING
DRG. NO. TO BE PUNCHED ON THE ITEM.

The information on this document is the property of BHARAT HEAVY ELECTRICALS LIMITED. It must not be used directly or indirectly in any way deterimental to the interest of the company

Ref. Drg. No. 15305 FUJI SEIKI Co. LTD ERB 110-153

Sign & Date

Inventory No. FF825/600235

ALL SHARP CORNERS TO BE ROUNDED OFF.

MATERIAL- EN 24

REV.	DATE	ALTERED / CHECKED	REV.	DATE	ALTERED / CHECKED	REV.	DATE	ALTERED / CHECKED
						R1	27.2.[illegible]	CORRECTION FACTOR CHANGED

BHARAT HEAVY ELECTRICALS LIMITED.
UNIT:CENTRAL FOUNDRY FORGE PLANT.
HARDWAR

DEPTT.	SCALE	WEIGHT(KGS.)	REF. to ASSY. DRG.	ITEM NO.
DESIGN BUREAU	1:2			

TITLE SPUR GEAR NO.5 (THIRD SHAFT) FOR CUTTER HEAD DHB, ERB 110

	NAME	SIGN.	DATE
DRAWN	KISHORI LAL		25.5.[illegible]
CHECKED			
APPROVED	[illegible]		[illegible]

Dimensions to be controlled Within Limits as Shown Machining Tolerence± 0.25 mm Unless Otherwise Shown. Non Machining Tolerence ±

DRAWING NO. 04, 21, 027 REV. 01

SHEET NO. 1 NO. OF SHEETS 1

SIZE-A.3

IRST ANGLE PROJECTION (ALL DIMENSIONS ARE IN ...

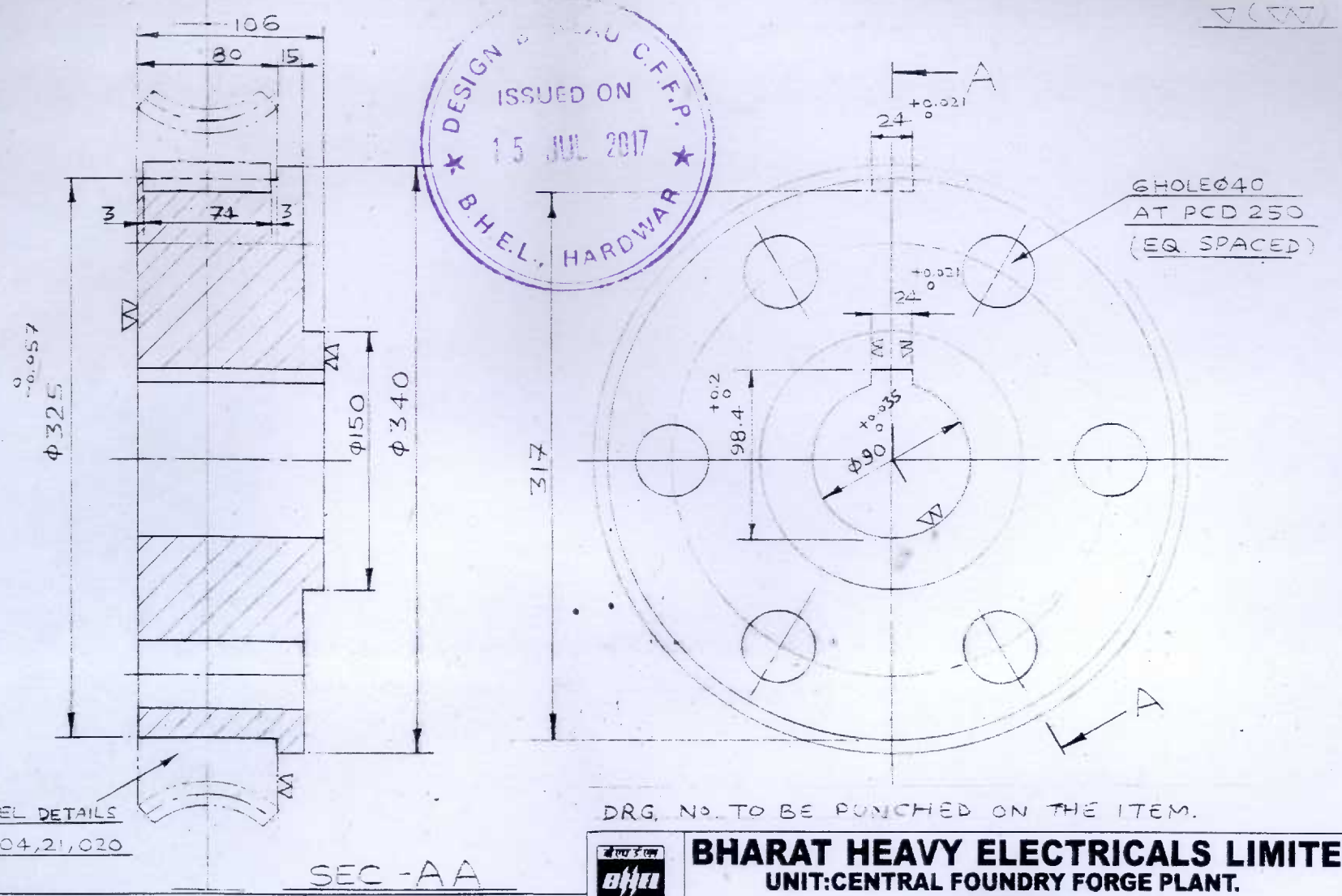

DESIGN BUREAU C.F.F.P.
ISSUED ON
15 JUL 2017
BHEL, HARDWAR

The information on this document is the property of BHARAT HEAVY ELECTRICALS LIMITED.
It must not be used directly or indirectly in any way deterimental to the interest of the company.

Ref. Drg. No. FUJI SEIKI CO. LTD. FRB No. 87

Sign & Date

Inventory No. FF8251110041

ALL SHARP CORNERS TO BE ROUNDED OFF.

MATERIAL- EN-24

REV.	DATE	ALTERED / CHECKED	REV.	DATE	ALTERED / CHECKED	REV.	DATE	ALTERED / CHECKED

BHARAT HEAVY ELECTRICALS LIMITED.
UNIT:CENTRAL FOUNDRY FORGE PLANT.
HARDWAR

DEPTT.	SCALE	WEIGHT(KGS.)	REF. to ASSY. DRG.	ITEM NO.
DESIGN BUREAU	1:2.5	46.3		

TITLE WORM WHEEL BUSH FOR CUTTER HEAD REST DHB. F33-110

	NAME	SIGN.	DATE
DRAWN	KISHORI LAL		
CHECKED	P.B.		
APPROVED	P.B.		

Dimensions to be controlled Within Limits as Shown Machining Tolerence± 0.25 mm Unless Otherwise Shown. Non Machining Tolerence ±

DRAWING NO. 04,21,026 REV. 0

SHEET NO. 1 NO. OF SHEETS 1

28

IRST ANGLE PROJECTION (ALL DIMENSIONS ARE

The Information on this document is the property of BHARAT HEAVY ELECTRICALS LIMITED
It must not be used directly or indirectly in anyway deterimental to the interest of the company.

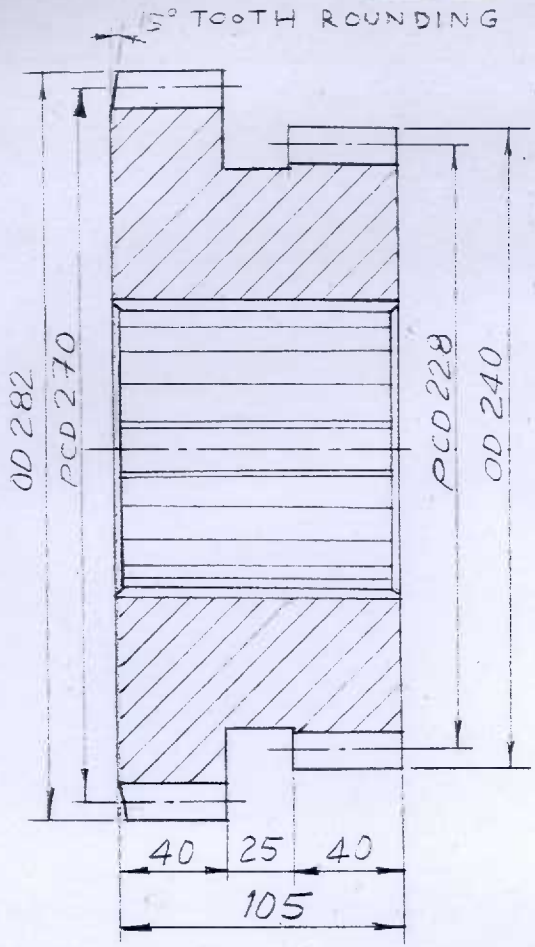

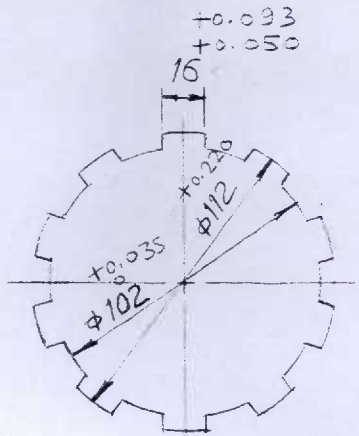

DESIGN ... C.F.F.P.
ISSUED ON
15 JUL 2017
B.H.E.L., HARDWAR

DESCRIPTION	FOR OD 282	FOR OD 240
NO. OF TEETH	45	38
MODULE	6	6
TOOTH DEPTH	13.5	13.5
PRESSURE ANGLE	20°	20°
HARDNESS	HRC 45-50	
MATERIAL	En 24	

1. GEAR TEETH SHOULD BE GRIND FINISH AFTER HARDENING.
2. DRG. NO TO BE PUNCHED ON THE ITEM.

Ref. Drg. No.

Sign & Date

Inventory No. FF82516002260

MATERIAL :

REV.	DATE	ALTERED / CHECKED	REV.	DATE	ALTERED / CHECKED	REV.	DATE	ALTERED / CHECKED

BHARAT HEAVY ELECTRICALS LTD.
UNIT : CENTRAL FOUNDRY FORGE PLANT
HARDWAR

DEPTT. DESIGN	SCALE 1:2	WEIGHT (KGS.)	REF. to ASSY. DRG.	ITEM NO.

TITLE : DOUBLE SPUR GEAR OF 4th SHAFT CUTTER HEAD DHB M/C SHOP

	NAME	SIGN.	DATE
DRAWN	I.Q.BAL		07.12
CHECKED	K. LAL		
APPROVED	N.SAGAR		

Dimensions to be Controlled Within Limits as Shown
Machining Tolarance±0. 25 mm Unless Otherwise
Shown. Non Machining Tolerence ±

DRAWING NO. 04.21.037 REV. 0

SHEET NO. 1 NO. OF SHEETS 1

S NGLE PROJECTION (ALL DIMENSIONS ARE)

DESIGN BUREAU C.F.F.P.
ISSUED ON
15 JUL 2017
B.H.E.L., HARDWAR

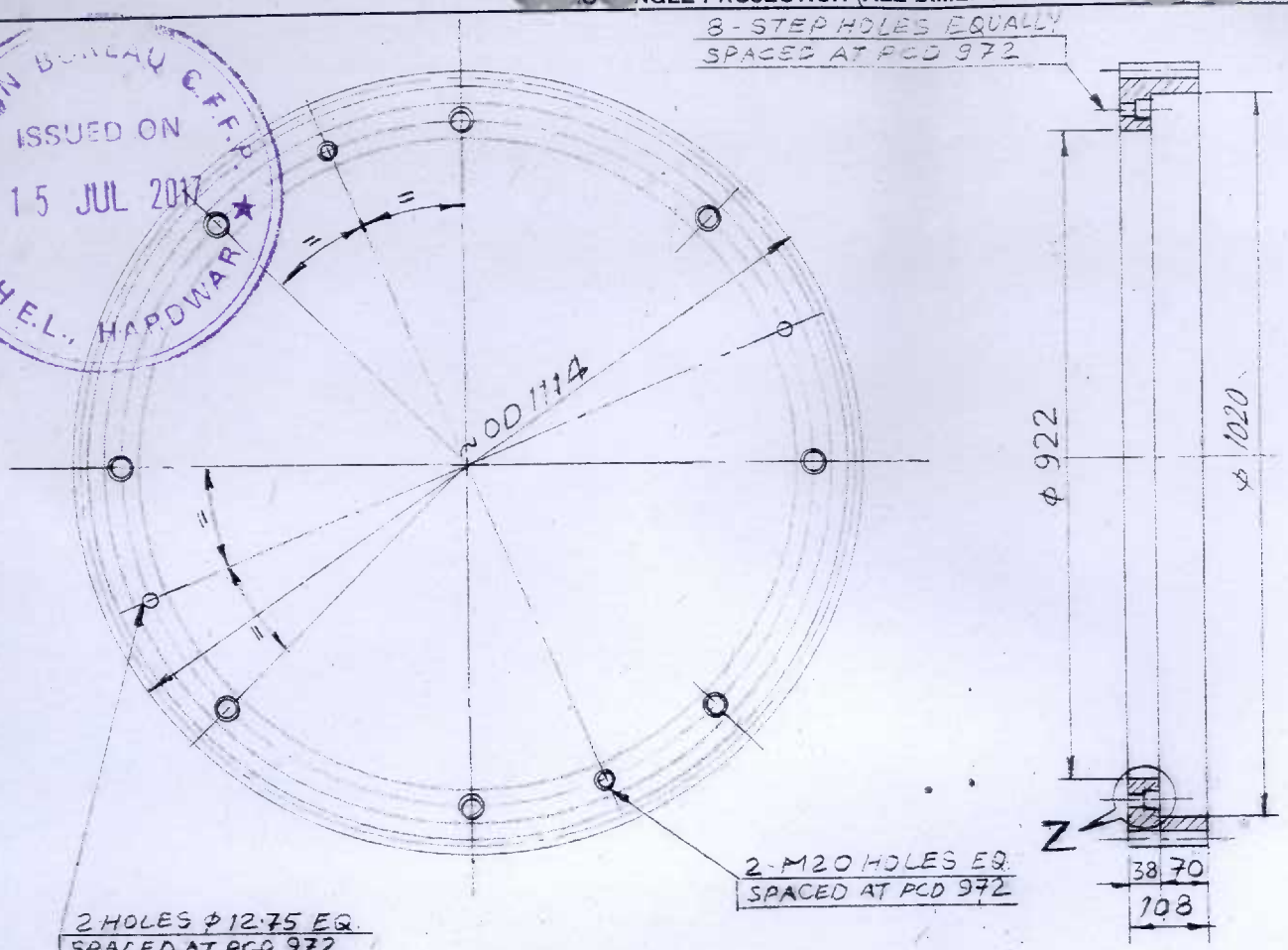

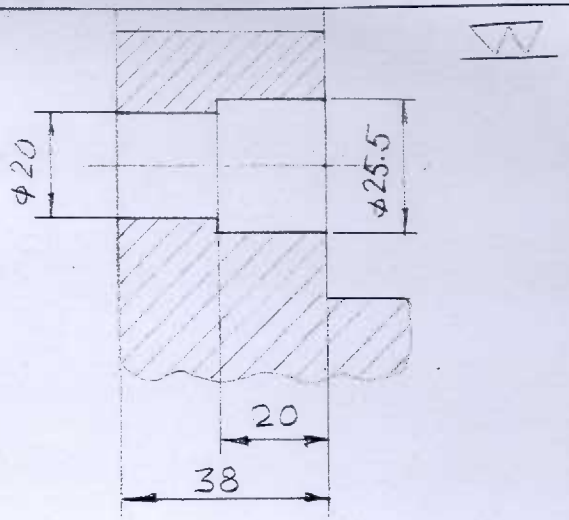

ENLARGED DETAIL-Z
(SCALE 1:1)

NO. OF TEETH	130
D.P	3
PRESSURE ANGLE	20°
CORRECTION FACTOR	-0.206
HARDNESS	HRC 45-50
MATERIAL	En 24

MATCHING DRG. NO. 04,28,027

NOTES
1. GEAR TEETH SHOULD BE GRIND AFTER HARDENING.
2. DRG. NO. TO BE PUNCHED ON THE ITEM.

MATERIAL :

REV.	DATE	ALTERED / CHECKED	REV.	DATE	ALTERED / CHECKED	REV.	DATE	ALTERED / CHECKED

BHARAT HEAVY ELECTRICALS LTD.
UNIT : CENTRAL FOUNDRY FORGE PLANT.
HARDWAR.

DEPTT. DESIGN | SCALE 1:1, 1:2 | WEIGHT(KG) | REF. to ASSY. DRG. | ITEM NO.

	NAME	SIGN.	DATE
DRAWN	[illegible]		15.01
CHECKED	K.L.AL		17.01
APPROVED	V. SAGAR		[illegible]

TITLE SPUR GEAR
FOR CHUCK DRIVE VTB 15 M/C SHOP

Dimensions to be Controlled Within Limits as Shown
Machining Tolarance ±0.25 mm Unless Otherwise
Shown. Non Machining Tolerence ±

DRAWING NO. 04,28,030 | REV. 0
SHEET NO. 1 | NO. OF SHEETS. 1

The Information on the document is the Property of BHARAT HEAVY ELECTRICALS LIMITED.
It must not be used directly or indirectly in anyway deterimental to the interest of the company.

Ref. Drg.No.

Sign & Date

Inventory No. FF 825/54012-7

The information on this document is the property of BHARAT HEAVY ELECTRICALS LIMITED
It must not be used directly or indirectly in anyway deterimental to the interest of the company.

Ref. Drg. No.

Sign & Date

Inventory No. FF 82516201 58

ALL OVER

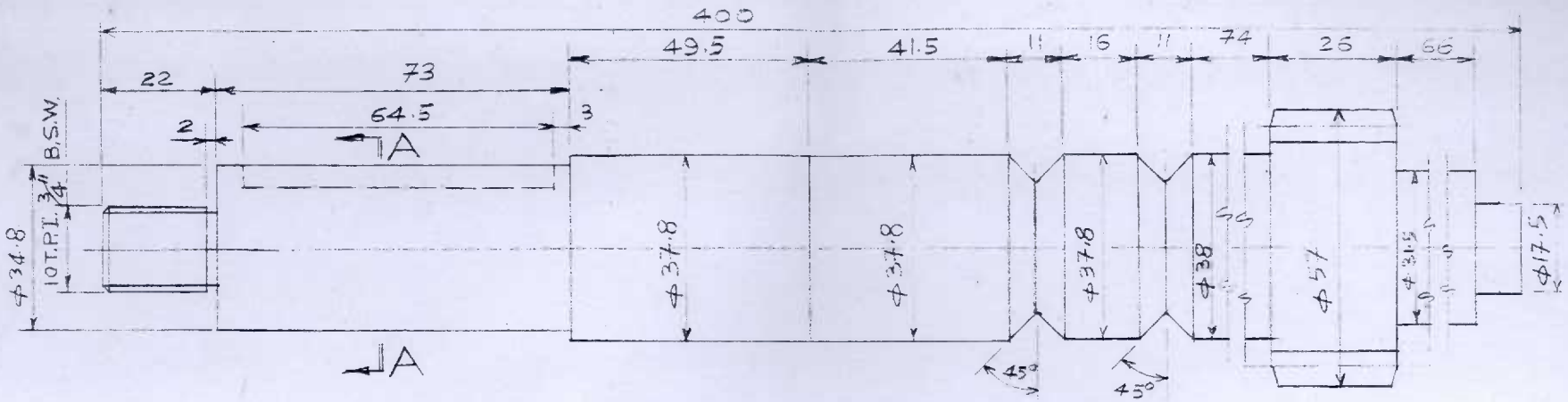

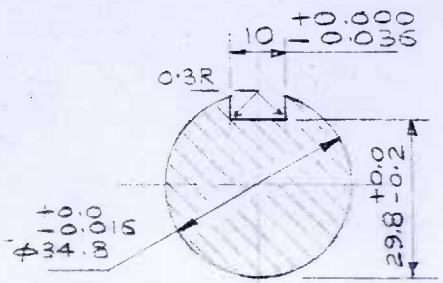

A-A

DESIGN BUREAU C.F.F.P.
ISSUED ON
15 JUL 2017
B.H.E.L., HARDWAR

DATA

O.D. = 57
NO. OF TEETH = 16
D.P. = 8
PRESSURE ANGLE = 20° INVOLUTE
TOOTH DEPTH = 7
MATERIAL = EN-18

NOTE:-

1. ALL SHARP CORNERS TO BE ROUNDED OFF.
2. DRG. NO TO BE PUNCHED ON ITEM

BHARAT HEAVY ELECTRICALS LTD.
UNIT : CENTRAL FOUNDRY FORGE PLANT. HARDWAR.

REV.	DATE.	ALTERED / CHECKED	REV.	DATE.	ALTERED / CHECKED	REV.	DATE.	ALTERED / CHECKED

DEPTT. DESIGN BUREAU | SCALE 1:1 | WEIGHT (KGS.) 4.00 | REF. to ASSY. DRG. | ITEM NO.

TITLE: PINION SHAFT FOR HAND MOVEMENT OF CARRIAGE CRAVAN LATHE 7M

	NAME	SIGN.	DATE
DRAWN	GUPTA MK		02.5.90
CHECKED	GUPTA		
APPROVED	GUPTA PS		2.5.90

Dimensions to be Controlled Within Limits as Shown
Machining Tolarence ± 0.25 mm Unless Otherwise Shown. Non Machining Tolerence ±

DRAWING NO. 04.29.031 | REV. 0

SHEET NO. 1 | TOTAL SHEETS 1

25

SIZE-A 3

[illegible] ANGLE PROJECTION (ALL DIMENSIONS ARE IN [illegible])

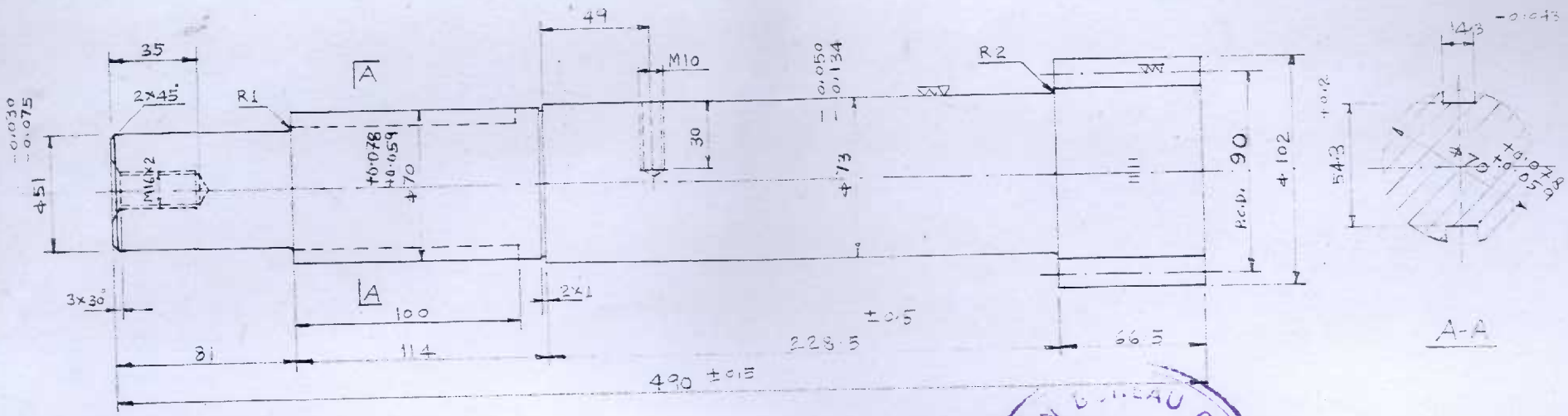

NO.	DESCRIPTIONS	DATA
1	NO. OF TEETH (SPUR)	15
2.	MODULE	6 △1
3.	PRESSURE ANGLE	20°
4.	TOOTH DEPTH	13.2
5.	TOOTH HARDENING	HRC 45-50

DESIGN BUREAU C.F.F.P. ISSUED ON 15 JUL 2017 B.H.E.L., HARDWAR

MATCHING BUSH DRG. NO. 04-29-034 035

1. DRG. NO. TO BE PUNCHED ON THE JOB.
2. GEAR TEETH SHOULD BE GRIND FINISH AFTER HARDENING

The information on this document is the property of BHARAT HEAVY ELECTRICALS LIMITED. It must not be used directly or indirectly in any way deterimental to the interest of the company

Ref. Drg. No. SAMPLE

Sign & Date

Inventory No. FF8251020174

ALL SHARP CORNERS TO BE ROUNDED OFF. MATERIAL- EN-24

REV.	DATE	ALTERED / CHECKED	REV.	DATE	ALTERED / CHECKED	REV.	DATE	ALTERED / CHECKED
						R1	15.06	

CHANGE DP FROM 4 TO MODULE 6

BHARAT HEAVY ELECTRICALS LIMITED.
UNIT: CENTRAL FOUNDRY FORGE PLANT.
HARDWAR

DEPTT.	SCALE	WEIGHT(KGS.)	REF. to ASSY. DRG.	ITEM NO.
DESIGN BUREAU	1:2	14.0		

TITLE: PINION SHAFT FOR 7 M. LATHE M/C. SHOP.

	NAME	SIGN.	DATE
DRAWN	ASHOK KUMAR		9-6-17
CHECKED	PARAG GUPTA		
APPROVED	PARAG GUPTA		

Dimensions to be controlled Within Limits as Shown Machining Tolerence± 0.25 mm Unless Otherwise Shown. Non Machining Tolerence ±

DRAWING NO. 04-29-033 REV. R1

SHEET NO. NO. OF SHEETS

SIZE-A.3

FIRST ANGLE PROJECTION (ALL DIMENSIONS ARE IN MM)

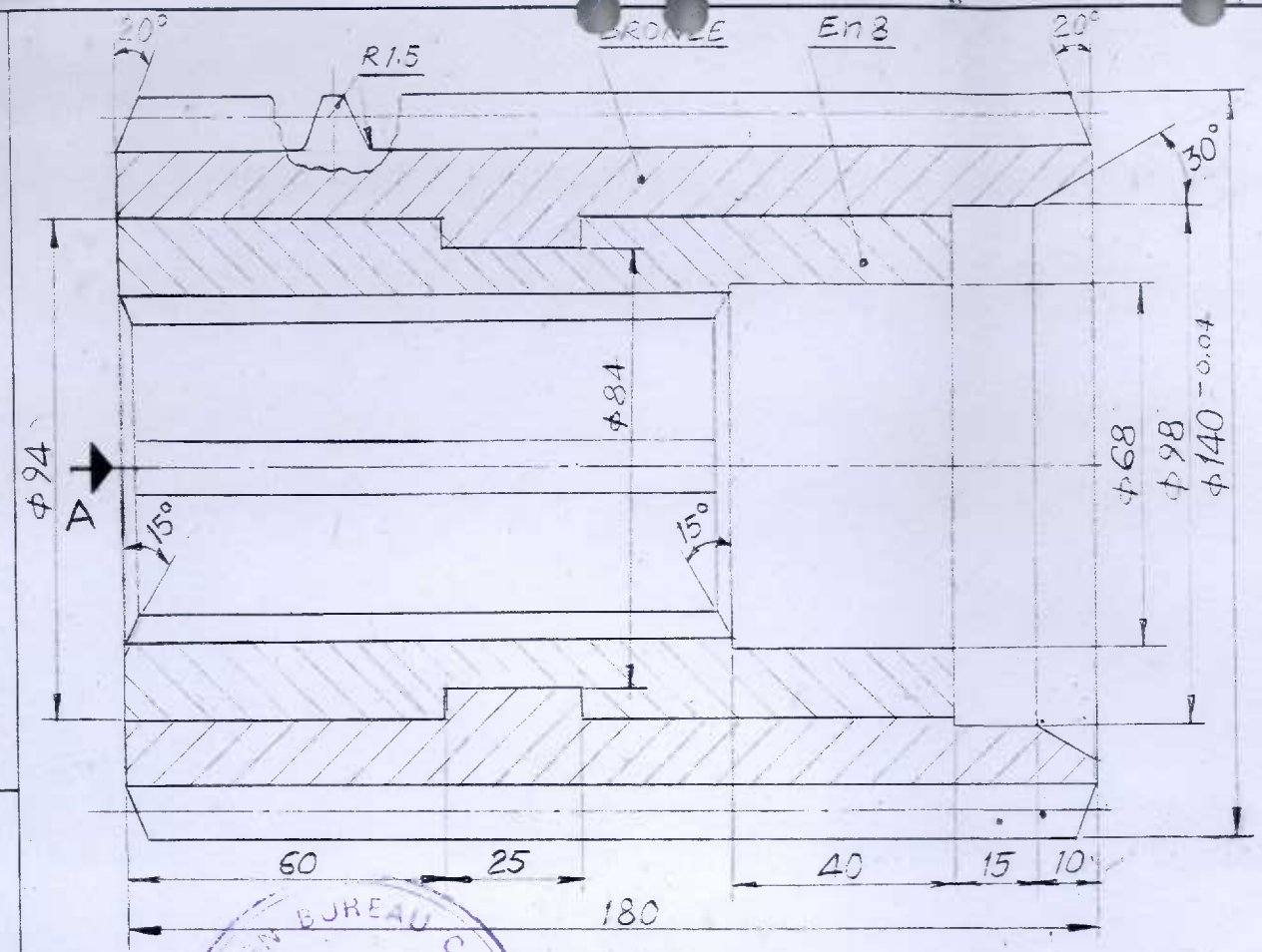

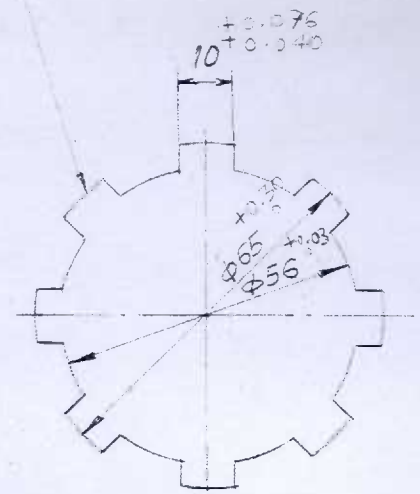

VIEW A

MODULE	5
NO. OF START	2
LEAD ANGLE	4°23'55"
PRESSURE ANGLE	20°
TOOTH DEPTH	11
MATERIAL	BRONZE En 8
PCD	130
PITCH	15.71
DIRECTION	R.H.

NOTE: 1. DRG. NO. TO BE PUNCHED ON ITEM
2. GEAR TEETH SHOULD BE GRIND FINISH AFTER HARDENING

DESIGN BUREAU C.F.F.P. ISSUED ON 15 JUL 2017 BHEL, HARDWAR

The information on this document is the property of BHARAT HEAVY ELECTRICALS LIMITED
It must not be used directly or indirectly in anyway detrimental to the interest of the company.

Ref. Drg. No.

Sign & Date

Inventory No. FF3251570031

MATERIAL :

REV.	DATE	ALTERED / CHECKED	REV.	DATE	ALTERED / CHECKED	REV.	DATE	ALTERED / CHECKED

BHARAT HEAVY ELECTRICALS LTD.
UNIT : CENTRAL FOUNDRY FORGE PLANT
HARDWAR

DEPTT.	SCALE	WEIGHT (KGS.)	REF. to ASSY. DRG.	ITEM NO.
DESIGN	1:1			

TITLE: WORM GEAR
3rd HEAD PLANO MILLING MACHINE

	NAME	SIGN.	DATE
DRAWN	[illegible]	[illegible]	[illegible]
CHECKED	K. LAL	[illegible]	[illegible]
APPROVED	[illegible]	[illegible]	[illegible]

Dimensions to be Controlled Within Limits as Shown
Machining Tolarance±0. 25 mm Unless Otherwise
Shown. Non Machining Tolerence ±

DRAWING NO. 04.31.01F REV. 0

SHEET NO. 1 NO. OF SHEETS 1

23

FIRST ANGLE PROJECTION (ALL DIMENSIONS ARE IN mm)

DRAWING NUMBER

REV.

The information on this document is the property of BHARAT HEAVY ELECTRICALS LIMITED. It must not be used directly or indirectly in anyway deterimental to the interest of the company.

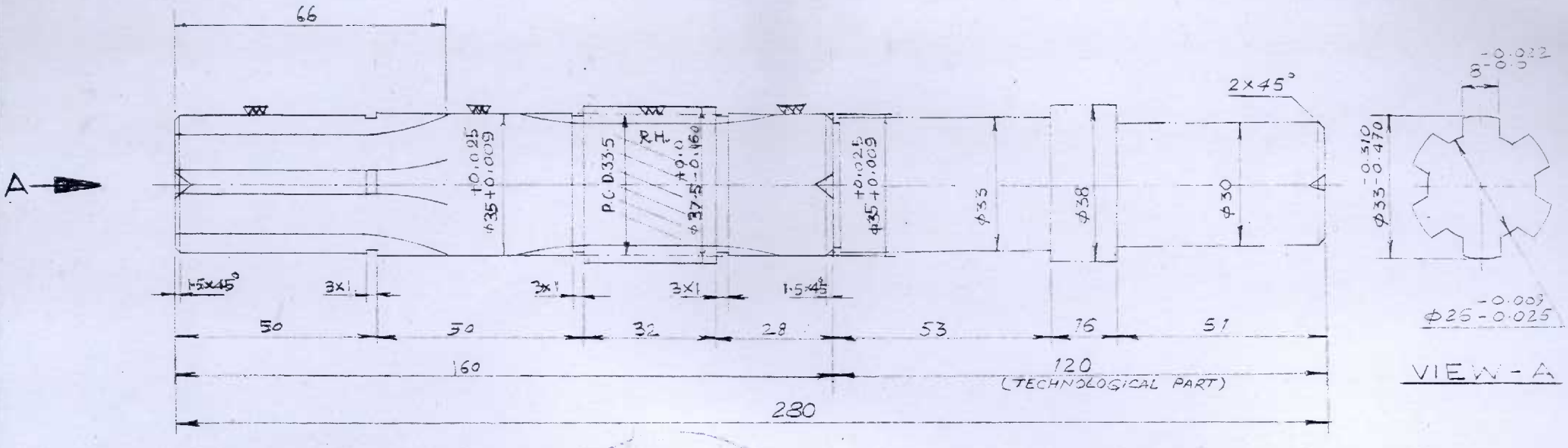

NO.	DESCRIPTIONS	DATA
1.	NO. OF TEETH	15
2.	MODULE	2
3.	PRESSURE ANGLE	20°
4.	HELIX ANGLE	19°31′30″
5.	DIRECTION	R.H.
6.	TOOTH DEPTH	4.5
7.	MATERIAL	EN-24
8.	HARDENING	HRC-45-50
9.	CORRECTION FACTOR	+ 0.4
10.	MATCHING DRG. NO.	04.33.037

DESIGN BUREAU C.F.F.P. ISSUED ON 15 JUL 2017 BHEL HARDWAR

NOTE:
DRAWING No. TO BE PUNCHED ON ITEM.
TEETH GRINDING REQD. AFTER HARDENING.

REV	DATE	ALTERED / CHECKED
R1	6.4.92	

HELIX ANGLE & CORRECTION FACTOR CHANGED

TYPE OF PRODUCT OR NAME OF CUSTOMER / PROJECT: SAMPLE.

BHARAT HEAVY ELECTRICALS LTD.
UNIT: C.F.F.P., HARDWAR.

DEPT.	CODE	SCALE 1:1	WEIGHT (KG)	REF. TO ASSY. DRG.	ITEM NO.

HELICAL PINION SHAFT
W.D. - 220

	NAME	SIGN.	DATE
DRAWN			
CHECKED			
APPROVED			

Dimensions to be Controlled Within Limits as Shown Machining Tolerence ± ·25 mm Unless Otherwise Shown, Non Machining Tolerence ±

CARD CODE

DRAWING NO. 04-33-009 REV. R1

SHEET NO. 1 NO. OF SHEETS.

SIZE A3

24660-10408 Ref. Drg. No.

Sign. & Date

FF-82515-70294 Inventory No.

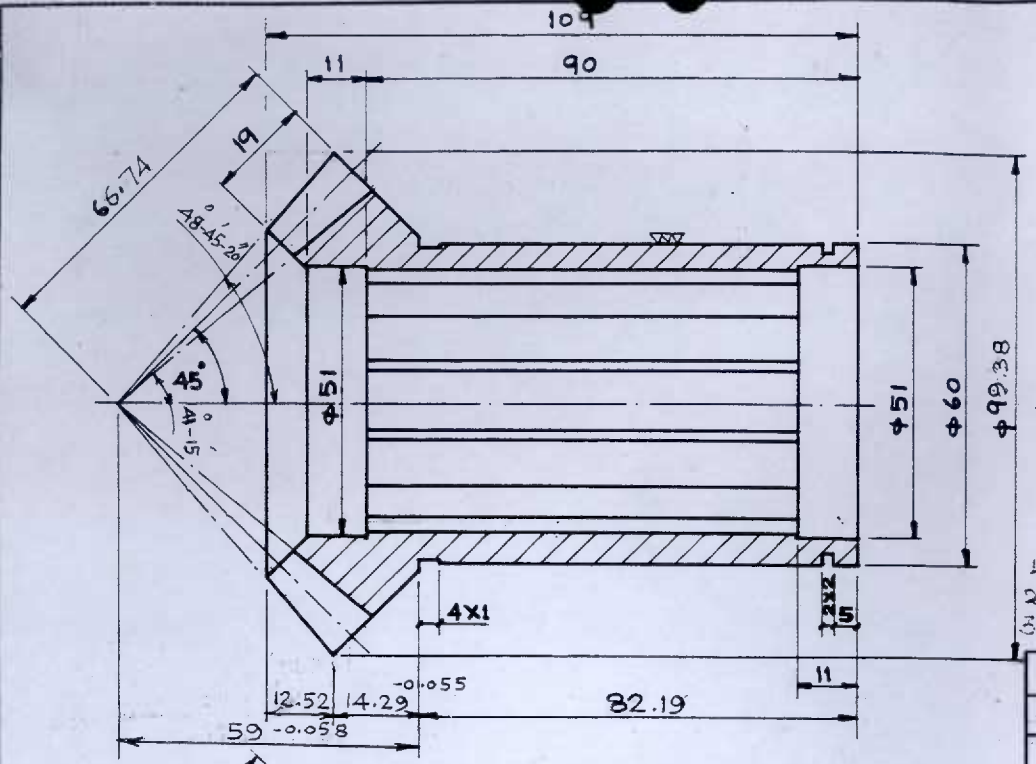

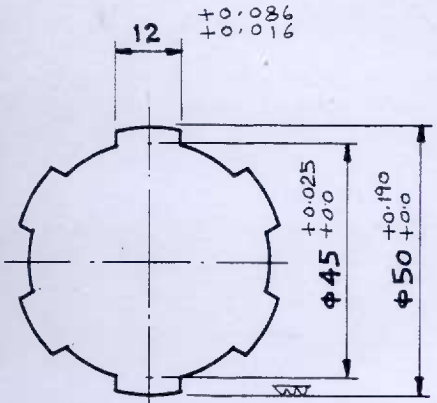

1. GEAR TEETH SHOULD BE GRIND FINISH AFTER HARDENING.
2. BOTH GEARS ARE MATCHING.
3. DRG. NO. TO BE PUNCHED

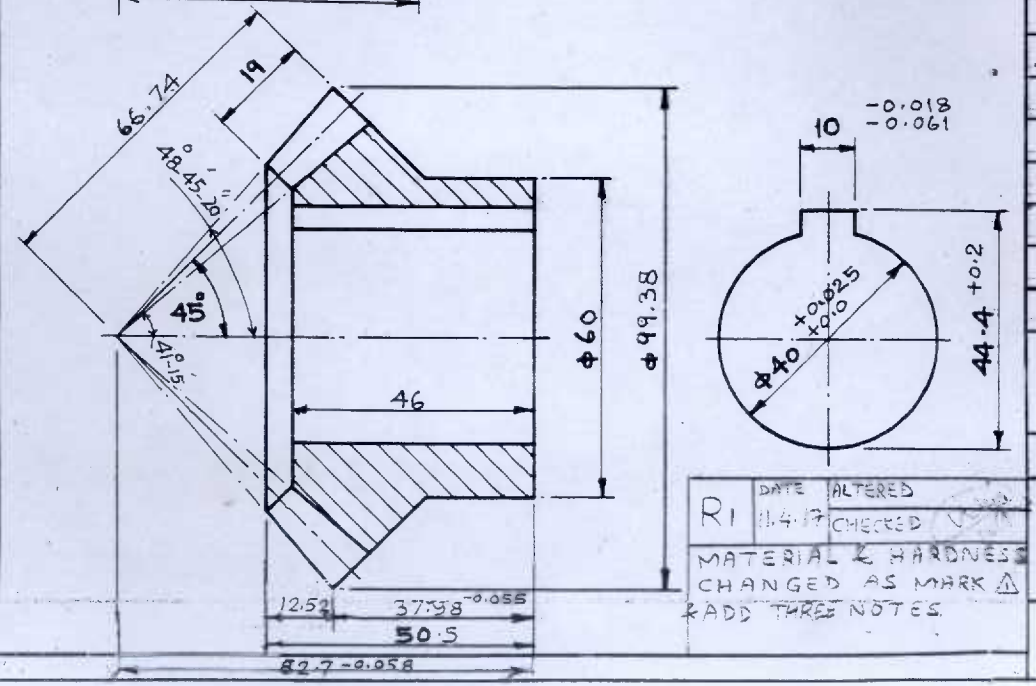

NO.	DESCRIPTIONS	1	2
8.	PART NO.	5315213	5315218
7.	HARDNESS - HRC.	△ 45-50	△ 45-50
6.	MATERIAL	EN-24 △	EN-24 △
5.	DIRECTION	L.H.	R.H.
4.	SPIRAL ANGLE	35°	35°
3.	PRESSURE ANGLE	20°	20°
2.	MODULE	4.5	4.5
1.	NO. TEETH	19	19

R1	DATE	ALTERED
	11.4.17	CHECKED

MATERIAL & HARDNESS CHANGED AS MARK △
& ADD THREE NOTES.

BHARAT HEAVY ELECTRICALS LTD.
UNIT : CENTRAL FOUNDRY FORGE PLANT.
HARDWAR.

DEPTT. F.E. | SCALE 1:1 | WEIGHT (KGS.) | DRG. MADE FROM MODEL IM553

TITLE: SPIRAL BEVEL GEAR & PINION FOR V. BORER 2.1
MODEL - IM553

	NAME	SIGN.	DATE
DRAWN	Ashok		23-11-87
WORKED			
CHECKED	[illegible]		28-11-87
APPROVED			

DRAWING NO. 04.36.007 R1
SHEET NO. 1 | NO. OF SHEETS 1

SIZE - A3

DESIGN C.F.F.P. ISSUED ON 15 JUL 2017 B.H.E.L., HARDWAR

HUDEMATORY NO. FF82.5/01/0438

21

ANGLE PROJECTION (ALL DIMENSIONS ARE IN M.M.)

The information on this document is the property of BHARAT HEAVY ELECTRICALS LIMITED.
It must not be used directly or indirectly in any way deterimental to the interest of the company

Ref. Drg. No. HEEP S.512.22, IM552/557-SP-20

Sign & Date

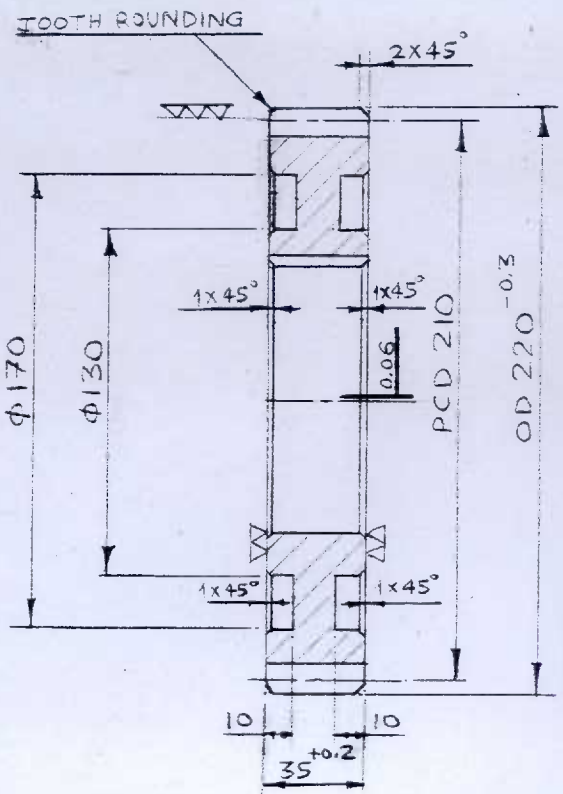

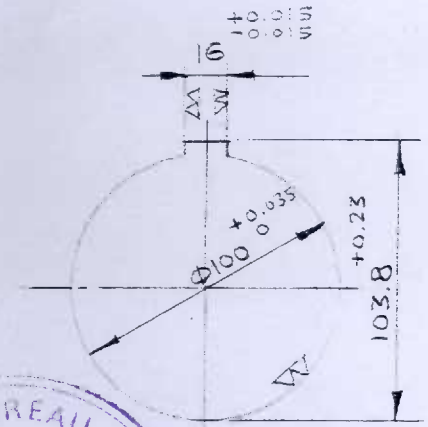

MODULE	5
NO. OF TEETH	42
PRESSURE ANGLE	20°
CORRECTION COEFF.	0
LENGTH OF COMMON NORMAL (5-TEETH)	69.18 -0.070
MATING DRG. NO.	

DESIGN BUREAU C.F.F.P. ★ B.H.E.L., HARDWAR ★ ISSUED ON 15 JUL 2017

CASE CARBURIZING UP TO DEPTH OF 0.8-1.0 MM
HARDENED TO HRC 56-58
GEAR TEETH SHOULD BE GRIND AFTER HARDENING.
DRG. NO. TO BE PUNCED ON THE ITEM.

ALL SHARP CORNERS TO BE ROUNDED OFF.

MATERIAL- EN 36

BHARAT HEAVY ELECTRICALS LIMITED.
UNIT:CENTRAL FOUNDRY FORGE PLANT.
HARDWAR

REV.	DATE	ALTERED / CHECKED	REV.	DATE	ALTERED / CHECKED	REV.	DATE	ALTERED / CHECKED

Inventory No. H8251010434

DEPTT. DESIGN BUREAU	SCALE 1:2	WEIGHT(KGS.) 8.9	REF. to ASSY. DRG.	ITEM NO.

TITLE SPUR GEAR FOR SHAFT NO.3 (SPEED BOX) V. BORING MACHINE-IM 553

	NAME	SIGN.	DATE
DRAWN	KISHOR LAL		27.1.95
CHECKED	PBG		
APPROVED	PBS		

Dimensions to be controlled Within Limits as Shown Machining Tolerence± 0.25 mm Unless Otherwise Shown. Non Machining Tolerence ±

DRAWING NO. 04.36.023 REV 0

SHEET NO. 1 NO. OF SHEETS 1

SIZE-A 3

FIRST ANGLE PROJECTION (ALL DIMENSIONS ARE IN M.M.)

DESIGN BUREAU C.F.F.P. ISSUED ON 15 JUL 2017 B.H.E.L. HARDWAR

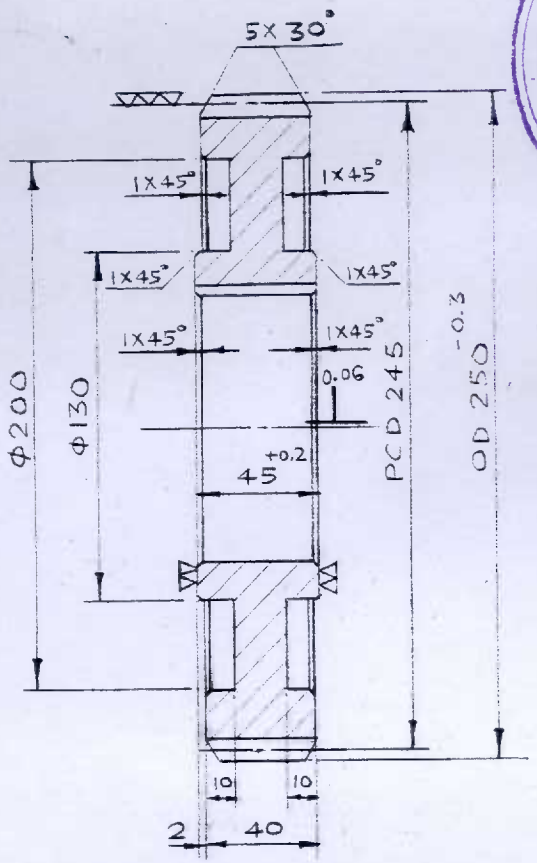

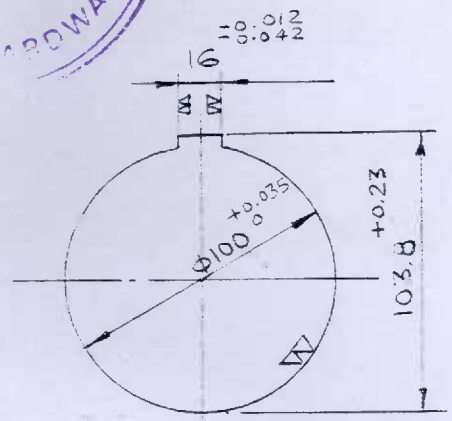

MODULE	5
NO. OF TEETH	49
PRESSURE ANGLE	20°
CORRECTION COEFF.	-0.5
LENGTH OF COMMON NORMAL (6 TEETH)	82.73 -0.06
MATING DRG. NO.	

NOTES:

1. GEAR TEETH SHOULD BE GRIND FINISH AFTER HARDENING
2. DRAWING NO TO BE PUNCHED ON ITEM
3. CASE CARBURIZING UP TO DEPTH OF 0.8-1.0MM
4. HARDENED TO HRC 56-58

The information on this document is the property of BHARAT HEAVY ELECTRICALS LIMITED: It must not be used directly or indirectly in any way detrimental to the interest of the company

Ref. Drg. No. HELP 5512228A IM553/557-SP-40

Sign & Date

ALL SHARP CORNERS TO BE ROUNDED OFF. MATERIAL- EN 36

REV.	DATE	ALTERED CHECKED	REV.	DATE	ALTERED CHECKED	REV.	DATE	ALTERED CHECKED

Inventory No. FF825101046/2

BHARAT HEAVY ELECTRICALS LIMITED.
UNIT: CENTRAL FOUNDRY FORGE PLANT. HARDWAR

DEPTT. DESIGN BUREAU	SCALE 1:2	WEIGHT (KGS.) 13.9	REF. to ASSY. DRG.	ITEM NO.

TITLE SPUR GEAR FOR SHAFT NO. 3 (SPEED BOX) V. BORING M/C IM553

	NAME	SIGN.	DATE
DRAWN	KISHORI LAL		28.9.16
CHECKED	PBG		
APPROVED	PBG		

Dimensions to be controlled Within Limits as Shown Machining Tolerence ± 0.25 mm Unless Otherwise Shown. Non Machining Tolerence ±

DRAWING NO. 04.36.024 REV. 0

SHEET NO. 1 NO. OF SHEETS 1

19

SIZE-A.3

T ANGLE PROJECTION (ALL DIMENSIONS A N M.M

▽(▽▽, ▽▽▽)

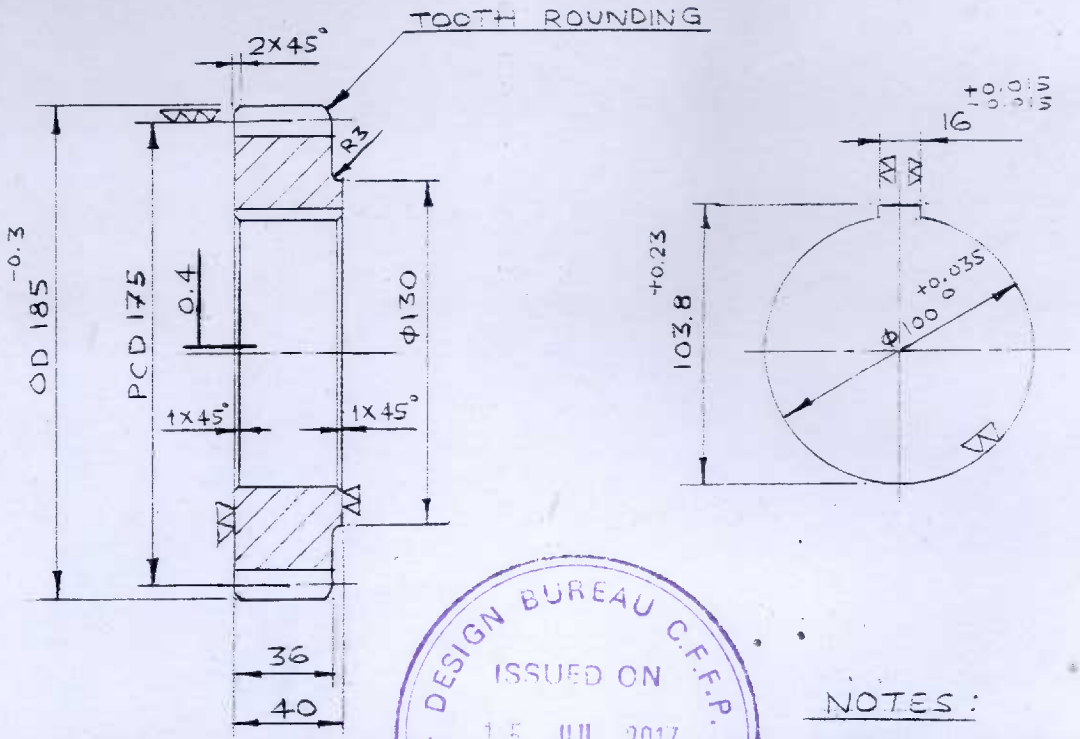

MODULE	5
NO. OF TEETH	35
PRESSURE ANGLE	20°
CORRECTION COEFF.	0
LENGTH OF COMMON NORMAL	68.74 +0.050
MATING DRG. NO.	

DESIGN BUREAU C.F.F.P. ISSUED ON 15 JUL 2017 BHEL HARDWAR

NOTES:

GEAR TEETH SHOULD BE GRIND AFTER FINISH HARDENING.

CASE CARBURIZING UP TO DEPTH OF 0.8-1.0MM

HARDENED TO HRC 56-58

DRAWING NO TO BE PUNCHED ON ITEM.

The information on this document is the property of BHARAT HEAVY ELECTRICALS LIMITED. It must not be used directly or indirectly in any way determental to the interest of the company.

Ref. Drg. No. HEEP 5512229 IM553/557-SP-45

Sign & Date

Inventory No. F1825 10104 70

ALL SHARP CORNERS TO BE ROUNDED OFF. MATERIAL- EN 36

REV.	DATE	ALTERED / CHECKED	REV.	DATE	ALTERED / CHECKED	REV.	DATE	ALTERED / CHECKED

BHARAT HEAVY ELECTRICALS LIMITED.
UNIT:CENTRAL FOUNDRY FORGE PLANT.
HARDWAR

DEPTT.	SCALE	WEIGHT(KGS.)	REF. to ASSY. DRG.	ITEM NO.
DESIGN BUREAU	1:2	6.0		

TITLE SPUR GEAR FOR SHAFT NO. 3 (SPEED BOX) V. BORING M/C IM 553

	NAME	SIGN.	DATE
DRAWN	KISHORI LAL		
CHECKED	P.E.S		
APPROVED	P.E.S		

Dimensions to be controlled Within Limits as Shown Machining Tolerence± 0.25 mm Unless Otherwise Shown. Non Machining Tolerence ±

DRAWING NO 04.36.025 REV. 0

SHEET NO. 1 NO. OF SHEETS 1

SIZE-A.3

FIRST ANGLE PROJECTION (ALL DIMENSIONS ARE IN M.M.)

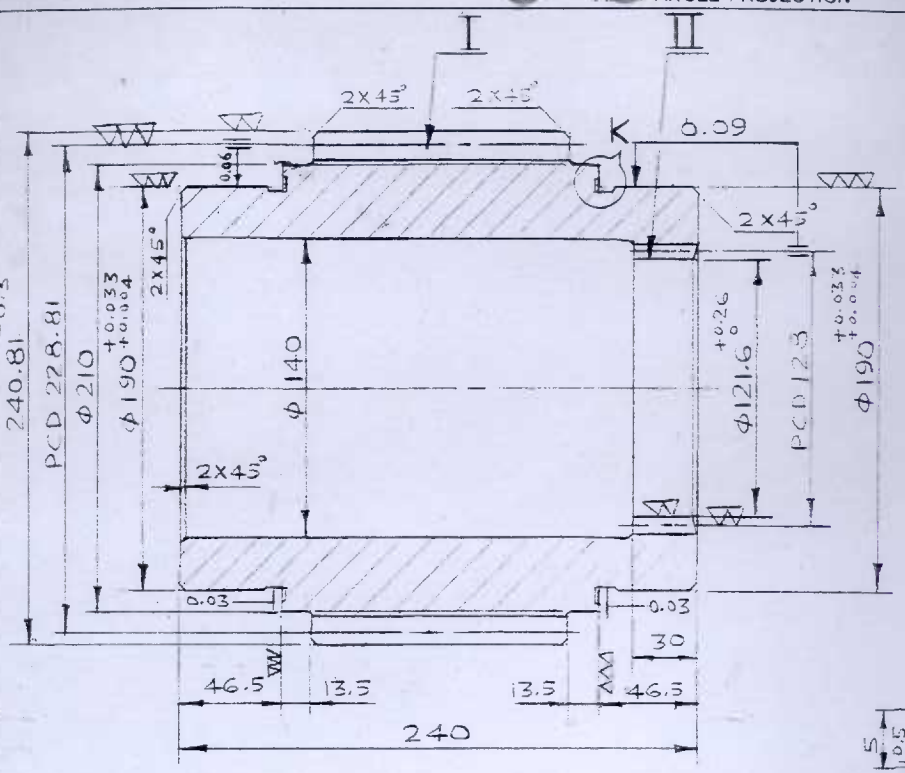

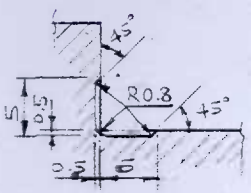

DETAIL-K
SCALE 2:1

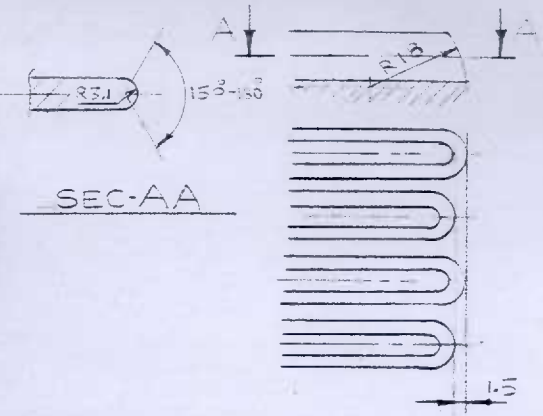

SEC-AA

FORM OF INTERNAL GEAR FACE ROUNDING

	I	II
MODULE	6	4
NO. OF TEETH	37	32
PRESSURE ANGLE	20°	20°
HAND OF HELIX	R.H.	–
TOOTH ANGLE	14°	–
LENGTH OF COMMON NORMAL	$82.9^{-0.07}$	–
MATCHING PART DRG. NO		

DESIGN BUREAU C.F.F.P. ISSUED ON 15 JUL 2017 B.H.E.L., HARDWAR

NOTES:

1. GEAR TEETH SHOULD BE GRIND, AFTER HARDENING FINISH
2. DRG. NO. TO BE PUNCED ON THE ITEM.
3. RELATIVE RUNOUT OF BEARINGS φ190 $^{+0.033}_{+0.004}$ IS NOT MORE THAN 0.02.
4. HEAT TREATMENT OF EN24-STRUCTURAL IMPROVEMENT.
5. HEAT TREATMENT OF TOOTH RIM-INDUCTION HARDENING, HRC 45-50

ALL SHARP CORNERS TO BE ROUNDED OFF. MATERIAL- EN 24

REV.	DATE	ALTERED CHECKED	REV.	DATE	ALTERED CHECKED	REV.	DATE	ALTERED CHECKED

BHARAT HEAVY ELECTRICALS LIMITED.
UNIT:CENTRAL FOUNDRY FORGE PLANT.
HARDWAR

DEPTT.- DESIGN BUREAU | SCALE 1:2.5 | WEIGHT(KGS.) 21.0 | REF. to ASSY. DRG. | ITEM NO.

TITLE MIDDLE GEAR OF THIRD SHAFT FOR SPEED GEAR BOX OF TABLE, VT37.

	NAME	SIGN.	DATE
DRAWN	KISHORI LAL		
CHECKED	P.B.S.		
APPROVED	P.B.S.		

Dimensions to be controlled Within Limits as Shown Machining Tolerence ± 0.25 mm Unless Otherwise Shown. Non Machining Tolerence ±

DRAWING NO. 04.37.020 REV. 0

SHEET NO. 1 NO. OF SHEETS 1

Ref. Drg. No. 1563.21.356

Sign & Date

Inventory No. FH82510610

The information on this document is the property of BHARAT HEAVY ELECTRICALS LIMITED. It must not be used directly or indirectly in any way deterimental to the interest of the company.

12

F ANGLE PROJECTION (ALL DIMENSIONS ARE IN M.M.)

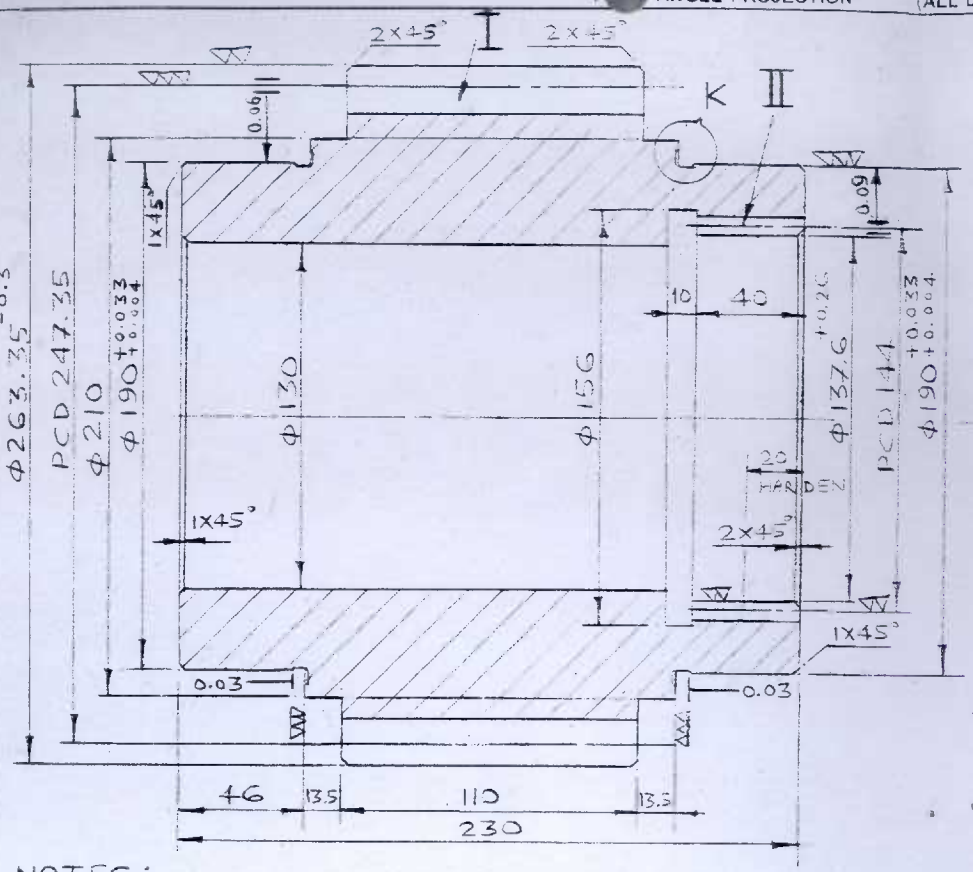

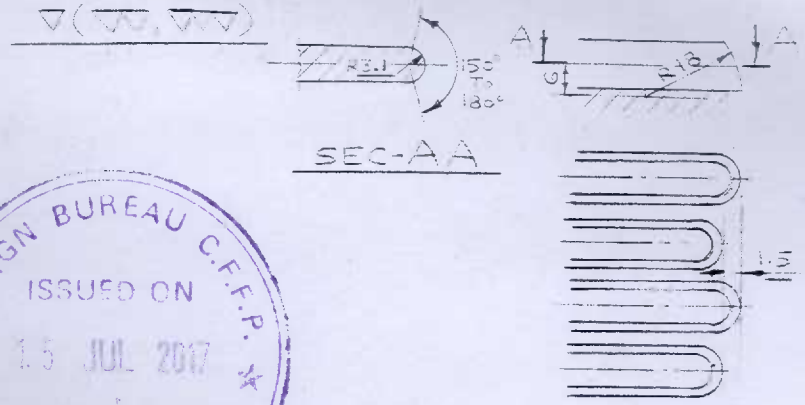

FORM OF INTERNAL GEAR FACE ROUNDING

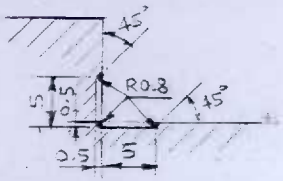

DETAIL-K
SCALE 2:1

	I	II
MODULE	8	4
NO. OF TEETH	30	36
PRESSURE ANGLE	20°	20°
HAND OF HELIX	R.H.	–
TOOTH ANGLE	14°	–
LENGTH OF COMMON NORMAL	$86.13^{-0.07}$	–
MATCHING PART DRG.NO.		

NOTES:

1. GEAR TEETH SHOULD BE GRIND FINISH AFTER HARDENING.
2. RELATIVE RUNOUT OF BEARINGS Φ190 +0.033 +0.004 IS NOT MORE THAN 0.02.
3. HEAT TREATMENT OF EN24-STRUCTURAL IMPROVEMENT.
4. HEAT TREATMENT OF TOOTH RIM-INDUCTION HARDENING, HRC 45-50
5. DRG. NO TO BE PUNCHED ON THE ITEM.

ALL SHARP CORNERS TO BE ROUNDED OFF. MATERIAL- EN 24

REV.	DATE	ALTERED / CHECKED	REV.	DATE	ALTERED / CHECKED	REV.	DATE	ALTERED / CHECKED

First Gear of Fifth shaft

BHARAT HEAVY ELECTRICALS LIMITED.
UNIT:CENTRAL FOUNDRY FORGE PLANT.
HARDWAR

DEPTT., DESIGN BUREAU | SCALE 1:2 | WEIGHT(KGS.) 44.0 | REF. to ASSY. DRG. | ITEM NO.

TITLE FIRST GEAR OF FIFTH SHAFT FOR SPEED GEAR BOX OF TABLE VT37

	NAME	SIGN.	DATE
DRAWN	KISHORI LAL		16.1.01
CHECKED			
APPROVED			

Dimensions to be controlled Within Limits as Shown Machining Tolerence± 0.25 mm Unless Otherwise Shown. Non Machining Tolerence ±

DRAWING NO. 04.37.021 | REV. 0

SHEET NO. 1 | NO. OF SHEETS 1

Inventory No. FF82511S0C2

Ref. Drg. No. 1563.21.350

Sign & Date

The information on this document is the property of BHARAT HEAVY ELECTRICALS LIMITED. It must not be used directly or indirectly in any way deterimental to the interest of the company.

DESIGN BUREAU C.F.F.P. ISSUED ON 15 JUL 2017 B.H.E.L., HARDWAR

SIZE A2

FIRST ANGLE PROJECTION (ALL DIMENSIONS ARE IN M.M.)

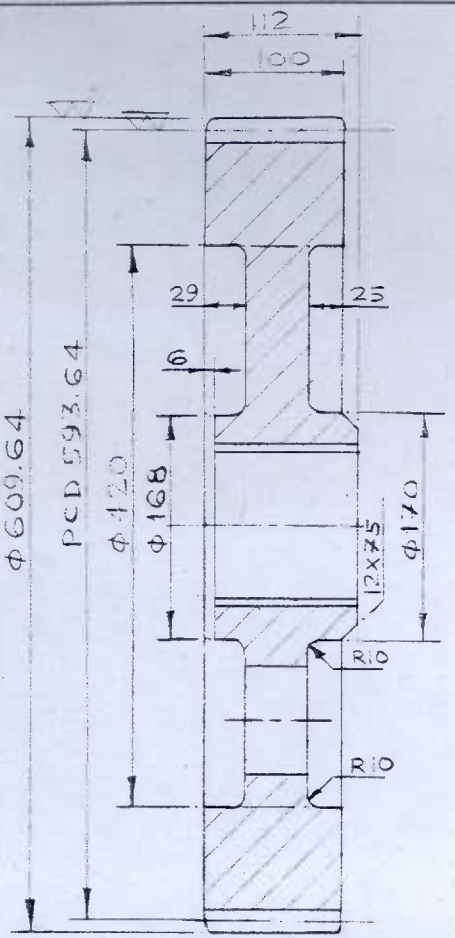

SEC-AA

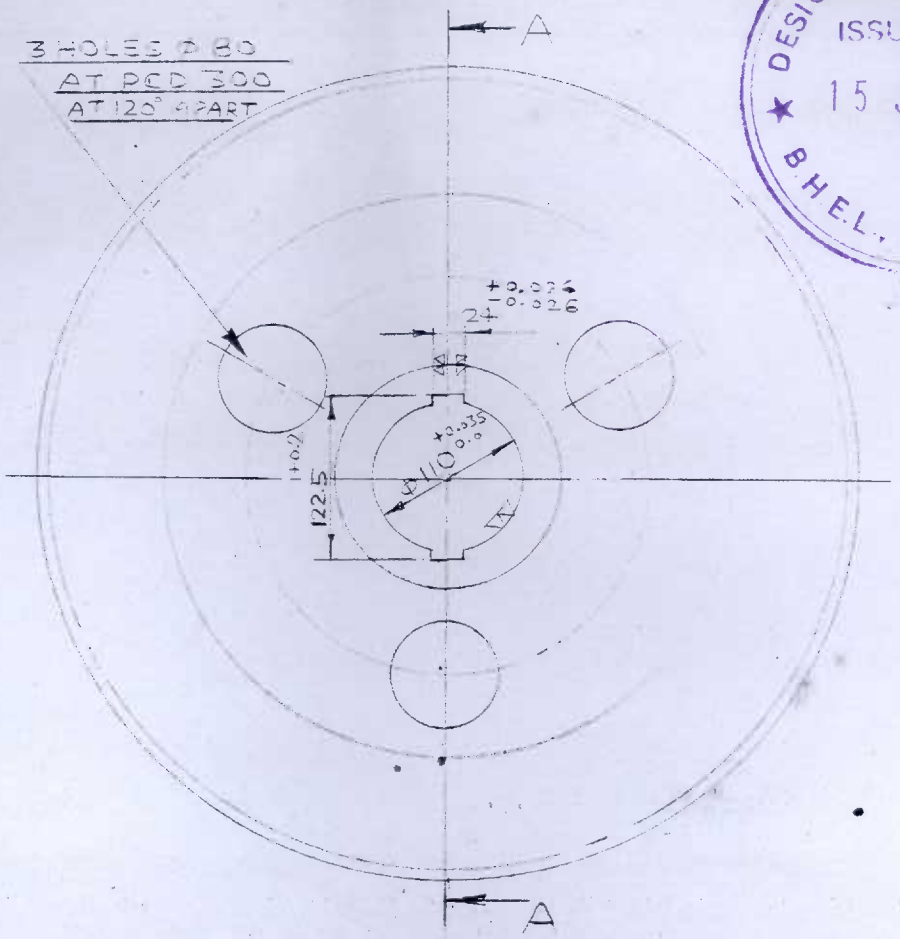

DESIGN BUREAU C.F.F.P. ★ ISSUED ON 15 JUL 2017 ★ BHEL, HARDWAR

MODULE	8
NO. OF TEETH	72
PRESSURE ANGLE	20°
HELIX ANGLE	14°
DIRECTION OF HELIX	L.H.
MEASURED LENGTH OF 9 TEETH	209.4
MATING PART DRG. NO.	04,37,024

GEAR TEETH SHOULD BE GRIND FINISH AFTER HARDENING

NOTES:-

1. HARDENING OF TEETH TO HRC 50-55
2. DRG. NO. TO BE PUNCHED ON THE ITEM.

ALL SHARP CORNERS TO BE ROUNDED OFF.

MATERIAL- 40NiCrMo7M028

The information on this document is the property of BHARAT HEAVY ELECTRICALS LIMITED. It must not be used directly or indirectly in any way deterimental to the interest of the company.

Ref. Drg. No. HEEP 1563-SP-14 & 1550T-SP-15

Sign & Date

Inventory No. FF 02 S 1150043

REV.	DATE	ALTERED CHECKED	REV.	DATE	ALTERED CHECKED	REV.	DATE	ALTERED CHECKED

BHARAT HEAVY ELECTRICALS LIMITED.
UNIT: CENTRAL FOUNDRY FORGE PLANT.
HARDWAR

DEPTT. DESIGN BUREAU | SCALE 1:4 | WEIGHT(KGS.) 156.0 | REF. to ASSY. DRG. | ITEM NO.

TITLE FIRST GEAR OF FORTH SHAFT FOR MAIN SPEED GEAR BOX (CHUCK) VTB 7.1

	NAME	SIGN.	DATE
DRAWN	[illegible]		[illegible]
CHECKED	PARAS		
APPROVED	PARAS		7.3.21

Dimensions to be controlled Within Limits as Shown Machining Tolerence ± 0.25 mm Unless Otherwise Shown. Non Machining Tolerance ±

DRAWING NO. 04,37,023 | REV. 0

SHEET NO. 1 | NO. OF SHEETS 1

15

SIZE-A.3

ST ANGLE PROJECTION (ALL DIMENSIONS ARE IN M.M)

The information on this document is the property of BHARAT HEAVY ELECTRICALS LIMITED.
It must not be used directly or indirectly in any way deterimental to the interest of the company.

Ref. Drg. No. HEEP 1563-SP-

Sign & Date

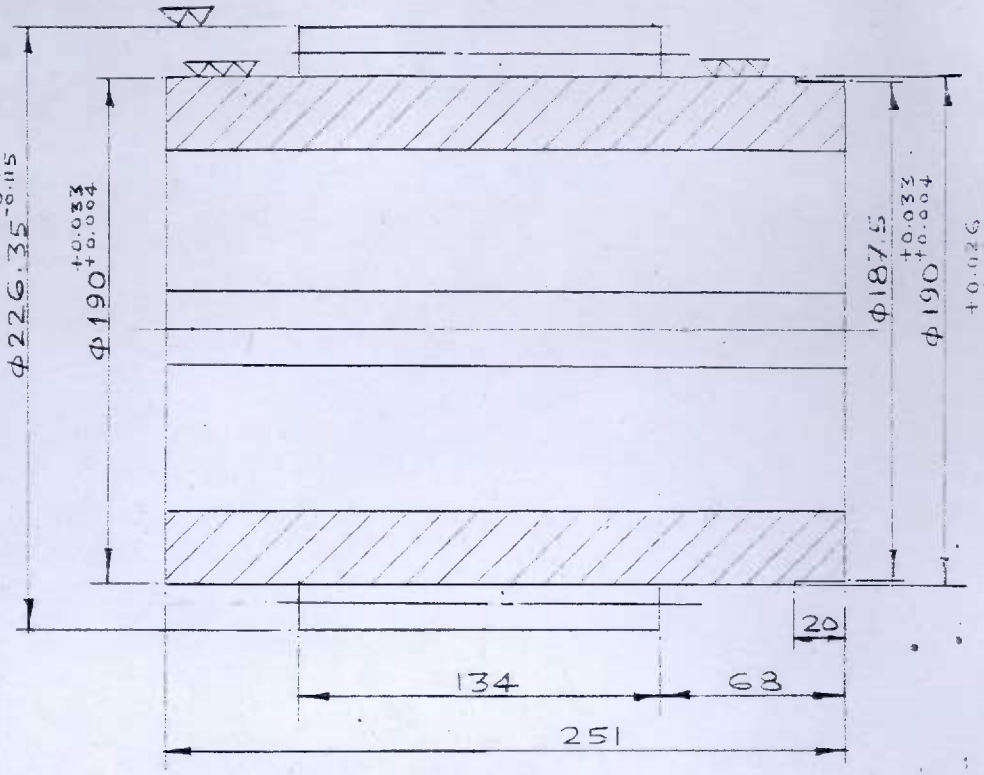

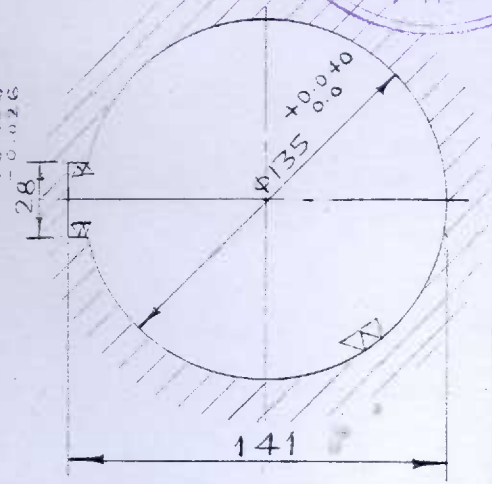

DESIGN BUREAU C.F.F.P. ★ B.H.E.L., HARDWAR ★
ISSUED ON 15 JUL 2017

MODULE	8
NO. OF TEETH	24
PRESSURE ANGLE	20°
HELIX ANGLE	14°
DIRECTION	R.H.
CORRECTION CO-EFF.	+0.78
LENGTH OF COMMON NORMAL (3 TEETH)	66.034 -0.165 -0.22
C.D	402
MATING PART DRG.NO.	04.37.023

NOTES:-

1. INDUCTION HARDENING OF TEETH TO HRC 50-55
2. DRG. NO. TO BE PUNCHED ON THE ITEM.

GEAR TEETH SHOULD BE GRIND FINISH AFTER HARDENING

ALL SHARP CORNERS TO BE ROUNDED OFF.

MATERIAL- 40NiCrMo28

REV.	DATE	ALTERED CHECKED	REV.	DATE	ALTERED CHECKED	REV.	DATE	ALTERED CHECKED

Inventory No. FH82S115 0051

BHARAT HEAVY ELECTRICALS LIMITED.
UNIT:CENTRAL FOUNDRY FORGE PLANT.
HARDWAR

DEPTT.	SCALE	WEIGHT(KGS.)	REF. to ASSY. DRG.	ITEM NO.
DESIGN BUREAU	1:2	34.0		

TITLE FIRST GEAR OF THIRD SHAFT FOR MAIN SPEED GEAR BOX (CHUCK) VTS 7.1

	NAME	SIGN.	DATE
DRAWN	KISHOR LAL		7.7.2017
CHECKED	PARAG		
APPROVED	PARAG		7.7.17

Dimensions to be controlled Within Limits as Shown Machining Tolerence ± 0.25 mm Unless Otherwise Shown. Non Machining Tolerence ±

DRAWING NO. 04,37,024 REV 0

SHEET NO. 1 NO. OF SHEETS 1

SIZE-A 3

14

T ANGLE PROJECTION (ALL DIMENSIONS ARE IN M.M.)

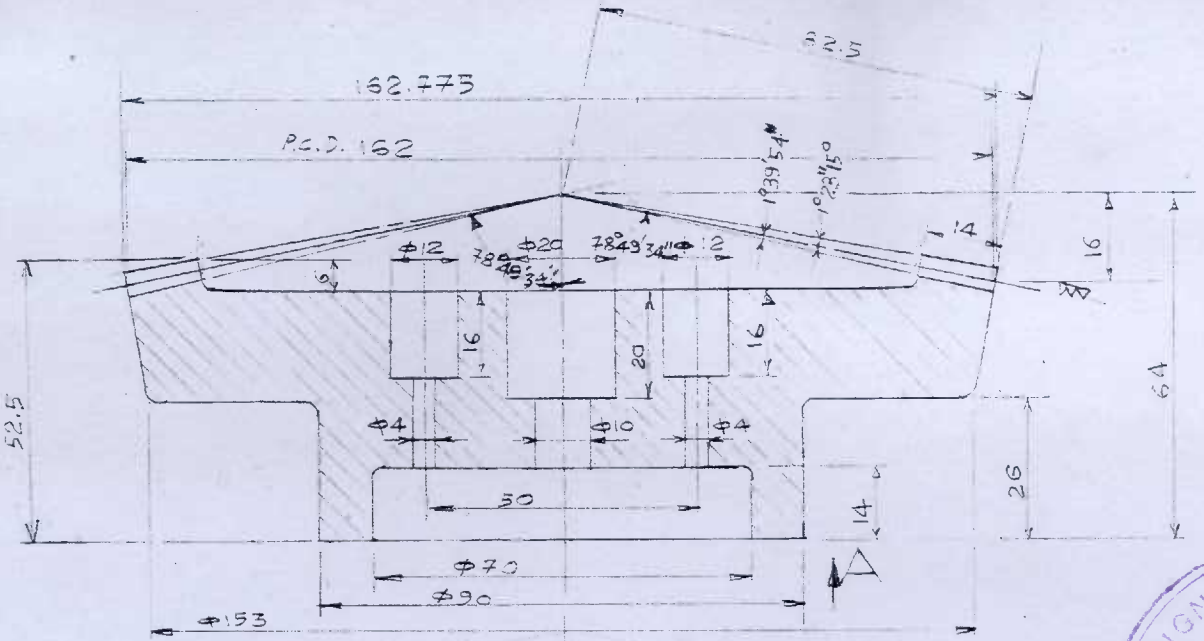

DATA

NO. OF TEETH	=	31
MODULE	=	2 (MAX.)
PRESSURE ANGLE	=	20°
MATERIAL	=	EN-24
TOOTH HARDENING	=	HRC-45-50
MATCHING DRG. NO.	=	04.43.13

DESIGN BUREAU C.F.F.P. ISSUED ON 15 JUL 2017 BHEL HARDWAR

GEAR TEETH SHOULD BE GRIND FINISH AFTER HARDENING

DRG. NO. TO BE PUNCHED ON THE ITEM.

VIEW-A

The information on this document is the property of BHARAT HEAVY ELECTRICALS LIMITED. It must not be used directly or indirectly in any way detrimental to the interest of the company

Ref. Drg. No. SAMPLE

Sign & Date

Inventory No. FF825113003 4

ALL SHARP CORNERS TO BE ROUNDED OFF.

MATERIAL- EN-24

REV.	DATE	ALTERED / CHECKED	REV.	DATE	ALTERED / CHECKED	REV.	DATE	ALTERED / CHECKED

BHARAT HEAVY ELECTRICALS LIMITED.
UNIT:CENTRAL FOUNDRY FORGE PLANT.
HARDWAR

DEPTT. DESIGN BUREAU	SCALE 1:1	WEIGHT(KGS.) 3.0	REF. to ASSY. DRG.	ITEM NO.

TITLE BEVEL GEAR
DIAL OF LONGITUDINAL DRIVE OF BECO-4 NUT LATHE MACHINE SHOP

	NAME	SIGN.	DATE
DRAWN	GUPTA M.K.		
CHECKED	GUPTA P.B.		
APPROVED	GUPTA P.B.		

Dimensions to be controlled Within Limits as Shown Machining Tolerence± 0.25 mm Unless Otherwise Shown. Non Machining Tolerence ±

DRAWING NO. 04.43.012 REV. 0

SHEET NO. 01 NO. OF SHEETS 01

SIZE-A.3

FIRST ANGLE PROJECTION (ALL DIMENSIONS ARE IN mm)

REV	DATE	ALTERED	REV	DATE	ALTERED
		CHECKED			CHECKED

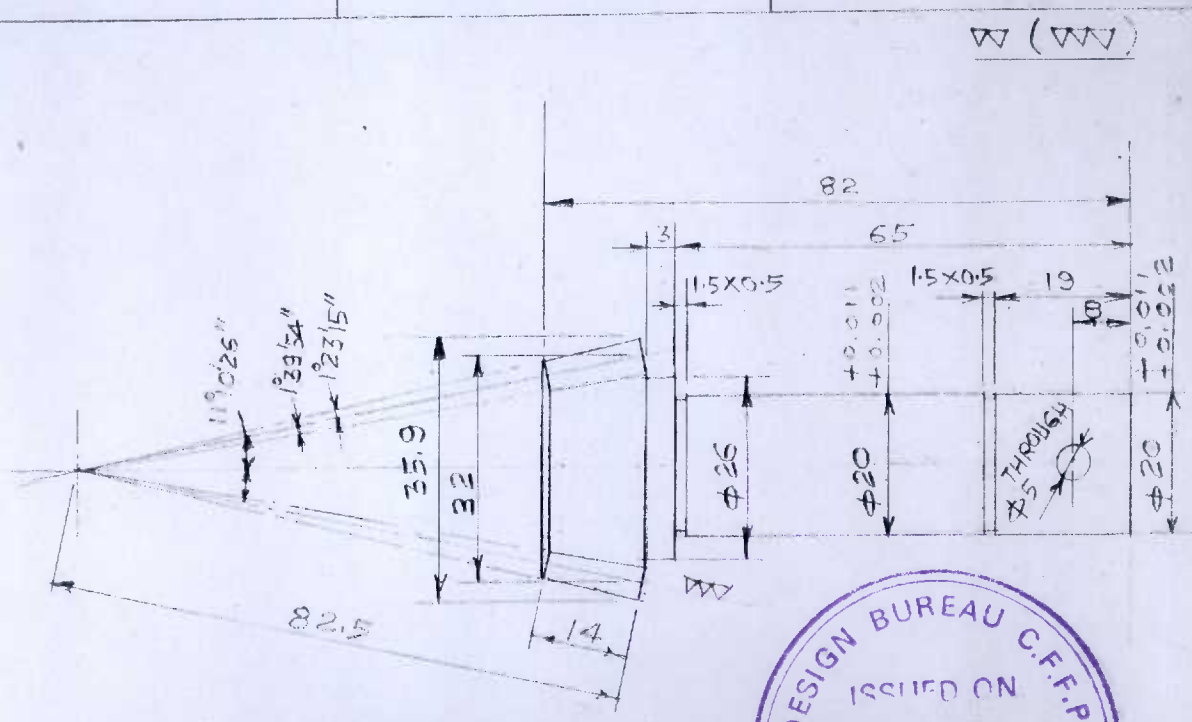

DESIGN BUREAU C.F.F.P.
ISSUED ON
15 JUL 2017
BHARAT

DATA

NO. OF TEETH = 16

MODULE = 2 (MAX.)

PRESSURE ANGLE = 20°

MATERIAL = EN-24

TOOTH HARDENING = HRC 45-50

MATCHING DRG. NO. = 04.43.012

GEAR TEETH SHOULD BE GRIND FINISH AFTER HARDENING

DRG. NO. TO BE PUNCHED ON THE ITEM.

The information on this document is the property of BHARAT HEAVY ELECTRICALS LIMITED. It must not be used directly or indirectly in anyway detrimental to the interest of the company.

Ref. Drg. No.

Sign. & Date

Inventory No. EF22BH3042

BHARAT HEAVY ELECTRICALS LTD.

UNIT: C.F.F.P., HARDWAR.

DEPT.	CODE	SCALE	WEIGHT (KG)	REF. TO ASSY. DRG.	ITEM NO.
DESIGN		1:1	0,26		

	NAME	SIGN.	DATE
DRAWN	GUPTAMK		24.07.2K
CHECKED	GUPTAPB		
APPROVED	GUPTAPB		8.8.00

BEVEL PINION
DIAL OF LONGITUDINAL DRIVE
OF BECO-14MT LATHE (MACHINE SHOP)

Dimensions to be Controlled Within Limits as Shown
Machining Tolerence + ·25 mm Unless Otherwise
Shown. Non Machining Tolerence ±

CARD CODE

DRAWING NO. 04.43.013

15 16 REV. 17 0

SHEET NO. 01 NO. OF SHEETS. 01

SIZE A4

T ANGLE PROJECTION (ALL DIMENSIONS ARE IN M.M.)

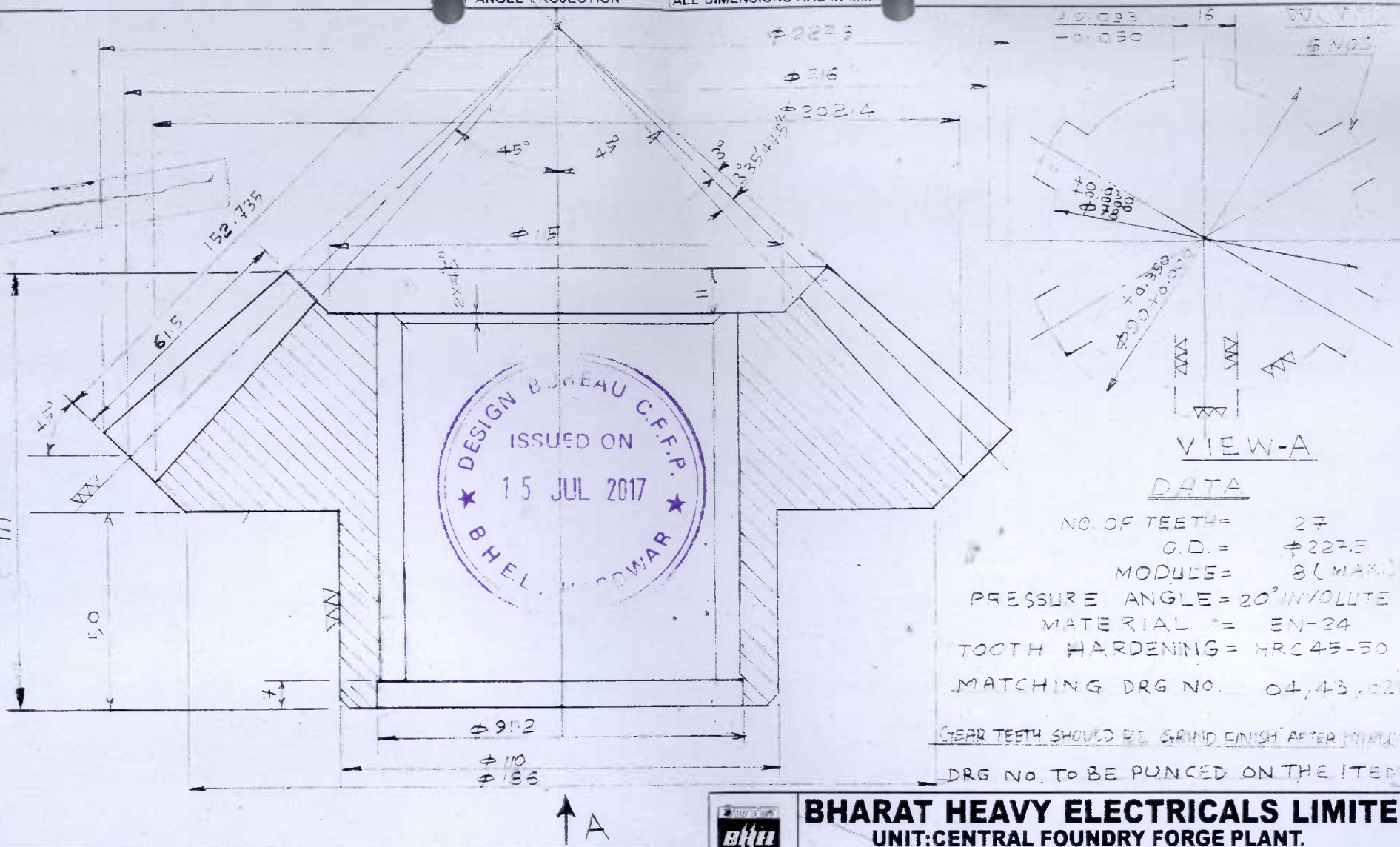

The information on this document is the property of BHARAT HEAVY ELECTRICALS LIMITED.
It must not be used directly or indirectly in any way detrimental to the interest of the company.

Ref. Drg. No. SAMPLE

Sign & Date

Inventory No. FF825113011 5

ALL SHARP CORNERS TO BE ROUNDED OFF.

MATERIAL- EN-24

REV.	DATE	ALTERED / CHECKED	REV.	DATE	ALTERED / CHECKED	REV.	DATE	ALTERED / CHECKED

BHARAT HEAVY ELECTRICALS LIMITED.
UNIT:CENTRAL FOUNDRY FORGE PLANT.
HARDWAR

DEPTT.	SCALE	WEIGHT(KGS.)	REF. to ASSY. DRG.	ITEM NO.
DESIGN BUREAU	1:1	9.00		

TITLE BEVEL GEAR (MATCHING)
14 M. CENTRE LATHE (BECO)
MACHINE SHOP

	NAME	SIGN.	DATE
DRAWN	GUPTA		
CHECKED	GUPTA		
APPROVED			

Dimensions to be controlled Within Limits as Shown Machining Tolerence± 0.25 mm Unless Otherwise Shown. Non Machining Tolerence ±

DRAWING NO. 04.43.016

REV. 0

SHEET NO. 01 NO. OF SHEETS 01

SIZE-A 3

The Information on this document is the property of BHARAT HEAVY ELECTRICALS LIMITED. It must not be used directly or indirectly in anyway deterimental to the interest of the company.

1ST ANGLE PROJECTION (ALL DIMENSIONS ARE IN MM)

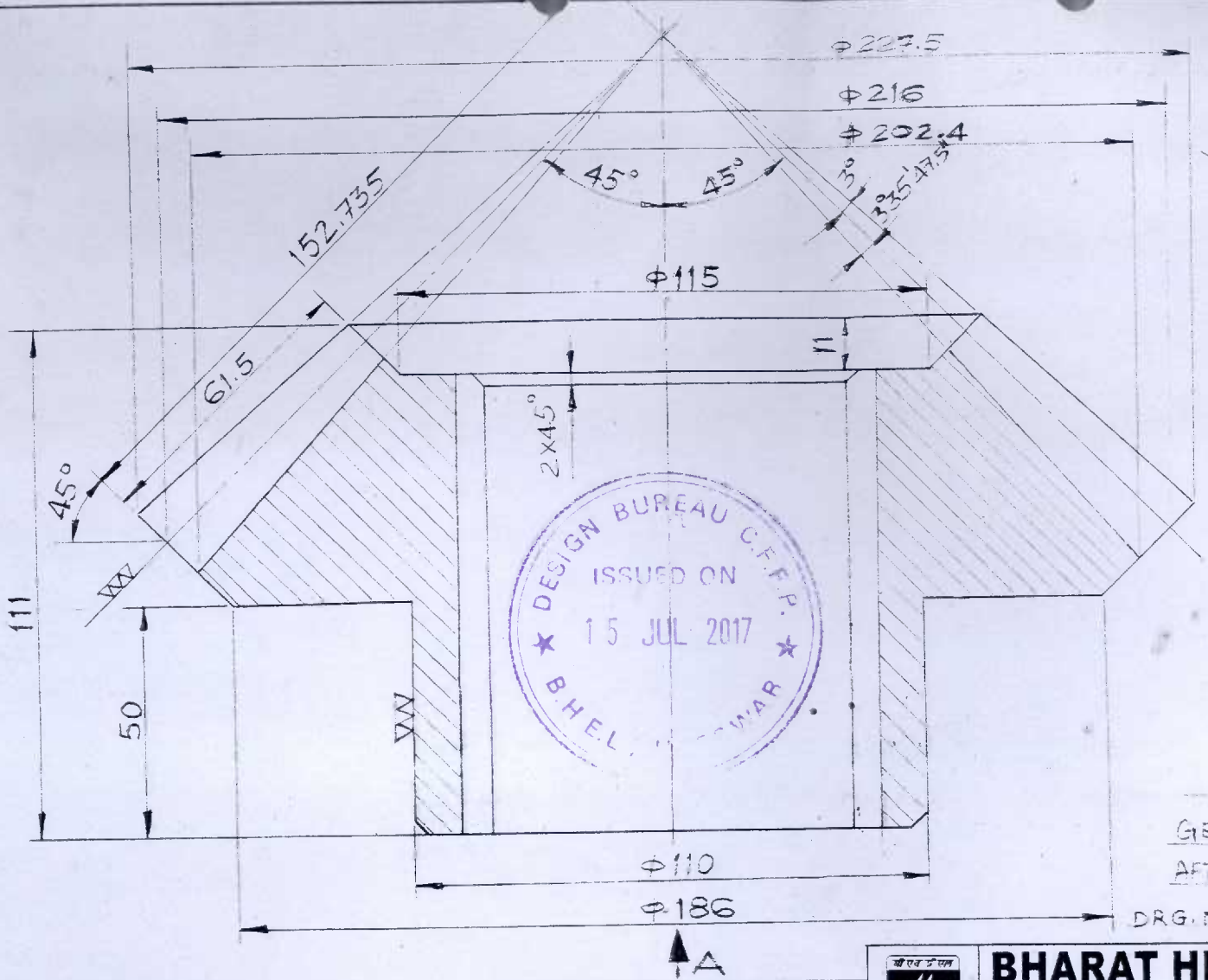

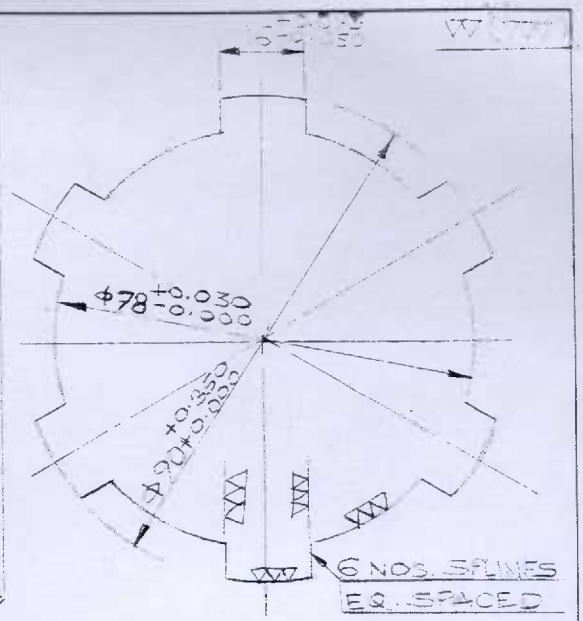

VIEW-A

NO. OF TEETH : 27
MODULE : 8 (MAX)
PRESSURE ANGLE : 20 INVOLUTE
TOOTH HARDENING : HRC 45-50
MATCHING DRG NO.: 04.43.016
GEAR TEETH SHOULD BE GRIND FINISH AFTER HARDENING.
DRG. NO TO BE PUNCHED ON THE ITEM.

DESIGN BUREAU C.F.F.P. ISSUED ON 15 JUL 2017 BHEL HARDWAR

MATERIAL: En 24

BHARAT HEAVY ELECTRICALS LTD.
UNIT : CENTRAL FOUNDRY FORGE PLANT
HARDWAR

REV.	DATE	ALTERED / CHECKED	REV.	DATE	ALTERED / CHECKED	REV.	DATE	ALTERED / CHECKED

DEPTT. DESIGN | SCALE 1:1 | WEIGHT (KGS.) 3.00 | REF. to ASSY. DRG. | ITEM NO.

TITLE BEVEL GEAR (TAIL STOCK)
14 M CENTRE LATHE (SECO) M/C SHOP

	NAME	SIGN.	DATE
DRAWN	S.BAL		14.10.17
CHECKED	K.LAL		
APPROVED	S.AGAR		

Dimensions to be Controlled Within Limits as Shown Machining Tolarance±0. 25 mm Unless Otherwise Shown. Non Machining Tolerence ±

DRAWING NO. 04.43.026 | REV. 0

SHEET NO. 1 | NO. OF SHEETS 1

Inventory No. FF8251130123

Ref. Drg. No.

Sign & Date

SIZE-A3

ANGLE PROJECTION (ALL DIMENSIONS ARE IN M.M.)

The information on this document is the property of BHARAT HEAVY ELECTRICALS LIMITED.
It must not be used directly or indirectly in any way deterimental to the interest of the company

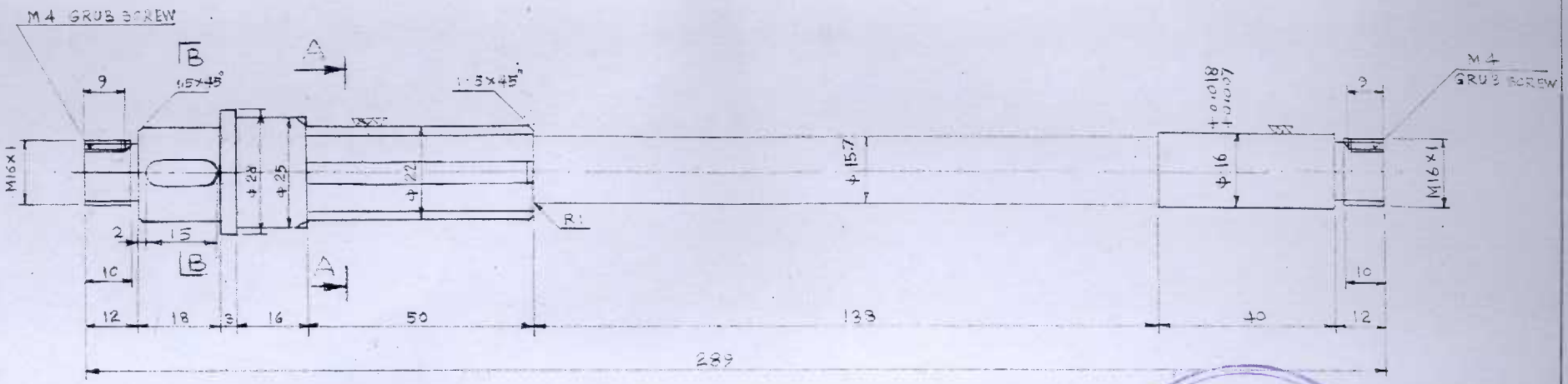

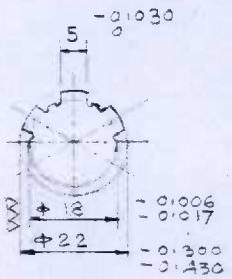

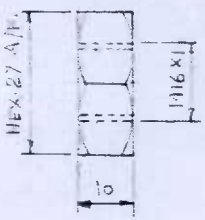

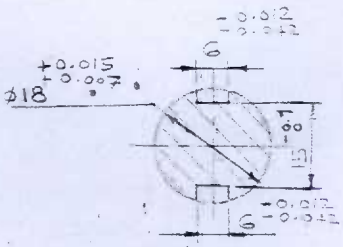

DESIGN BUREAU C.F.F.P.
ISSUED ON
15 JUL 2017
B.H.E.L., HARDWARE

MATCHING DRG.NO. 04,32,016

HARDNESS 40-45 HRC

NOTES:-
1. GEAR TEETH SHOULD BE GRIND AFTER HARDENING.
2. DRG. NO. TO BE PUNCHED ON THE ITEM

ALL SHARP CORNERS TO BE ROUNDED OFF.

MATERIAL- EN-24

REV.	DATE	ALTERED / CHECKED	REV.	DATE	ALTERED / CHECKED	REV.	DATE	ALTERED / CHECKED
						R1	23.11.17	

SPLINE LENGTH REDUCED
ADD SEC-BB

BHARAT HEAVY ELECTRICALS LIMITED.
UNIT:CENTRAL FOUNDRY FORGE PLANT.
HARDWAR

DEPTT.	SCALE	WEIGHT(KGS.)	REF. to ASSY. DRG.	ITEM NO.
DESIGN BUREAU	1:1	0.86		

TITLE — SPLINE SHAFT WITH NUT (CLUTCH) FOR FEED MOTOR GEAR BOX, - WD-160

	NAME	SIGN.	DATE
DRAWN	ASHOK KUMAR		
CHECKED	P.B.S		
APPROVED	P.B.S		

Dimensions to be controlled Within Limits as Shown Machining Tolerence± 0.25 mm Unless Otherwise Shown. Non Machining Tolerence ±

DRAWING NO. 04-32-015 REV. R1

SHEET NO. 1 NO. OF SHEETS 1

Ref. Drg. No. SAMPLE

Sign & Date

Inventory No. FF82515800030

SIZE-A.3

FIRST ANGLE PROJECTION (ALL DIMENSIONS ARE IN mm)

DRAWING NUMBER

REV.

The information on this document is the property of BHARAT HEAVY ELECTRICALS LIMITED. It must not be used directly or indirectly in anyway deterimental to the interest of the company.

DESIGN BUREAU C.F.F.P. ISSUED ON 15 JUL 2017 B.H.E.L., HARDWAR

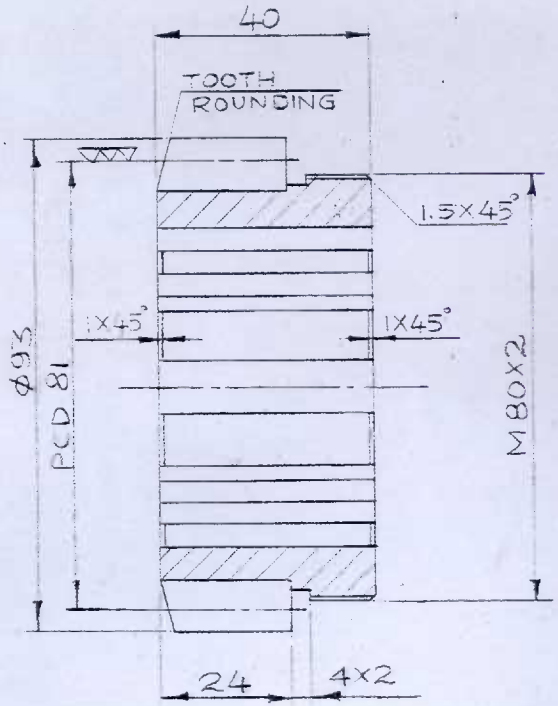

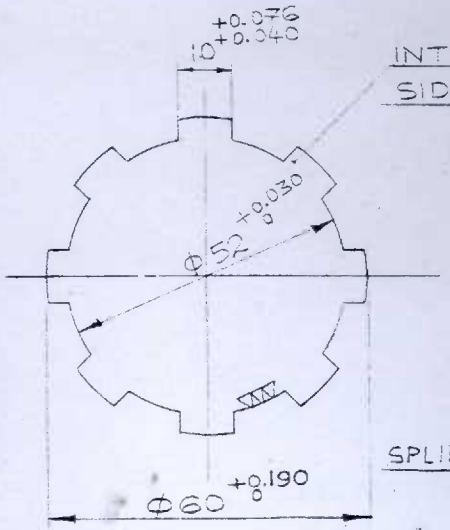

SPLINE MATCHING DRG. NO. 04,03,070

NOTE

THREADS M80×2 MATCHES PART DRG. No. 04,03,063

GEAR SHOULD BE MATCH WITH DRG.NO. 04,14,014

PART NO. 2671 , MATERIAL : EN36

NO. OF TEETH	18
OUTER DIA.	93
MODULE	4.5
PRESSURE ANGLE	20°(INVOLUTE)
TOOTH HARDENING	HRC 45-50
CORRECTION FACTOR	+0.25
ROOT DIA	73
CANTER DISTANCE	137.25

TEETH HARDENING AT 830°-840°C
TEETH SHOULD BE GRIND AFTER HARDENING & TEMPERING AT 180°-200°C

REV	DATE	ALTERED
		CHECKED

HEC RANCHI 210 Ref. Drg. No. 2501-01 SHEET No. 2

Sign: & Date

Inventory No. FF 825103050)

TYPE OF PRODUCT OR NAME OF CUSTOMER / PROJECT: MACHINE SHOP

BHARAT HEAVYELECTRICALS LTD.
UNIT: C.F.F.P., HARDWAR.

DEPT.	CODE	SCALE	WEIGHT (KG)	REF. TO ASSY. DRG.	ITEM NO.
DESIGN BUREAU		1:1			

SPUR GEAR (FIRST SHAFT) FOR HEAD STOCK 5 METRE LATHE LC100 (HEC RANCHI)

	NAME	SIGN.	DATE
DRAWN			
CHECKED			
APPROVED			

Dimensions to be Controlled Within Limits as Shown Machining Tolerence ± ·25 mm Unless Otherwise Shown, Non Machining Tolerence ±

CARD CODE

DRAWING NO. 04,03,067 REV.

SHEET NO. 1 NO. OF SHEETS.

OLD DRG NO. 04,04,005

SIZE A3

FIRST ANGLE PROJECTION (ALL DIMENSIONS ARE IN mm)

DRAWING NUMBER

REV.

The information on this document is the property of BHARAT HEAVY ELECTRICALS LIMITED. It must not be used directly or indirectly in anyway deterimental to the interest of the company.

HEC RANCHI

Ref. Drg. No. 210 2501-01 SHEET 2

Sign. & Date

FF82510630510

Inventory No.

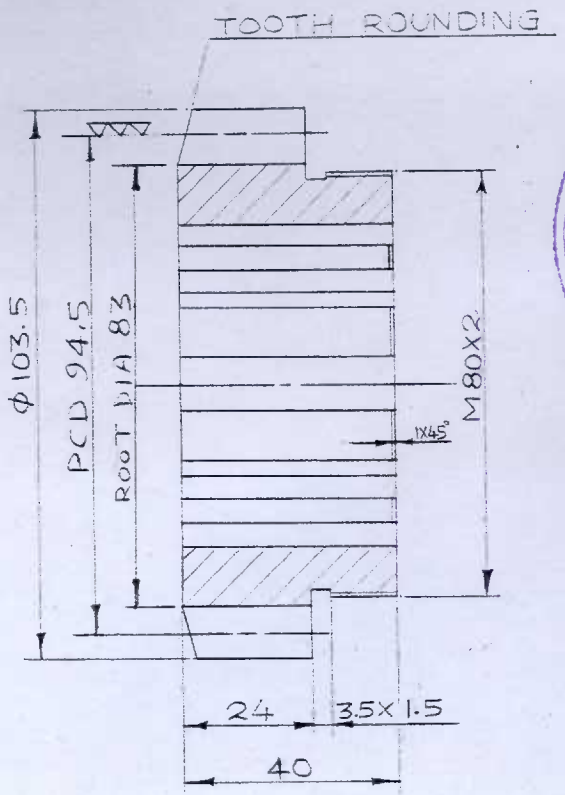

DESIGN BUREAU C.F.F.P. ISSUED ON 15 JUL 2017 B.H.E.L., HARDWAR

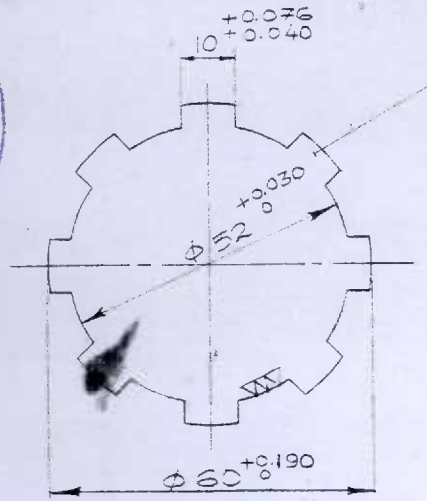

SPLINE MATCHING DRG. No 04.03-070

NOTE

THREADS M 80x2 MATCHES PART DRG. No. 04.03, 069

GEAR MATCHING DRG. No. 04,04,013

PART NO. 2672

MATERIAL EN36

NO. OF TEETH	21
OUTER DIA.	103.5
MODULE	4.5
PRESSURE ANGLE	20° (INVOLUTE)
TOOTH HARDENING	HRC 45-50
CORRECTION FACTOR	-0.06
CENTER DISTANCE	137.25

REV	DATE	ALTERED
		CHECKED

TEETH HARDENING AT 830° TO 840°C

TEETH SHOULD BE GRING AFTER HARDENING & TEMPERING AT 180°-200°C

TYPE OF PRODUCT OR NAME OF CUSTOMER / PROJECT: MACHINE SHOP

BHARAT HEAVYELECTRICALS LTD.

UNIT: C.F.F.P., HARDWAR.

DEPT.	CODE	SCALE	WEIGHT (KG)	REF. TO ASSY. DRG.	ITEM NO.
DESIGN BUREAU	364	1:1			

SPUR GEAR (1st SHAFT) FOR HEAD STOCK, 5 METRE LATHE LC100 (HEC RANCHI)

	NAME	SIGN.	DATE
DRAWN			22.3.1
CHECKED			4.5.1
APPROVED			

Dimensions to be Controlled Within Limits as Shown Machining Tolerence ± ·25 mm Unless Otherwise Shown, Non Machining Tolerence ±

CARD CODE

DRAWING NO. 04,03,068 REV. 0

SHEET NO. 1 NO. OF SHEETS 1

SIZE A3

OLD DRG. No. 06,06,006

FIRST ANGLE PROJECTION (ALL DIMENSIONS ARE IN mm)

The information on this document is the property of BHARAT HEAVY ELECTRICALS LIMITED. It must not be used directly or indirectly in anyway determental to the interest of the company.

DRAWING NUMBER

REV.

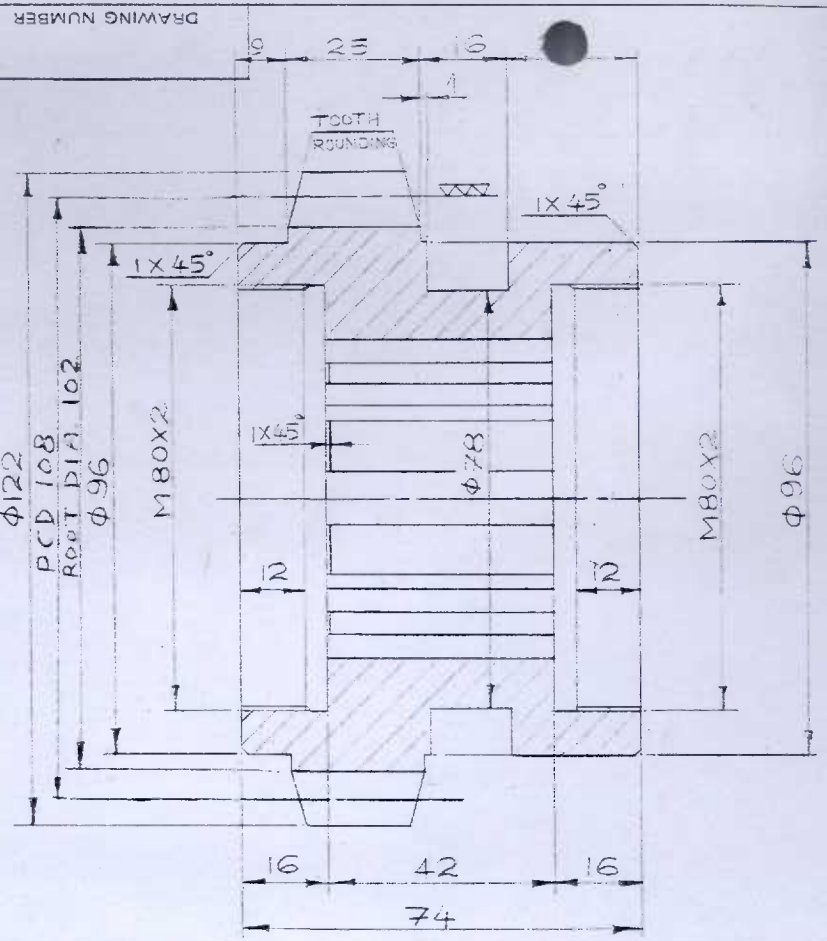

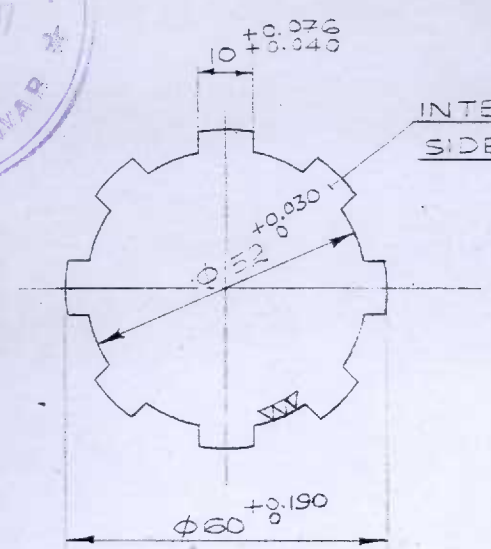

SPLINE MATCHING DRG. No. 04.03.070

NOTE

THREADS M 80X2 MATCHES PART DRG. No's 04.03.067 & 04.03.068

GEAR SHOULD BE MATCH WITH DRG. NO. 04.03.052

PART NO. 2673 MATERIAL: EN36

NO. OF TEETH	24
OUTER DIA.	122
MODULE	4.5
PRESSURE ANGLE	20° (INVOLUTE)
TOOTH HARDENING	HRC 45-50
CORRECTION FACTOR	+ 0.47
CENTER DISTANCE	137.25

TEETH HARDANING AT 830°-840°C

TEETH SHOULD BE GRIND AFTER HARDENING

TEMPERING AT 180°-200°C

REV	DATE	ALTERED
		CHECKED

DESIGN BUREAU C.F.F.P. ISSUED ON 15 JUL 2017 B.H.E.L., HARDWAR

TYPE OF PRODUCT OR NAME OF CUSTOMER / PROJECT: MACHINE SHOP

BHARAT HEAVY ELECTRICALS LTD.

UNIT: C.F.F.P., HARDWAR.

DEPT.	CODE	SCALE	WEIGHT (KG)	REF. TO ASSY. DRG.	ITEM NO.
DESIGN BUREAU	364	1:1	—		

SPUR GEAR (1st SHAFT) FOR HEAD STOCK, 5 METRE LATHE LC100 (HEC RANCHI)

	NAME	SIGN.	DATE
DRAWN			
CHECKED			
APPROVED			

Dimensions to be Controlled Within Limits as Shown Machining Tolerence ± ·25 mm Unless Otherwise Shown, Non Machining Tolerence ±

CARD CODE

DRAWING NO. 04.03.069 REV. 0

SHEET NO. NO. OF SHEETS.

SIZE A3

HEC RANCHI Ref. Drg. No. 210 2501-01

Sign. & Date

Inventory No. FFD5103052B

OLD DRG. No. 04.03.067

FIRST ANGLE PROJECTION (ALL DIMENSIONS ARE IN mm)

The information on this document is the property of BHARAT HEAVY ELECTRICALS LIMITED. It must not be used directly or indirectly in anyway detrimental to the interest of the company.

DRAWING NUMBER

REV.

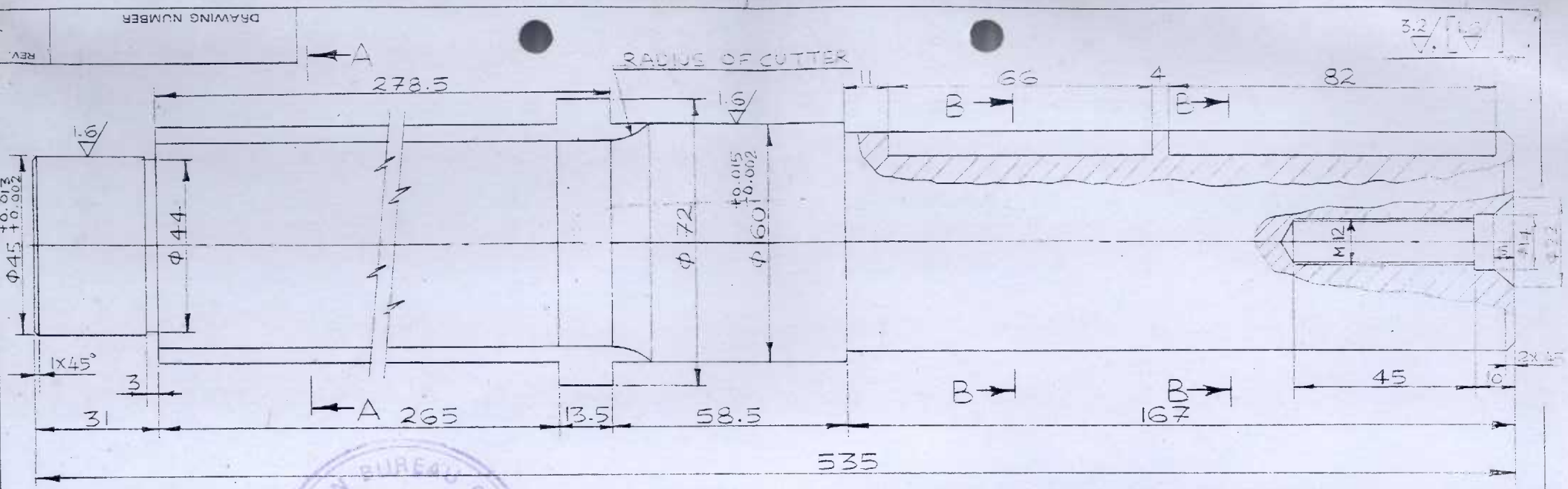

SPLINES HARDENING AT 830°-840°C
SPLINES SHOULD BE GRIND AFTER HARDENING
TEMPERING AT 180°-200°C

MATERIAL - EN-24

SURFACE HARDNESS: HRC 45-50.

BLUNT SHARP EDGES.

PART NO. 2536

DESIGN BUREAU C.F.F.P. * B.H.E.L. HARDWAR *
ISSUED ON 15 JUL 2017

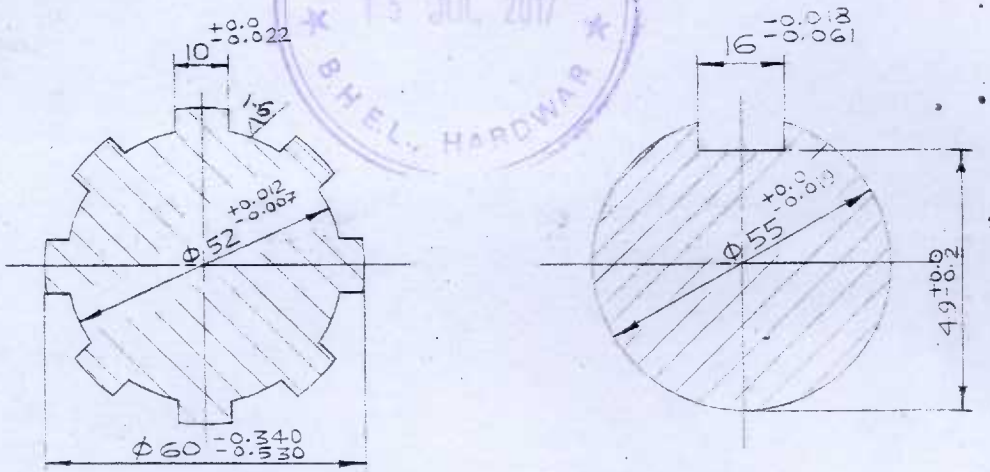

TYPE OF PRODUCT OR NAME OF CUSTOMER / PROJECT	MACHINE SHOP

BHARAT HEAVY ELECTRICALS LTD.
UNIT: C.F.F.P., HARDWAR.

DEPT.	CODE	SCALE	WEIGHT (KG)	REF. TO ASSY. DRG.	ITEM NO.
		1:1			

SPLINE SHAFT (1ST. SHAFT)
FOR HEAD STOCK, 5 M CENTRE LATHE

	NAME	SIGN.	DATE
DRAWN	[illegible]	[illegible]	21.10.[illegible]
CHECKED	[illegible]	[illegible]	31.10.[illegible]
APPROVED			

SPLINE MATCHING DRG NO. 04.03.67
04.03.68
04.03.69

REV	DATE	ALTERED
		CHECKED

Dimensions to be Controlled Within Limits as Shown
Machining Tolerence + ·25 mm Unless Otherwise Shown, Non Machining Tolerance ±

CARD CODE

DRAWING NO. 04.03.070 REV. 0

SHEET NO. 1 NO. OF SHEETS. 1

SIZE A3

Ref. Drg. No. 210 / 2501-01 2 OF 2

Sign. & Date

Inventory No. F-82510/3 0498

OLD DRG No. 04.03.01

FIRST ANGLE PROJECTION (ALL DIMENSIONS ARE IN mm)

REV.	DRAWING NUMBER

The information on this document is the property of BHARAT HEAVY ELECTRICALS LIMITED. It must not be used directly or indirectly in anyway detrimental to the interest of the company.

NO.	DESCRIPTION	DATA
1	NO. OF TEETH	36
2	MODULE	4.5
3	P. ANGLE	25°
4	TOOTH DEPTH	10
5	TOOTH HARDENING HRC.	45-50
6	MATERIAL	EN-36
7	CERRECTION FACTOR	-0.112
8	SPLINE MATCHING DRG NO	04.03,003
9	GEAR MATCHING DRG. NO.	04,03,069
10	CENTER DISTANCE	137.25

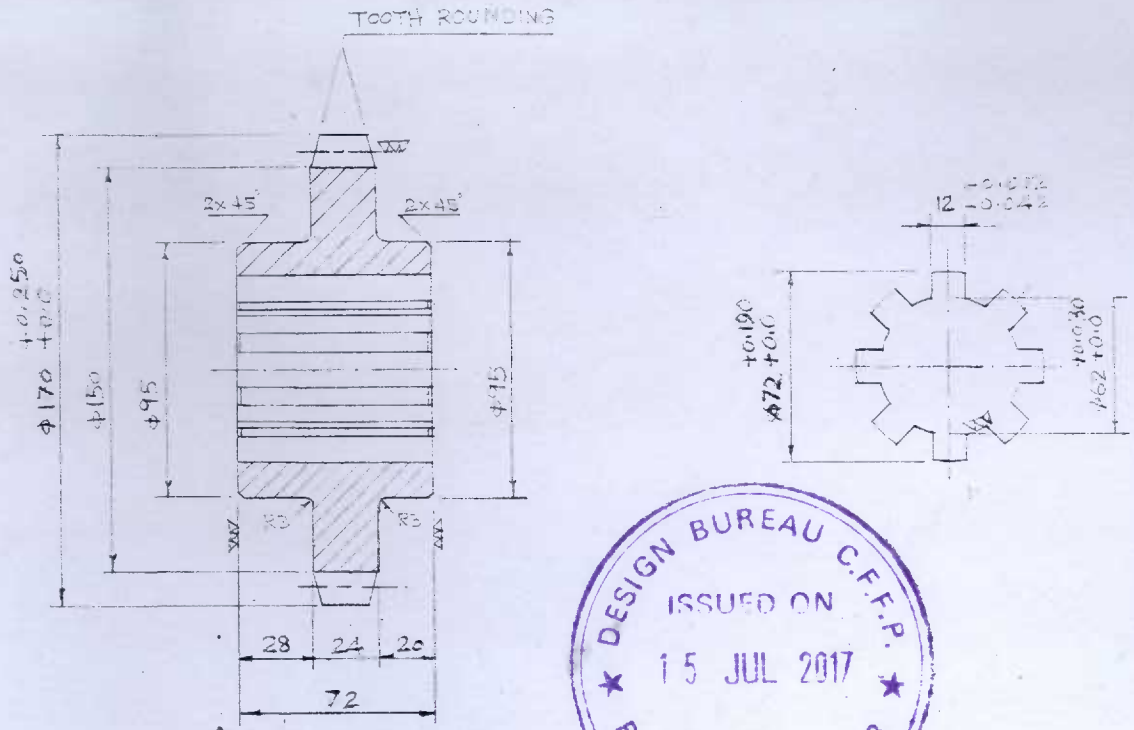

DESIGN BUREAU C.F.F.P.
ISSUED ON
15 JUL 2017
BHEL, HARDWAR

ALL TEETH OF GEAR & SPLINES HARDENING AT 830°-840°C
TEMPERING AT 180°-200°C

ALL TEETH OF GEAR & SPLINES SHOULD BE OF SUPER FINISHED GRIND AFTER HARDENING.

REV	DATE	ALTERED
R1	2-2-5	CHECKED

MTL. ALTERED

TYPE OF PRODUCT
OR
NAME OF CUSTOMER / PROJECT

BHARAT HEAVY ELECTRICALS LTD.
UNIT: C.F.F.P., HARDWAR.

DEPT.	CODE	SCALE 1:2	WEIGHT (KG)	REF. TO ASSY. DRG.	ITEM NO.

SPUR GEAR
5,5 M. LATHE

	NAME	SIGN.	DATE
DRAWN		15-2-16	
CHECKED			
APPROVED			

Dimensions to be Controlled Within Limits as Shown Machining Tolerance ± ·25 mm Unless Otherwise Shown, Non Machining Tolerance ±

CARD CODE

DRAWING NO. 04-03-052 15 16 REV. 1

SHEET NO. NO. OF SHEETS.

SIZE A3

Ref. Drg. No.

Sign. & Date

Inventory No. FF925101035

FIRST ANGLE PROJECTION | (ALL DIMENSIONS ARE IN mm) | FORM: DG-38(B)

DRAWING NO. 04-05-099

COPYRIGHT AND CONFIDENTIAL
THE INFORMATION ON THIS DOCUMENT IS THE PROPERTY OF BHARAT HEAVY ELECTRICALS LIMITED . IT MUST NOT BE USED DIRECTLY OR INDIRECTLY IN ANY WAY DETRIMENTAL TO THE INTEREST OF THE COMPANY.

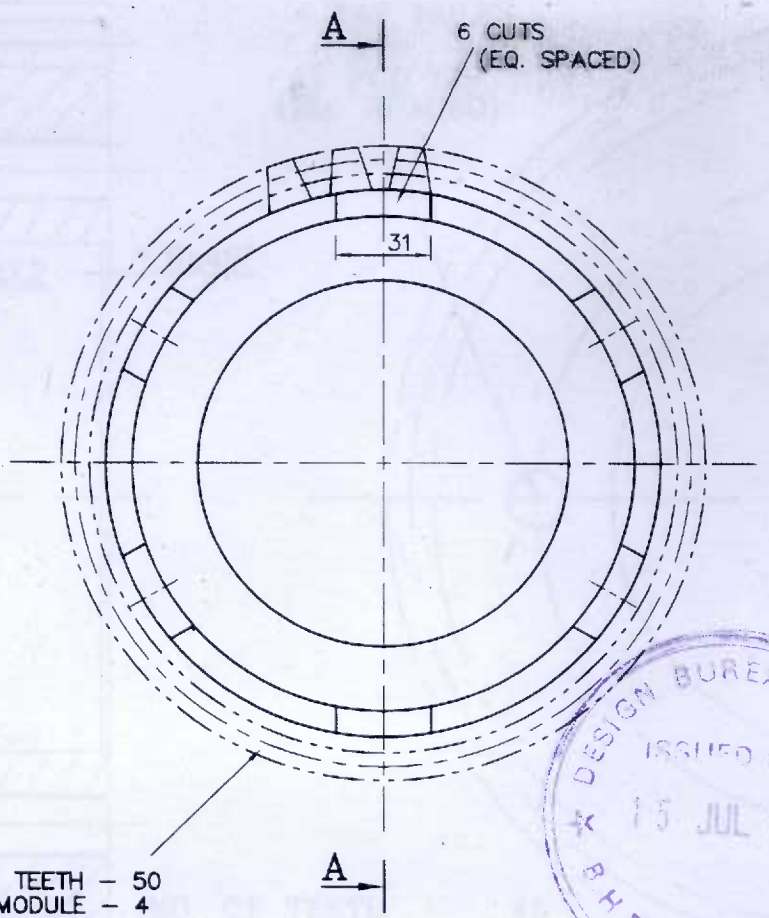

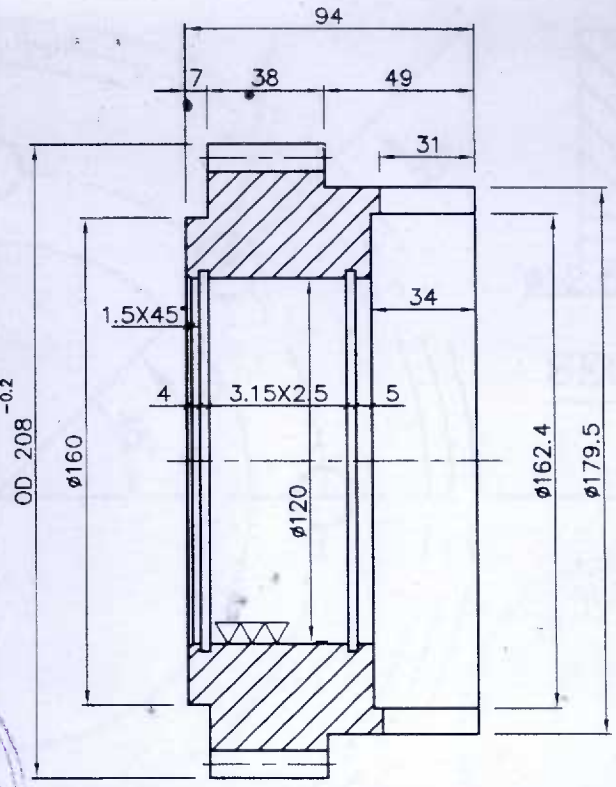

NO.OF TEETH – 50
MODULE – 4
PRESSURE ANGLE – 20°
TOOTH HARDENING–HRC 45 – 50

GEAR TEETH SHOULD BE GRIND FINISH AFTER HARDENING.

DRG. NO. TO BE PUNCHED ON THE ITEM.

SECTION–AA

DESIGN BUREAU C.F.F.P. ISSUED ON 15 JUL 2017 BHEL, HARDWAR

MATERIAL: EN 24					
REV.	DATE	ALTERED / CHECKED	REV.	DATE	ALTERED / CHECKED

BHARAT HEAVY ELECTRICALS LTD.
UNIT: CENTRAL FOUNDRY FORGE PLANT
HARDWAR

	NAME	SIGN	DATE	NO.OF VAR.
DRN	PRAVEEN		15.03.17	
CHD	ANAMIKA			
APD	VIDYA			73, 74

DEPT. M&S		SCALE N.T.S.	WEIGHT(Kg.)	REF. TO ASSY. DRG.	ITEM NO. / NO.OF ITEMS
CODE					75, 77

TITLE: SPUR GEAR WITH CLUTCH HOUSING OF CLUTCH UNIT FOR 1540 B M/C SHOP

DRAWING NO. 04-05-099

SHEET NO. 1 | NO.OF SHEETS 1

SIZE A3

REF. DRG NO. | SIGN & DATE | INVENTORY NO. 6282501175

FIRST ANGLE PROJECTION

(ALL DIMENSIONS ARE IN mm)

FORM: DG-38(B)

DRAWING NO. 04,05,101

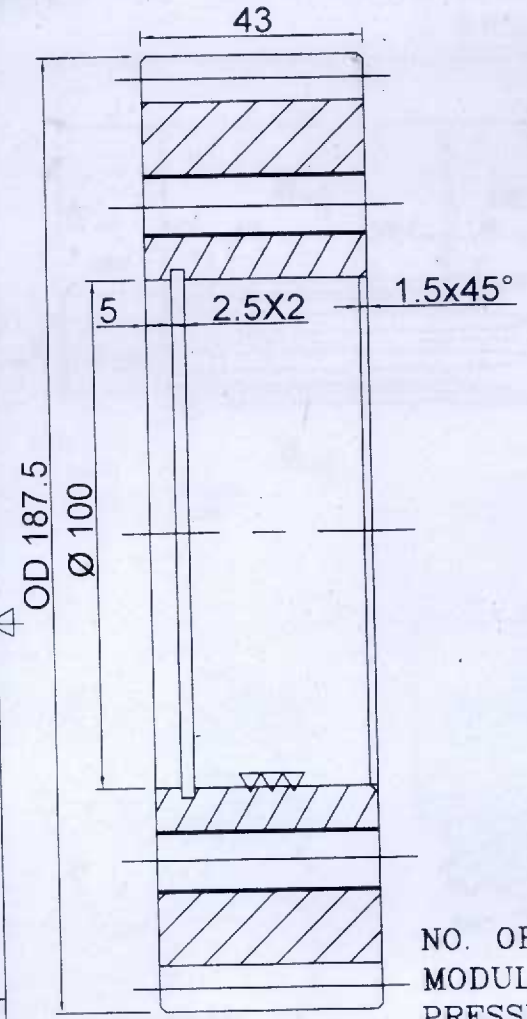

SEC AA

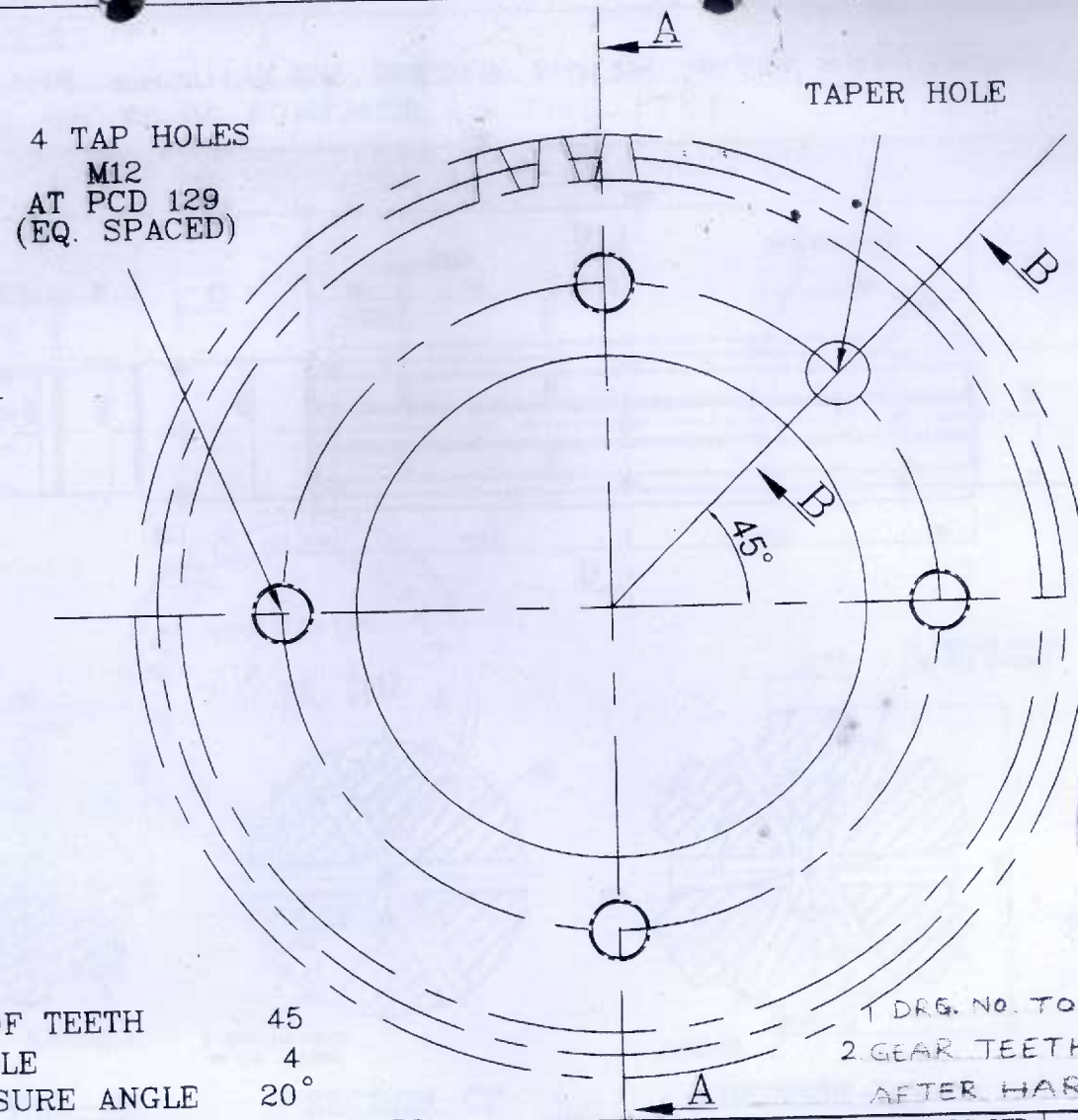

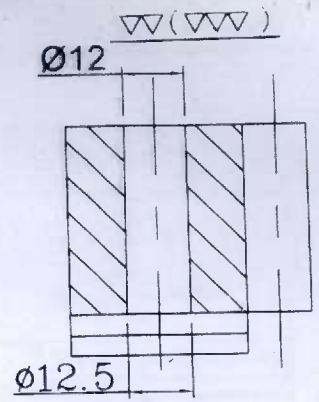

SEC BB

NO. OF TEETH 45
MODULE 4
PRESSURE ANGLE 20°
TOOTH HARDENING–HRC 45–50

1 DRG. NO. TO BE PUNCH ON THE ITEM.
2. GEAR TEETH SHOULD BE GRIND AFTER HARDENING.

DESIGN BUREAU C.F.F.P. ★ BHEL, HARDWAR ★ ISSUED ON 15 JUL 2017

COPYRIGHT AND CONFIDENTIAL
THE INFORMATION ON THIS DOCUMENT IS THE PROPERTY OF BHARAT HEAVY ELECTRICALS LIMITED . IT MUST NOT BE USED DIRECTLY OR INDIRECTLY IN ANY WAY DETRIMENTAL TO THE INTEREST OF THE COMPANY.

REF. DRG NO.

SIGN & DATE

INVENTORY NO. FF 8 2 9 1 0 1 1 1 9 1

MATERIAL: EN24

REV.	DATE	ALTERED / CHECKED	REV.	DATE	ALTERED / CHECKED

BHARAT HEAVY ELECTRICALS LTD.
UNIT: CENTRAL FOUNDRY FORGE PLANT
HARDWAR

	NAME	SIGN	DATE	NO.OF VAR.
DRN	PRAVEEN		17.3.17	
CHD	ANAMIKA			
APD	VIDYA			

DEPT. M&S | SCALE 1:1 | WEIGHT(Kg.) | REF. TO ASSY. DRG. | ITEM NO. | NO.OF ITEMS

CODE

TITLE SPUR GEAR OF CLUTCH UNIT FOR 1540 B.M/C SHOP

DRAWING NO. 04,05,101 | 0

SHEET NO. 1 | NO.OF SHEETS 1

SIZE A3

FIRST ANGLE PROJECTION | (ALL DIMENSIONS ARE IN mm) | FORM: DG-38(B)

DRAWING NO. 04-05-108

NOTES:
1. SPLINE SHOULD BE GRIND FINISH AFTER HARDENING.
2. DRG. NO TO BE PUNCHED ON THE ITEM

▽,▽▽,(▽▽▽)

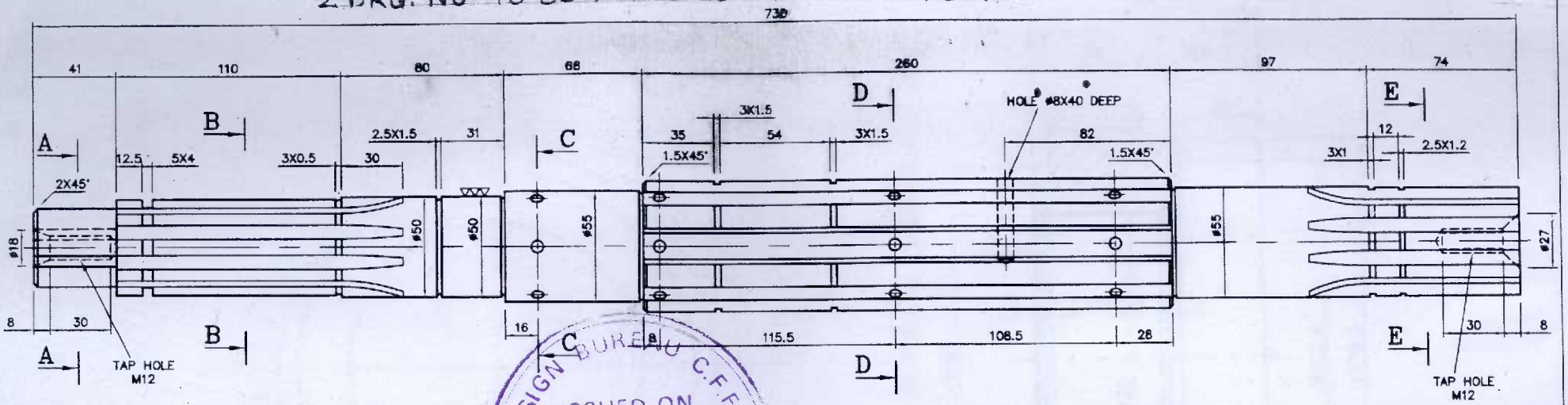

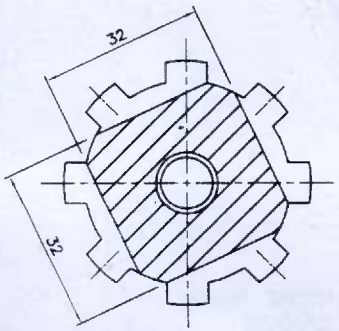

SECTION–AA

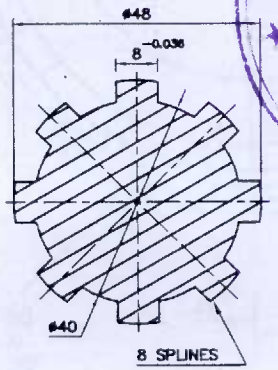

SECTION–BB

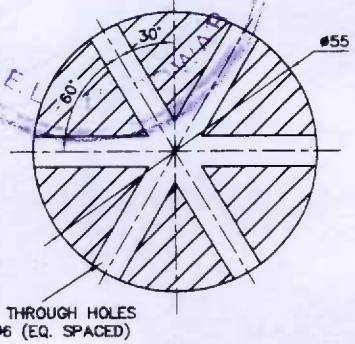

SECTION–CC

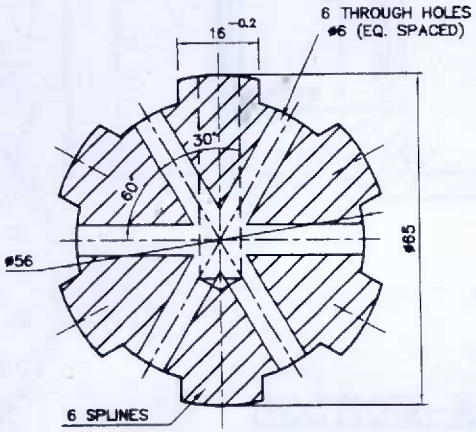

SECTION–DD

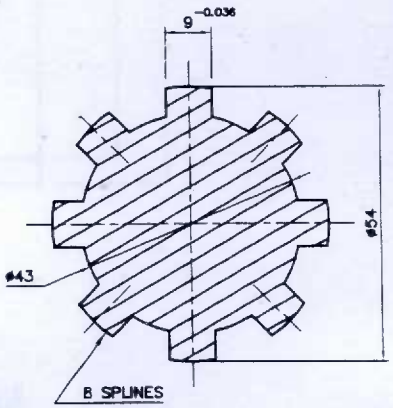

SECTION–EE

SPLINE HARDNESS – HRC 45–50
ALL SHARP CORNERS TO BE ROUNDED OFF.

MATERIAL: EN 24

REV.	DATE	ALTERED / CHECKED	REV.	DATE	ALTERED / CHECKED

BHARAT HEAVY ELECTRICALS LTD.
UNIT: CENTRAL FOUNDRY FORGE PLANT
HARDWAR

	NAME	SIGN	DATE	NO.OF VAR.
DRN	PRAVEEN		28.03.17	
CHD	ANAMIKA			
APD	VIDYA			

DEPT. M&S | CODE | SCALE N.T.S. | WEIGHT(Kg.) | REF. TO ASSY. DRG. | ITEM NO. | NO.OF ITEMS

TITLE: SPLINE SHAFT OF CLUTCH UNIT FOR 1540 B M/C SHOP

DRAWING NO. 04-05-108 | 0

SHEET NO. 1 | NO.OF SHEETS 1

SIZE A3

REF. DRG NO. | SIGN & DATE | INVENTORY NO. FF22SH011264

COPYRIGHT AND CONFIDENTIAL
THE INFORMATION ON THIS DOCUMENT IS THE PROPERTY OF BHARAT HEAVY ELECTRICALS LIMITED . IT MUST NOT BE USED DIRECTLY OR INDIRECTLY IN ANY WAY DETRIMENTAL TO THE INTEREST OF THE COMPANY

DESIGN BUREAU C.F.F.P. BHEL HALA
ISSUED ON 15 JUL 2017