List of Tendered Items

Item No	Description	Quantity	UoM
1	RIFLE TUBE OD 44.5mm WT 7.21mm LENGTH 11400mm SA210GRA1	2,964.00	Meter
2	RIFLE TUBE OD 44.5mm WT 7.21mm LENGTH 11500mm SA210GRA1	621.00	Meter
3	RIFLE TUBE OD 63.5mm WT 12mm LENGTH 12150mm SA210GRC	874.80	Meter
4	RIFLE TUBE OD 51mm WT 5.6mm LENGTH 12150mm SA210GRC	1,458.00	Meter
5	RIFLE TUBE OD 51mm WT 6mm LENGTH 12150mm SA210GRC	303.75	Meter

Annexure C

VENDOR DETAILS

SL NO	DESCRIPTION	To be filled by bidder
1	VENDOR NAME	
2	QUOTATION REFERENCE	
3	QUOTATION DATE	
4	TELE, MOBILE NO	
5	FIRM MAIL ID	
6	CONTACT PERSON	
7	OFFICE ADDRESS	
8	ORDER TO BE PLACED ON	
9	COUNTRY OF ORIGIN	
10	PORT OF LOADING	
11	PORT OF DISCHARGE	

Vendor Seal & Sign

LIST OF DOCS TO SUBMIT

Please submit the following Tender Documents, accepted and signed by authorised person of the Company.

Sl No.	Document details
1	TDC 105 Rev 04
2	PQR- Ref: MM: Pur: Rif Tubes: Rev 01
3	Drawing 3-07-510-87180
4	Drawing 3-06-651-03853
5	SIPPP21_07 Colour Codes
6	Supplier facility report format.
7	Annexure to PQR- BHEL approved Mother hollow source
8	Annexure-C-Vendor-details
9	Pre-Signed Integrity Pact.

Revision record:

Rev 01: Dated 20/12/03: Totally revised. Major changes include Gr.A1,UT before rifling and equipment details removed. Annexure introduced in Cl.11.

Rev 02: Dated 25/06/04: Cl.6.0 revised

Rev 03: Dated 29/12/07:Cl 1.0-A1 included. Cl.2.0,4.0,6.0,8.0 modified. & Cl.11.0 modified for clarity

Rev 04: Dated 05/08/2019: Cl 1 & 2 modified, Cl. 3 added to include billet/ bloom requirements, Subsequent clauses renumbered; Cl 6, 8 & 9 modified, Cl. 10 preservation requirements modified; Cl 11 modified, Cl 12 modified to bring inline with the latest IBR form and certification requirements; Cl 12.3 (g), (h) & Cl 13 added.

---

1. MATERIALS

Specification: ASME (Latest as on the date of *Enquiry*/PO, *whichever is earlier*):

Material	: SA 210 Gr. A1 & Gr. C
Additional Requirement	: As listed below (Supplementary to *above material* specifications)
Size and Quantity	: As per Purchase order

2. CHEMICAL COMPOSITION AND PROCESS OF MANUFACTURE *OF TUBES*:

Tubes shall be Cold Drawn. Ladle and Product analysis *is* required.
Maximum Carbon: 0.25% for SA210 GrA1 and 0.30 % for SA210 GrC.

3. *BILLET/BLOOM REQUIREMENTS:*

(a) The billets/blooms shall be fully killed and vacuum degassed.

Ladle analysis is required for all steels

(b) The billet/bloom shall conform to the chemical and process requirements of respective tube specifications. The billet/bloom shall be sourced from IBR well known steel makers or with inspection and certification by IBR authorized Inspecting Authority in case the mill is not approved by IBR.

Mill test certificate shall be submitted to BHEL.

4. DIMENSIONAL TOLERANCES

Dimensional tolerance shall be as per SA 450. The number of ribs, its configuration, width and lead angle shall be as per the drawing.

5. HEAT TREATMENT - Normalized condition

6. MECHANICAL TESTS

As per specification. Quantum of test:– *For each nominal size per heat per heat treatment batch* - Minimum 2 tubes for first 100 tubes and 1 per 100 or part thereof for tubes over 100 numbers, as per IBR. Full cross section of the tube shall be taken for tensile test and the area shall be computed by dividing the specific weight in kg/m by 7840.

7. NON DESTRUCTIVE TEST

Ultrasonic testing as per ASTM E213 on all tubes after rifling.
Calibration: Longitudinal notch 50mm long in OD. ID longitudinal notch shall be in between ribs and on top of rib. Depth of notch shall be 5% max. of specified wall thickness or 0.3 mm whichever is maximum. Scanning shall be in clockwise & anti clockwise direction. The smallest reflection echo obtained from the notches shall be calibrated not less than 50% of full screen height.

8. **FINISH AND REPAIR**

Inside and outside *surfaces shall be* free from scales and defects like laps, seams, folds, cracks, pitting etc. Repairs by welding is prohibited. Surface defects can be removed mechanically, *ensuring smooth curved surface and* maintaining specified minimum thickness *without affecting the workmanlike finish.*

9. **MARKING:** (in English only)

a) **Details to be identified:** *Tubes shall be marked repeatedly & continuously along its entire length with the following details as indicated below:*
(1) PO Number, (2) Maker's emblem/code, (3) Specification & grade, (4) Heat number, (5) Size (OD x Thickness x Length, in mm), (6) No. of tubes, (7) Inspector's seal

Sl Nos: 1 to 5 to be paint stenciled, *repeatedly through the entire length* of each tube. Also Sl.No:1 to 7 to be stamped on Metal/Plastic tag attached to bundle. In addition, each tube shall be paint stenciled as rifled/ribbed.

b) **Colour Coding:** *Continuous longitudinal colour coding shall be done on the entire length of all tubes, without masking stenciling.* Colour coding scheme as per Procedure SIP: PP: 21 (latest).

10. **PRESERVATION:**

All tubes, shall have Rust Preventive Fluid (RPF) coating on the external surface as follows: *The Tubes shall be coated with suitable RPF with minimum DFT of 50 microns. RPF coated steel surfaces shall be capable of withstanding salt spray corrosion test for minimum 1000 hours. The RPF coating should be sea worthy, ensuring freedom from corrosion when transported through sea voyage. The RPF coating shall get dried and shall be a transparent coating, so that it is possible to see the tube surface clearly as well as read any stenciled matter on tube surface. The inside surface of the tube shall be protected with volatile corrosive rust inhibitor. Rust preventive coating shall withstand at least one year storage at open yard from receipt of materials. The supplier shall stand guarantee for this. Tube* ends shall be closed with *push type* plastic end caps/plugs secured *tightly to avoid entry of water during transportation and* storage.

11. **PACKING:**
Bundles to be ≤ 4 tons of equal no. of tubes, fastened with galvanized strap (1x25mm.min.) at both ends & at 1m interval in between. *Covering of tube bundles is not permitted.*

12. **INSPECTION AND CERTIFICATION:**

12.1 *Products* shall be inspected at works and the *applicable IBR Form* must be Countersigned by the Inspecting Authority as indicated below:
Imported Items: Inspecting Authority approved by IBR for the Country of origin *(Vendor shall obtain BHEL's concurrence for inspecting authority).*
Indigenously Supply: Director of Boilers/Chief Inspector of Boilers/Inspecting Authority approved by IBR, for the respective state.

12.2 *Certification in IBR Form III-B for finished tubes from "IBR-Well Known Tube Maker" or "Inspecting Authority", as applicable, shall be submitted to BHEL. Also, certification in IBR Form IV for the raw material signed by "IBR-Well Known Steel Maker" or "Inspecting Authority", as applicable, shall be submitted to BHEL. Refer to BHEL Engineering Drawing: 4-03-000-00061 (Latest Rev) for MAWP values for various material grades & sizes at various temperatures.*

12.3 **Additionally, Manufacturer's Test certificate(MTC)** (ORIGINAL in ENGLISH) with following details shall be submitted to BHEL:

a) Purchase Order No. (BHEL), TDC No *and its Rev No*, Test certificate No., Size and Quantity-Melt wise.
b) Specification and Grade with year of code, Heat Number, Steel & Tube making process, chemistry including incidental elements-Ladle and product Analysis.
c) Heat Treatment details *with actual temperature and soaking time*
d) Mechanical test results
e) Detailed NDE report *with reference norms, acceptance standards and test results.*
f) Grain size, as applicable.
g) Certification for minimum DFT of rust preventive coating
h) Mill test certificate of the raw material (billets/blooms) as per Cl. 3.

In the MTC a clause for Certificate of Compliance (as per SA 1016) shall be added stating that: All materials/components supplied to Purchase Order meet all requirements contained in the PO, this Technical delivery conditions and applicable ASME specifications.

13. These tubes are meant for use in Boilers. These tubes shall be capable of undergoing forming, bending and welding operations necessary for the application without developing defects.

05/08/2019	05/08/2019	5/8/19	05/08/19	05/09/2019
Abdur Rahman Sultan	M. Nadanakumar	S. Anand Kumar	R. Dharmar	JVV Aruna Kumar
Sr. Engr/QA	AGM/MM	SDGM/PE/FB	AGM/QC	SDGM/QA
Prepared By	**Reviewed by**			**Approved By**

DRAWING NO: 3-06-651-03853

DIMENSIONAL SPECIFICATION FOR MULTI-RIFLED TUBING

FOR TOLERANCES OF UNTOLERANCED DIMENSIONS DURING MANUFACTURE REFER PLANT STD.NO TP 023 0299

MATERIAL SPECIFICATION : SA 210 GrC

↓ PARAMETERS / TUBE SIZE→	TUBE ø51x5.6	TUBE ø51x6.0	TUBE ø51x7.1	TUBE ø63.5x7.1	TUBE ø63.5x11	TUBE ø63.5x12
A TUBE OUTSIDE DIAMETER	51.00 ±0.25	51.00 ±0.25	51.00 ±0.25	63.50 ±0.30	63.50 ±0.30	63.50 ±0.30
B MAJOR INSIDE DIAMETER	38.57 ±0.25	37.68 ±0.25	33.24 ±0.25	47.74 ±0.30	39.08 ±0.30	36.86 ±0.30
C MINIMUM INSIDE DIAMETER	35.57	34.71	32.30	44.53	36.03	33.85
D MINIMUM WALL THICKNESS	5.6	6.0	7.1	7.1	11	12
E NUMBER OF RIBS	8	8	8	8	8	8
F RIP WIDTH AT TOP (NOMINAL) (CIRCUMFERENTIAL)	4.78	4.78	4.78	4.78	4.78	4.78
H RIB HEIGHT	1.07 ±0.30	1.06 ±0.30	1.04 ±0.30	1.15 ±0.30	1.07 ±0.30	1.05 ±0.30
K RIB SIDE ANGLE	55° ±15°	55° ±15°	55° ±15°	55° ±15°	55° ±15°	55° ±15°
L RIB RADIUS	0.13–1.27	0.13–1.27	0.13–1.27	0.13–1.27	0.13–1.27	0.13–1.27
M RIB PITCH	26.23 ±3.18	25.62 ±3.18	23.97 ±3.18	32.46 ±3.18	26.57 ±3.18	25.06 ±3.18
N LEAD LENGTH (360°)	209.8 ±25.4	205.0 ±25.4	191.8 ±25.4	259.7 ±25.4	212.6 ±25.4	200.5 ±25.4
P LEAD ANGLE (NOMINAL)	30°	30°	30°	30°	30°	30°
S RIB WIDTH AT TOP (LONGITUDINAL)	8.28 ±1.27	8.28 ±1.27	8.28 ±1.27	8.28 ±1.27	8.28 ±1.27	8.28 ±1.27
U GROOVE WIDTH AT TOP (LONGITUDINAL)	17.95 ±1.90	17.34 ±1.90	15.69 ±1.90	24.18 ±1.90	18.29 ±1.90	16.78 ±1.90

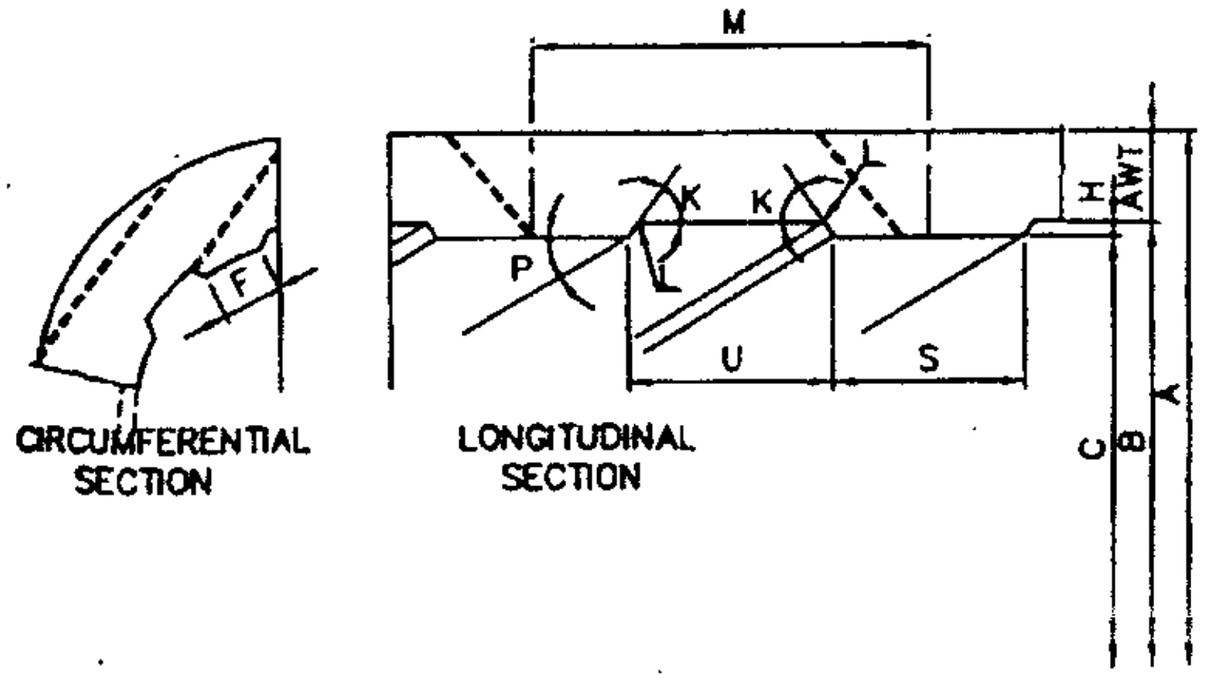

CIRCUMFERENTIAL SECTION

LONGITUDINAL SECTION

VARIANT NUMBER	ITEM NUMBER	DESCRIPTION	STD	DRAWING NUMBER	ITEM NO	MATERIAL CODE	A/C/P	UNIT	UNIT WEIGHT	GS
					VAR NO	MATERIAL SPECN		DI	QUANTITY	

TYPE OF PRODUCT OR NAME OF CUSTOMER/PROJECT

Bharat Heavy Electricals Ltd
UNIT: HIGH PRESSURE BOILER PLANT
TIRUCHIRAPALLI - 620014
355-055

	NAME	SIGNATURE	DATE
DRN	R.MURALI		9.2.99
CHD	M.SOMU		10.2.99
APPD	P.S.GURU		12.2.99

REV	DATE	ALTERED :
01		CHD & APPD:
ZONE		

CAUTION: The information on this document is the property of BHARAT HEAVY ELECTRICALS LTD. It must not be used directly or indirectly in any way detrimental to the interest of the company.

DEPT	ALL DIMENSIONS ARE IN MM	PROJECTION	SCALE	WEIGHT (Kg)	REF TO ASSY / OLD DWG
PP			NTS	–	
CODE 121					

TITLE: DIM. SPEC. FOR MULTI-RIFLED TUBING

DRAWING NO : 3-06-651-03853

REV

CEF140051

CEF140028

DRAWING NO: 3-07-510-87180

DIMENSIONAL SPECIFICATION FOR MULTI-RIFLED TUBING

MATERIAL SPECIFICATION : SA 210 Gr.A1

	PARAMETERS / TUBE SIZE →	TUBE ø44.5x7.21	
A	TUBE OUTSIDE DIAMETER	44.5	±0.20
B	MAJOR INSIDE DIAMETER	28.49	±0.20
C	MINIMUM INSIDE DIAMETER	25.59	
D	MINIMUM WALL THICKNESS	7.21	
E	NUMBER OF RIBS	6	
F	RIB WIDTH AT TOP (NOMINAL) (CIRCUMFERENTIAL)	4.78	
H	RIB HEIGHT	1.05	±0.30
K	RIB-SIDE ANGLE	55°	±15°
L	RIB RADIUS	0.13 TO 1.27	
M	RIB PITCH	25.83	±3.18
N	LEAD LENGTH (360°)	155.02	±19.05
P	LEAD ANGLE (NOMINAL)	30°	
S	RIP WIDTH AT TOP (LONGITUDINAL)	8.28	±1.27
U	GROOVE WIDTH AT TOP (LONGITUDINAL)	17.55	±1.90

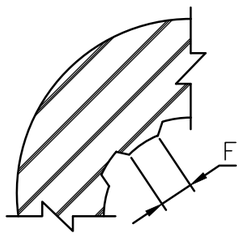

CIRCUMFERENTIAL SECTION

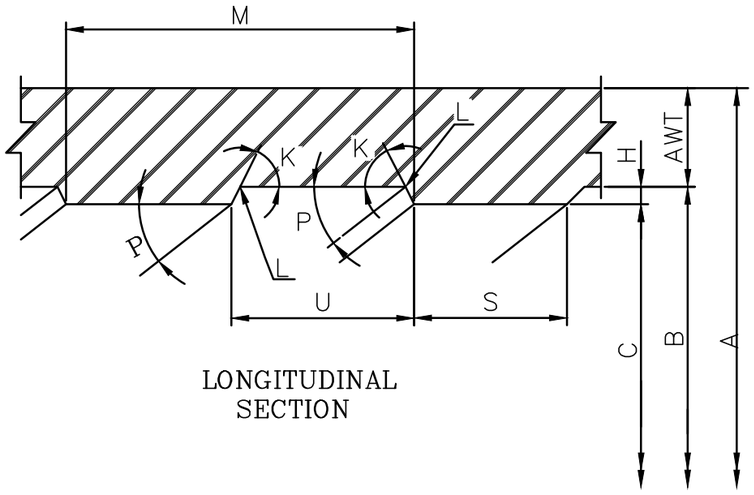

LONGITUDINAL SECTION

REV	DATE	ALTERED :
		CHD & APPD:
ZONE		

CAUTION: The information on this document is the property of BHARAT HEAVY ELECTRICALS LTD. It must not be used directly or indirectly in any way detrimental to the interest of the company.

TYPE OF PRODUCT OR NAME OF CUSTOMER/PROJECT

Bharat Heavy Electricals Ltd
UNIT: HIGH PRESSURE BOILER PLANT
TIRUCHIRAPALLI – 620014
355-055

	NAME	SIGNATURE	DATE
DRN	ASHISH K.		24.02.13
CHD	DEVINDRANATH		24.02.13
APPD	ANVAR ALI		24.02.13

DEPT	CODE	ALL DIMENSIONS ARE IN MM	PROJECTION	SCALE	WEIGHT (Kg)	REF TO ASSY / OLD DWG
PCPS	1322			N.T.S.		

TITLE: DIM. SPEC. FOR MULTI-RIFLED TUBING

DRAWING NO : 3-07-510-87180 REV 00

BHARAT HEAVY ELECTRICALS LIMITED
TIRUCHIRAPALLI 620 014

QUALITY ASSURANCE

COLOUR CODES FOR TUBES AND PIPES
(FOR BOILERS, PRESSURE VESSELS & HEAT EXCHANGERS)

REVISION	DATE	PREPARED	REVIEWED	APPROVED
01	05-02-1999	R. Sasikumar	A. R. Reddy	K. Rengachari
02	22-07-2004	K. Ganesan	U. Revisankaran	C. R. Raju
03	20-01-2009	V. Kalyanaraman	S.Selvarajan	U. Revisankaran
04	13-05-2011	C. Haritha	V. Kalyanaraman	S. Selvarajan
05	27-05-2015	Vaibhav Saxena	S. Selvarajan	U. Revisankaran
06	28-10-2015	Vaibhav Saxena	Manu Shankar. H	S. Selvarajan
07	21-12-2016	21-12-2016 Vaibhav Saxena	21/12/16 S. Selvarajan	21/12/16 U. Revisankaran

RECORD OF REVISIONS

Rev. No	Clause No.	Details of Revision	Remarks
01		New Specifications included based on TDC revision.	--
02		Amendment A1 dt. 26.04.01 issued for Rev. 01 incorporated. Colour code for SA 213 Gr. T23 added.	--
03		1) Colour code for SA 213 Gr. T92, P23, P92, SA178 Gr. D added. 2) Colour code for SA 210 Gr. C modified to BLUE only.(From BLUE & GREEN)	--
04		Colour code for super 304H added	--
05		1) First para modified for clarity for colour codes containing more than one colours. 2) UNS number for Super 304H added.	--
06		Colour code for super 304H corrected in line with Revision 04.	--
07		1) First paragraph modified to include Instructions for sequence for colour code bands. 2) Sl. No. column added in table. 3) Colour code for SA 312 Gr. TP 304H added.	--

Following Colour codes are to be applied as longitudinal bands (if not specified in other documents) on tubes & pipes to identify them to specification during receipt, storage, issue and processing. For heat exchanger tubes circumferential colour code can be provided at both ends of tubes (300 mm away from end). If the Colour code contains more than one Colour then bands of Colours shall be applied adjacent to each other without any overlap. ***In case of multiple colour bands, the sequence shall be maintained as indicated in the table.***

Sl. No.	Specification	Colour 1	Colour 2	Colour 3
1.	12 X 1 MØ	RED	YELLOW	
2.	13 Cr Mo 44	ALUMINIUM	BLACK	
3.	A 200 Gr. T5	ALUMINIUM	RED	YELLOW
4.	A 200 Gr. T9	ALUMINIUM	GREEN	YELLOW
5.	AISI 602	WHITE	YELLOW	
6.	API 5L Gr. B	ALUMINIUM		
7.	BS 3059 PART2 CDS/HFS 360	ALUMINIUM	BLACK	BROWN
8.	BS 3059 P2 S2 440	ALUMINIUM	BLACK	RED
9.	BS 3059 P2 S2 622 Gr. 490	ALUMINIUM	BLACK	GREEN
10.	BS 3602 PART1 CDS 360	ALUMINIUM	BLACK	BLUE
11.	NFA49-213 42C	ALUMINIUM	BLUE	BROWN
12.	NFA49-213 TU 10CD9.10	ALUMINIUM	BLUE	RED
13.	NFA49-213 TU 15CD2.05	ALUMINIUM	BLUE	GREEN
14.	NFA49-213 TU Z10CD9	ALUMINIUM	BLUE	YELLOW
15.	NFA49-213 TU Z10CDVNB09.01	ALUMINIUM	GREEN	RED
16.	SA 106 Gr. B	RED		
17.	SA 106 Gr. C	BLUE		
18.	SA 178 Gr. D	ORANGE		
19.	SA 179	BLACK	BLUE	GREEN
20.	SA 192	WHITE		
21.	SA 199 T5	BLUE	BROWN	RED
22.	SA 209 Gr. T1	ALUMINIUM	RED	
23.	SA 210 Gr. A1	YELLOW		
24.	SA 210 Gr. C	BLUE		
25.	SA 213 Gr. T11	ALUMINIUM	YELLOW	
26.	SA 213 Gr. T12	BROWN	YELLOW	
27.	SA 213 Gr. T2	BROWN	GREEN	
28.	SA 213 Gr. T22	GREEN	RED	
29.	SA 213 Gr. T23	RED	WHITE	
30.	SA 213 Gr. T5	BLACK	BROWN	GREEN
31.	SA 213 Gr. T9	BROWN	WHITE	
32.	SA 213 Gr. T91	GREEN	YELLOW	
33.	SA 213 Gr. T92	BROWN	BLUE	
34.	SA 213 Gr. TP 304	BLUE	GREEN	YELLOW
35.	SA 213 Gr. TP 304H	BLACK	BLUE	YELLOW
36.	SA 213 Gr. TP 304L	BLUE	WHITE	YELLOW
37.	SA 213 Gr. TP 309H	BLACK	BROWN	YELLOW
38.	SA 213 Gr. TP 316	BROWN		
39.	SA 213 Gr. TP 316 Ti	BLACK	BLUE	
40.	SA 213 Gr. TP 316L	BLUE	BROWN	YELLOW
41.	SA 213 Gr. TP 321	BLUE	WHITE	
42.	SA 213 Gr. TP 321H	BLACK	WHITE	
43.	SA 213 Gr. TP 347H	BLACK	YELLOW	

Sl. No.	Specification	Colour 1	Colour 2	Colour 3
44.	SA 268 Gr. TP 405	ALUMINIUM	GREEN	
45.	SA 268 Gr. TP 410	BROWN	RED	YELLOW
46.	SA 268 Gr. TP 443	BLUE	GREEN	WHITE
47.	SA 269 TP 316	GREEN	RED	YELLOW
48.	SA 312 Gr. TP 304	BLUE	YELLOW	
49.	SA 312 Gr. TP 304L	BLUE	RED	YELLOW
50.	***SA 312 Gr. TP 304H***	***BLACK***	***BLUE***	***YELLOW***
51.	SA 312 Gr. TP 316	BLACK	GREEN	
52.	SA 312 Gr. TP 316L	BLACK	BLUE	BROWN
53.	SA 312 Gr. TP 321	BLUE	BROWN	
54.	SA 312 Gr. TP 347	BLUE	RED	WHITE
55.	SA 333 Gr. 1	BLACK	BROWN	RED
56.	SA 333 Gr. 3	BLACK	GREEN	RED
57.	SA 333 Gr. 6	BLUE	GREEN	RED
58.	SA 334 Gr. 1	BROWN	GREEN	RED
59.	SA 334 Gr. 3	BLACK	RED	YELLOW
60.	SA 334 Gr. 6	BLACK	BLUE	RED
61.	SA 335 Gr. P1	BROWN	GREEN	YELLOW
62.	SA 335 Gr. P11	GREEN	WHITE	
63.	SA 335 Gr. P12	BLACK	RED	
64.	SA 335 Gr. P2	BLUE	BROWN	GREEN
65.	SA 335 Gr. P22	BLUE	RED	
66.	SA 335 Gr. P23	RED	WHITE	
67.	SA 335 Gr. P5	BLACK	BROWN	
68.	SA 335 Gr. P9	ALUMINIUM	BROWN	
69.	SA 335 Gr. P91	BROWN	RED	
70.	SA 335 Gr. P92	BROWN	BLUE	
71.	SB 163 Inconel	BLACK	GREEN	YELLOW
72.	ST 35.4	ALUMINIUM	BLUE	
73.	Steel 20	GREEN		
74.	Structural Tubes & Pipes	BLUE	BROWN	WHITE
75.	X20 Cr Mo V 121	BLACK		
76.	SA 213 UNS S30432(Super 304)	BLACK	RED	GREEN

@@@@@@@@@@

Annexure-1

INTEGRITY PACT

Between

Bharat Heavy Electricals Ltd. (BHEL), a company registered under the Companies Act 1956 and having its registered office at "BHEL House", Siri Fort, New Delhi - 110049 (India) hereinafter referred to as "The Principal", which expression unless repugnant to the context or meaning hereof shall include its successors or assigns of the ONE PART

and

_____, (description of the party along with address), hereinafter referred to as "The Bidder/ Contractor" which expression unless repugnant to the context or meaning hereof shall include its successors or assigns of the OTHER PART

Preamble

The Principal intends to award, under laid-down organizational procedures, contract/s for Manufacture & Supply of Seamless Rifle tubes to Specification SA210GRA1 & SA210GRC _____. The Principal values full compliance with all relevant laws of the land, rules and regulations, and the principles of economic use of resources, and of fairness and transparency in its relations with its Bidder(s)/ Contractor(s).

In order to achieve these goals, the Principal will appoint Independent External Monitor(s), who will monitor the tender process and the execution of the contract for compliance with the principles mentioned above.

Section 1- Commitments of the Principal

1.1 The Principal commits itself to take all measures necessary to prevent corruption and to observe the following principles:-

1.1.1 No employee of the Principal, personally or through family members, will in connection with the tender for, or the execution of a contract, demand, take a promise for or accept, for self or third person, any material or immaterial benefit which the person is not legally entitled to.

1.1.2 The Principal will, during the tender process treat all Bidder(s) with equity and reason. The Principal will in particular, before and during the tender process, provide to all Bidder(s) the same information and will not provide to any Bidder(s) confidential/ additional information through which the Bidder(s) could obtain an advantage in relation to the tender process or the contract execution.

1.1.3 The Principal will exclude from the process all known prejudiced persons.

1.2 If the Principal obtains information on the conduct of any of its employees which is a penal offence under the Indian Penal Code 1860 and Prevention of Corruption Act 1988 or any other statutory penal enactment, or if there be a substantive suspicion in this regard, the Principal will inform its Vigilance Office and in addition can initiate disciplinary actions:

Section 2 - Commitments of the Bidder(s)/ Contractor(s)

2.1 The Bidder(s)/ Contractor(s) commit himself to take all measures necessary to prevent corruption. He commits himself to observe the following principles during his participation in the tender process and during the contract execution.

2.1.1 The Bidder(s)/ Contractor(s) will not, directly or through any other person or firm, offer, promise or give to the Principal or to any of the Principal's employees involved in the tender process or the execution of the contract or to any third person any material, immaterial or any other benefit which he/ she is not legally entitled to, in order to obtain in exchange any advantage of any kind whatsoever during the tender process or during the execution of the contract.

2.1.2 The Bidder(s)/ Contractor(s) will not enter with other Bidder(s) into any illegal or undisclosed agreement or understanding, whether formal or informal. This applies in particular to prices, specifications, certifications, subsidiary contracts, submission or non-submission of bids or any other actions to restrict competitiveness or to introduce cartelization in the bidding process.

2.1.3 The Bidder(s)/ Contractor(s) will not commit any penal offence under the relevant Indian Penal Code (IPC) and Prevention of Corruption Act; further the Bidder(s)/ Contractor(s) will not use improperly, for purposes of competition or personal gain, or pass on to others, any information or document provided by the Principal as part of the business relationship, regarding plans, technical proposals and business details, including information contained or transmitted electronically.

2.1.4 Foreign Bidder(s)/ Contractor(s) shall disclose the name and address of agents and representatives in India and Indian Bidder(s)/ Contractor(s) to disclose their foreign principals or associates. The Bidder(s)/ Contractor(s) will, when presenting his bid, disclose any and all payments he has made, and is committed to or intends to make to agents, brokers or any other intermediaries in connection with the award of the contract.

2.2 The Bidder(s)/ Contractor(s) will not instigate third persons to commit offences outlined above or be an accessory to such offences.

2.3 The Bidder(s)/ Contractor(s) shall not approach the Courts while representing the matters to IEMs and will await their decision in the matter.

Section 3 - Disqualification from tender process and exclusion from future contracts

If the Bidder(s)/ Contractor(s), before award or during execution has committed a transgression through a violation of Section 2 above, or acts in any other manner such as to put his reliability or credibility in question, the Principal is entitled to disqualify the Bidder(s)/ Contractor(s) from the tender process or take action as per the separate "Guidelines on Banning of Business dealings with Suppliers/ Contractors", framed by the Principal.

Section 4 - Compensation for Damages

4.1 If the Principal has disqualified the Bidder from the tender process prior to the award according to Section 3, the Principal is entitled to demand and recover the damages equivalent Earnest Money Deposit/ Bid Security.

4.2 If the Principal has terminated the contract according to Section 3, or if the Principal is entitled to terminate the contract according to section 3, the Principal shall be entitled to

demand and recover from the Contractor liquidated damages equivalent to 5% of the contract value or the amount equivalent to Security Deposit/ Performance Bank Guarantee, whichever is higher.

Section 5 - Previous Transgression

5.1 The Bidder declares that no previous transgressions occurred in the last 3 years with any other company in any country conforming to the anti-corruption approach or with any other Public Sector Enterprise in India that could justify his exclusion from the tender process.

5.2 If the Bidder makes incorrect statement on this subject, he can be disqualified from the tender process or the contract, if already awarded, can be terminated for such reason.

Section 6 - Equal treatment of all Bidders/ Contractors / Sub-contractors

6.1 The Principal will enter into agreements with identical conditions as this one with all Bidders and Contractors. In case of sub-contracting, the Principal contractor shall be responsible for the adoption of IP by his sub-contractors and shall continue to remain responsible for any default by his sub-contractors.

6.2 The Principal will disqualify from the tender process all bidders who do not sign this pact or violate its provisions.

Section 7 - Criminal Charges against violating Bidders/ Contractors /Subcontractors

If the Principal obtains knowledge of conduct of a Bidder, Contractor or Subcontractor, or of an employee or a representative or an associate of a Bidder, Contractor or Subcontractor which constitutes corruption, or if the Principal has substantive suspicion in this regard, the Principal will inform the Vigilance Office.

Section 8 - Independent External Monitor(s)

8.1 The Principal appoints competent and credible Independent External Monitor for this Pact. The task of the Monitor is to review independently and objectively, whether and to what extent the parties comply with the obligations under this agreement.

8.2 The Monitor is not subject to instructions by the representatives of the parties and performs his functions neutrally and independently. He reports to the CMD, BHEL.

8.3 The Bidder(s)/ Contractor(s) accepts that the Monitor has the right to access without restriction to all contract documentation of the Principal including that provided by the Bidder(s)/ Contractor(s). The Bidder(s)/ Contractor(s) will grant the monitor, upon his request and demonstration of a valid interest, unrestricted and unconditional access to his contract documentation. The same is applicable to Sub-contractor(s). The Monitor is under contractual obligation to treat the information and documents of the Bidder(s)/ Contractor(s) / Sub-contractor(s) with confidentiality in line with Non- disclosure agreement.

8.4 The Principal will provide to the Monitor sufficient information about all meetings among the parties related to the contract provided such meetings could have an impact on the contractual relations between the Principal and the Contractor. The parties offer to the Monitor the option to participate in such meetings.

8.5 The role of IEMs is advisory, would not be legally binding and it is restricted to resolving issues raised by an intending bidder regarding any aspect of the tender which allegedly restricts competition or bias towards some bidders. At the same time, it must be understood that IEMs are not consultants to the Management. Their role is independent in nature and the advice once tendered would not be subject to review at the request of the organization.

8.6 For ensuring the desired transparency and objectivity in dealing with the complaints arising out of any tendering process, the matter should be examined by the full panel of IEMs jointly as far as possible, who would look into the records, conduct an investigation, and submit their joint recommendations to the Management.

8.7 The IEMs would examine all complaints received by them and give their recommendations/ views to CMD, BHEL, at the earliest. They may also send their report directly to the CVO and the Commission, in case of suspicion of serious irregularities requiring legal/ administrative action. IEMs will tender their advice on the complaints within 10 days as far as possible.

8.8 The CMD, BHEL shall decide the compensation to be paid to the Monitor and its terms and conditions.

8.9 IEM should examine the process integrity, they are not expected to concern themselves with fixing of responsibility of officers. Complaints alleging mala fide on the part of any officer of the organization should be looked into by the CVO of the concerned organisation.

8.10 If the Monitor has reported to the CMD, BHEL, a substantiated suspicion of an offence under relevant Indian Penal Code/ Prevention of Corruption Act, and the CMD, BHEL has not, within reasonable time, taken visible action to proceed against such offence or reported it to the Vigilance Office, the Monitor may also transmit this information directly to the Central Vigilance Commissioner, Government of India.

8.11 The number of Independent External Monitor(s) shall be decided by the CMD, BHEL.

8.12 The word `Monitor' would include both singular and plural.

Section 9 - Pact Duration

9.1 This Pact shall be operative from the date IP is signed by both the parties till the final completion of contract for successful bidder and for all other bidders 6 months after the contract has been awarded. Issues like warranty / guarantee etc. should be outside the purview of IEMs.

9.2 If any claim is made/ lodged during currency of IP, the same shall be binding and continue to be valid despite the lapse of this pact as specified above, unless it is discharged/ determined by the CMD, BHEL.

Section 10 - Other Provisions

10.1 This agreement is subject to Indian Laws and jurisdiction shall be registered office of the Principal, i.e. New Delhi.

10.2 Changes and supplements as well as termination notices need to be made in writing. Side agreements have not been made.

10.3 If the Contractor is a partnership or a consortium, this agreement must be signed by all partners or consortium members.

10.4 Should one or several provisions of this agreement turn out to be invalid, the remainder of this agreement remains valid. In this case, the parties will strive to come to an agreement to their original intentions.

10.5 Only those bidders / contractors who have entered into this agreement with the Principal would be competent to participate in the bidding. In other words, entering into this agreement would be a preliminary qualification.

For & On behalf of the Principal	For & On behalf of the Bidder/ Contractor
K. UDAYA KUMAR Deputy Manager MM / RM / Purchase / Tube. Materials Management / FB BHEL, TRICHY - 620 014.	
(Office Seal)	(Office Seal)
Place: Trichy	
Date: 12/03/2022	
Witness:	Witness:
(Name & Address) BHASKARNATH BISWAS Dy. Engineer MM/Purchase/Tubes BHEL, TRICHY-620014	(Name & Address)

ANNEXURE - V

Technical: Seamless Tubes & Pipes Suppliers (Carbon / Alloy / Stainless Steel) Supplier Facility Report

1. Name of the Company

2. Address of the Registered Office (Telephone, E-Mail, Fax)

3. Factory Location and Address (Telephone, E-Mail, Fax)

4. **Installed Capacity (Tonnes / Year)**

4.1) Carbon Steel

a) SA 192

b) SA 210 Gr. A1, C

c) SA 106 Gr. B, C

d) Riffled Tube / SA 210 Gr. C

4.2) Alloy Steel

a) SA 335 P11, P12, P22

b) SA 213 T11, T22

c) SA 335 P91, SA 213 T91

d) SA 335 P23, P92

e) SA 213 T23, T92

f) Riffled Tube / SA 213 T12, T22, T23

4.3) Stainless Steel

a) SA 213 TP 304H

b) SA 213 TP 347H

c) SA 213 TP 347HFG

d) Super 304H

5. **Are you making your own steel (Bloom) for making Tubes / Pipes ?** YES ☐ NO ☐

6. If yes, for Sl. No. 5

   a) Type of Furnace

   b) Capacity of furnaces (Metric Tonnes / Melt)

   c) Facility for manufacture of Blooms

7. If No, for Sl. No. 5

   a) Source of Raw Material (Blooms)

8. **Tube / Pipe Manufacturing Facility details**

   8.1 Capacity of the rolling mill with respect to Diameter (Minimum and Maximum), Thickness (Minimum and Maximum) and Length (Maximum)

   a) Through Hot Finishing

   b) Through Cold Finishing

   8.2 Type & Make of Hot Mill along with the details of the Individual Equipments

   8.3 Type & Make of Cold Mill along with the details of the Individual Equipments

9. **Heat Treatment Facility Details**

   a) Capacity of the Furnaces

   b) Type of Heat Treatment Carried out (Batch or Continuous)

10. **In House Testing Equipments Details**

   a) Online UT Facilities

   b) Online Eddy Current (EC) Facility

   c) Hydro Test Facilities (Indicate the Maximum Pressure)

   d) Chemical and Mechanical Testing Facilities

11. **Details of Accreditation for Quality Systems (Like ISO, ASME, API etc.,)**

12. Are you Approved by any Third Party / Statutory Agency ? If so, specify the Agency **(Attach details in ENGLISH)**

13. Have you manufactured the following Size / Specification / Length to BHEL or any other well-known Boiler Manufacturer for Boiler Application
Please provide the details of to whom, when and how much supplied.

a) TUBES:

TUBES REQUIREMENT- LENGTH : 6500 mm to 13800 mm			
SL. NO.	**OUTER DIAMETER**	**WALL THICKNESS**	**SPECIFICATION**
1	21.3 to 73.01 mm	2.11 to 14.02 mm	SA 106 Gr B / Gr C (Carbon Steel) SA 335 P12, P22, P23, P91, P92 (Alloy Steel)
2	28.6 to 76.1 mm	3.2 to 12.5 mm	SA 192 / SA 210 Gr A1 / Gr C (Carbon Steel) SA 210 Gr. C (Rifle Tubes) SA 213 T12, T22, T23 (Alloy Rifle Tubes)
3	14 to 76.1 mm	3.2 to 12.5 mm	SA 213 T11, T22, T23, T91, T92 (Alloy Steel) SA 213 TP 304 H, TP 347 H, TP 347 HFG, Super 304 H (SS)

b) PIPES:

PIPES REQUIREMENT – LENGTH 3000 mm to 9000 mm			
SL. NO.	**OUTER DIAMETER**	**WALL THICKNESS**	**SPECIFICATION**
1	88.9 to 864.00 mm	3.96 to 148.0 mm	SA106 Gr B / Gr C (Carbon Steel)
2	88.9 to 965.00 mm	3.96 to 130.0 mm	SA335 P11, P12, P22, P23 (Alloy Steel)
3	127.0 to 812.8 mm	11.50 to 100.00 mm	SA335 P91, P92 (Alloy Steel)
4	88.9 to 323.9 mm	3.05 to 12.5 mm	SA312 TP304H, 321 H, 316 (SS)

14. Please go thro the attached **Technical Delivery Condition (TDC)** and give point-by-point confirmation.

a) For Tubes: TDC: 0:102, 0:105, 0:119

b) For Pipes: TDC: 0:101, TDG: 32, TDG: 100, TDG: 101, TDG: 26, TDG: 6876

PLACE :

DATE :

SIGNATURE WITH SEAL

NOTE: Enclose Additional Sheets / Annexures wherever required referring the Sl. No. of this format.

******