FIRST ANGLE PROJECTION (ALL DIMENSIONS ARE IN mm)

DRAWING NO 0 718 12 01 111

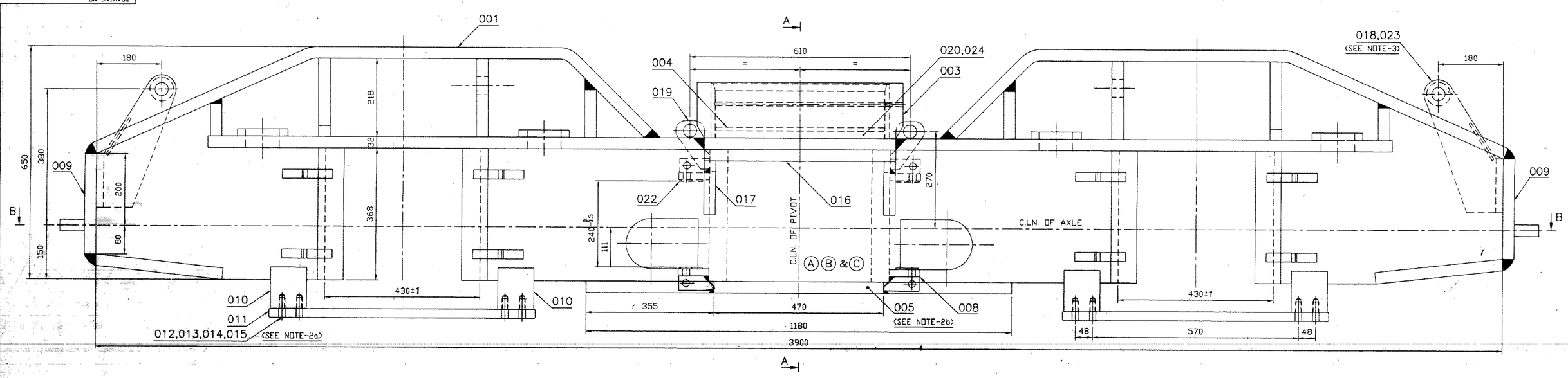

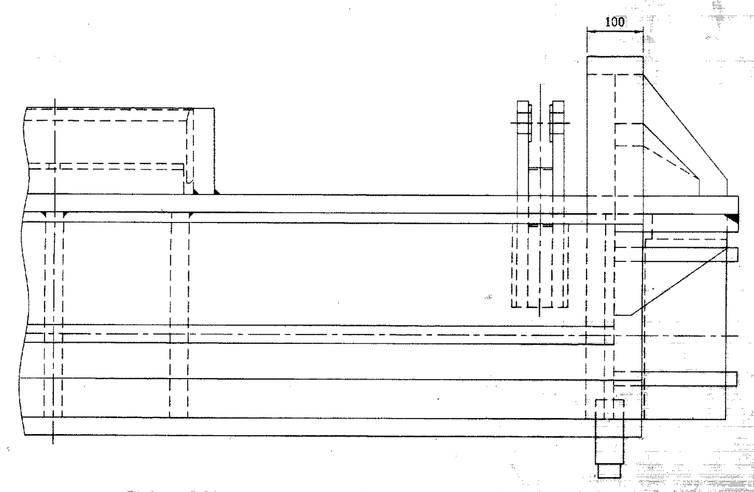

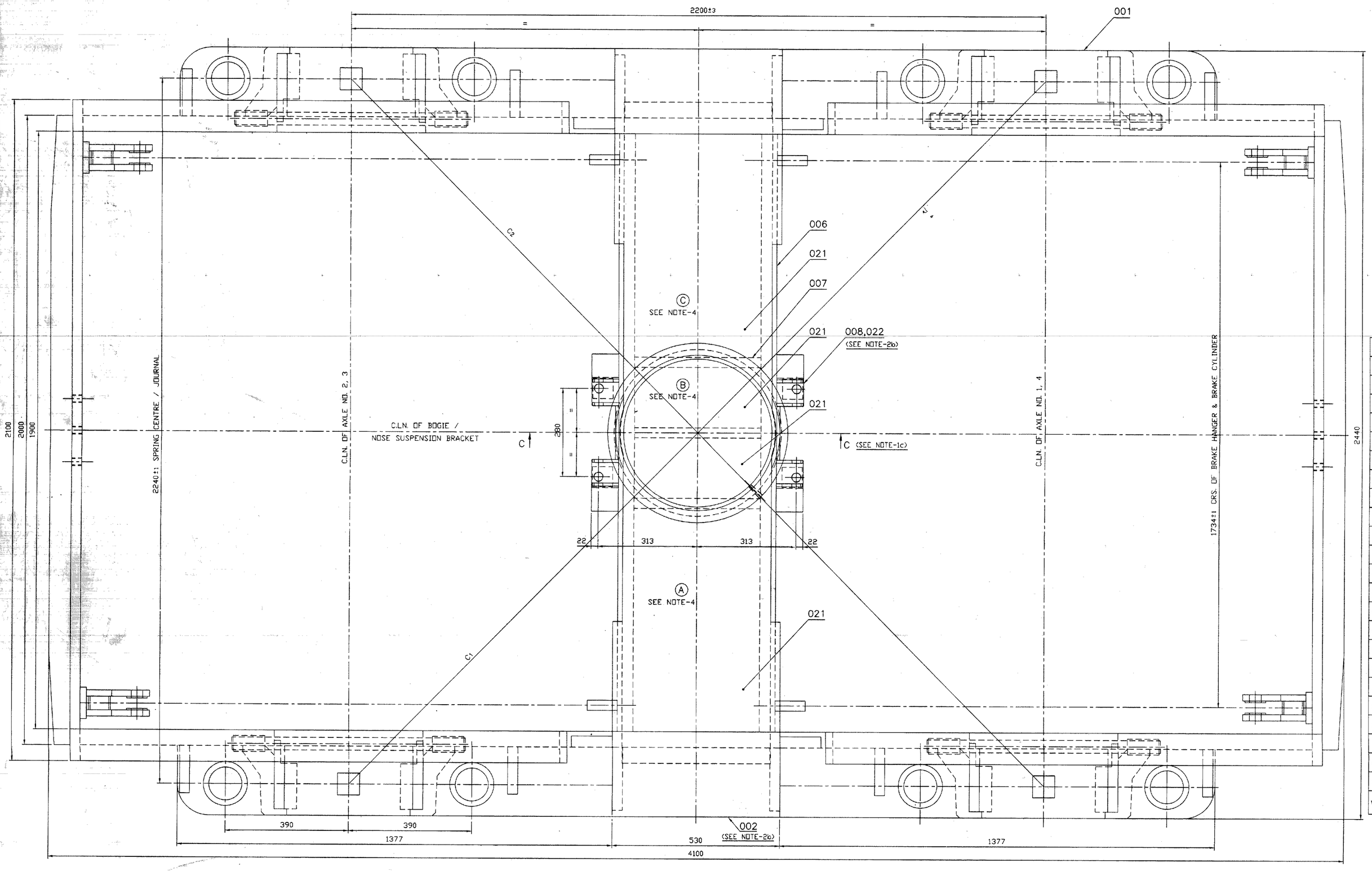

FINISH:– FABRICATED ASSY. TO BE PAINTED WITH TWO COATS OF EPOXIDE ANTICORROSIVE PAINT TO AA 5610005019 AS PER PROCESS SPECIFICATION NO. JS 0674199.

FINAL FINISH:– AS PER WORK ORDER PAINTING SCHEDULE.

NOTES:–

1. FOR DETAILS OF SECTION:–
   a. FOR SECTION–AA REFER DRG. NO. 1 718 12 01 106
   b. FOR SECTION–BB REFER DRG. NO. 1 718 12 01 106
   C. FOR SECTION–CC REFER DRG. NO. 1 718 12 01 104
2. FOR DETAILS OF WELDING & ASSY.
   a. FOR IT. NOS. 010 TO 015 REFER DRG. NO. 1 718 12 01 104
   b. FOR IT. NOS. 002, 005 TO 008 & 022 REFER DRG. NO. 1 718 12 01 105
3. ITEMS 018,019 & 025 SHALL BE TACK WELDED IN FABRICATION ASSY. AND FINAL WELDING TO BE DONE ON LOCO ASSY.
4. ALL THE 4 POCKETS TO BE FILLED WITH BALLAST WEIGHTS TO IT. 021 (TOTAL APPROX. WT. 1.4 METRIC TON) BEFORE WELDING BOTTOM PLATE IT. 005 IN POSITION CENTRAL POCKETS TO HAVE 10 BRICKS EACH AND SIDE POCKETS TO HAVE 33 BRICKS EACH. SUITABLE SUPPORT POCKETS ARE MARKED A,B, & C.
5. ALL WELD TO CONFORM TO CORPORATE STANDARD AA 062 21 01 GRADE II (FOR BUTT WELDS) & GRADE III (FOR FILLET WELDS).
6. DIMENSIONS MARKED THUS * GIVEN FOR D.O. REFERENCE ONLY.
7. REF. NOTE–4 & NOTE THAT FABRICATOR SHALL ENSURE THAT REQUIRED BALLASTING HAS BEEN DONE AND FINALLY WIGHMENT TO BE DONE TO CHECK WEIGHT AFTER BALLASTING.
8. VAR. 00 FOR WHEEL ø1000 & VAR. 01 FOR WHEEL ø1092.

TECHNICAL REQUIREMENTS:–

(i). THE DIFFERENCE OF WHEEL BASE BETWEEN L.H. & R.H. SIDES SHALL NOT EXCEED 1 mm.
(ii). THE DIFFERENCE IN DIAGONALS C1 & C2 DISTANCE BETWEEN HORN GAP CENTRES SHALL NOT EXCEED 1.5 mm.
(iii). FOR BOGIE FRAME, ALIGNMENT CHECK REFER DRG. 2 718 12 01 104.

STYLE LIST

STYLE NO.	ITEM VAR.	DESCRIPTION	VERIFIED SIGN.	DATE
956300	00	BOGIE FRAME ASSY. (WHEEL DIA 1000)		
359497	01	BOGIE FRAME ASSY. (WHEEL DIA 1092)		

VAR. 01	VAR. 00	REMARKS	VAR NO.	ITEM NO.	DESCRIPTION	STD	DRAWING NO.	IT. NO. / VAR.	MATL. CODE / MATL. SPECN	A/C TYPE	UNIT WT. / QTY.	CS	ITEM
001	--			024	LINER (20TK)		4 718 12 01 025	001			26.665		
004	--			023	BRACKET FOR OUTER HANGER		2 718 12 01 017	00			17.107		
002	002			022	BRACKET ASSY. TOP		2 718 12 01 106	00			5.535		
086	086	B. OT SEE NOTE–4		021	BALLAST BLOCK		4 718 31 04 034	001	ST. 956022		15.917		
--	001	LOOSE SUPPLY		020	LINER (45TK)		4 718 12 01 018	003			57.439		
004	004	SEE NOTE–3		019	BRACKET FOR INNER HANGER		3 718 12 01 015	001			1.676		
--	004	SEE NOTE–3		018	BRACKET FOR OUTER HANGER		2 718 12 01 009	00			15.307		
004	004			017	GUSSET		4 718 12 01 003	001			4.901		
002	002			016	SUPPORT PLATE		4 718 12 01 012	001			28.404		
016	016			015	SPLIT PIN ø5 x 75Lg.				JS7171089830 / AA7171089		0.0107		
016	016			014	WASHER SPRG. SC. B16 – ST				AA7164002088 / AA7164002		0.0089		
016	016			013	NUT HEX. HD. M16				AA7151115059 / AA7151115		0.0036		
016	016			012	STUD		4 718 12 01 026	001	ST. 959392		0.156		
004	004			011	HORN STAY SUB ASSLY		3 718 12 01 105	00			6.497		
008	008			010	WEDGE BLOCK		3 718 12 01 012	001	ST. 956178		4.406		
002	002			009	CROSS PLATE SUB ASSY.		2 718 12 01 005	00			180.400		
002	002			008	BRACKET ASSY. BOTTOM		2 718 12 01 105	00			3.648		
003	003			007	STRETCHER PLATE SPACER		4 718 12 01 008	001			36.571		
002	002	S.C.O.		006	STRETCHER PLATE VERTICAL 50TK x 368				AA1011819171 / AA10119	mm	274.786 / 1900		
001	001	S.C.O. SEE NOTE–4		005	STRETCHER PLATE 32TK x 470				AA1011819171 / AA10119	mm	248.250 / 2100		
001	001	LOOSE SUPPLY		004	FRICTION LINER (10TK)		4 718 12 01 018	002			13.332		
001	001			003	PIVOT SEAT SUB ASSY.		2 718 12 01 102	00			91.408		
001	001			002	STRETCHER PLATE TOP		3 718 12 01 101	001			309.040		
002	002			001	BOGIE SIDE FRAME		0 718 12 01 112	00			1060.871		

CARD TYPE – 3 | CARD TYPE – 1 | CARD TYPE – 2

ADDITIONAL INFORMATION

STATUS OF DRAWING: U

DISTRIBUTION OF PRINTS: LME (DV) – 1; LMP (DV) – 2; LMM (DV) – 3

TYPE OF PRODUCT: 700 hp DESL
OR
NAME OF CUSTOMER/PROJECT

BHARAT HEAVY ELECTRICALS LTD. JHANSI

	NAME	SIGN	DATE	NO. OF VAR
DRN	O.P.JHA	Sd/–	05.07.00	02
CHD	D.R.BAIN	Sd/–	05.07.00	
APPD	G.RAJ	Sd/–	05.07.00	

DEPT LME; CODE 404; GRADE OF UN. TOL. DIM. GMT; SCALE 1 : 5; WEIGHT (KG) VAR.00–5437.08 VAR.01–5433.519; REF. TO ASSY. NO. 0 718 12 01 110; ITEM NO. 001 002; NO. OF ITD 024

TITLE: BOGIE FRAME ASSY. (FOR WHEEL ø1000)

CARD CODE; DRAWING NO. 0 718 12 01 111; REV. 09; SHEET NO. 01; NO. OF SHEETS 01

REV	DATE	ALTERED / CHECKED
09	23.9.16	IN BOM REF. DRG. NO OF ITEM NO. 011 WAS 3 718 12 01 025.
08	17.8.16	IN BOM REF. DRG. NO OF ITEM 022 WAS 2 718 12 01 001, VAR. 01
07	24.4.15	IN BOM REF. DRG. NO OF ITEM 008 WAS 2 718 12 01 001. VAR. 00.
06	06.09.11	DIMN. 430±1 WAS 430±0.3.
05	25.5.11	STYLE LIST ADDED.
04	01.10.07	DRG. REDRAWN AND UPDATED. VAR.01 ADDED.
03	05.4.07	SUCCESS

THE INFORMATION ON THIS DOCUMENT IS THE PROPERTY OF BHARAT HEAVY ELECTRICALS LIMITED. IT MUST NOT BE USED DIRECTLY OR INDIRECTLY IN ANY WAY DETRIMENTAL TO THE INTEREST OF THE COMPANY.

INVENTORY NO. | SIGN & DATE | REF. DRG. NO.

AVAILABLE IN EDMS