FIRST ANGLE PROJECTION

(ALL DIMENSIONS ARE IN mm)

DWG. No. 2 653 98 10014

COPYRIGHT AND CONFIDENTIAL
THE INFORMATION ON THIS DOCUMENT IS THE PROPERTY OF BHARAT HEAVY ELECTRICALS LTD. IT MUST NOT BE USED DIRECTLY OR INDIRECTLY IN ANY WAY DETRIMENTAL TO THE INTEREST OF THE COMPANY.

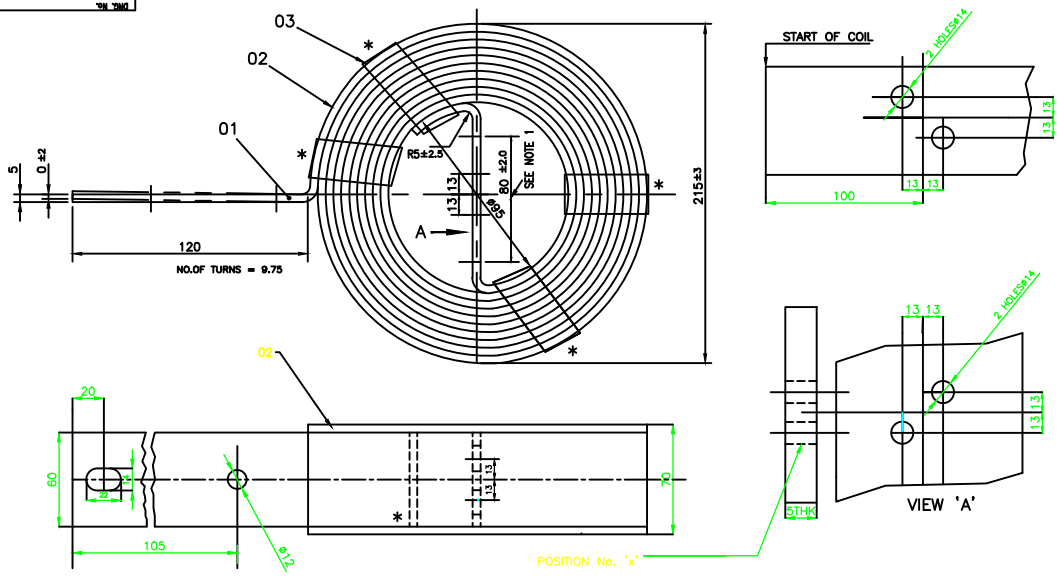

NOTE:

1. BENDING RADIUS SHOULD START AFTER THIS DIMENSIONS.
2. USE ITEM 02 FOR INTER TURN INSULATION.
3. BIND 10 LAYERS OF ITEM 03 AT PLACES MARKED THUS (*).
4. THE REACTOR SHOULD BE VACCUM IMPREGNATED WITH CLASS-C VARNISH AND BAKED AT 120° C FOR 48 HOURS.
5. AT Posn.No. 'x' THE Sl.No. & SUPPLIER CODE TO BE PUNCHED BY THE SUPPLIER. (SUPPLIER CODE WILL BE GIVEN BY BHEL)

- DIMENSIONS TO BE CONTROLLED WITHIN LIMITS AS SHOWN
- MACHINING TOLERANCE +/- 0.25 MM UNLESS OTHERWISE SHOWN
- NON-MACHINING TOLERANCE AS PER ED 0230499

QTY.		UNIT OF QTY.	DESCRIPTION	ITEM No.	STD	DRAWING No.	ITEM No.	MATERIAL CODE	A	COMP. CODE	UNIT Wt (Kg)	BUY CODE	ZONE
1			RESI GLASS TAPE 0.4 Tk x 25 W x 10000	03									
1			4 LAYERS OF IMPREGNATED FIBRE GLASS-CLOTH CLASS C 5 MM THK x 68 x 5500	02									
1			5 Tk x 60 x 5200LG COPPER STRIP FULLY ANNEALED	01				CN1201907093			13.52		
VARIANT	VARIANT	RM UNIT QTY.					VARIANT	MATERIAL CODE	C		QUANTITY		

REV.	DATE	ALTERED	REV.	DATE	ALTERED
09	16.05.02	sd/-	10	23/08-19	
		CHECKED sd/-			CHECKED
		APPROVED sd/-			APPROVED
REDRAWN (AUTOCAD)			REDRAWN		

	NAME	SIGN	DATE
DRAWN	V.ACHAR	sd/-	23/01/81
CHECKED	A.N.N.	sd/-	
APPROVED			

DEPT. ENGG. CODE 402

BHARAT HEAVY ELECTRICALS LIMITED.
ELECTRONICS DIVISION, BANGALORE

TITLE: DE-COUPLING REACTOR

CARD CODE

No. OF SHEETS

SHEET No.

WBS No.

DRG. No. 2 653 98 10014 REV 10

FORM No. A3-03

A3 SIZE

REF. DRG. No.

SIGN. & DATE

INVENTORY No.