NUCLEAR POWER CORPORATION OF INDIA

2x1000MWe KUDANKULAM NPP – 3 & 4

TECHNICAL SPECIFICATION

FOR

BUTTERFLY VALVES (WATER SYSTEM)

SPECIFICATION NO. PE-TS-456-100-M008

BHARAT HEAVY ELECTRICALS LIMITED, POWER SECTOR
PROJECT ENGINEERING MANAGEMENT
NOIDA, INDIA

CONTENTS

Sl No.	SECTION	TITLE	NO. OF SHEETS
1.	SECTION-I	PROJECT INFORMATION	1
		SPECIFIC TECHNICAL REQUIREMENTS	10
2.	SECTION-II	i) DATA SHEET-A	2
		ii) QUALITY PLAN	5
		iii) COMPLIANCE SHEET	1
3	ANNEXURE-I	VALVE SPECIFICATION SHEET	8
	ANNEXURE-II	SEISMIC RESPONSE SPECTRUM	30
	ANNEXURE-III	PROCEDURE FOR SEISMIC QUALIFICATION	61
	ANNEXURE-IV	RELEVANT SYSTEM DRAWINGS	69
	ANNEXURE-V	LIST OF NPCIL APPROVED FACILITIES	23

PROJECT INFORMATION

Kudankulam Nuclear Power Plants – Unit 3 & 4 are designed by Russian Federation.

Nuclear Power Corporation of India Limited (hereinafter referred as NPCIL) has already established 2 x 1000 MWe Nuclear power plants and is in the process of setting up of two more 2 x 1000 MWe Nuclear power plants (Unit 3 & 4) at Kudankulam, Radhapuram Taluk, Tirunelveli District, Tamil Nadu located at a distance of 27 km from Kanyakumari.

Kudankulam Nuclear Power Plant (KKNPP) site is a coastal site on the shores of Gulf of Mannar located on the South-Eastern tip of India near Kanyakumari. There is a Major District Road (MDR) from Kanyakumari to Tiruchendur passing through Kudankulam village at a distance of 2-3 Kms from the site. The MDR joins National Highway No.44 at about 8 Kms north of Kanyakumari. Site is accessible by road from Nagercoil (approx 35 Kms) and from Kanyakumari.

The nearest railway station is Kanyakumari (27kms). Nagercoil is the nearest major town. Nearest port to the project site is Tuticorin and nearest airport is Trivandrum / Tuticorin.

SECTION-I

SPECIFIC TECHNICAL REQUIREMENTS

1.0 GENERAL

1.1 The valves shall meet the technical requirements and conform to the requirements mentioned in this specification and 'Valve Specification Sheet' in Annexure-I. However, in the event of contradictions between the two, the latter will prevail.

1.2 The technical requirements for valves shall, in general, be as per the attached Data sheet A of Section-II.

2.0 SCOPE OF SUPPLY

2.1 The valves complete with all accessories shall be supplied as per Data sheets A.. For detail refer the same. Each valve (quantity and other details specified in Data Sheet-A) shall be complete with the following accessories: Lifting arrangement provision for handling i.e., lifting lugs, eye bolts etc.

2.2 Commissioning spares, as mentioned in Datasheet-A.

2.3 Set of special tools and tackles if required for the maintenance, erection etc. of the equipment supplied.

2.4 Finish paints for touch-up painting of equipment after erection at site in sealed containers.

3.0 CODES AND STANDARDS:

3.1 Applicable codes and standards
(i) American National Standards Institution (ANSI) standards.
(ii) American Petroleum Institute (API-598) standards.
(iii) American Society for Testing Materials (ASTM) standards.
(iv) Manufacturer's Standards Specification (MSS) - Standard Practices.
(v) ANSI B 16.34 - Steel Valves flanged and butt welding ends.
(vi) ANSI B 16.5 - Steel Pipe Flanges and Flanged Fittings.
(vii) A WW A C 504- American Water Works Association Standard for Rubber-Seated Butterfly valves.

In the event of any conflict between provision of this specification and the documents listed above, this specification shall govern.

4.0 DESIGN REQUIREMENTS:

4.1 The butterfly valves shall be of short body, double flanged, minimum double offset seat design and either eccentric or a concentric disc configuration type, with shaft suitable for mounting either in horizontal or vertical position. The design should ensure bubble tight shut off at the design pressure as indicated in the Datasheet-A. Flanges shall be as per ASME B 16.5

4.2 Valve shall be designed as per AWWA C504 along with ASME Section III NC and ASME Section III ND with seismic category OBE or SSE as mentioned in this Datasheet-A of this specification and 'Valve Specification Sheet (VSS)' in Annexure-I.

4.3 All butterfly valves here are flanged valves and the flanges shall have diameter and drilling in accordance with ANSI B 16.5 or as specified in Annexure-I.

4.4 Valves shall be closing in clockwise direction wherever applicable.

4.5 All valves shall be furnished with vertical stems.

4.6 The design of valves shall ensure a streamlined passage and low pressure drop. The seats and discs shall be easily removable and / or shall be suited for easy re-facing and grinding. Valve disc should be of such a design as to keep the seats tights when valve body is

subjected to pipeline stresses, temperature changes and pressures. The thickness of the body for the steel valves shall be as per. ANSI B 16.34 or specification indicated in VSS for the pressure class specified. The valves shall be suitable for installation with the shaft in any position. The final orientation of the valves will be intimated to the supplier by NPCIL while reviewing the valve drawings. Packing materials should be suitable for the fluid handled and the valve design should facilitate easy replacement of packing.

4.7 Components and spare parts of valves shall be interchangeable among valves of one size, and elsewhere to the maximum practical extent.

4.8 The valves shall be capable of safe, proper and continuous operation under the specified conditions.

4.9 Bolts, nuts and gaskets shall conform to the material standards specified in the valve specification sheets. For stainless steel valves, the low alloy steel/carbon steel bolts and nuts shall be cadmium plated. Studs and screws for valves shall conform to the applicable Indian Standard except otherwise noted. All nuts and bolts have hexagonal heads, unless otherwise specified.

4.10 All external terminal pipe thread connections shall conform to IS: 554 unless. otherwise noted on specification sheets.

4.11 The valve design shall be such that the back face of the valve seats will not interfere with full tightening of the connection pipe to the valve.

4.12 The valves shall be capable of bidirectional bubble tight sealing.

4.13 The valves shall function smoothly without sticking, rubbing, vibrating or scouring in any position of the valve. Valve trim material shall be selected to avoid galling.

4.14 The valves shall be constructed essentially as described in the specification.

4.15 However, it is not intended that this specification limits the supplier in providing construction features resulting in more economic and functional valves as long as the features are equal to or better than described herein.

4.16 Provision shall be made for lifting heavy components by means of lugs, eye bolt or standard device of the manufacturer(s).

4.17 All carbon steel forgings shall be tested by magnetic particle test in accordance with ASTM E-109/138 and basis of acceptance shall be ASTM E-125.

4.18 All valves shall have permanent name plates indicating tag number and service for which they will be used and the pressure and temperature ratings.

4.19 All valves after assembly shall be operated from fully closed to fully open position several times to ensure that the valve required reasonable effort to operate manually.

4.20 Parts subjected to wear, corrosion, or other deterioration, requiring adjustment, inspection or repair shall be accessible and capable of reasonably convenient removal for repair/replacement when required and where applicable wearable parts shall have means of adjustment.

4.21 Trim material shall be as specified in the individual valve specification sheets. There shall be hardness difference of minimum 50 BRN between seat and disc/plug when the material of construction of both is same. The hardness of the trim material shall be BRN 250 (Rockwell 025) minimum. Wherever stellited face has been asked for, the hardness shall be BRN 350 (Rockwell C-30) minimum.

4.22 The features of construction shall generally conform to short body type. The valves shall be suitable for installation with the shaft in any position. The valves shall have blowout proof stem design feature to arrest the stem coming out of the disc during maintenance.

4.23 Valves shall be designed to ensure bubble tight shut off at the design pressure. The valve body flanges shall be dimensional and drilled as per AWWA C-207 (flat face flanges) or as specified in the valve specification sheets.

4.24 All valves shall be suitable for the service conditions i.e. flow, temperature and pressure under which they are required to operate and those performing similar duties shall be interchangeable with each other unless otherwise specified.

4.25 The sea water parameters of working medium handled by the valves are follows.

a. Seawater nominal temperature 31°C
b. Seawater minimal temperature 21 °C
c. Possible seawater maximal temperature 60 °C
d. Maximum Particle/ Debris Size, 20 mm
e. Specific electric conductivity 2000 µS/cm
f. Seawater will be added with sodium hypochlorite continuously with concentration of 1.0 g/m3 and periodically with four times a day within 15 min with concentration of 10.0 g/m3.

4.26 Design of Butterfly check valves, materials used and manufacture quality shall provide the following reliability parameters.

a. Average lifetime between overhauls, years, not less than 10
b. Operable state restoration time, hours, not more than 30
c. Service lifetime, years 30
d. Mean time to failure, hours, not less than 10000

4.27 The butterfly valves shall be suitable for indoor/outdoor installation with shaft either in horizontal or vertical position orientation, upstream or downstream of elbows or reducer.

4.28 Stem should not come in contact with the working fluid.

4.29 The valve shall be provided with a mechanical position indicator and a scale to indicate 'open', 'close' or intermediate positions of the disc. A positive stopper arrangement shall also be provided at the two extreme positions (open & close).

4.30 Integral position indicator on the stem and top mounting flanges for disc position identification shall be provided.

4.31 Each butterfly valve shall be provided with a hand wheel/handle for manual operation. Adjustable mechanical stop limiting device shall be provided to prevent overtravel of the valve disc in 'open' and 'closed' position shall be provided with each valve. For sizes 200NB and above, valves shall be gear operated. Gear Box shall be POD tested as per AWWA C504.

4.32 Valves shall maintain their operability, strength, leak tightness and fulfil their functions before, during and after Safe shutdown earthquake (SSE) & Operating basis earthquake (OBE). Procedure of seismic analysis for valves is attached in Annexure-III. Bidder to follow relevant clauses for the same. The floor response spectra under seismic load of SSE and OBE level for different buildings and floor elevation are given in Annexure – II. Name of building in which valve is located is mentioned in Datasheet-A. The specific location of these valves within the building is shown in the drawings attached as Annexure-IV.

4.33 Finite element modeling is to be done which shall be submitted for approval from BHEL/NPCIL before proceeding for further analysis. The assumptions made in the finite element idealization with justifications shall be brought out in the report and all the inputs used in the data preparation shall be from authenticated documents and shall be referred and attached with the report analysis

4.34 Vendor to furnish the performance certificate for minimum of 2 years of satisfactory operation for seal offered.

4.35 List of NPCIL approved material testing facilities and welding electrodes / wire & wire flux, as applicable is attached as Annexure V.

4.36 The credentials of furnace / castings and forgings shall be furnished by bidder for review and approval by customer / BHEL. Credentials of sub-vendors for the same are to be submitted along with the offers.

4.37 Chemical composition of water:

Sl. No	Element	Unit	Value
1	Calcium	mg/l	360-420
2	Magnesium	mg/l	1248-1322
3	Sodium	mg/l	7500-8500
4	Potassium	mg/l	390-415
5	Hydrocarbonates	mg/l	73.2-109.8
6	Carbonates	mg/l	67.2-76.8
7	Sulphates	mg/l	2709-2761
8	Chlorides	mg/l	19500
9	General Salt content	%	3.6
10	Water Hardness	mg/l	6500
11	pH value		8
12	Insoluble matters	mg/l	20
13	Biological assay data	mg/100cub.m	70

5.0 MATERIAL:

5.1 The materials of construction of main parts of the butterfly valves shall be specified in Data sheet-A and Valve Specification Sheet (VSS) in Annexure-I.

5.2 The materials of construction of the remaining parts shall be as per relevant standard governing the valves and to suit the service conditions. These materials shall be subject to approval of the purchaser.

5.3 Materials used in manufacture of valves shall be of tested quality.

5.4 Material of valve insert/rubber coating shall be resistant against seawater added with sodium hypochlorite with 1 g/m3 concentration in supplied water volume.

5.5 The materials of construction as indicated in VSS are the minimum acceptable. The bidder may offer equivalent or better materials.

6.0 CONSTRUCTION FEATURES

6.1 Valve Body:

i. The valve body shall have integral flanges (for flanged type valve) and hubs for shaft bearing housing (for AWWA standard valves). The minimum body shell thickness and minimum diameter of seat bore shall be as per the requirement of the applicable table of AWWA-C504.

ii. An arrow shall be embossed/ engraved and painted on outside of body to clearly indicate the direction of flow.

6.2 Valve Shaft:

i. The shaft of each butterfly valve shall be securely attached to the disc through Bolting, Riveting, threading, upsetting or cross pinning, adequately locked.

ii. Valve shaft design shall consist of one piece unit extending completely through the valve disc. or may be the “Stub Shaft” type which consists of two separate shafts inserted into the disc. Each stub shaft shall be inserted into the valve disc hubs for a minimum distance of at least 1.5 times shaft diameter. The connection between the shaft and the disc shall be designed to transmit shaft torque equivalent to at least 75% of the torsional strength of the minimum required shaft diameter. The minimum shaft diameter shall be as per AWWA C504 and shall be such that it will safely sustain the maximum differential pressure across the closed valve and transmit the maximum torque required to operate the valve. Calculations to be submitted to BHEL for approval. Penetration into disc hubs with close tolerance fit and secured with adequate number and capacity lock pins.

iii. Surface finish for shaft shall be minimum 16 RMS in the area of gland packing.

6.3 Valve Disc:

The valve disc shall have no external ribs transverse to the flow and shall sustain full differential pressure across a closed valve disc without exceeding a working stress of one fifth of the tensile strength of the material used. The valve disc shall be designed to rotate 90° from full open to tight shut off position. The thickness of valve disc shall be designed as per applicable standard.

6.4 Body Seat & Disc Seal (Valve seat):

The soft seat shall be of replaceable type of suitable grade resilient material, adequately reinforced, securely attached to the disc or to the body, and shall be designed to provide bubble tight shut off under all operating conditions. The soft seat/ seal shall be attached by clamping ring, bolting or other suitable methods as per the standard design of the manufacturer, if not mentioned in VSS. All clamping rings, bolts/studs, nuts used shall be of stainless steel. The sealing ring on the disc shall be continuous type and easily replaceable. The mating seat surface accordingly shall be on valve body or disc and shall be of stainless

steel and securely attached to the body/disc by directly clamping, bolting or suitable methods. All clamps, retaining rings, nuts, screws / all hardware shall be of stainless steel.

6.5 Valve Bearing:
Each butterfly valve shall be fitted with sleeve type bearings contained in the hub of the valve body. The bearing shall be of self-lubricating type and the coefficient of friction of bearing material shall not exceed 0.25 when rubbing at the maximum bearing pressure. The housing for this bearing shall be rigidly attached to the valve body. Thrust bearings shall also be provided for vertical shaft installation. For valves of 350 NB and larger, the bearing should be capable of taking axial thrust also. The material of the bearing shall be self-lubricated type & low coefficient of friction and in accordance with the relevant standard.

6.6 Shaft Seal:
Wherever the shaft projects through the valve body for operation connection, a shaft seal shall be provided. Shaft seal shall be designed for use of Standard 'O' rings seals (minimum 2 nos. for each side for inner face & 2 nos. at outer face and they shall be contained in a removable corrosion resistant recess. Shaft seals shall be designed to allow its replacement without removal of the valve shaft. If gland packing is provided then gland & gland flange both shall be in two pieces construction for uniform tightening.

6.7 Nameplate:
Each valve shall be fitted with a circular Stainless steel 2mm thick nameplate indicating the valve Tag No., size and service description as given in Data sheet-A. All details shall be engraved 1 mm deep and filled with black enamel paint.

6.8 All valves shall be fitted with position indicators to indicate valves 'open' and 'shut' position.

6.9 The stops which limit the travel of any valve in the 'Open' or 'Shut' position shall be arranged exterior to the valve body.

6.10 All valves shall be closed by rotating the hand wheel in a clockwise direction when looking at the face of the hand wheel. The hand wheels of diameters 300mm or less shall be provided with handles for ease of operation. The puling force required on hand wheel rim shall not exceed 25 Kgf when operating the valve under full flow and operating pressure. The face of each hand wheel shall be clearly marked with the words 'Open' and 'Shut' with arrows adjacent to indicate the direction of rotation to which each refers.

6.11 Special attention shall be given to the operating mechanism (gear box) for large size valves (200 NB & above) in order that quick and easy operation is obtained and maintenance is kept to a minimum.

6.12 Eyebolts shall be provided where necessary to facilitate handling of heavy valves or part of valves.

6.13 All valves and accessories shall be designed for easy dismantling and maintenance.

6.14 Wherever practicable, heavy valves of total weight including actuator drive motor, etc. equal to or greater than 500 Kgs. shall be provided with suitable lugs to permit direct suspension by hanger rods or direct resting on bottom support, as applicable.

7.0 TESTING, INSPECTION AND QUALITY ASSURANCE

7.1 The items covered under this contract shall be subjected to inspection, testing and quality surveillance. The Inspection Agency shall, at all reasonable times have access to bidder's works, Quality Control records and all facilities as reasonably required for carrying out the inspection and testing efficiently, and these shall be provided by the bidder free of cost.

7.2 The Quality Plan enclosed with this specification specify minimum quality control requirement. During contract stage bidder shall furnish this Quality Plan duly signed & stamped for BHEL approval. Quality plans shall be approved by BHEL and customer. All inspection and testing shall be carried out by BHEL/ BHEL representative and customer (as applicable). In case inspection is by both BHEL and their customer, then the inspection can be carried out jointly or separately, which will be informed later. In case of the foreign bidder, inspection shall be carried out by reputed third party.

7.3 The charges for third party inspection (Lloyds, TUV or equivalent) for foreign bidders shall be included in the base price of the item by the bidder. This third party agency shall be approved by BHEL. Bidder to inform the same in the offer and mention the same in Quality Plan.

7.4 The supplier shall be responsible for and shall perform all inspection and tests specified herein to ensure that the material and workmanship conform to his tender and design drawings and to demonstrate that the valves supplied by him will perform as specified herein to the approval of NPCIL. All materials designated in accordance with ASTM standards shall be tested accordingly. Proof in the form of certified test reports or mill certificates that the required tests have been carried out at the source will be acceptable, but if these are not performed then the tests will be carried out by the Supplier.

7.5 The supplier shall provide inspection to establish and maintain quality of workmanship in his works and that of his sub-suppliers to ensure the mechanical accuracy of components, compliance with drawings, identity and acceptability of all material parts and equipment.

7.6 All components machined or fabricated from plate, sheet or stock, shall meet the material requirements of ASTM or material specification approved by NPCIL.

7.7 Non Destructive Examinations (NDE) shall be carried out in accordance with governing valve specification sheet (VSS) or standard.

7.8 All valve seats shall be tested for tightness in the following manner.

7.9 The valves shall be subjected to water pressure of maximum of3 kg/cm2 (g); the pressure shall then be increased to the maximum design pressure of the valve being tested. Then the pressure shall be increased to one and a half times the design pressure. Valves shall then be cracked open at the highest pressure to determine the tightness of the seat ring on the body

7.10 During the hydrostatic test of the shell, stem packing shall be tested as follows and shall meet the requirements stated herein.

7.11 The pressure on the valve shall first be raised to the maximum service pressure stated in the valve specification sheet. The packing gland shall be adjusted so that there is no visible leakage past the packing

7.12 The pressure on the valve shall then be raised to full hydrostatic test pressure to complete the shell and seat test. The packing gland shall be adjusted only if necessary to meet the following requirements.

7.13 The packing gland of valves with actuators shall be retested at the maximum service pressure stated on the Valve Specification Sheet. No visible leakage at the packing gland shall be permitted.

7.14 All valves hydrostatically tested shall be completely drained prior to dispatch.

7.15 Valves shall not be shipped until released, after shop examination by NPCIL' s inspection or unless the shop examination is waived by NPCIL. (Seller shall notify well in advance of date by which the valves will be ready for [mal inspection). Shop examination and inspection by NPCIL shall not relieve the supplier of his contractual responsibility to furnish valves in compliance with specification and meeting specified guarantees.

Note: There may be minor changes in quality plan depending on customer/consultant comments which will have to be accommodated by bidder at no extra cost.

8.0 P.O.D. Tests:

8.1 POD (Proof-of-design) Test as per AWWA C504 is required to be carried out for valves. In case the valve POD Test has been done earlier, only Test Report of POD test for same model/ type/size/ rating is required to be submitted for verification. If POD test for valves/gear box are required to be carried out than the bidders shall do so at their own cost. No extra charge on this account will be admissible to the bidders.

8.2 Gear Box shall be designed & tested in accordance with latest editions of AWWA C 504. Gear Box shall be designed to hold the valve disc in intermediate position between full open and full closed position without creeping or fluttering.

8.3 For valves designed and manufactured as per AWWA and BS, valve POD shall follow the guidelines of AWWA-C-504.

8.4 Gear box POD test: - Valve POD and gear box POD tests should be done separately. Gear box POD test shall be done as per the procedure described below or as per the procedure agreed between purchaser & bidder.

8.5 Gear box POD Test shall be carried out only at full rated torque of gear box, throughout the full cycle of testing i.e. at no point during each full cycle of testing; the applied torque should be less than the full rated torque of Gear Box. Refer Sketch below for Gear Box POD test set up. Dead weight and length of arm shall be so selected that the torque generated at point “C” and “B” shall in no case be less than the full rated torque of the gear box.

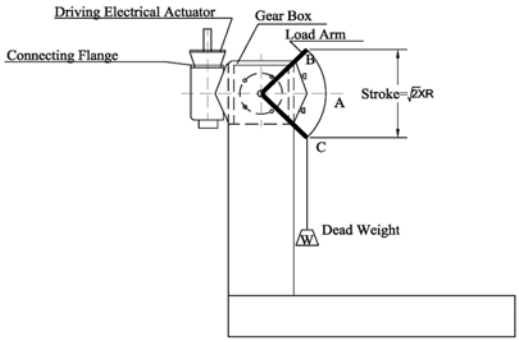

TEST SET UP

FIG. 1

9.0 PERFORMANCE GUARANTEE:

9.1 The bidder shall guarantee the material & workmanship of all components as well as operation of the equipment as per the requirements of the specification.

9.2 The bidder shall also guarantee for each of the butterfly valve for the following:

a. Minimum pressure drop

b. The valve opening and closing time as specified in specific requirements for electric operated valves.

10.0 EXCLUSIONS:

The following are excluded from the bidder's scope:

a) Counter flanges and their nuts and bolts.

b) Erection & Commissioning of equipment at site.

11.0 PAINTING AND POTECTION REQUIREMENT:

11.1 All valves shall be free of mill scale. The inside of all the valves shall be free of sand, dirt and other foreign matter. All openings shall be adequately sealed. Internally threaded pipe connections shall be plugged with a threaded metal plug.

11.2 All steel and cast iron surfaces shall be thoroughly cleaned to remove mill scales, rust etc. by wire brushing or grit blasting as required. All interior and exterior surfaces of valves shall be coated with two coats of Primer 75 micron dft. The exterior surfaces shall be further coated with top coat. The painting of external surfaces shall be carried out as per painting requirements specified in valve specification sheet (VSS). The paint applied shall be compatible for the medium handled by the valve and harsh saline environment. Outside surface of valve shall be coated with Copon Hycote 162HB, 1000 microns DFT.

11.3 A sack containing silica gel desiccant shall be firmly attached to the inner surface on the cover of one end of each valve.

11.4 For the valves having welded ends, the ends should be properly cleaned and treated with a suitable rust preventive other than grease and then securely fitted with plastic or wooden caps.

12.0 IDENTIFICATION AND MARING

12.1 The valve body and attached plate shall be marked with the information called for in MSS-SP. In addition, the supplier is required to affix a stainless steel metal tag to each valve with corrosion resistant wire The tag number shall be as shown in the individual

13.0 PACKING & SHIPMENT INSTRUCTIONS:

13.1 Each valve shall be drained, cleaned, prepared and suitably protected in such a way so as to minimize the possibility of damage and deterioration during transit and storage.

13.2 The valve shall be dispatched in total assembled form.

13.3 Discs of all valves shall be properly secured while dispatching so that there is no risk of damage to the disc & seat.

13.4 Body ends shall be suitably sealed to protect them against damage during transit and storage. The valves shall be so packed and protected as not to suffer corrosion, deterioration or damage of any sort during shipment to end storage at the project. All openings of the valves shall be closed with suitable plastic caps. Flanged openings shall be covered with a 20mm thick plywood blank flange held in place with 4 bolts and sealed with a blank gasket of natural rubber or equivalent.

13.5 A thin sheet steel circular blanking plate of a diameter 6mm less than the bolt holes inner P.C.D. shall be firmly fixed to the flange faces by the application of adhesive after first ensuring that the flange faces have been thoroughly degreased. A thin coat of adhesive shall be applied to the flange face and the blanking plate and then allowed to dry for 15-20 minutes. The coated face of the blanking plate should then be offered up to the face of the flange taking care that the plate is concentric with the flange. Firm pressure shall be applied to ensure intimate contact between plate and flange. A wooden blank should then be bolted to the flange using a minimum of 4 bolts.

13.6 Valve Tag Nos. shall be incorporated in all the dispatch documents.

13.7 All parts shall be properly packed, boxed, gated or otherwise protected for preventing any possible damage during transportation. Proper care shall be taken to avoid damage to the painted surface during transit

13.8 All the valves shall be packed suitably in wooden cases in order to avoid damage during transit and also during storage at site in tropical climate conditions for a period of 15-18 months. The packaging shall also include adequate cushioning, blocking, bracing, skidding, hoisting and the tie-down provisions. The packaging shall be subject to the approval of NPCIL.

13.9 Bidder to provide soft copy of photos/snaps of duly packed valve. The soft copies to be provided by bidder after final inspection of valves. Clearance of dispatch of valves will be given only after satisfactory packing condition of valves from bidders work. Packing Procedures shall be submitted for NPCIL's approval. All exposed surfaces shall be protected by fitting suitable wooden blank flanges so that they are not damaged during transportation. No shipment shall be done unless shipping release is issued by customer (NPCIL) in writing and for shipment.

14.0 SPARES

14.1 Commissioning spares: As mentioned in Datasheet-A.

14.2 Order for the spares may be placed simultaneously or otherwise at the option of purchaser.

14.3 Supplier shall also recommend other maintenance spares parts that may be considered for three years of operation

14.4 Supplier shall also furnish a list of mechanical tools necessary for maintenance.

15.0 DOCUMENTS TO BE SUBMITTED ALONG WITH OFFER

Bidder shall submit the following documents duly filled, signed and stamped along with the bid:

a. Compliance sheet
b. Unpriced bid
c. Documents as per the list indicated in the NIT.
d. List & credentials of foundries and furnaces used by bidder for approval from NPCIL.
e. Documentation for seismic testing as indicated in seismic procedure attached as Annexure-III.

The above are the only documents which will be used for technical evaluation unless other documents are asked for during technical clarifications. Any other technical document enclosed with the bid shall be ignored for the purpose of technical evaluation. All other documents attached with the specification are for information of the bidder and no comments shall be marked on these.

16.0 DATA TO BE SUBMITTED ON PLACEMENT OF ORDER

Category A:

a. Valve GA drawings
b. Quality Plan

Category B:

a. All test certificates, inspection reports as mentioned in QP after testing / inspection.
b. All material test certificates, NDT reports, Stress relief time charts
c. Welding procedure and Welders qualifications
d. All Performance test procedure and reports.
e. Documents / procedure / reports required for seismic qualification as per Annex-III
f. Proof of design (POD) test reports earlier carried out tests for butterfly valves, gear box. If the tests are not carried out earlier then suppler to furnish POD test procedure.

Documents in Category-A will be used for delay analysis.

SECTION-II

- **DATA SHEET – A**
- **QUALITY PLAN**
- **COMPLIANCE SHEET**

		DATA SHEET- A **BUTTERFLY VALVES (WATER SYSTEM)** **2X1000MWe KUDANKULAM NUCLEAR POWER PLANT**															SPECIFICATION NO. PE-TS-456-100-M008 SECTION II REV. NO.: 00 SHEET 1 OF 2				
1	2	3	4	5	6		7	8	9	10	11	12	13	14	15	16		17	18		
SL NO.	KKS NOS.	TYPE OF VALVE	SIZE mm (NB)	OPERATION	DESIGN		SERVICE	NUCLEAR SAFETY CLASS	SEISMIC CATEGORY	BUILDING / LOCATION	RATING, DESIGN & TESTING CODE	BODY & DISC MATERIAL	TRIM MATERIAL	END CONN	SPECIAL FEATURES	MATCHING PIPE OD X THKN		TOTAL MAIN VALVES QTY WITHOUT COMMISSIONING SPARES (BOTH UNITS) (NOS.)	COMMISIONING SPARES		
					PRESSURE KG/CM 2(G)	TEMP (DEG C)										MM	MM		BONNET COVER GASKETS (SETS)	GLAND PACKING (SETS)	DISC SEALS (SETS)
1	PUQ10AA103, PUQ20AA103, PUQ30AA103, PUQ40AA103, PUQ10AA104, PUQ20AA104, PUQ30AA104, PUQ40AA104	BFV	150	MANUAL	10	60	PUQ	4	II (OBE)	UQZ	AWWA C504-10	ASTM A216 Gr WCB	ASTM A 182 F 316L	ASME B16.5, SORF, CLASS 150	EPDM Body lining	180.0	16.4	16	16	16	16
2	PUQ10AA105, PUQ20AA105, PUQ30AA105, PUQ40AA105, PUQ10AA106, PUQ20AA106, PUQ30AA106, PUQ40AA106	BFV	200	MANUAL	10	60	PUQ	2	I (SSE)	UQZ	AWWA C504-10 & ASME SECTION III NC	ASTM A216 Gr WCB	ASTM A 182 F 316L	ASME B16.5, WNRF, CLASS 150	EPDM Body lining & GEAR OPERATED	219.1	7.0	16	16	16	16
3	PUQ10AA101, PUQ20AA101, PUQ30AA101, PUQ40AA101, PUQ10AA102, PUQ20AA102, PUQ30AA102, PUQ40AA102	BFV	80	MANUAL	10	60	PUQ	3	I (SSE)	UQZ	AWWA C504-10 & ASME SECTION III ND	ASTM A216 Gr WCB	ASTM A 182 F 316L	ASME B16.5, SORF, CLASS 150	EPDM Body lining	89.0	3.0	16	16	16	16
4	GML31AA101, GML32AA101, GML31AA108, GML32AA108, GML31AA201	BFV	80	MANUAL	10	60	GML	4	II (OBE)	UQA	AWWA C504-10	ASTM A216 Gr WCB	ASTM A 182 F 316L	ASME B16.5, SORF, CLASS 150	EPDM Body lining	90.0	8.2	10	10	10	10
																TOTAL		**58**	**58**	**58**	**58**

NOTES:-
1. Valve POD , Gear box POD & Actuator POD test, if already carried out by bidder for similar model/ type/ size/ rating for any NTPC/BHEL/REPUTED CUSTOMER project within the last 5 years from the date of bid submission as mentioned in NIT, shall be considered applicable if found satisfactory by BHEL/CUSTOMER.
2. Valve POD, Gear box POD test, if required, as per technical specification & AWWA C504-10/ AWWA C516-10, then the charges for the same shall deemed to be included in the unit quoted prices of main valves. Bidder shall not indicate these charges as a separate head in the price bids.
3. Valve to be designed as per AWWA C504, ASME B16.4, ASME Section III NC and ND along with sesimic design class of SSE and OBE wherever mentioned.
4. Hydrostatic testing will be as per API-598.
5. Main valve prices shall BE EXCLUSIVE of cost of Commissioning.
6. Bidder is required to quote unit price of each item under commissioning spares separately & individually i.e. prices of all commissioning spares shall not be clubbed/ included in the unit price of Main valves.
7. Bidder to quote separately for seismic test for each size.
8. Commissioning spares --> One set each of Bonet cover gasket, Gland packing, Disc seal.
10. ABBREVIATIONS:- BFV (WS)--- BUTTERFLY VALVES (WATER SYSTEM), MAN - MANUAL
OBE: OPERATING BASIS EARTHQUAKE, SSE: SAFE SHUTDOWN EARTHQUAKE
PUQ: DRAIN WATER REMOVAL SYSTEM, GML: WATER SUPPLY AND SEWERAGE SYSTEM
UQZ: ESSENTIAL LOADS PIPELINE TUNNELS, UQA: MAIN PUMP HOUSE

Signature of the bidder with name,designation,date and company's seal

Material of Construction

SERVICE: SEA WATER (PUQ AND GML SYSTEM)

SL. NO	PART NAME	MATERIAL
1	BODY (RAISED FACED FLANGED SHORT BODY)	ASTM A216 Gr. WCB with EPDM lining
2	DISC	DUCTILE IRON IS 1865Gr 500/7 with EPDM lining
3	BODY SEAT	ASTM A 182 F 316L
4	DISC SEAL	EPDM
5	SEAL RETANING RINGS	ASTM A 182 F 316L
6	INTERNAL BOLTS/ HARDWARES	A193 Gr B8M
7	EXTERNAL HARDWARES BOLTS AND NUTS	A193 Gr B8M
8	SHAFT	ASTM A 182 F 316L
9	SHAFT SEALS - (O' RING)	PTFE
10	GUIDE BUSH	ASTM A439 Gr.D2/ ASTM B62-85-5-5-5
11	BEARING	SLEEVE TYPE, SELF LUBRICATED
12	PACKING	PTFE
13	PACKING FOLLOWER/ PLATE	ASTM A 182 F 316L
14	THRUST PAD	ASTM A 182 F 316L
15	BOTTOM PLATE/ CAP	ASTM A 182 F 316L
16	BOTTOM GASKET/ 'O' RING	EPDM
17	GEARS (TOTALLY ENCLOSED)	STEEL TO IS: 2004 CL. 4 / EN8
18	HANDWHEEL/LEVER	CARBON STEEL

	MANUFACTURER/ BIDDER/ SUPPLIER NAME & ADDRESS	QUALITY PLAN		SPEC. NO: PE-SS-999-100-M008	DATE:
		CUSTOMER : NUCLEAR POWER CORPORATION OF INDIA		QP NO.: PE-QP-999-100-M020	DATE: 17.08.2020
		PROJECT: 2x1000MWe KUDANKULAM NPP		PO NO.:	DATE:
		ITEM: BUTTEFLY VALVES (WS)	SYSTEM: WATER SYSTEM	SECTION:	SHEET 1 OF 5

SL NO.	COMPONENT & OPERATIONS	CHARACTERISTICS	CLASS CATEGORY	TYPE OF CHECK	QUANTUM OF CHECK		REFERENCE DOCUMENT	ACCEPTANCE NORMS	FORMAT OF RECORD		AGENCY			CHP	REMARKS
1	2	3	4	5	6		7	8	9	*	**				
					M	C/ N				D	M	C	N		
1.0	**MATERIALS**														
1.1	BODY & DISC CASTING	1. PHYSICAL	MA	PHYSICAL TEST	ONE TEST BAR / HEAT	ONE TEST BAR / HEAT	Relevant material. Specification	Relevant material specification Specification	Material Test Certificate	√	P	W	V	#	Refer Note:1, 3
		2. CHEMICAL	MA	CHEMICAL TEST	ONE TEST BAR / HEAT	ONE TEST BAR / HEAT	Relevant material. Specification	Relevant material specification	Material Test Certificate	√	P	V	V	#	Refer Note:1
		3. VISUAL	MA	VISUAL	100%	-	MSS - SP- 55	No Defects	Inspection Report	√	P	V	V		
		4. SURFACE DEFECTS	MA	VISUAL	100%	-	Approved Procedure	Approved Procedure	Test Cert.	√	P	V	V		
			CR	MPI	100%	-	ASTM-E-709	Approved Procedure	Test Cert.	√	P	V	V		
			CR	DPT	100%	-	Approved Procedure	Approved Procedure	Test Cert.	√	P	V	V		
1.2	SHAFT	1. PHYSICAL	MA	PHYSICAL TEST	ONE TEST BAR / HEAT	ONE TEST BAR / HEAT	Relevant material specification	Relevant material specification	Material Test Certificate	√	P	W	V		Refer Note:1
		2. CHEMICAL	MA	CHEMICAL TEST	ONE TEST BAR / HEAT	-	Relevant material specification	Relevant material specification	Material Test Certificate	√	P	V	V		Refer Note:1
		3. VISUAL	MA	VISUAL	100%	-	MSS - SP- 55	No Defects	Inspection report	√	P	V	V		
		4. SURFACE DEFECTS	MA	VISUAL	100%	-	MSS - SP- 55	Approved Procedure	Test Cert.	√	P	V	V		
			CR	MPI	100%	-	ASTM-E-709	Approved Procedure	Test Cert.	√	P	V	V		
			CR	DPT	100%	-	ASTM-E-165	Approved Procedure	Test Cert.	√	P	V	V		
		5. U.T.(FOR SHAFT DIA >30mm)	MA	UTE	100%	Refer Note: 14	Approved Procedure	Approved Procedure	Test report	√	P	W	V		Refer Note:14
		6. IGC TEST ON S.S MATERIAL	MA	IGC	100%		Approved Procedure	AS PER ASTM A262 PR A/E	Test report	√	P	W	V	#	Refer Note:14

BHEL						BIDDER/ SUPPLIER		FOR CUSTOMER REVIEW & APPROVAL			
ENGINEERING			QUALITY			Sign & Date		Doc No:			
	Sign & Date	Name		Sign & Date	Name	Seal			Sign & Date	Name	Seal
Prepared by:		Prabhjyot Singh	Checked by:		K. K. Yadav			Reviewed by:			
Reviewed by:		Sanjay Kumar	Reviewed by:		RK Jaiswal			Approved by:			

	MANUFACTURER/ BIDDER/ SUPPLIER NAME & ADDRESS	QUALITY PLAN		SPEC. NO: PE-SS-999-100-M008	DATE:
		CUSTOMER : NUCLEAR POWER CORPORATION OF INDIA		QP NO.: PE-QP-999-100-M020	DATE: 17.08.2020
		PROJECT: 2x1000MWe KUDANKULAM NPP		PO NO.:	DATE:
		ITEM: BUTTEFLY VALVES (WS)	SYSTEM: WATER SYSTEM	SECTION:	SHEET 2 OF 5

SL NO.	COMPONENT & OPERATIONS	CHARACTERISTICS	CLASS CATEGORY	TYPE OF CHECK	QUANTUM OF CHECK		REFERENCE DOCUMENT	ACCEPTANCE NORMS	FORMAT OF RECORD		AGENCY			CHP	REMARKS
1	2	3	4	5	6		7	8	9	*	**				
					M	C/ N				D	M	C	N		
1.3	BODY SEAT RING & CLAMPING RING	1. PHYSICAL	MA	PHYSICAL TEST	ONE TEST BAR / HEAT	ONE TEST BAR / HEAT	Relevant material specification	Relevant material specification	Material Test Certificate	√	P	W	V		Refer Note:1
		2. CHEMICAL	MA	CHEMICAL TEST	ONE TEST BAR / HEAT	-	Relevant material specification	Relevant material specification	Material Test Certificate	√	P	V	V		Refer Note:1
		3. VISUAL	MA	VISUAL	100%	-	MSS - SP- 55	MSS - SP- 55	Inspection report	√	P	V	V		
1.4	GEAR BOX AND ACTUATOR	1. MATERIAL CONFORMANCE	MA	VERIFICATION OF TC	100%	-	As per Drawing / Rel. Standard	As per Drawing / Rel. Standard	Test certificate	√	P	V	V		
		2. GEAR BOX POD (LIFE CYCLE TEST)	MA	LIFE CYCLE TEST	ONE / TYPE/ SIZE/ RATED TORQUE	Refer Note: 16	Approved procedure / AWWA C504 Cl.4.5.8.5.9	Approved procedure / AWWA C504 Cl.4.5.8.5.9	Test Certificate	√	P	V	V		
1.5	FASTENERS	1. PHYSICAL	MA	PHYSICAL TEST	ONE TEST BAR / HEAT	ONE TEST BAR / HEAT	Relevant material specification	Relevant material specification	Material Test Certificate	√	P	W	V		Refer Note:1
		2. CHEMICAL	MA	CHEMICAL TEST	ONE TEST/ HEAT/SIZE /LOT	-	Relevant material specification	Relevant material specification	Material Test Certificate	√	P	V	V		Refer Note:1
		3. VISUAL & DIMENSIONS	MA	VISUAL & MEASUREMENT	RANDOM	-	As per Drawing	As per Drawing	Inspection report	√	P	V	V		
1.6	GASKETS	1. MATERIAL CONFORMANCE & VISUAL INSPECTION	MA	VISUAL	100%	-	As per Drawing / Rel. Standard	As per Drawing / Rel. Standard	Inspection report	√	P	V	V		
2.0	**IN-PROCESS**														
2.1	BODY, DISC, SHAFT MACHINING	1. DIMENSIONS	MA	MEASUREMENT	100%	-	Manufacturing drawing	Manufacturing drawing	Log book / register	√	P	V	V		
2.2	SHAFT	1. SURFACE DEFECTS	MA	D. P. TEST	100%	Refer Note: 14	ASTM-E-165	Approved Procedure	Test Report	√	P	W	W		
2.3	SEAT RING & DISC	1. HARDNESS	MA	HARDNESS	ONE TEST BAR /	ONE TEST	As per drawing / Rel. Standard	As per drawing / Rel. Standard	Test Certificate	√	P	W	V		

BHEL						BIDDER/ SUPPLIER		FOR CUSTOMER REVIEW & APPROVAL			
ENGINEERING			QUALITY			Sign & Date		Doc No:			
	Sign & Date	Name		Sign & Date	Name	Seal			Sign & Date	Name	Seal
Prepared by:		Prabhjyot Singh	Checked by:		K. K. Yadav			Reviewed by:			
Reviewed by:		Sanjay Kumar	Reviewed by:		RK Jaiswal			Approved by:			

	MANUFACTURER/ BIDDER/ SUPPLIER NAME & ADDRESS	QUALITY PLAN		SPEC. NO: PE-SS-999-100-M008	DATE:
		CUSTOMER : NUCLEAR POWER CORPORATION OF INDIA		QP NO.: PE-QP-999-100-M020	DATE: 17.08.2020
		PROJECT: 2x1000MWe KUDANKULAM NPP		PO NO.:	DATE:
		ITEM: BUTTEFLY VALVES (WS)	SYSTEM: WATER SYSTEM	SECTION:	SHEET 3 OF 5

SL NO.	COMPONENT & OPERATIONS	CHARACTERISTICS	CLASS CATEGORY	TYPE OF CHECK	QUANTUM OF CHECK		REFERENCE DOCUMENT	ACCEPTANCE NORMS	FORMAT OF RECORD		AGENCY			CHP	REMARKS
1	2	3	4	5	6		7	8	9	*	**				
					M	C/ N				D	M	C	N		
					HEAT	BAR / HEAT			/Lab report						
2.4	VULCANIZING	TEMP, PRESSURE & TIME	MA	MEASUREMENT	REGULAR INTERVALS	-	Mfg. Procedure	Mfg. Procedure	Process records	√	P	V	V		
2.5	VULCANIZED AND RUBBER LINED ITEMS	ADHESION, DEFECTS, THICKNESS	MA	VISUAL TEST, MEASUREMENT	1 / BATCH	-	IS 4682 Pt.1 and Approved GA	IS 4682 Pt.1 and Approved GA	Inspection report	√	P	V	V		TO BE DONE ON A MOCKUP PIECE ON SAME MATERIAL TOGETHER WITH VULANIZED JOB
		HARDNESS		SHORE 'A'	100%	-	IS 4682 Pt.1 and Approved GA	IS 4682 Pt.1 and Approved GA	Inspection report	√	P	V	V		
3.0	**TESTING**														
3.1	PROOF OF DESIGN	1. DISC STRENGTH TEST	MA	HYDRO TEST	ONE / TYPE/ SIZE/ CLASS	Refer Note. 16	AWWA C504 CL5.1.4	AWWA C504 CL5.1.4 / ASME B 16.34	Test certificate	√	P	W	V		Refer Note: 16
		2. LIFE CYCLE TESTING	MA	HYDRO TEST	ONE / TYPE/ CLASS/ SIZE GROUP		AWWA C504 CL5.1.4	AWWA C504 CL5.1.4 / ASME B 16.34	Test certificate	√	P	W	V		Refer Note: 16
3.2	SEISMIC TEST	1. ANALYSIS	MA	CALCULATION / FEM	ONE / TYPE/ CLASS/ SIZE GROUP	ONE / TYPE/ CLASS/ SIZE GROUP	Procedure as per Annex.III(5)	Procedure as per Annex. III(5)	Test Report	√	P	V	V		
		2. EXPERIMENT	MA	SHAKE TABLE TEST			Procedure as per Annex. III(5)	Procedure as per Annex. III(5)	Test Report	√	P	W	V		Refer Note: 14
4.0	**FINAL INSPECTION**														
4.1	FINAL INSPECTION	1. BODY HYDROSTATIC TEST	MA	INTEGRITY	100%	Refer Note: 14	API-598	API-598	Test Report	√	P	W	W	#	Refer Note:14
4.2		2.SEAT	MA	INTEGRITY	100%		API-598	API-598	Test Report	√	P	W	W	#	

BHEL						BIDDER/ SUPPLIER		FOR CUSTOMER REVIEW & APPROVAL			
ENGINEERING			QUALITY			Sign & Date		Doc No:			
	Sign & Date	Name		Sign & Date	Name	Seal			Sign & Date	Name	Seal
Prepared by:		Prabhjyot Singh	Checked by:		K. K. Yadav			Reviewed by:			
Reviewed by:		Sanjay Kumar	Reviewed by:		RK Jaiswal			Approved by:			

SL NO.	COMPONENT & OPERATIONS	CHARACTERISTICS	CLASS CATEGORY	TYPE OF CHECK	QUANTUM OF CHECK		REFERENCE DOCUMENT	ACCEPTANCE NORMS	FORMAT OF RECORD		AGENCY			CHP	REMARKS
1	2	3	4	5	6		7	8	9	*	**				
					M	C/ N				D	M	C	N		
	FINAL INSPECTION (contd.)	HYDROSTATIC TEST				Refer Remarks									
4.3		3. SEAT AIR TEST	MA	INTEGRITY	100%		API-598	API-598	Test Report	√	P	W	W	#	
4.4		4. DIMENSIONAL & VISUAL INSPECTION	MA	Overall dimensions	100%		Approved drawing	As per approved drawing	Test Report	√	P	W	W		100% Witness by BHEL & Customer
4.5		5. PAINTING & CORROSION PROTECTIION, ADHESION TEST	MA	Visual & paint thickness	100%		Approved drawing / Rel. Standard	Approved drawing / Rel. Standard	Test Report	√	P	W	W		
4.6		6 PACKING (WITH END PROTECTION)	MA	Visual	100%		Manufacturer's standard	Manufacturer's standard	Packing list	√	P	W	V		100% Witness by BHEL
4.7		7. DOCUMENTATION	MA	Review	100%	-	Approved drawing / Quality Plan	Approved drawing / Quality Plan	History documents & instruction manual	√	P	V	V		

NOTES:

1. Co-related original material test certificate is acceptable. In absence of co-related original material certificate, sample lot (lot means all material having same heat mark/make specification requirements) for physical and chemical tests shall be drawn and witness by BHEL. Chemical and physical test shall be carried out in NPCIL approved labs only and BHEL Quality representative / TPIA will witness physical tests. BHEL representative / TPIA will submit all test reports as per material specification to NPCIL Quality for checking, verification for clearance. Customer Hold Point is in review and clearance. Stamping of raw material and stamp shall be done by BHEL representative / TPIA. NPCIL / BHEL reserves the right to physically verify such activities by surprise visits and by retesting material at NPCIL's cost. In case the test results are not in line with TC submitted / material specification, the cost will have to be borne by Supplier.
2. Welding procedure and welder performance qualification shall be witnessed by BHEL / TPIA and report along with test results will be sent to NPCIL for review. NPCIL representative shall witness welder procedure cum performance qualification on at least one welder based on each approved welding procedure specification. If the sample of procedure cum performance qualification witness by NPCIL representative fails to meet the required specified for procedure and welder qualification, then re-qualification of all welders will be carried out in presence of NPCIL / BHEL.
3. First heat/lot of pouring to be witnessed by BHEL and mechanical tests for all heat will be witnessed by BHEL.
4. Random check of LPE on final pass of weld joints by NPCIL as 'Witness'. LPE other than welds, NPCIL will witness on 100% basis if no sample size is mentioned in QAP.

BHEL						BIDDER/ SUPPLIER		FOR CUSTOMER REVIEW & APPROVAL			
ENGINEERING			QUALITY			Sign & Date		Doc No:			
	Sign & Date	Name		Sign & Date	Name	Seal			Sign & Date	Name	Seal
Prepared by:		Prabhjyot Singh	Checked by:		K. K. Yadav			Reviewed by:			
Reviewed by:		Sanjay Kumar	Reviewed by:		RK Jaiswal			Approved by:			

SL NO.	COMPONENT & OPERATIONS	CHARACTERISTICS	CLASS CATEGORY	TYPE OF CHECK	QUANTUM OF CHECK		REFERENCE DOCUMENT	ACCEPTANCE NORMS	FORMAT OF RECORD		AGENCY			CHP	REMARKS
1	2	3	4	5	6		7	8	9	*	**				
					M	C/ N				D	M	C	N		

5. All test reports, test certificates, and inspection reports shall be reviewed by Manufacturer before submitting the same for verification by Purchaser.
6. Chemical and mechanical tests on material shall be performed in laboratories approved by NPCIL.
7. Credentials of Foundries for castings / forgings to be submitted by bidders for approval by NPCIL/BHEL.
8. Credentials of Furnaces for carrying out heat treatment to be submitted by bidders for approval by NPCIL/BHEL
9. Calibrated instruments shall be used during inspection, examination and testing.
10. NPCIL approved chemicals for liquid penetrate examination shall be used.
11. Non-destructive examination shall be carried out by personnel qualified to Level-II of INST or ASNT
12. Electrodes / Filler wire shall be of brand approved by NPCIL. Batch testing electrode is required if specified in applicable specification.
13. In case of foreign supplier, all test certificates shall be furnished by the supplier, duly witnessed/verified by supplier's TPI.
14. 10% or min. 2 nos. for each type, size & rating at random by Customer & 100% by BHEL & supplier. For type tests, 10% or min. 2 nos. for each type, size & rating at random.
15. Following to be noted for packing:
    a. Material shall be packed suitably in order to avoid damage of paint and valve during transit and also during storage at site in tropical climate conditions for a period of 15-18 months.
    b. Photographs of the packing just before dispatch for information of PEM.
16. POD (Life Cycle test): Verification of Test Report On Gear Box Earlier Carried Out for NPCIL Project / Reputed Customer.
    Verification of test reports of pod test on same model/type/size/rating carried out earlier for any BHEL/NTPC/reputed customer project within the last 5 years from the date of bid submission date as mentioned in NIT.
17. The latest revisions/year of issue of all the standard indicated in the QP shall be referred.
18. List of NPCIL approved material testing facilities and welding electrodes / wire & wire flux, as applicable is attached as Annexure V.
19. BHEL reserves the right for conducting repeat test, if required.

LEGENDS:

*RECORDS, INDENTIFIED WITH "TICK"(√) SHALL BE ESSENTIALLY INCLUDED BY SUPPLIER IN QA DOCUMENTATION,

** **M**: SUPPLIER/ MANUFACTURER/ SUB-SUPPLIER, **C**: MAIN SUPPLIER/ BHEL/ THIRD PARTY INSPECTION AGENCY (TPIA), **N**: CUSTOMER,
P: PERFORM, **W**: WITNESS, **V:** VERIFICATION, AS APPROPRIATE, **D**: DOCUMENTATION

MA: MAJOR **CR:** CRITICAL **CHP:** CUSTOMER HOLD POINT – Marked as '#'.

BHEL						BIDDER/ SUPPLIER		FOR CUSTOMER REVIEW & APPROVAL			
ENGINEERING			QUALITY			Sign & Date		Doc No:			
	Sign & Date	Name		Sign & Date	Name	Seal			Sign & Date	Name	Seal
Prepared by:		Prabhjyot Singh	Checked by:		K. K. Yadav			Reviewed by:			
Reviewed by:		Sanjay Kumar	Reviewed by:		RK Jaiswal			Approved by:			

A. I hereby comply/not comply (*) to all the requirements of this technical specification in totality.

- **In case the bidder does not comply to the technical specification, the deviations shall be explicitly listed in the technical deviation sheet of GCC. Deviations listed in technical deviation sheet shall only be considered.**

Name of Bidder / Authorized Representative :- _ _ _ _ _ _ _ _ _ _ _ _ _ _

Designation :- _ _ _ _ _ _ _ _ _ _ _ _ _ _

Signature:- _ _ _ _ _ _ _ _ _ _ _ _ _ _

Company Seal :- _ _ _ _ _ _ _ _ _ _ _ _ _ _

Date :- _ _ _ _ _ _ _ _ _ _ _ _ _ _

ANNEXURE – I

TYPICAL VALVE SPECIFICATION SHEETS
VALVE SPECIFICATION SHEET FOR GML & PUQ SYSTEM

200 NB BUTTERFLY VALVE OF PUQ SYSTEM

GENERAL				VALVE SPEC. SH.NO.: I02.KK34.0.0.TH.TS.PR006		
	VALVE	Double Flanged Type Butterfly Valve		KKS CODE: 3,4 PUQ10/20/30/40 AA105/106		
	SIZE	**200 NB**		REV. NO.		
	APPL. SPECN.					
	DESIGN.	ASME B16.34 and ASME Section III NC		ENV.QUAL.REQUIREMENT	:	NA
	LOCATION			SEISMIC REQUIREMENT	:	SSE

BODY	PRESSURE RATING	:	CLASS 150			
	END CONNECTION	:	FLANGED TO B16.5, RF, SERRATED FINISH, FACE TO FACE DIMENSIONS AS PER B16.10			
	MATERIAL: BODY	:	ASTM A216 Gr. WCB	LINING	:	EPDM (TOTAL WETTED SURFACE SHALL BE FULLY LINED)
	BOLTS	:	A 193 Gr B8M	NUTS	:	A 194 Gr 8M
	CONSTRUCTION FEATURES	:				
	HAND WHEEL	:	REQUIRED	MATERIAL	:	CS
	SHAFT SEAL	:		MATERIAL	:	PTFE
	SHAFT BEARING	:		MATERIAL	:	
TRIM	SHAFT	:		MATERIAL	:	A473 TYPE 316
	DISC	:	Single Forged Piece With EPDM Lining	MATERIAL	:	Ductile iron IS 1865 GR 500/7 with EPDM lining
	SEAT ON BODY/DISC	:	EPDM SEAT	MATERIAL	:	EPDM
	TAPER PIN	:		MATERIAL	:	SS316
	DISC POSITION IDENTIFICATION	:	REQUIRED	MATERIAL	:	

SERV CON	FLUID	:	SEA WATER				Max.	Min.
	PRESSURE(kg/cm² g)	:	DESIGN	10	OPERATING			
	TEMP (ºC)	:	MAX.	60	MIN.	21	NORMAL	31
	FLOW (m³/hr)	:	MAX.		MIN.		NORMAL	
	DENS.(kg/m³) @ 15 ºC	:	1000					
	Hydraulic friction factor	:	Not more than 1.0					
	DISC DIFFERENTIAL PRESSURE (kg/cm² g)		SAME AS VALVE RATING					
	Cv	:	#					

NOTES :
1. VENDOR TO INDICATE VALUES FOR ITEMS MARKED (#) THUS.
2. MANUFACTURER TO SUBMIT QAPAND OBTAIN NPC'S APPROVAL BEFORE MANUFACTURING.
3. OUTSIDE SURFACE OF THE VALVE SHALL BE COATED WITH COPON HYCOTE 162HB, 1000 MICRONS DFT.
4. MOVEMENT OF DISC SHALL BE ACCOMODATED WITHIN THE FLANGES OF THE VALVE.

	DESCRIPTION	PRESSURE (kg/cm² g)	DURATION IN (min.) (MIN)	APPLICABLE CLAUSE OF SPECIFICATION	REMARKS
INSP TESTS	HYDROSTATIC SEAT/DISC (BI-DIRECTIONAL) TEST	22	5	DROP TIGHT	NPC TO WITNESS TESTS AS PER APPROVED QAP
	HYDROSTATIC BODY TEST	30	10		
	AIR LEAK SEAT TEST	5.5	3	BUBBLE TIGHT	
	DISC STRENGTH AS DESIGN PROOF TEST	30	10		TYPE TEST ON ONE VALVE ONLY, OTHERWISE TEST CERTIFICATE TO BE FURNISHED
	VALVE & ACTUATURPERFORMANCE TEST	REQUIRED			
	ACTUATOR TEST	NA			
	FUNCTIONAL QUALIFICATION TEST	NA			
	MATERIAL	PHYSICAL & CHEMICAL T.C. FROM MFG.			
	DIMENSIONAL CHECKS	MFG. CERTIFICATES & SAMPLE CHECK BY NPC			

ACCESSORIES	ACCESSORIES	NOT APPLICABLE			APPLICABLE	
	LIMIT SWITCHES	OPEN		CLOSE		
	CHAIN WHEEL	NA			FLOOR STAND :	
	EXTN. BONNET	NA			SUPPORT LUGS :	
	FLANGES	Mating Flanges as per B16.5, WNRF, Class 150			OTHERS :	

NOTES :

1. VENDOR TO INDICATE VALUES FOR ITEMS MARKED (#)
2. MANUFACTURER TO SUBMIT QAP & OBTAIN NPC'S APPROVAL BEFORE MANUFACTURING.
3. TESTING SHALL BE AS PER API 598.
4. VALVE SHALL BE CAPABLE OF BI-DIRECTIONAL BUBBLE TIGHT SEALING.
5. VALVES SHOULD BE ABLE TO PERFORM WHEN DRIVE SHAFT & DISC ARE IN VERTICAL AND HORIZONTAL ORIENTATION, UPSTREAM OR DOWNSTREAM OF ELBOWS AND PIPE REDUCER.
6. STEM SHOULD NOT COME IN CONTACT WITH FLOWING FLUID (i.e. IT SHOULD REMAIN DRY).
7. INTEGRAL POSITION INDICATOR ON THE STEM AND TOP MOUNTING FLANGES FOR DISC POSITION IDENTIFICATION SHALL BE PROVIDED.
8. VALVE SHALL HAVE BLOW OUT PROOF STEM DESIGN FEATURE TO ARREST STEM COMING OUT FROM DISC DURING MAINTENANCE
9. HIGH STRENGTH STUB SHAFT SHALL BE PROVIDED WITH MINIMUM 1.5 TIMES DIA. PENETRATION INTO DISC HUBS WITH CLOSE TOLERANCE FIT AND SECURED WITH ADEQUATE NUMBER AND CAPACITY LOCK PINS.
10. SHAFT DIAMETER SELECTION, SHAFT TO DISC CONNECTION, PIN SIZING, OPERATOR SIZING SHALL BE IN-LINE WITH AWWA-C 504. CALCULATIONS TO BE SUBMITTED FOR PURCHASERS APPROVAL.
11. VENDOR SHOULD FURNISH THE PERFORMANCE CERTIFICATE FOR MINIMUM 2 YEARS OF SATISFACTORY OPERATION FOR SEAL OFFERED.
12. OUTSIDE SURFACE OF THE VALVE SHALL BE COATED WITH COPON HYCOTE 162HB, 1000 MICRONS DFT.

150 NB BUTTERFLY VALVE OF PUQ SYSTEM

GENERAL				VALVE SPEC. SH.NO.: I02.KK34.0.0.TH.TS.PR006 KKS CODE: 3, 4 PUQ10/20/30/40 AA103/104 :		
	VALVE	Double Flanged Type Butterfly Valve				
	SIZE	**150 NB**				
	APPL. SPECN.			REV. NO.		
	DESIGN.	ASME B16.34		ENV.QUAL.REQUIREMENT	:	NA
	LOCATION			SEISMIC REQUIREMENT	:	OBE

BODY	PRESSURE RATING	:	CLASS 150			
	END CONNECTION	:	FLANGED TO B16.5, RF, SERRATED FINISH, FACE TO FACE DIMENSIONS AS PER B16.10			
	MATERIAL: BODY	:	ASTM A216 Gr. WCB	LINING	:	EPDM (TOTAL WETTED SURFACE SHALL BE FULLY LINED)
	BOLTS	:	A 193 Gr B8M	NUTS	:	A 194 Gr 8M
	CONSTRUCTION FEATURES	:				
	HAND WHEEL	:	REQUIRED	MATERIAL	:	CS
	SHAFT SEAL	:		MATERIAL	:	PTFE
	SHAFT BEARING	:		MATERIAL	:	

TRIM	SHAFT	:		MATERIAL	:	A473 TYPE 316
	DISC	:	Single Forged Piece With EPDM Lining	MATERIAL	:	Ductile iron IS 1865 GR 500/7 with EPDM lining
	SEAT ON BODY/DISC	:	EPDM SEAT	MATERIAL	:	EPDM
	TAPER PIN	:		MATERIAL	:	SS316
	DISC POSITION	:	REQUIRED	MATERIAL	:	

SERV CON	FLUID	:	SEA WATER			Max.	Min.	
	PRESSURE(kg/cm² g)	:	DESIGN	10	OPERATING			NOTES :
	TEMP (ºC)	: MAX.	60	MIN.	21	NORMAL	31	1. VENDOR TO INDICATE VALUES FOR ITEMS MARKED (#) THUS.
	FLOW (m³/hr)	: MAX.		MIN.		NORMAL		2. MANUFACTURER TO SUBMIT QAPAND OBTAIN NPC'S APPROVAL BEFORE MANUFACTURING.
	DENS.(kg/m³) @ 15 ºC	:	1000					3. OUTSIDE SURFACE OF THE VALVE SHALL BE COATED WITH COPON HYCOTE 162HB, 1000 MICRONS DFT.
	Hydraulic friction factor	:	Not more than 1.0					4. MOVEMENT OF DISC SHALL BE ACCOMODATED WITHIN THE FLANGES OF THE VALVE.
	DISC DIFFERENTIAL PRESSURE (kg/cm² g)		SAME AS VALVE RATING					
	Cv	:	#					

INSP TESTS	DESCRIPTION	PRESSURE (kg/cm² g)	DURATION IN (min.) (MIN)	APPLICABLE CLAUSE OF SPECIFICATION	REMARKS
	HYDROSTATIC SEAT/DISC (BI-DIRECTIONAL) TEST	22	5	DROP TIGHT	NPC TO WITNESS TESTS AS PER APPROVED QAP
	HYDROSTATIC BODY TEST	30	10		
	AIR LEAK SEAT TEST	5.5	3	BUBBLE TIGHT	
	DISC STRENGTH AS DESIGN PROOF TEST	30	10		TYPE TEST ON ONE VALVE ONLY, OTHERWISE TEST CERTIFICATE TO BE FURNISHED
	VALVE & ACTUATURPERFORMANCE TEST	REQUIRED			
	ACTUATOR TEST	NA			
	FUNCTIONAL QUALIFICATION TEST	NA			
	MATERIAL	PHYSICAL & CHEMICAL T.C. FROM MFG.			
	DIMENSIONAL CHECKS	MFG. CERTIFICATES & SAMPLE CHECK BY NPC			

ACCESS	ACCESSORIES	NOT APPLICABLE			APPLICABLE	
	LIMIT SWITCHES	OPEN		CLOSE		
	CHAIN WHEEL	NA			FLOOR STAND:	

O R I E S	EXTN. BONNET	NA	SUPPORT LUGS :	
	FLANGES	Mating Flanges as per B16.5, SORF, Class 150	OTHERS :	

NOTES :

1. VENDOR TO INDICATE VALUES FOR ITEMS MARKED (#)
2. MANUFACTURER TO SUBMIT QAP & OBTAIN NPC'S APPROVAL BEFORE MANUFACTURING.
3. TESTING SHALL BE AS PER API 598.
4. VALVE SHALL BE CAPABLE OF BI-DIRECTIONAL BUBBLE TIGHT SEALING.
5. VALVES SHOULD BE ABLE TO PERFORM WHEN DRIVE SHAFT & DISC ARE IN VERTICAL AND HORIZONTAL ORIENTATION, UPSTREAM OR DOWNSTREAM OF ELBOWS AND PIPE REDUCER.
6. STEM SHOULD NOT COME IN CONTACT WITH FLOWING FLUID (i.e. IT SHOULD REMAIN DRY).
7. INTEGRAL POSITION INDICATOR ON THE STEM AND TOP MOUNTING FLANGES FOR DISC POSITION IDENTIFICATION SHALL BE PROVIDED.
8. VALVE SHALL HAVE BLOW OUT PROOF STEM DESIGN FEATURE TO ARREST STEM COMING OUT FROM DISC DURING MAINTENANCE
9. HIGH STRENGTH STUB SHAFT SHALL BE PROVIDED WITH MINIMUM 1.5 TIMES DIA. PENETRATION INTO DISC HUBS WITH CLOSE TOLERANCE FIT AND SECURED WITH ADEQUATE NUMBER AND CAPACITY LOCK PINS.
10. SHAFT DIAMETER SELECTION, SHAFT TO DISC CONNECTION, PIN SIZING, OPERATOR SIZING SHALL BE IN-LINE WITH AWWA-C 504. CALCULATIONS TO BE SUBMITTED FOR PURCHASERS APPROVAL.
11. VENDOR SHOULD FURNISH THE PERFORMANCE CERTIFICATE FOR MINIMUM 2 YEARS OF SATISFACTORY OPERATION FOR SEAL OFFERED.
12. OUTSIDE SURFACE OF THE VALVE SHALL BE COATED WITH COPON HYCOTE 162HB, 1000 MICRONS DFT.

80 NB BUTTERFLY VALVE OF PUQ SYSTEM

GENERAL				VALVE SPEC. SH.NO.: I02.KK34.0.0.TH.TS.PR006 KKS CODE: 3, 4 PUQ10/20/30/40AA101/102 3, 4 PUQ10/20/30/40AA201 REV. NO.		
	VALVE	Double Flanged Type Butterfly Valve				
	SIZE	**80 NB**				
	APPL. SPECN.					
	DESIGN.	ASME B16.34 and ASME Section III ND		ENV.QUAL.REQUIREMENT	:	NA
	LOCATION			SEISMIC REQUIREMENT	:	SSE

BODY	PRESSURE RATING	:	CLASS 150			
	END CONNECTION	:	FLANGED TO B16.5, RF, SERRATED FINISH, FACE TO FACE DIMENSIONS AS PER B16.10			
	MATERIAL: BODY	:	ASTM A 216 Gr. WCB	LINING	:	EPDM (TOTAL WETTED SURFACE SHALL BE FULLY LINED)
	BOLTS	:	A 193 Gr B8M	NUTS	:	A 194 Gr 8M
	CONSTRUCTION FEATURES	:				
	HAND WHEEL	:	REQUIRED	MATERIAL	:	CS
	SHAFT SEAL	:		MATERIAL	:	PTFE
	SHAFT BEARING	:		MATERIAL	:	
TRIM	SHAFT	:		MATERIAL	:	A473 TYPE 316
	DISC	:	Single Forged Piece With EPDM Lining	MATERIAL	:	Ductile iron IS 1865 GR 500/7 with EPDM lining
	SEAT ON BODY/DISC	:	EPDM SEAT	MATERIAL	:	EPDM
	TAPER PIN	:		MATERIAL	:	SS316
	DISC POSITION	:	REQUIRED	MATERIAL	:	

SERV CON	FLUID	:	SEA WATER				Max.	Min.
	PRESSURE(kg/cm² g)	:	DESIGN	10	OPERATING			
	TEMP (ºC)	:	MAX.	60	MIN.	21	NORMAL	31
	FLOW (m³/hr)	:	MAX.		MIN.		NORMAL	
	DENS.(kg/m³) @ 15 ºC	:	1000					
	Hydraulic friction factor	:	Not more than 1.0					
	DISC DIFFERENTIAL PRESSURE (kg/cm² g)		SAME AS VALVE RATING					
	Cv	:	#					

NOTES :
1. VENDOR TO INDICATE VALUES FOR ITEMS MARKED (#) THUS.
2. MANUFACTURER TO SUBMIT QAPAND OBTAIN NPC'S APPROVAL BEFORE MANUFACTURING.
3. OUTSIDE SURFACE OF THE VALVE SHALL BE COATED WITH COPON HYCOTE 162HB, 1000 MICRONS DFT.
4. MOVEMENT OF DISC SHALL BE ACCOMODATED WITHIN THE FLANGES OF THE VALVE.

	DESCRIPTION	PRESSURE (kg/cm² g)	DURATION IN (min.) (MIN)	APPLICABLE CLAUSE OF SPECIFICATION	REMARKS
INSP TESTS	HYDROSTATIC SEAT/DISC (BI-DIRECTIONAL) TEST	22	5	DROP TIGHT	NPC TO WITNESS TESTS AS PER APPROVED QAP
	HYDROSTATIC BODY TEST	30	10		
	AIR LEAK SEAT TEST	5.5	3	BUBBLE TIGHT	
	DISC STRENGTH AS DESIGN PROOF TEST	30	10		TYPE TEST ON ONE VALVE ONLY, OTHERWISE TEST CERTIFICATE TO BE FURNISHED
	VALVE & ACTUATURPERFORMANCE TEST	REQUIRED			
	ACTUATOR TEST	NA			
	FUNCTIONAL QUALIFICATION TEST	NA			
	MATERIAL	PHYSICAL & CHEMICAL T.C. FROM MFG.			
	DIMENSIONAL CHECKS	MFG. CERTIFICATES & SAMPLE CHECK BY NPC			

ACCESSO	ACCESSORIES				NOT APPLICABLE		APPLICABLE
	LIMIT SWITCHES	NA		CLOSE			
	CHAIN WHEEL	NA				FLOOR STAND :	

R I E S	EXTN. BONNET	NA	SUPPORT LUGS :	
	FLANGES	Mating Flanges as per B16.5, SORF, Class 150	OTHERS :	

NOTES :

1. VENDOR TO INDICATE VALUES FOR ITEMS MARKED (#)
2. MANUFACTURER TO SUBMIT QAP & OBTAIN NPC'S APPROVAL BEFORE MANUFACTURING.
3. TESTING SHALL BE AS PER API 598.
4. VALVE SHALL BE CAPABLE OF BI-DIRECTIONAL BUBBLE TIGHT SEALING.
5. VALVES SHOULD BE ABLE TO PERFORM WHEN DRIVE SHAFT & DISC ARE IN VERTICAL AND HORIZONTAL ORIENTATION, UPSTREAM OR DOWNSTREAM OF ELBOWS AND PIPE REDUCER.
6. STEM SHOULD NOT COME IN CONTACT WITH FLOWING FLUID (i.e. IT SHOULD REMAIN DRY).
7. INTEGRAL POSITION INDICATOR ON THE STEM AND TOP MOUNTING FLANGES FOR DISC POSITION IDENTIFICATION SHALL BE PROVIDED.
8. VALVE SHALL HAVE BLOW OUT PROOF STEM DESIGN FEATURE TO ARREST STEM COMING OUT FROM DISC DURING MAINTENANCE
9. HIGH STRENGTH STUB SHAFT SHALL BE PROVIDED WITH MINIMUM 1.5 TIMES DIA. PENETRATION INTO DISC HUBS WITH CLOSE TOLERANCE FIT AND SECURED WITH ADEQUATE NUMBER AND CAPACITY LOCK PINS.
10. SHAFT DIAMETER SELECTION, SHAFT TO DISC CONNECTION, PIN SIZING, OPERATOR SIZING SHALL BE IN-LINE WITH AWWA-C 504. CALCULATIONS TO BE SUBMITTED FOR PURCHASERS APPROVAL.
11. VENDOR SHOULD FURNISH THE PERFORMANCE CERTIFICATE FOR MINIMUM 2 YEARS OF SATISFACTORY OPERATION FOR SEAL OFFERED.
12. OUTSIDE SURFACE OF THE VALVE SHALL BE COATED WITH COPON HYCOTE 162HB, 1000 MICRONS DFT.

80 NB BUTTERFLY VALVE OF GML SYSTEM

GENERAL				VALVE SPEC. SH.NO.: I02.KK34.0.0.TH.TS.PR006 KKS CODE: 3,4 GML31/32AA101		
	VALVE	Double Flanged Type Butterfly Valve				
	SIZE	**80 NB**				
	APPL. SPECN.			REV. NO.		
	DESIGN.	ASME B16.34		ENV.QUAL.REQUIREMENT	:	NA
	LOCATION			SEISMIC REQUIREMENT	:	OBE

BODY	PRESSURE RATING	:	CLASS 150			
	END CONNECTION	:	FLANGED TO B16.5, RF, SERRATED FINISH, FACE TO FACE DIMENSIONS AS PER B16.10			
	MATERIAL: BODY	:	ASTM A 216 Gr. WCB	LINING	:	EPDM (TOTAL WETTED SURFACE SHALL BE FULLY LINED)
	BOLTS	:	A 193 Gr B8M	NUTS	:	A 194 Gr 8M
	CONSTRUCTION FEATURES	:				
	HAND WHEEL	:	REQUIRED	MATERIAL	:	CS
	SHAFT SEAL	:		MATERIAL	:	PTFE
	SHAFT BEARING	:		MATERIAL	:	

TRIM	SHAFT	:		MATERIAL	:	A473 TYPE 316
	DISC	:	Single Forged Piece With EPDM Lining	MATERIAL	:	Ductile iron IS 1865 GR 500/7 with EPDM lining
	SEAT ON BODY/DISC	:	EPDM SEAT	MATERIAL	:	EPDM
	TAPER PIN	:		MATERIAL	:	SS316
	DISC POSITION IDENTIFICATION	:	REQUIRED	MATERIAL	:	

SERVICON	FLUID	:	SEA WATER				Max.	Min.
	PRESSURE(kg/cm² g)	:	DESIGN	10	OPERATING			
	TEMP (ºC)	:	MAX.	60	MIN.	21	NORMAL	31
	FLOW (m³/hr)	:	MAX.		MIN.		NORMAL	
	DENS.(kg/m³) @ 15 ºC	:	1000					
	Hydraulic friction factor	:	Not more than 1.0					
	DISC DIFFERENTIAL PRESSURE (kg/cm² g)		SAME AS VALVE RATING					
	Cv	:	#					

NOTES :

5. VENDOR TO INDICATE VALUES FOR ITEMS MARKED (#) THUS.
6. MANUFACTURER TO SUBMIT QAPAND OBTAIN NPC'S APPROVAL BEFORE MANUFACTURING.
7. OUTSIDE SURFACE OF THE VALVE SHALL BE COATED WITH COPON HYCOTE 162HB, 1000 MICRONS DFT.
8. MOVEMENT OF DISC SHALL BE ACCOMODATED WITHIN THE FLANGES OF THE VALVE.

	DESCRIPTION	PRESSURE (kg/cm² g)	DURATION IN (min.) (MIN)	APPLICABLE CLAUSE OF SPECIFICATION	REMARKS
INSP TESTS	HYDROSTATIC SEAT/DISC (BI-DIRECTIONAL) TEST	22	5	DROP TIGHT	NPC TO WITNESS TESTS AS PER APPROVED QAP
	HYDROSTATIC BODY TEST	30	10		
	AIR LEAK SEAT TEST	5.5	3	BUBBLE TIGHT	
	DISC STRENGTH AS DESIGN PROOF TEST	30	10		TYPE TEST ON ONE VALVE ONLY, OTHERWISE TEST CERTIFICATE TO BE FURNISHED
	VALVE & ACTUATURPERFORMANCE TEST	REQUIRED			
	ACTUATOR TEST	NA			
	FUNCTIONAL QUALIFICATION TEST	NA			
	MATERIAL	PHYSICAL & CHEMICAL T.C. FROM MFG.			
	DIMENSIONAL CHECKS	MFG. CERTIFICATES & SAMPLE CHECK BY NPC			

ACCE	ACCESSORIES				NOT APPLICABLE		APPLICABLE	
	LIMIT SWITCHES FOR PNEUMATIC	NA		CLOSE				

S S O R I E S	CHAIN WHEEL	NA	FLOOR STAND :	
	EXTN. BONNET	NA	SUPPORT LUGS :	
	FLANGES	Mating Flanges as per B16.5, SORF, Class 150	OTHERS :	

NOTES :

1. VENDOR TO INDICATE VALUES FOR ITEMS MARKED (#)
2. MANUFACTURER TO SUBMIT QAP & OBTAIN NPC'S APPROVAL BEFORE MANUFACTURING.
3. TESTING SHALL BE AS PER API 598.
4. VALVE SHALL BE CAPABLE OF BI-DIRECTIONAL BUBBLE TIGHT SEALING.
5. VALVES SHOULD BE ABLE TO PERFORM WHEN DRIVE SHAFT & DISC ARE IN VERTICAL AND HORIZONTAL ORIENTATION, UPSTREAM OR DOWNSTREAM OF ELBOWS AND PIPE REDUCER.
6. STEM SHOULD NOT COME IN CONTACT WITH FLOWING FLUID (i.e. IT SHOULD REMAIN DRY).
7. INTEGRAL POSITION INDICATOR ON THE STEM AND TOP MOUNTING FLANGES FOR DISC POSITION IDENTIFICATION SHALL BE PROVIDED.
8. VALVE SHALL HAVE BLOW OUT PROOF STEM DESIGN FEATURE TO ARREST STEM COMING OUT FROM DISC DURING MAINTENANCE
9. HIGH STRENGTH STUB SHAFT SHALL BE PROVIDED WITH MINIMUM 1.5 TIMES DIA. PENETRATION INTO DISC HUBS WITH CLOSE TOLERANCE FIT AND SECURED WITH ADEQUATE NUMBER AND CAPACITY LOCK PINS.
10. SHAFT DIAMETER SELECTION, SHAFT TO DISC CONNECTION, PIN SIZING, OPERATOR SIZING SHALL BE IN-LINE WITH AWWA-C 504. CALCULATIONS TO BE SUBMITTED FOR PURCHASERS APPROVAL.
11. VENDOR SHOULD FURNISH THE PERFORMANCE CERTIFICATE FOR MINIMUM 2 YEARS OF SATISFACTORY OPERATION FOR SEAL OFFERED.
12. OUTSIDE SURFACE OF THE VALVE SHALL BE COATED WITH COPON HYCOTE 162HB, 1000 MICRONS DFT.

ANNEXURE-II

Response spectra from seismic load of the pump station UQA

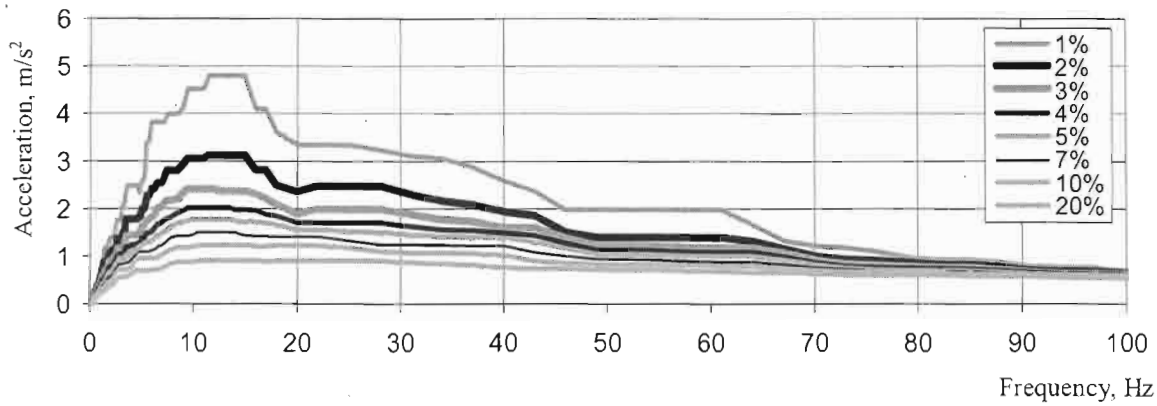

a) Along the horizontal grid x (ZPA = 0.54 m/s²)

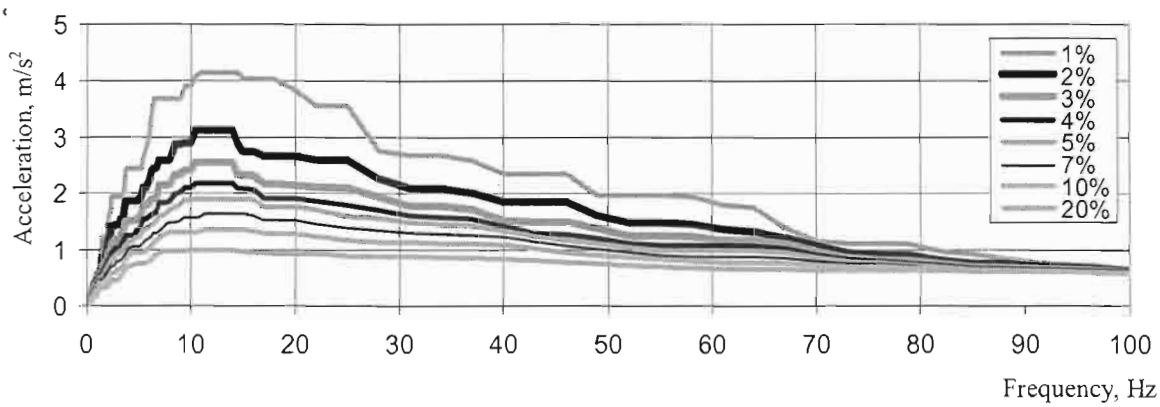

b) Along the horizontal grid y (ZPA = 0.58 m/s²)

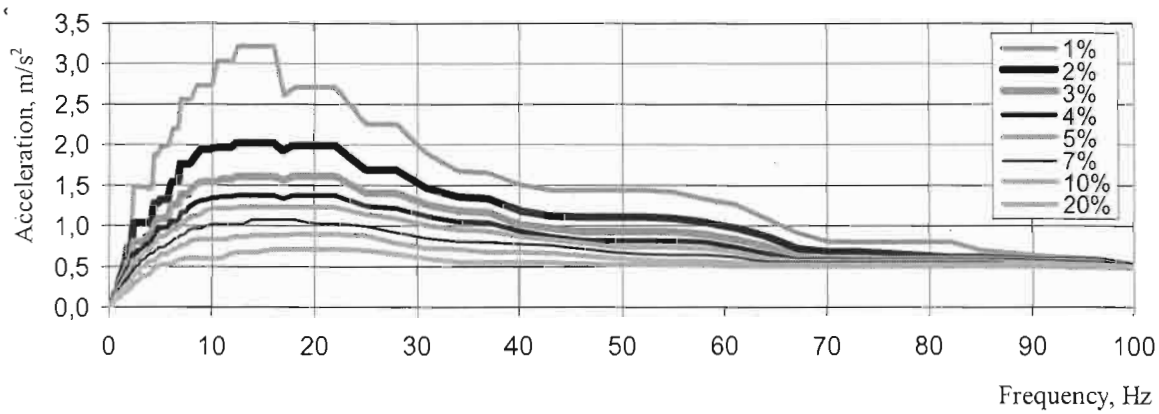

c) Along the vertical grid z (ZPA = 0.47 m/s²)

#

Figure B.1 – Building UQA. Generalized floor response spectra under seismic load of DBE level. Elevation minus 11.000

#
'DBE' in this Annexure to be read as 'OBE'

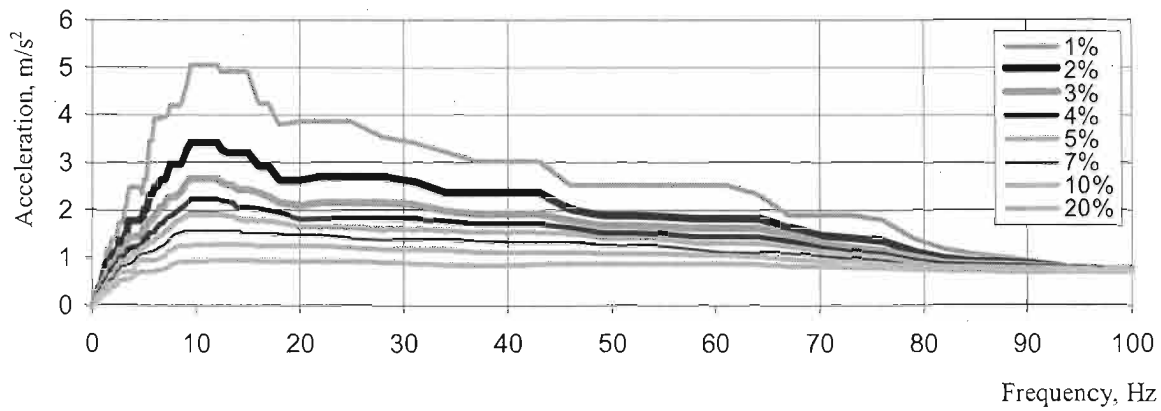

a) Along the horizontal grid x (ZPA = 0.60 m/s²)

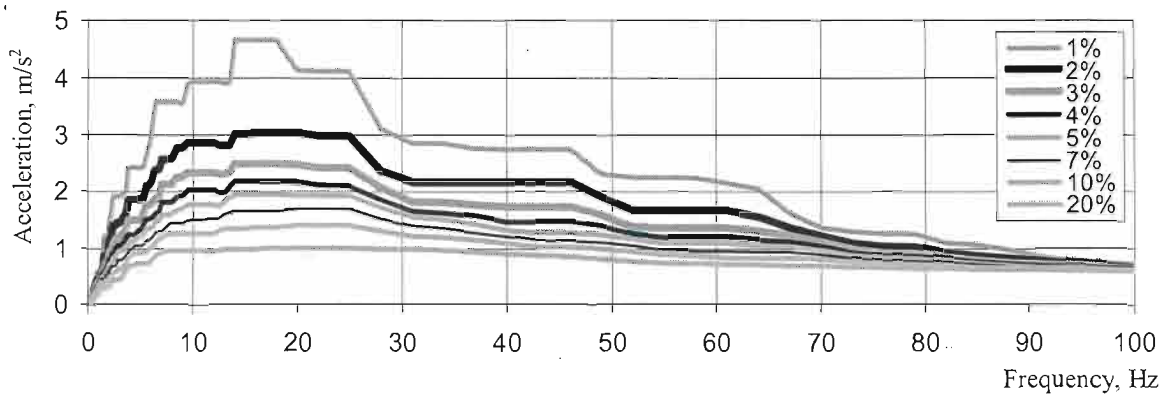

b) Along the horizontal grid y (ZPA = 0.59 m/s²)

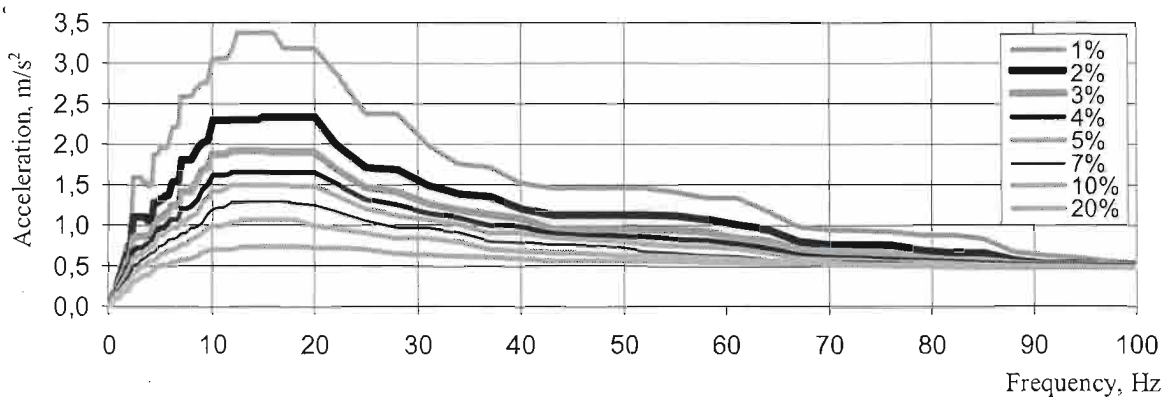

c) Along the vertical grid z (ZPA = 0.47 m/s²)

#

Figure B.2 – Building UQA. Generalized floor response spectra under seismic load of DBE level. Elevation minus 7.000

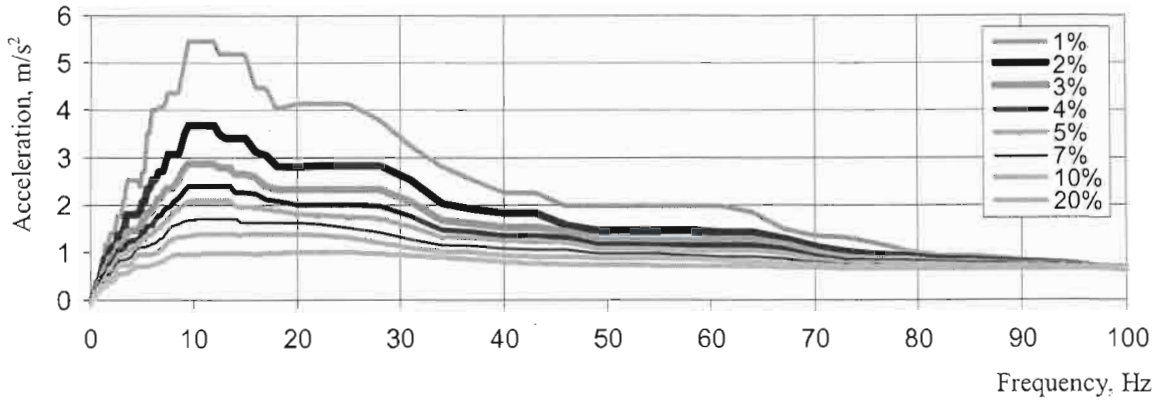

a) Along the horizontal grid x (ZPA = 0.65 m/s²)

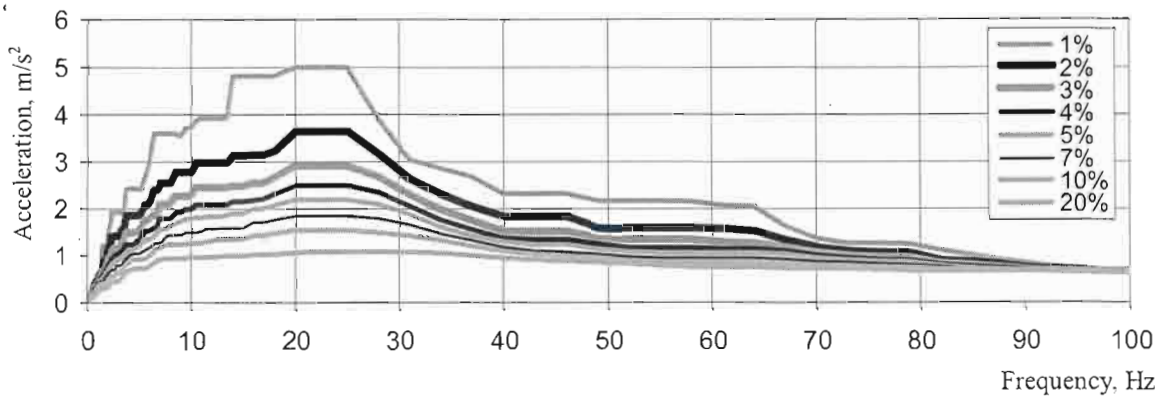

b) Along the horizontal grid y (ZPA = 0.64 m/s²)

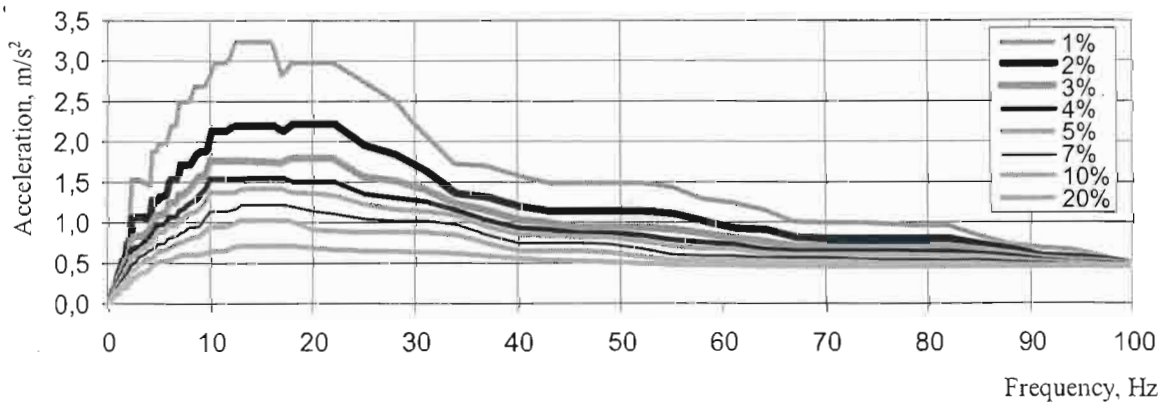

c) Along the vertical grid z (ZPA = 0.44 m/s²)

#

Figure B.3 – Building UQA. Generalized floor response spectra under seismic load of DBE level. Elevation minus 4.200

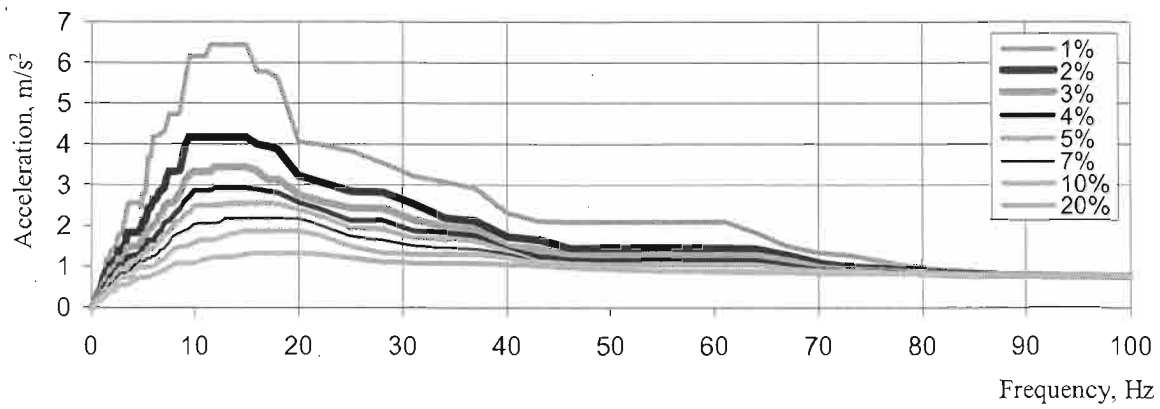

a) Along the horizontal grid x (ZPA = 0.77 m/s²)

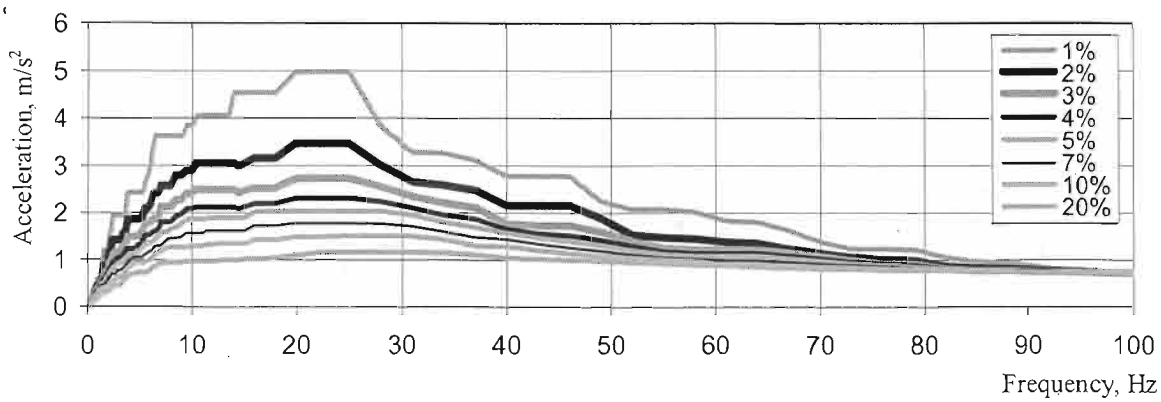

b) Along the horizontal grid y (ZPA = 0.72 m/s²)

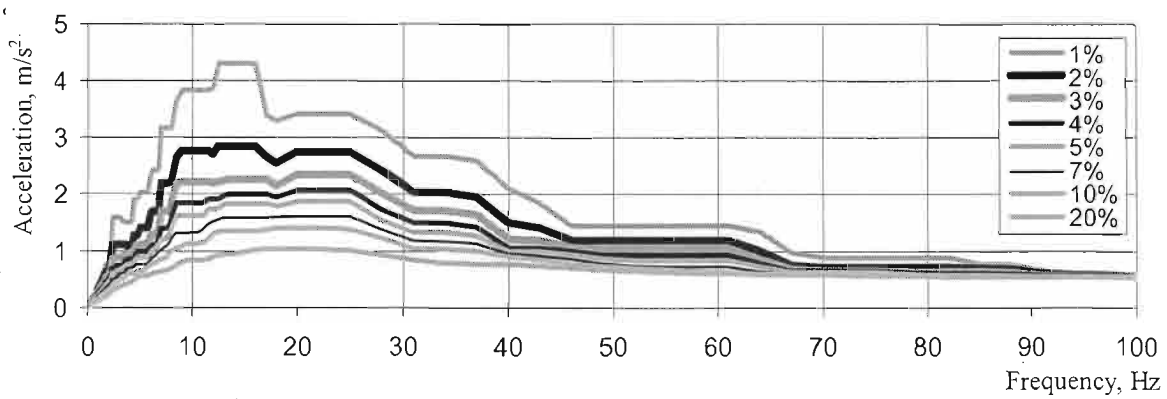

c) Along the vertical grid z (ZPA = 0.54 m/s²)

Figure B.4 – BuildingUQA. Generalized floor response spectra under seismic load of DBE level. Elevation minus 4.000

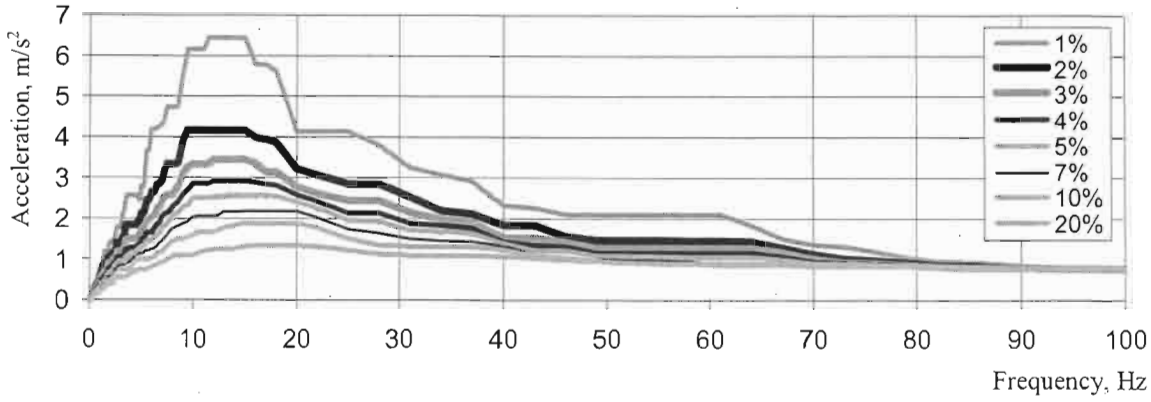

a) Along the horizontal grid x (ZPA = 0.77 m/s²)

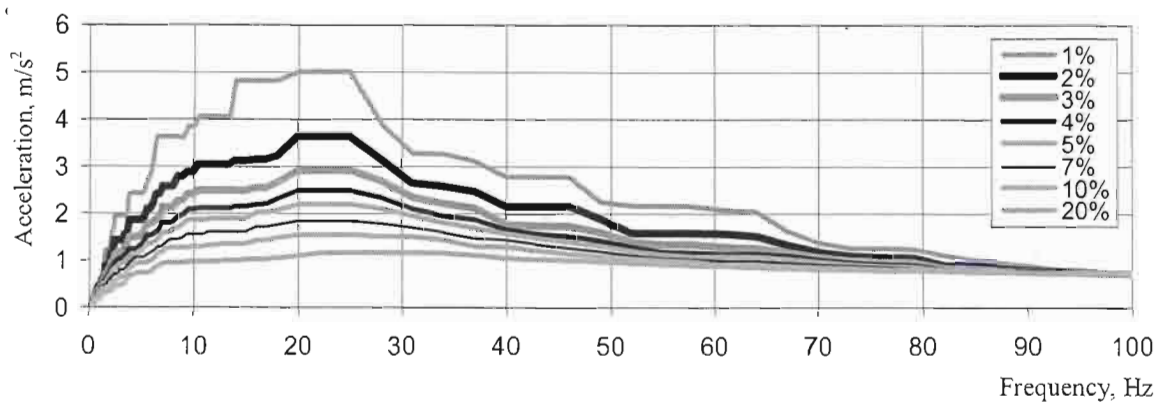

b) Along the horizontal grid y (ZPA = 0.72 m/s²)

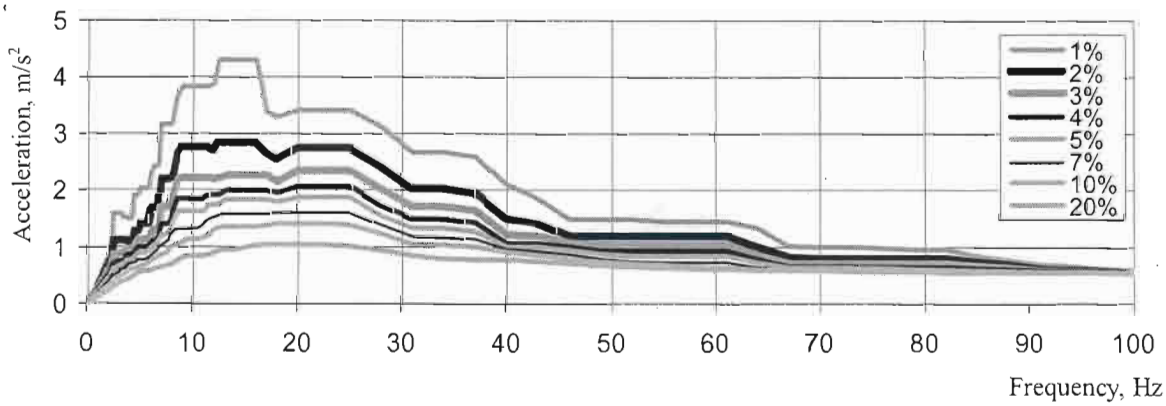

c) Along the vertical grid z (ZPA = 0.54 m/s²)

#

Figure B.5 – Building UQA. Generalized floor response spectra under seismic load of DBE level. Elevations minus 4.200 and minus 4.000

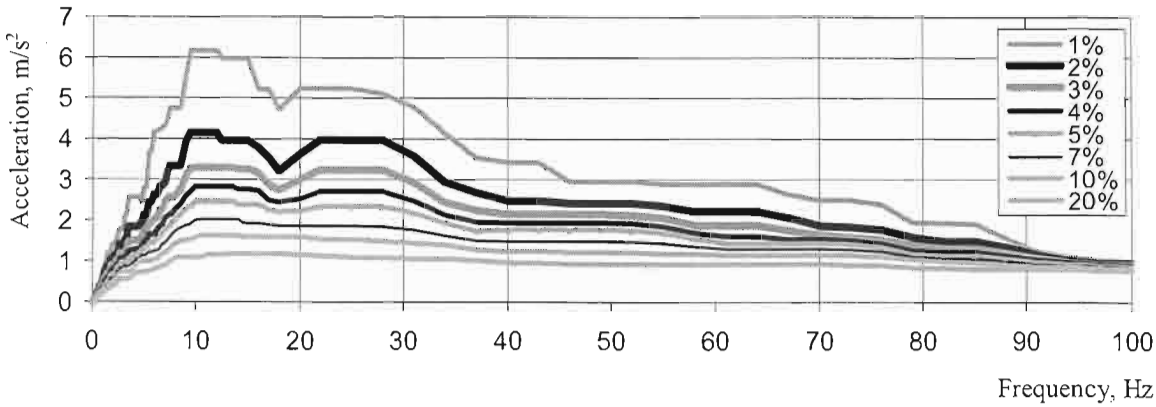

a) Along the horizontal grid x (ZPA = 0.74 m/s²)

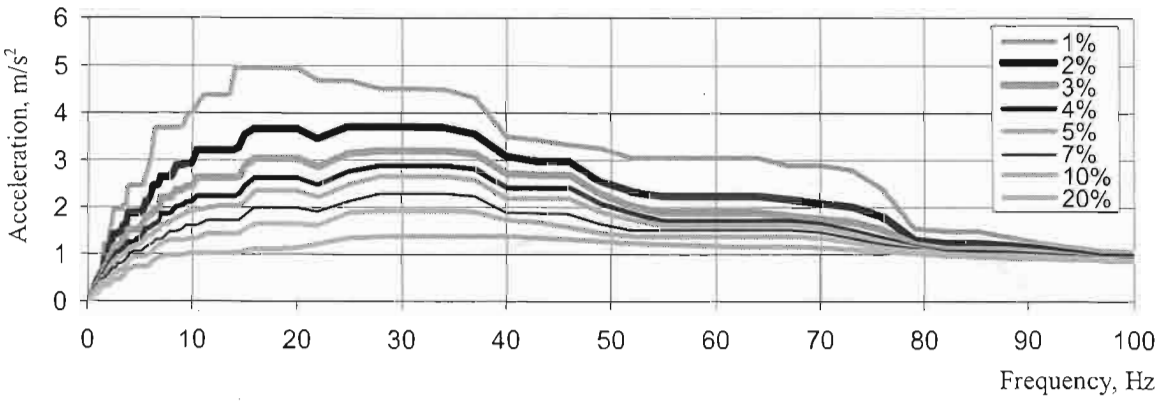

b) Along the horizontal grid y (ZPA = 0.83 m/s²)

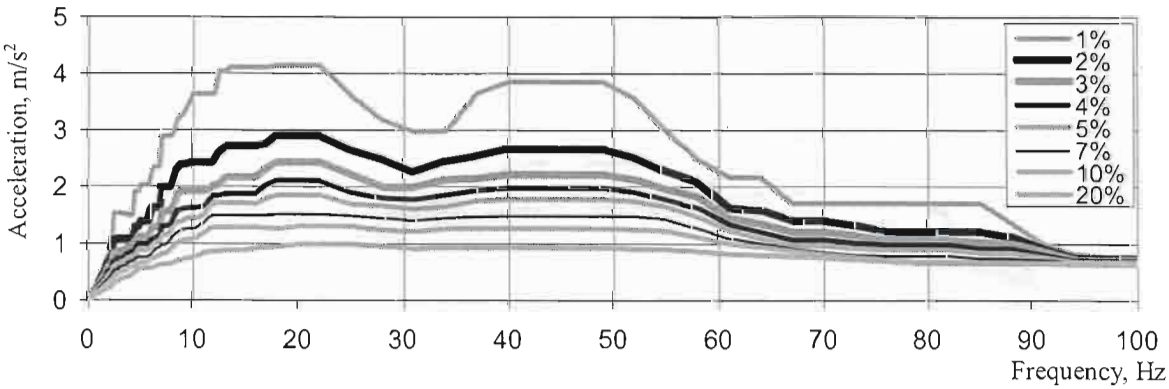

c) Along the vertical grid z (ZPA = 0.58 m/s²)

#

Figure B.6 – Building UQA. Generalized floor response spectra under seismic load of DBE level. Elevation minus 3.300

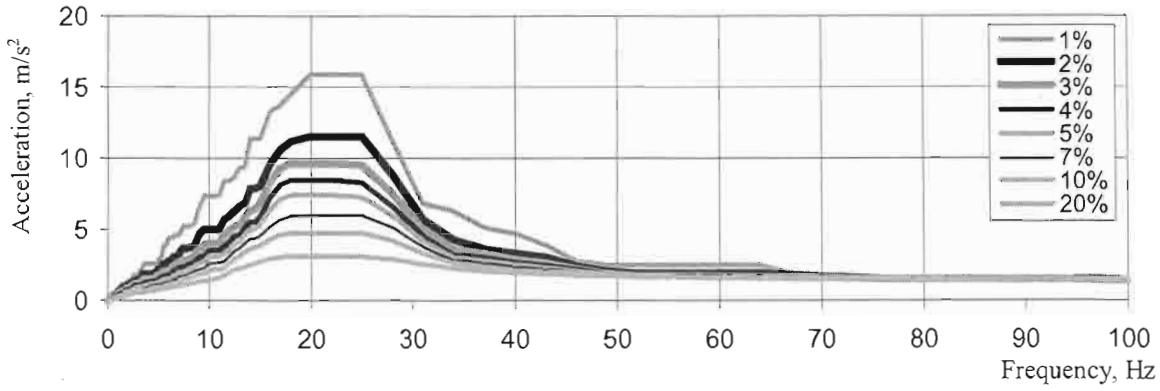

a) Along the horizontal grid x (ZPA = 1.42 m/s²)

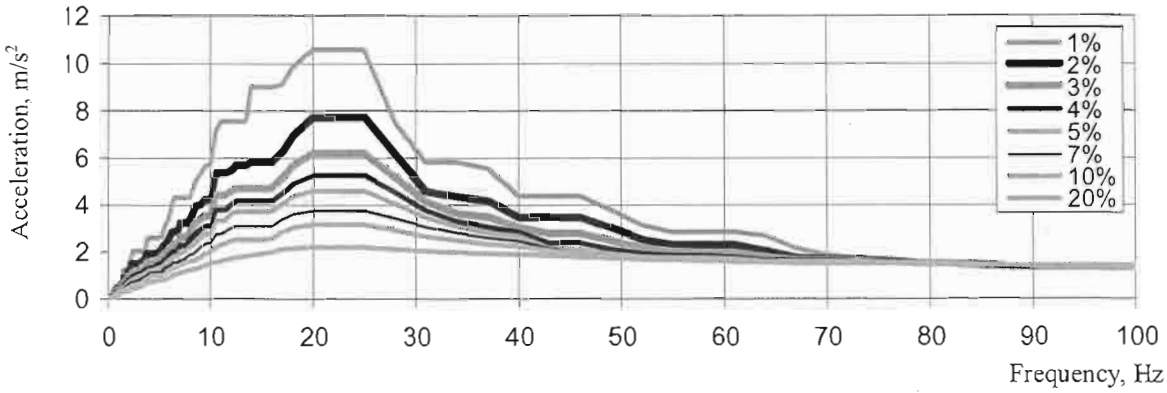

b) Along the horizontal grid y (ZPA = 1.36 m/s²)

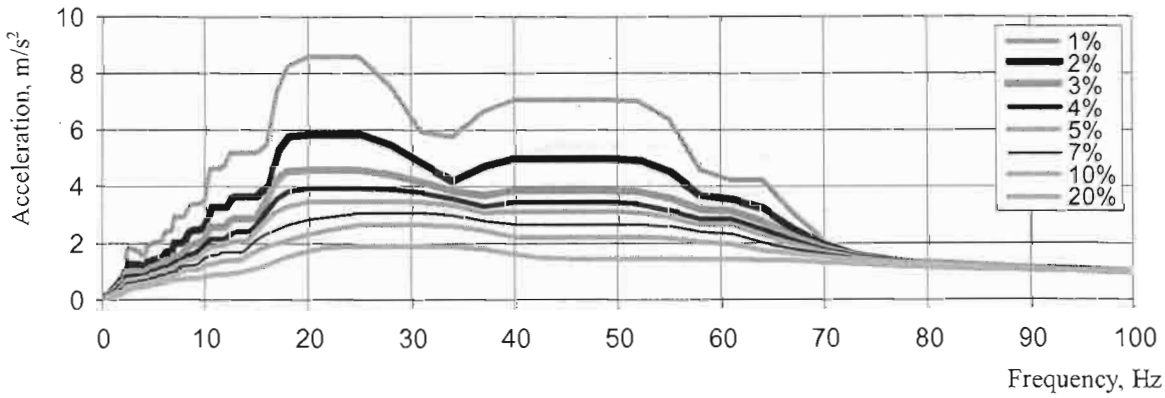

c) Along the vertical grid z (ZPA = 0.95 m/s²)

#

Figure B.7 – Building UQA. Generalized floor response spectra under seismic load of DBE level. Elevation + 2.850

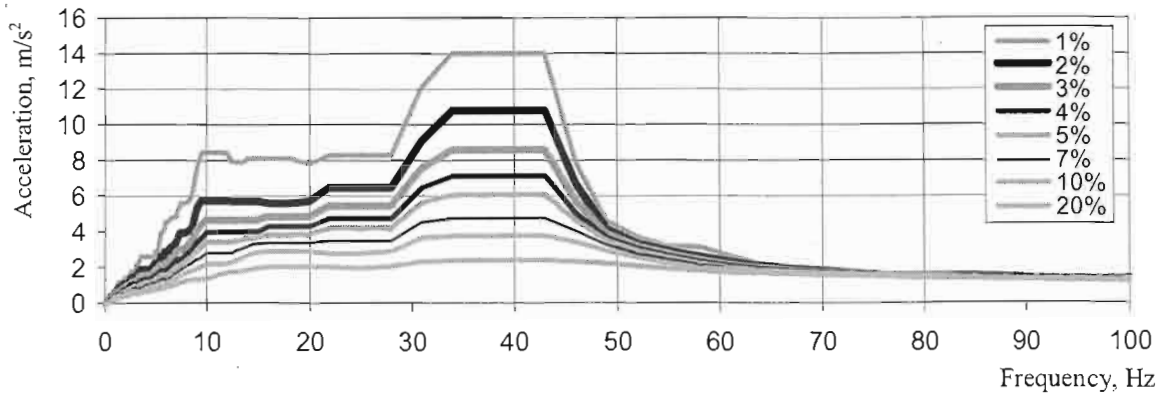

a) Along the horizontal grid x (ZPA = 1.27 m/s²)

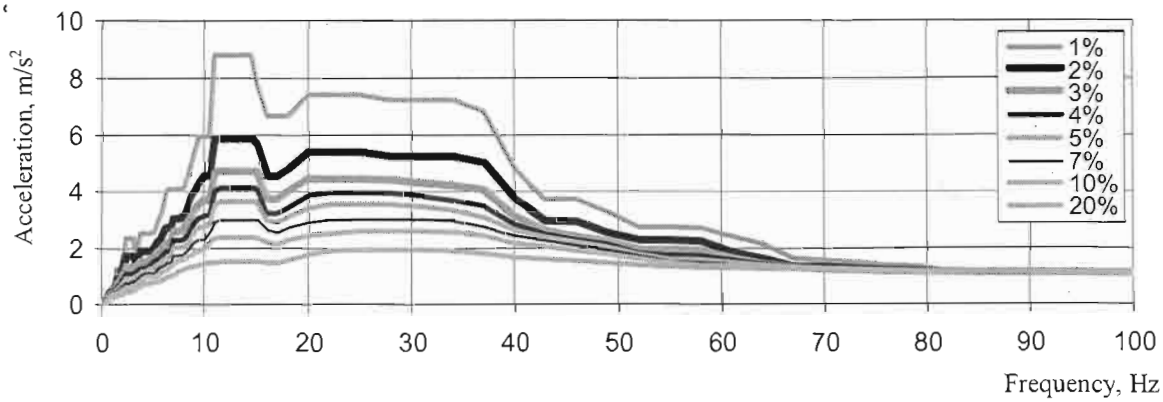

b) Along the horizontal grid y (ZPA = 1.05 m/s²)

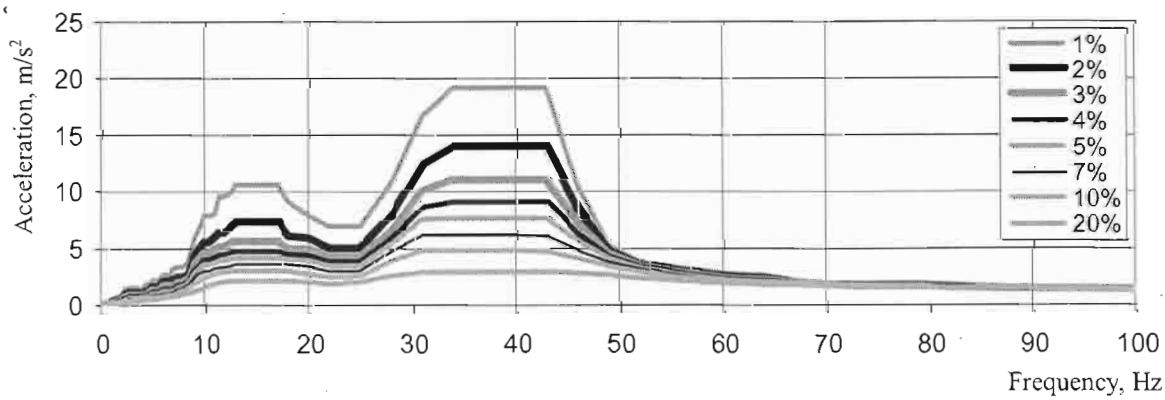

c) Along the vertical grid z (ZPA = 1.34 m/s²)

#

Figure B.8 – BuildingUQA. Generalized floor response spectra under seismic load of DBE level. Elevation + 7.550

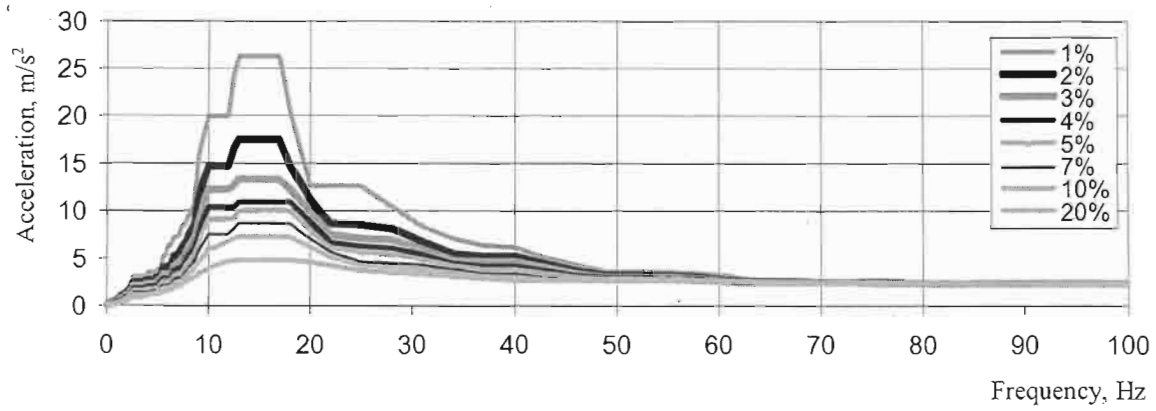

a) Along the horizontal grid x (ZPA = 2.35 m/s²)

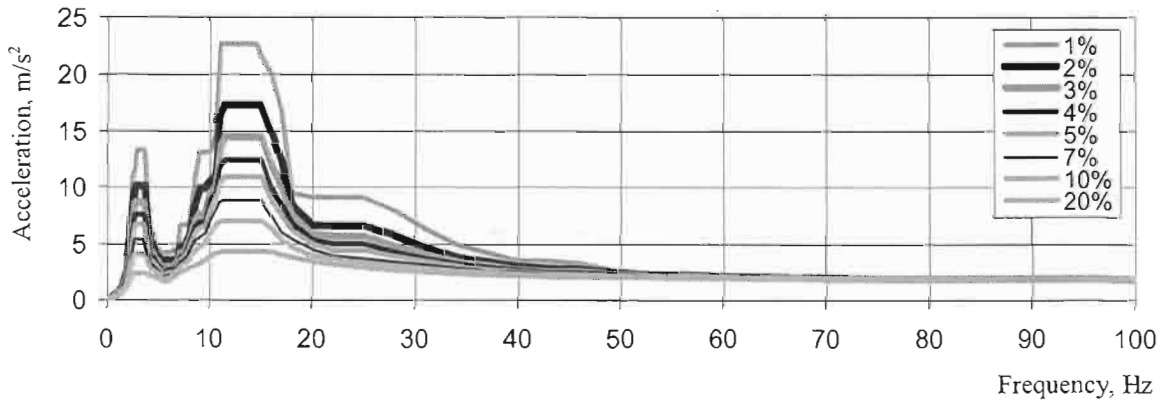

b) Along the horizontal grid y (ZPA = 1.86 m/s²)

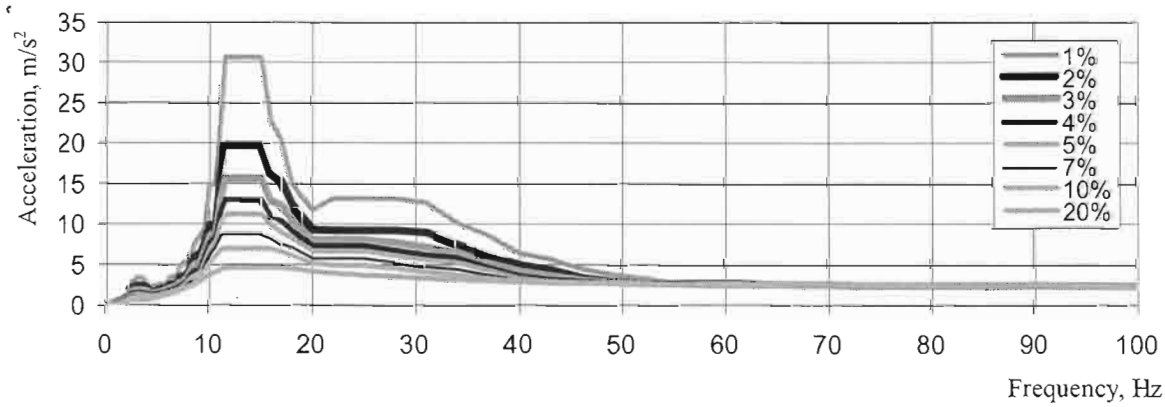

c) Along the vertical grid z (ZPA = 2.34 m/s²)

#

Figure B.9 – Building UQA. Generalized floor response spectra under seismic load of DBE level. Roof

Response spectra from seismic load of the UQZ tunnel.

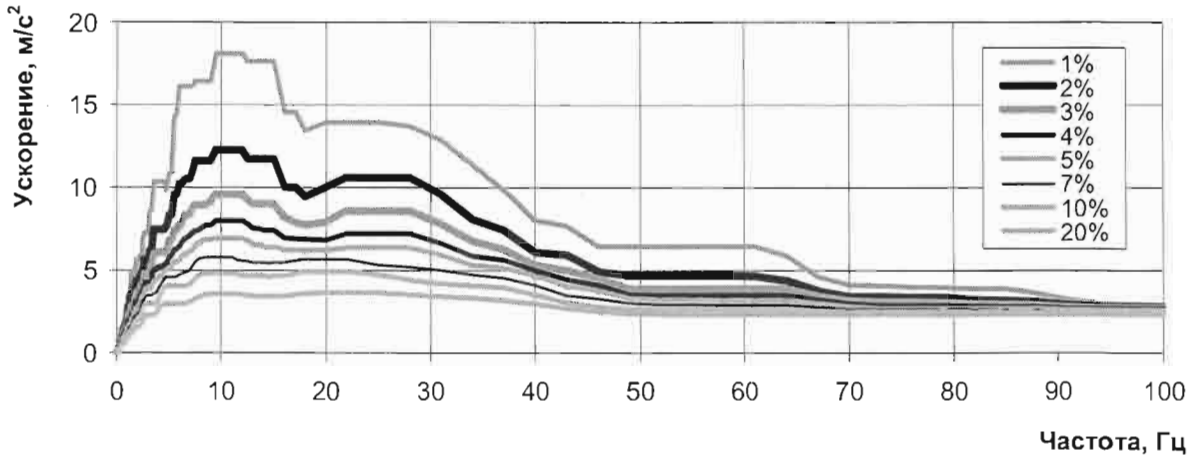

a) along the horizontal grid x (ZPA = 2,15 m/s^2)

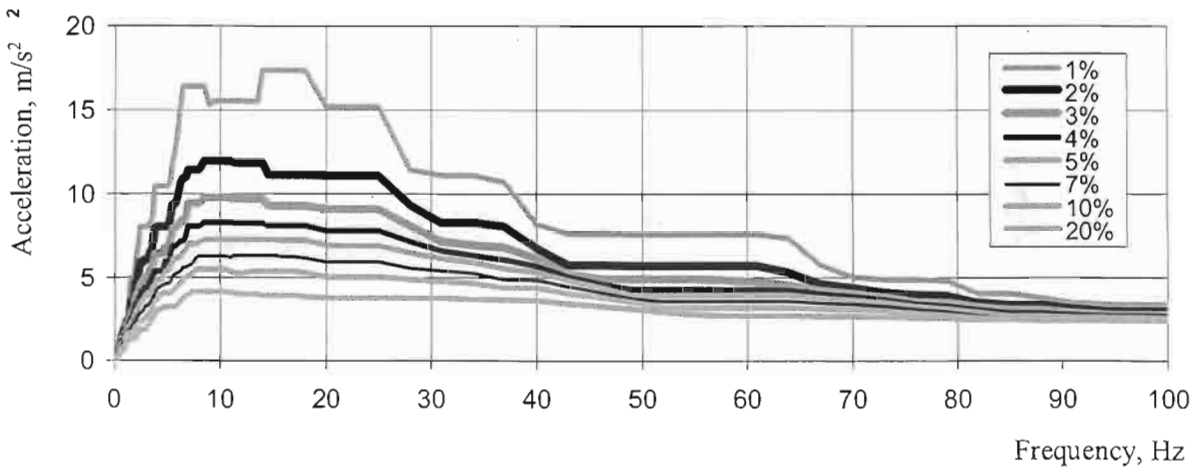

b) along the horizontal grid y (ZPA = 2,33 m/s^2)

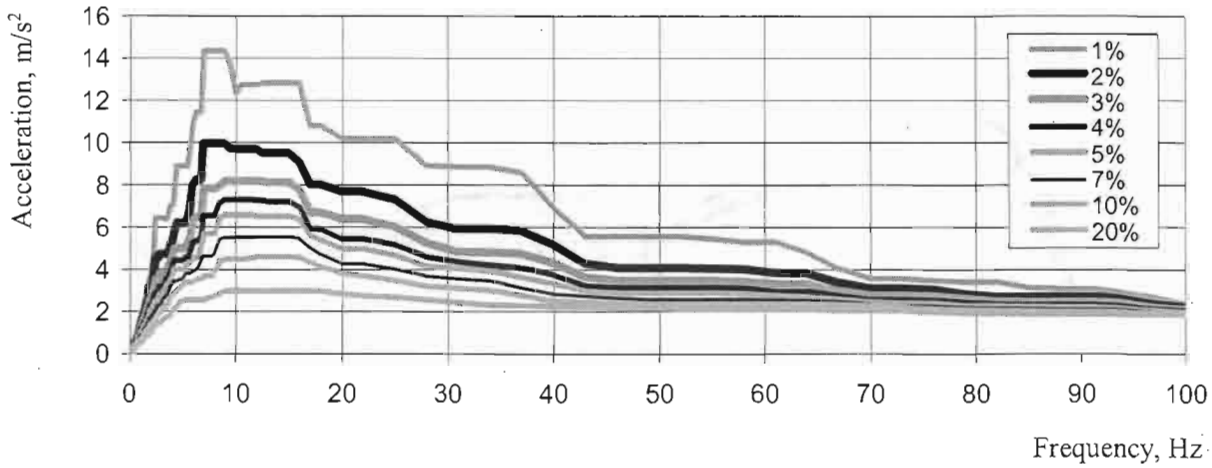

c) along the vertical grid z (ZPA = 1,86 m/s^2)

Picture C.1 – Structures 31UQZ (41UQZ). Generalized floor response spectra under seismic load of SSE level. From elevation minus 0,500 to minus 0,700

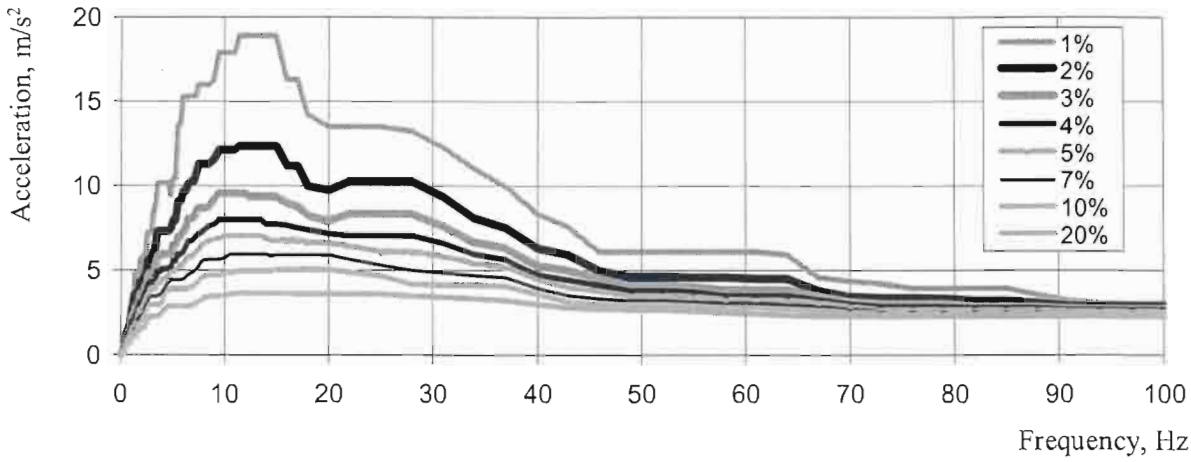

a) along the horizontal grid x (ZPA = 2,14 m/s^2)

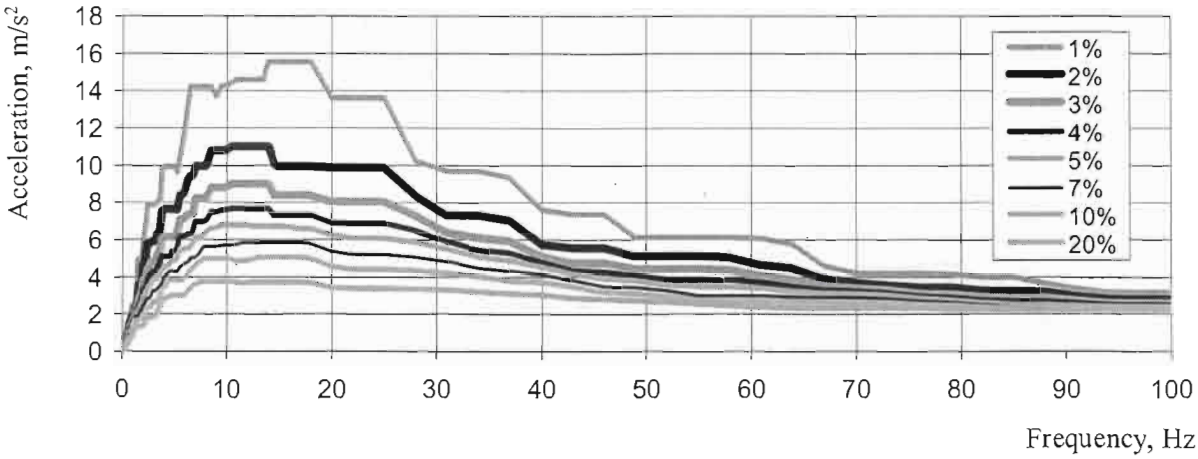

b) along the horizontal grid y (ZPA = 2,21 m/s^2)

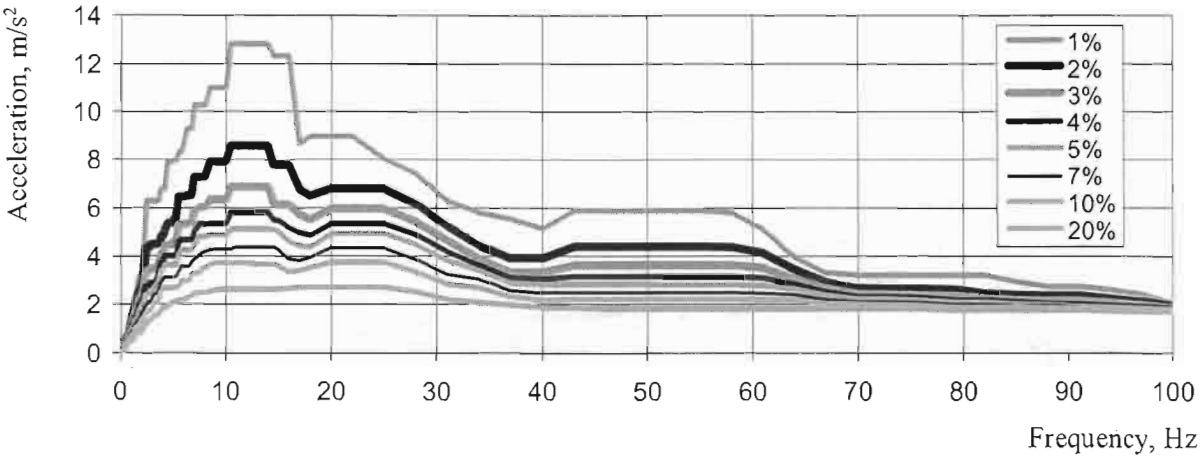

c) along the vertical grid z (ZPA = 1,59 m/s^2)

Picture C.2 – Structures 32UQZ (42UQZ). Generalized floor response spectra under seismic load of SSE level. From elevation minus 0,500 to minus 0,600

Response spectra of pump house for 1UQZ, 2UQZ tunnels draining and drying system

Table– Horizontal and vertical response spectra of pump house for Essential load tunnels draining and drying system, calculated for decay 2 % of critical value in case of DBE.

In meters per squared second

Frequency, Hz	At damping 2 % from the critical one	
	Horizontal acceleration	Vertical acceleration
0.50	1.50	1.10
1.00	3.00	2.20
1.50	4.50	3.30
2.00	6.00	4.40
2.50	6.13	4.50
3.00	6.26	4.60
3.50	6.40	4.71
4.00	6.53	4.81
4.50	6.66	4.91
5.00	6.79	5.01
5.50	6.92	5.11
6.00	7.05	5.21
6.50	7.19	5.32
7.00	7.32	5.42
7.50	6.91	5.85
8.00	6.86	5.81
8.50	6.80	5.76
9.00	6.75	5.72
9.50	6.69	5.68
10.00	6.64	5.63
10.50	6.58	5.59
11.00	6.53	5.55
11.50	6.47	5.50
12.00	6.42	5.46
12.50	6.37	5.36
13.00	6.32	5.26
13.50	6.28	5.15
14.00	6.23	5.05
14.50	6.18	4.95
15.00	6.13	4.85

Frequency, Hz	At damping 2 % from the critical one	
	Horizontal acceleration	Vertical acceleration
15.50	6.08	4.75
16.00	6.03	4.65
16.50	5.99	4.54
17.00	5.94	4.44
17.50	5.89	4.34
18.00	5.84	4.24
18.50	5.79	4.14
19.00	5.75	4.03
19.50	5.70	3.93
20.00	5.65	3.83
20.50	5.60	3.73
21.00	5.55	3.63
21.50	5.50	3.53
22.00	5.46	3.42
22.50	5.41	3.32
23.00	5.36	3.22
23.50	5.22	3.14
24.00	5.07	3.05
24.50	4.93	2.97
25.00	4.79	2.90
25.50	4.64	2.80
26.00	4.50	2.72
26.50	4.36	2.63
27.00	4.21	2.55
27.50	4.07	2.47
28.00	3.92	2.38
28.50	3.78	2.30
29.00	3.64	2.22
29.50	3.49	2.13
30.00	3.35	2.05

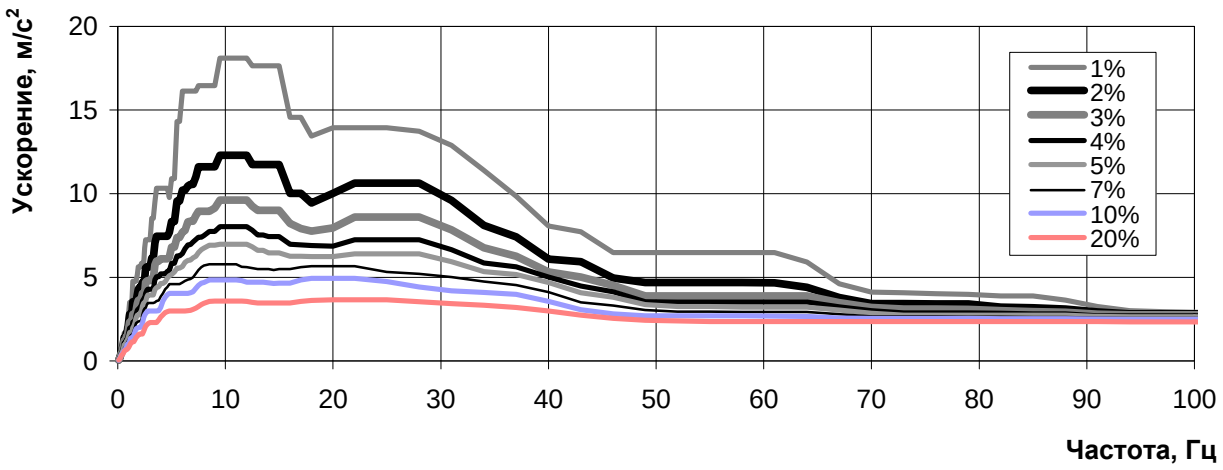

a) on horizontal axis x (ZPA = 2,15 m/s^2)

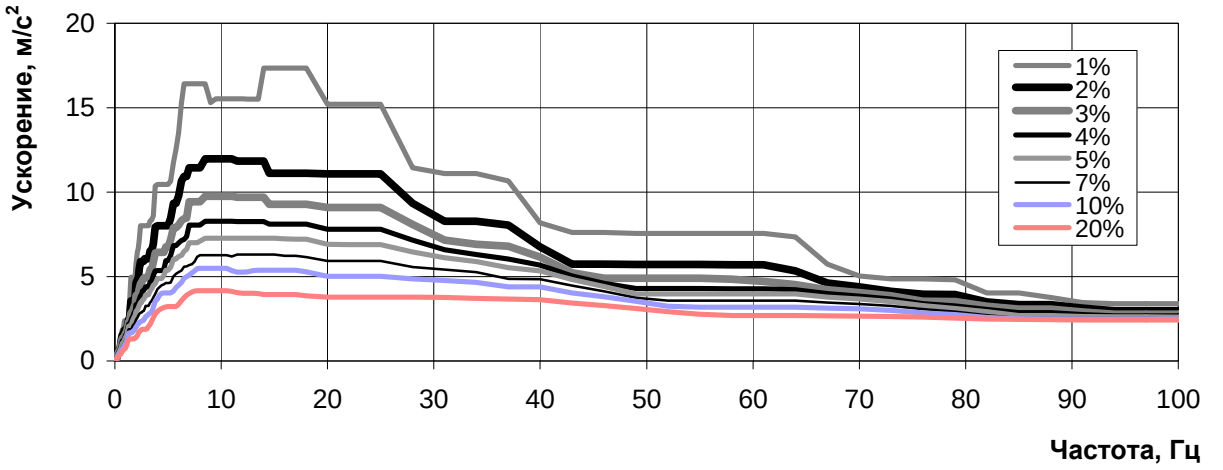

b) on horizontal axis y (ZPA = 2,33 m/s^2)

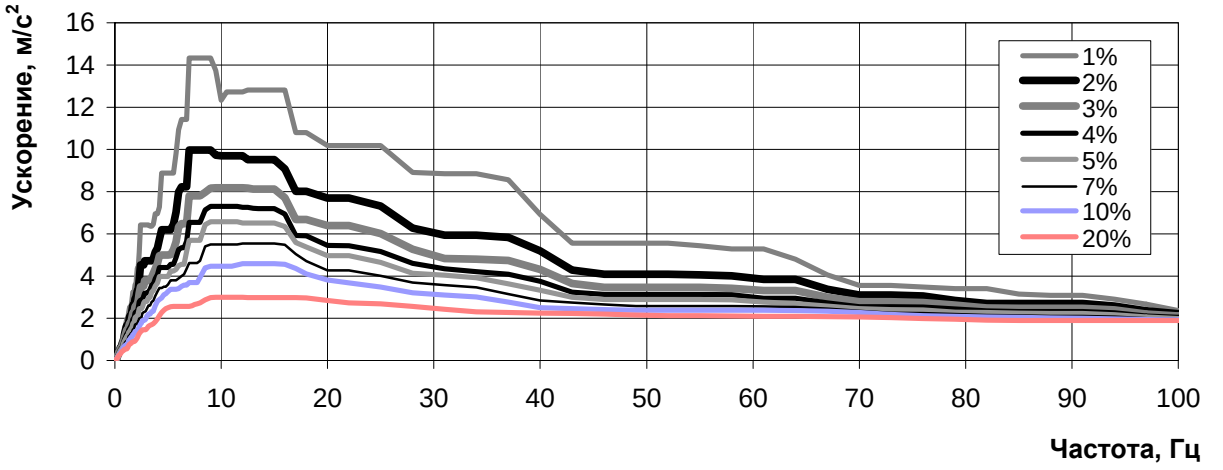

c) on vertical axis z (ZPA = 1,86 m/s^2)

Figure 5.1 – Structures 31UQZ, 41UQZ, 31UUQ, 32UUQ, 41UUQ, 42UUQ. Generalized floor-wise response spectra under seismic load of SSE level. From elevation minus 0,700 to minus 0,500. **(Ускорение –Acceleration, m/s^2; Частота-Frequency, Hz)**

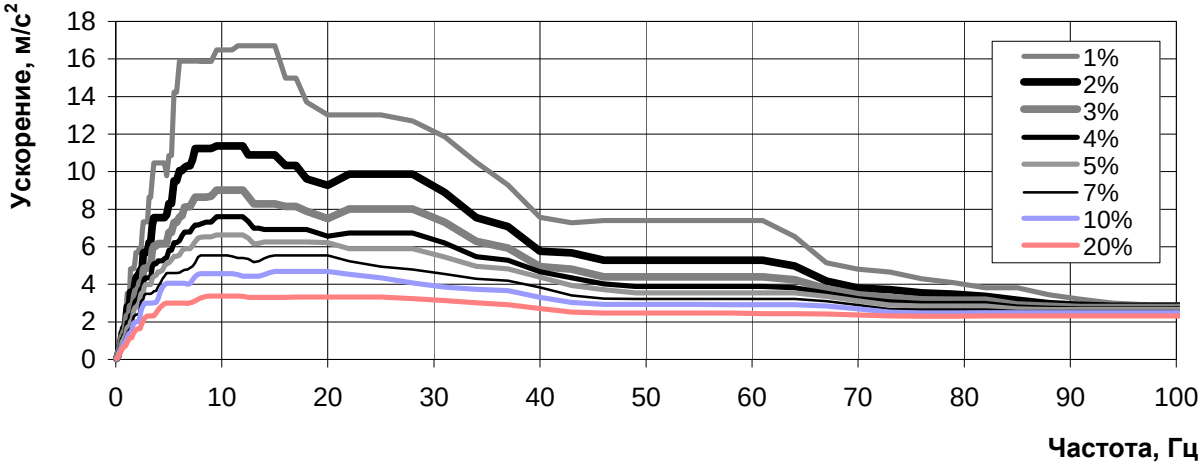

a) on horizontal axis x (ZPA = 2,11 m/s^2)

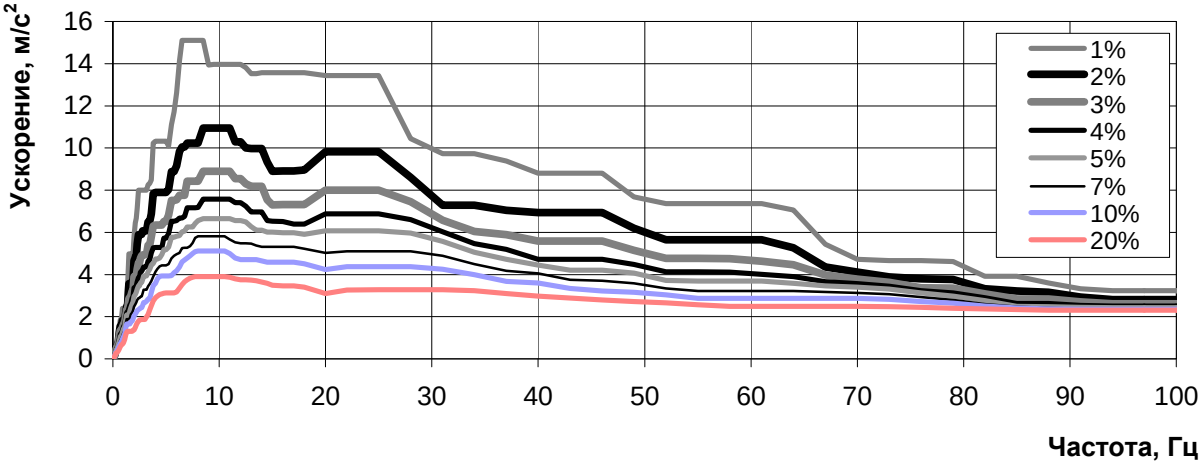

b) on horizontal axis y (ZPA = 2,25 m/s^2)

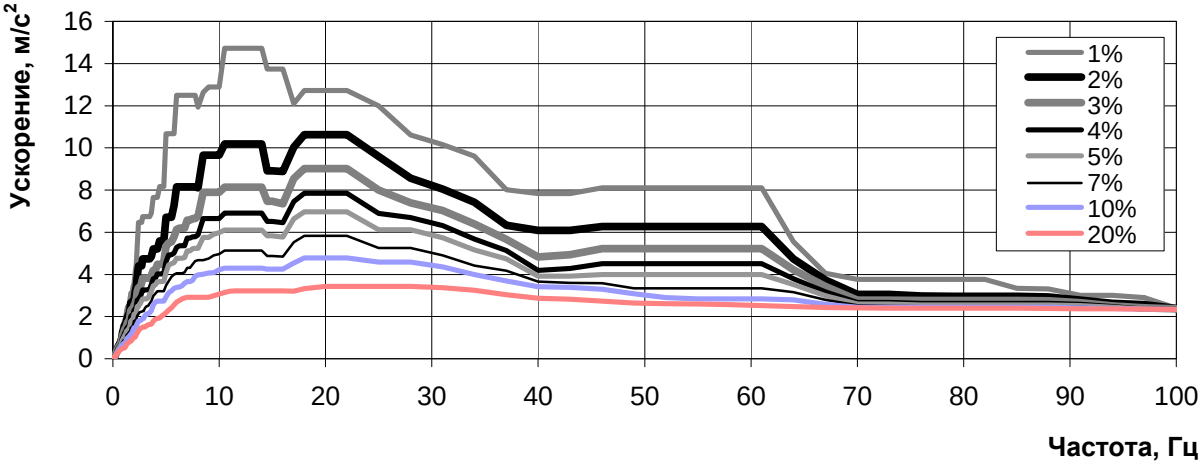

c) on vertical axis z (ZPA = 2,28 m/s^2)

Figure 5.2 – Structure 31UQZ, 41UQZ. Generalized floor-wise response spectra under seismic load of SSE level. Foundation slab. From elevation + 2,400 to + 3,500.

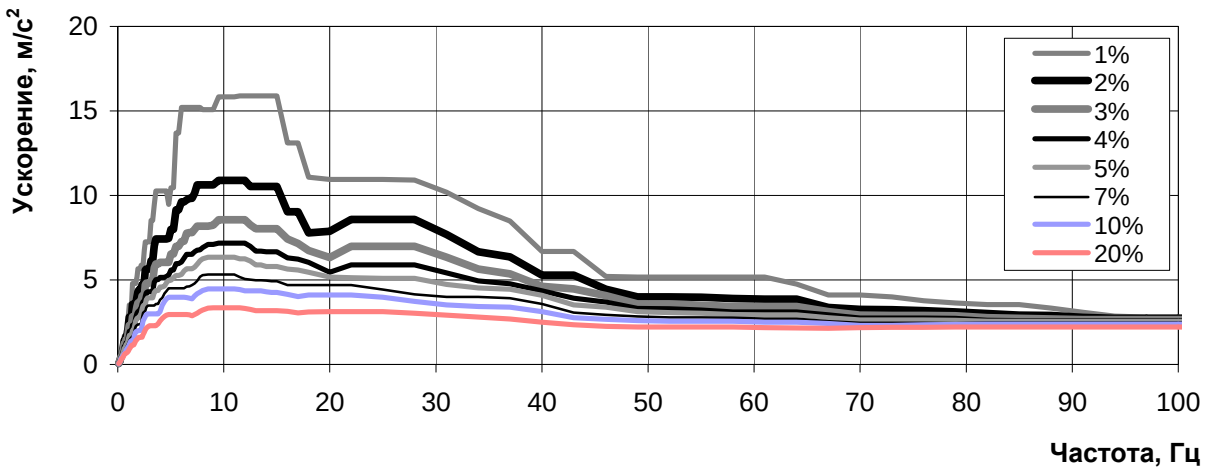

a) on horizontal axis x (ZPA = 2,04 m/s^2)

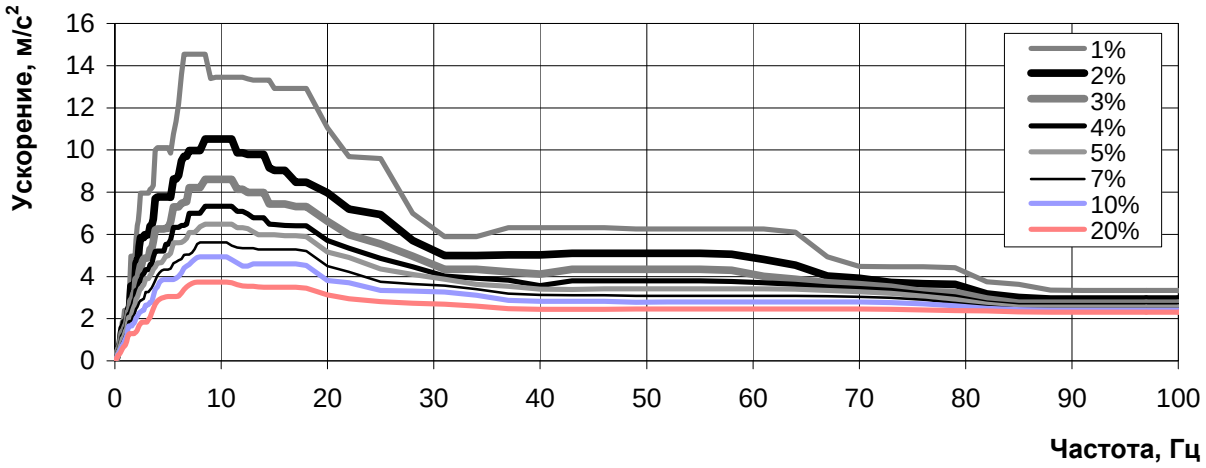

b) on horizontal axis y (ZPA = 2,27 m/s^2)

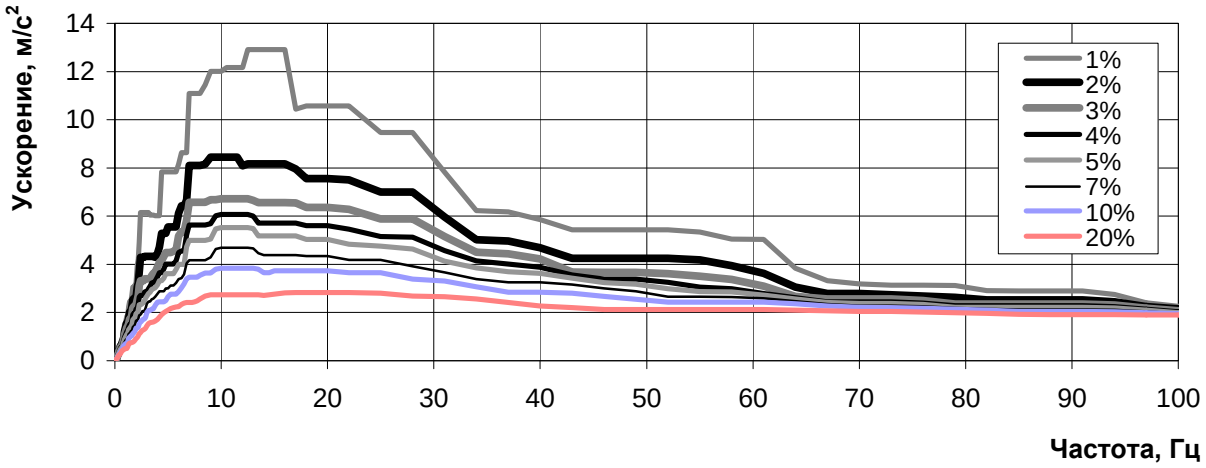

c) on vertical axis z (ZPA = 1,79 m/s^2)

Figure 5.3 – Structure 33UUQ, 43UUQ. Generalized floor-wise response spectra under seismic load of SSE level. Foundation slab, elevation + 2,800.

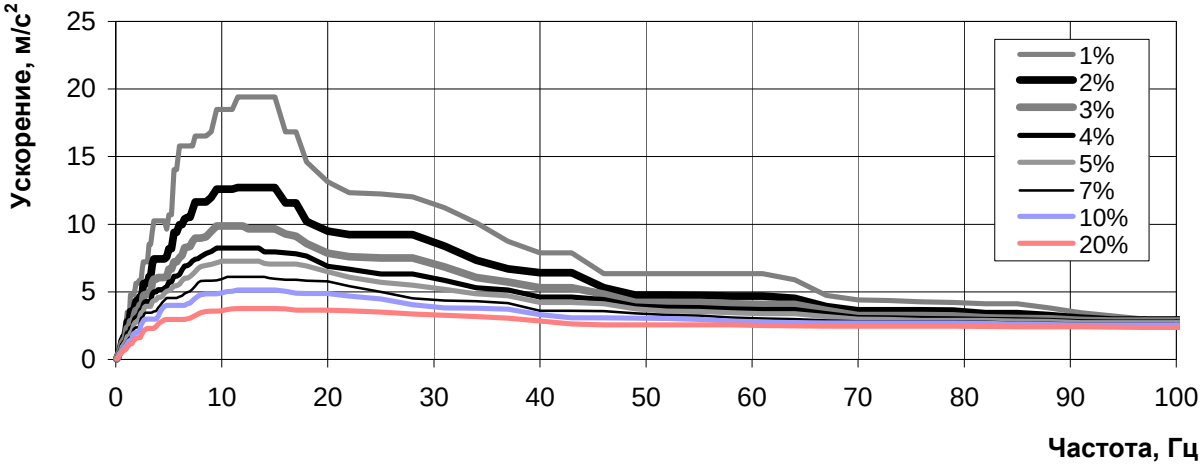

a) on horizontal axis x (ZPA = 2,22 m/s^2)

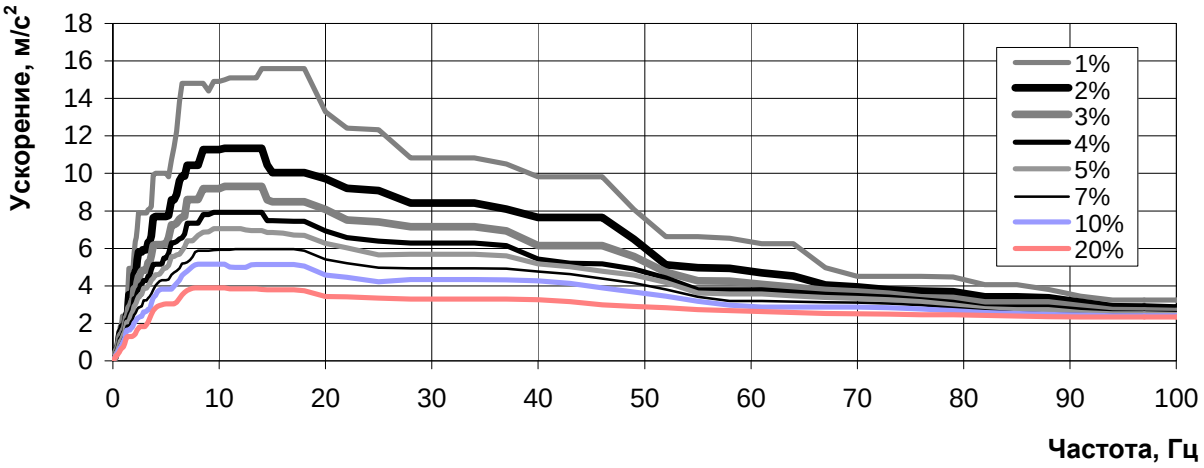

b) on horizontal axis y (ZPA = 2,32 m/s^2)

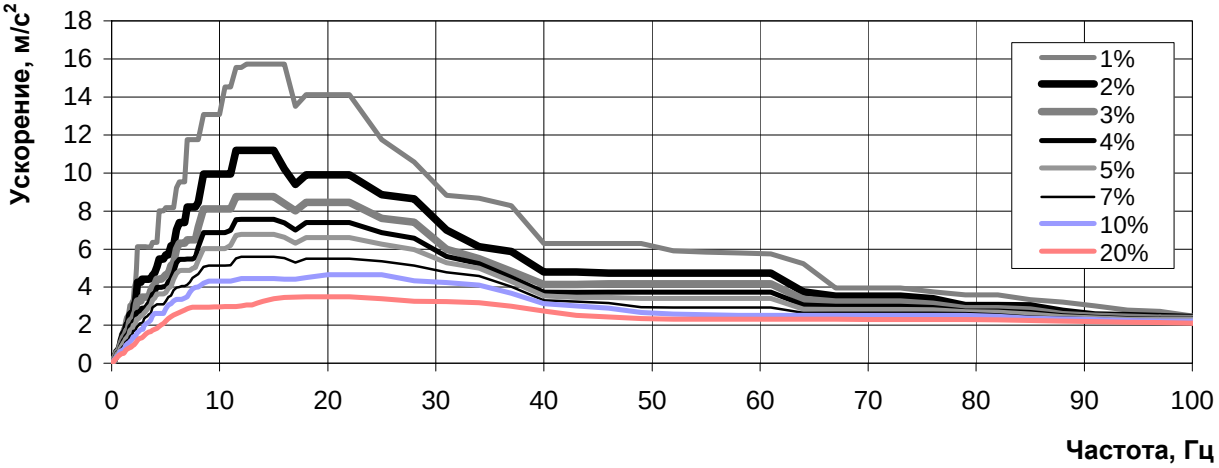

c) on vertical axis z (ZPA =2,02 m/s^2)

Figure 5.4 – Structures 31UQZ, 41UQZ, 34UUQ, 44UUQ, 35UUQ, 45UUQ. Generalized floor-wise response spectra under seismic load of SSE level. Foundation slab from elevation + 4,900 to + 5,000.

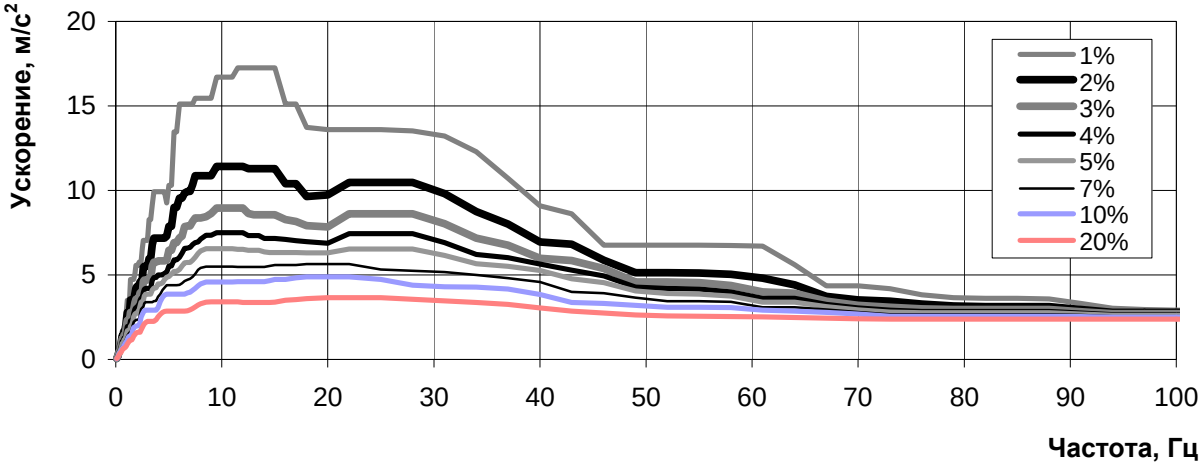

a) on horizontal axis x (ZPA = 2,16 m/s^2)

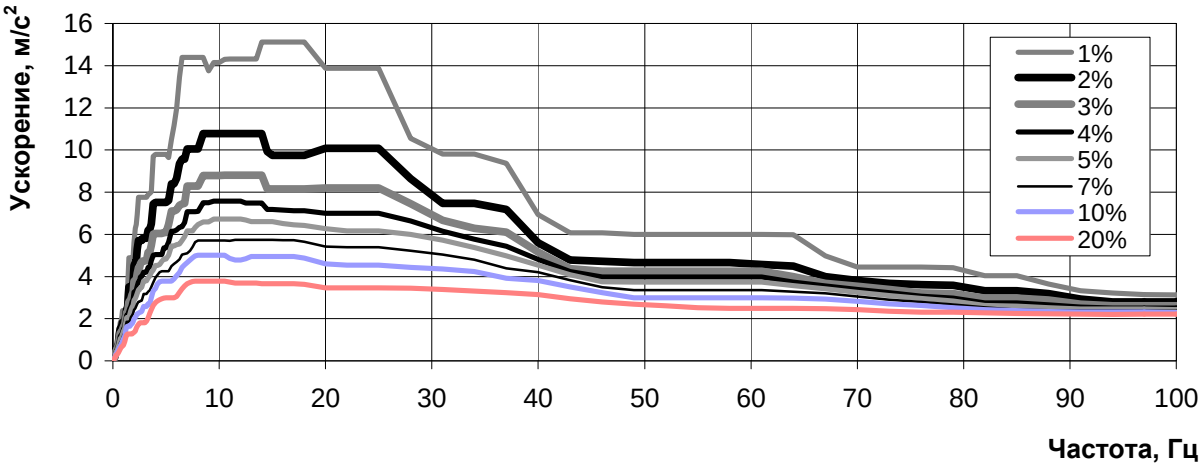

b) on horizontal axis y (ZPA = 2,20 m/s^2)

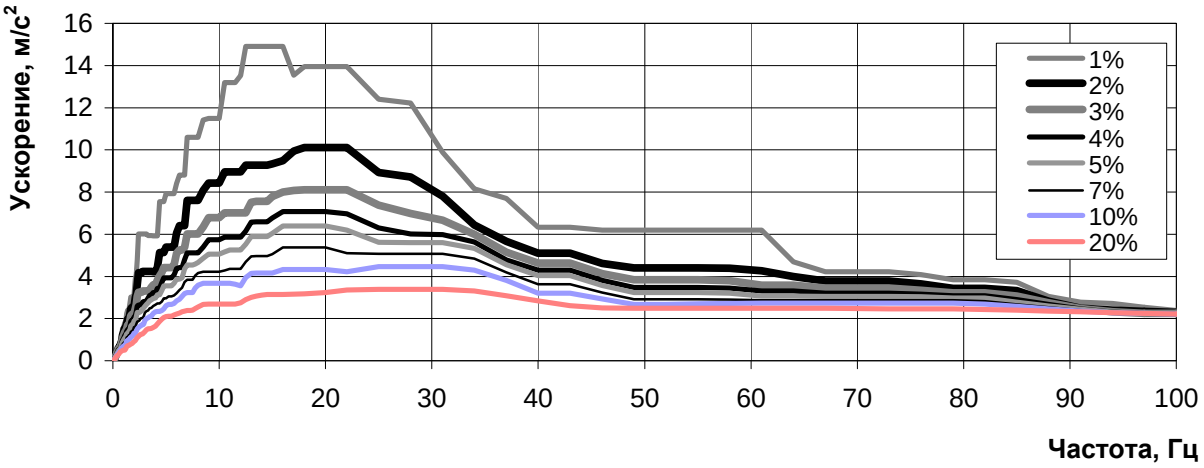

c) on vertical axis z (ZPA = 2,10 m/s^2)

Figure 5.5 – Structures 36UUQ, 46UUQ, 37UUQ, 47UUQ. Generalized floor-wise response spectra under seismic load of SSE level. Foundation slab at elevation + 5,250 (+ 5,400).

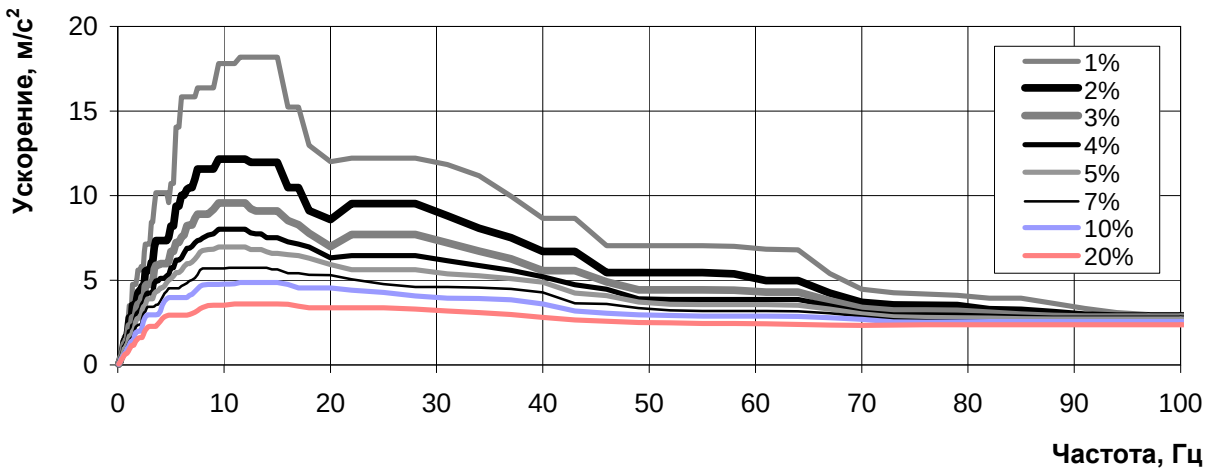

a) on horizontal axis x (ZPA = 2,19 m/s^2)

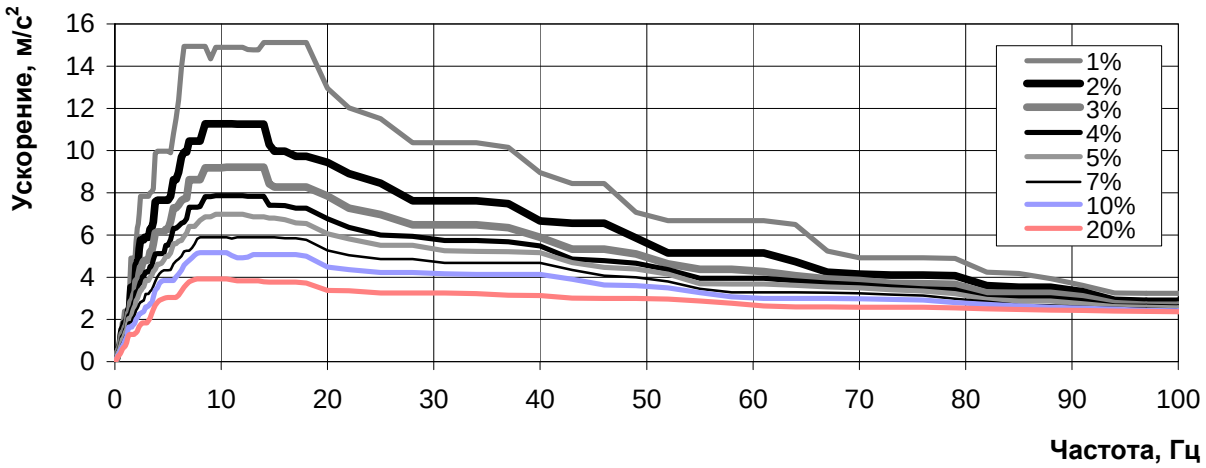

b) on horizontal axis y (ZPA = 2,36 m/s^2)

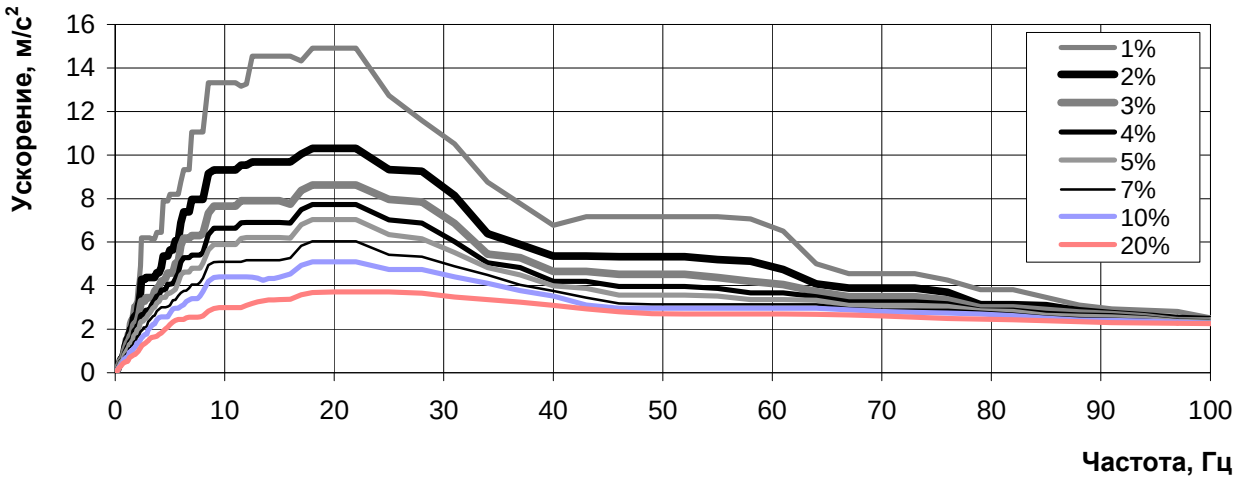

c) on vertical axis z (ZPA = 2,10 m/s^2)

Figure 5.6 – Structure 31UUQ, 41UUQ. Generalized floor-wise response spectra under seismic load of SSE level. Foundation slab from elevation + 5,800 to + 6,500.

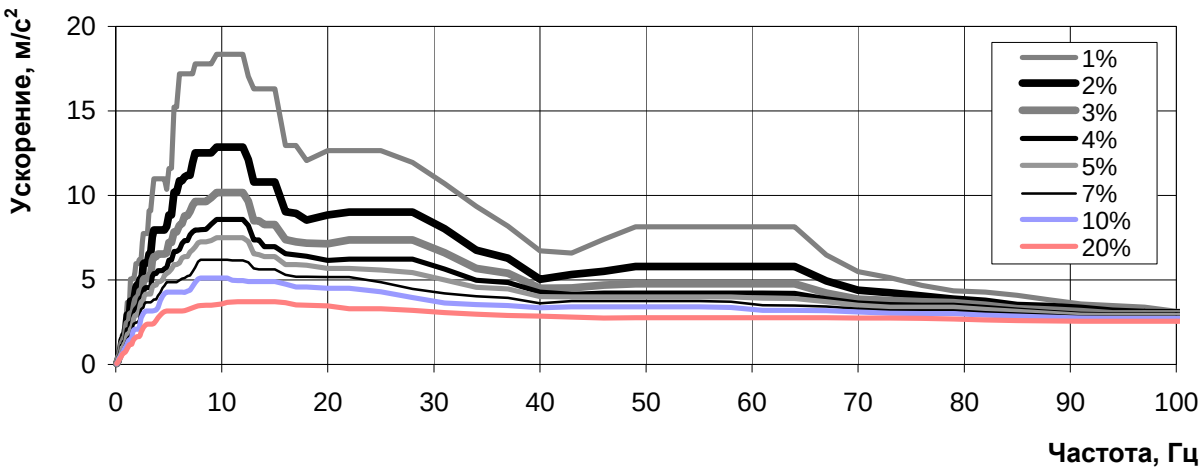

a) on horizontal axis x (ZPA = 2,32 m/s^2)

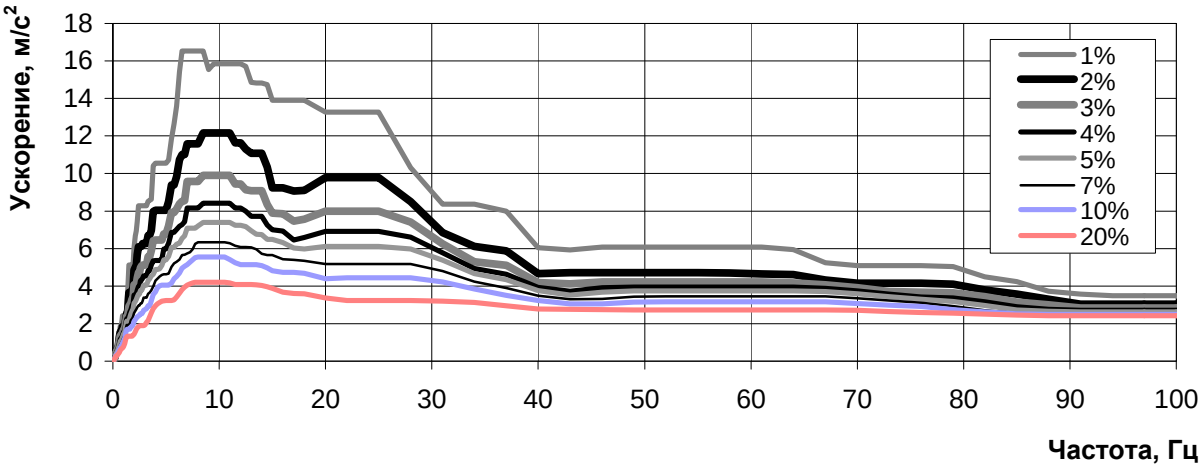

b) on horizontal axis y (ZPA = 2,35 m/s^2)

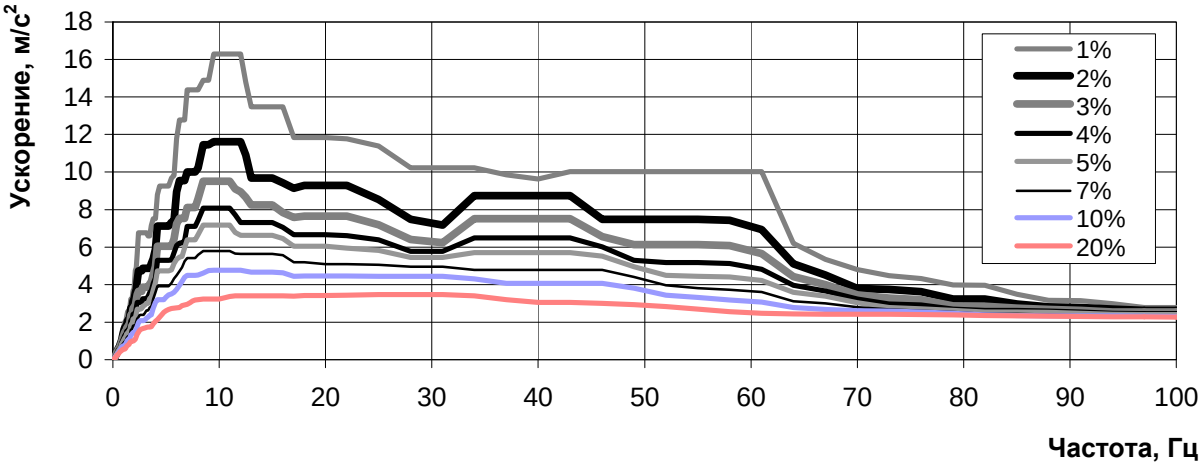

c) on vertical axis z (ZPA = 2,14 m/s^2)

Figure 5.7 – Structure 31UQZ, 41UQZ. Generalized floor-wise response spectra under seismic load of SSE level. Slab. From elevation + 1,800 to + 2,000

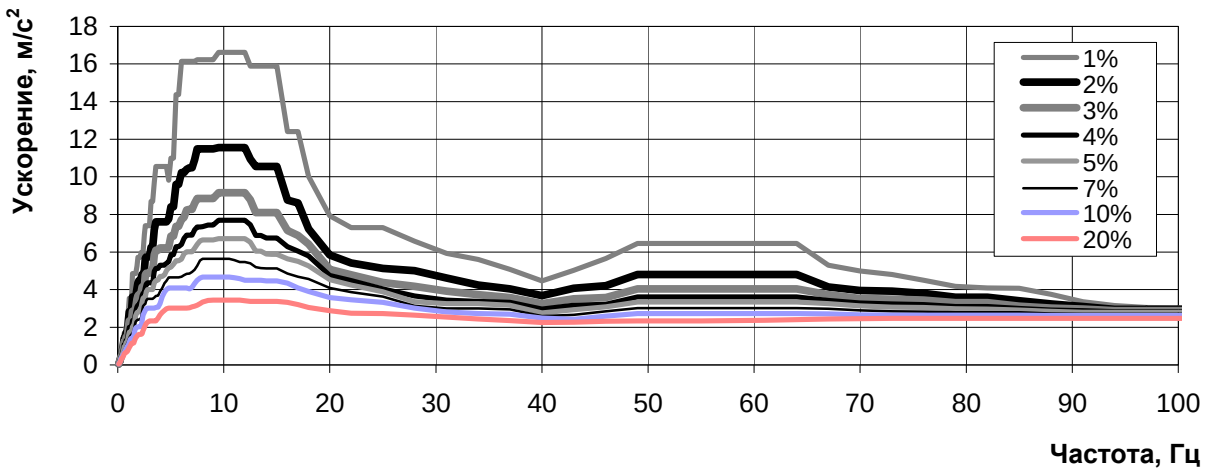

a) on horizontal axis x (ZPA = 2,15 m/s2)

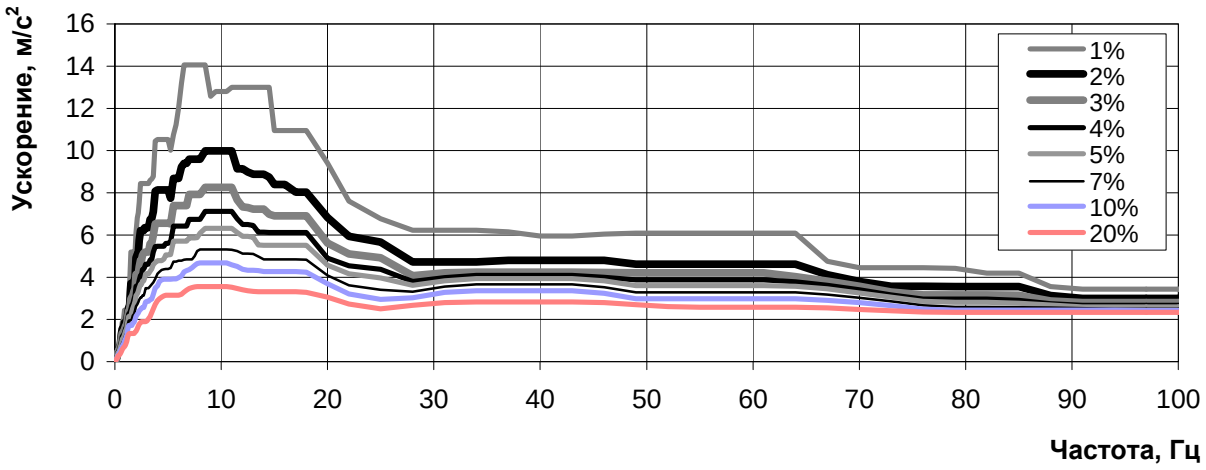

b) on horizontal axis y (ZPA = 2,29 m/s2)

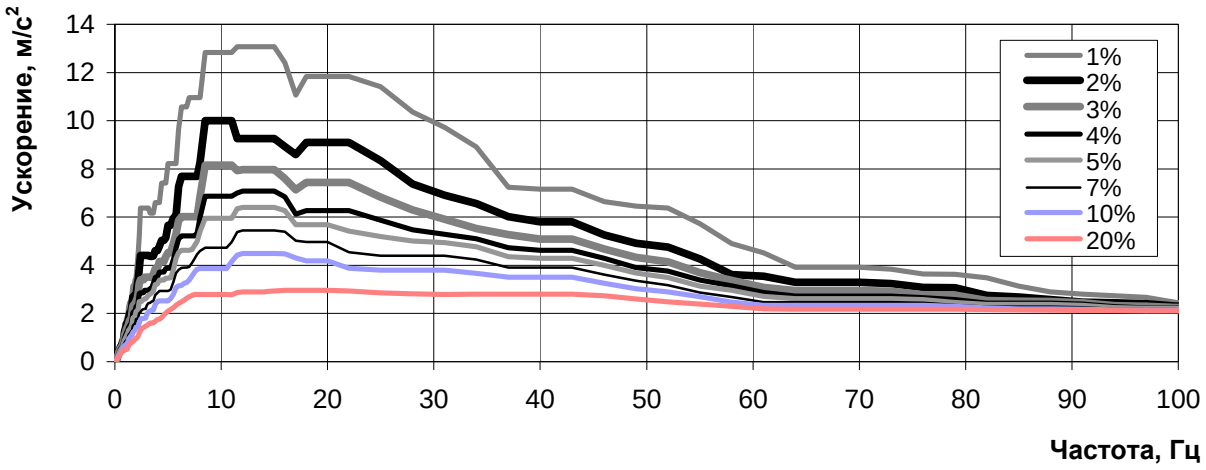

c) on vertical axis z (ZPA = 2,10 m/s2)

Figure 5.8 – Structure 31UQZ, 41UQZ. Generalized floor-wise response spectra under seismic load of SSE LEVEL.Slab. Elevation+ 4,400

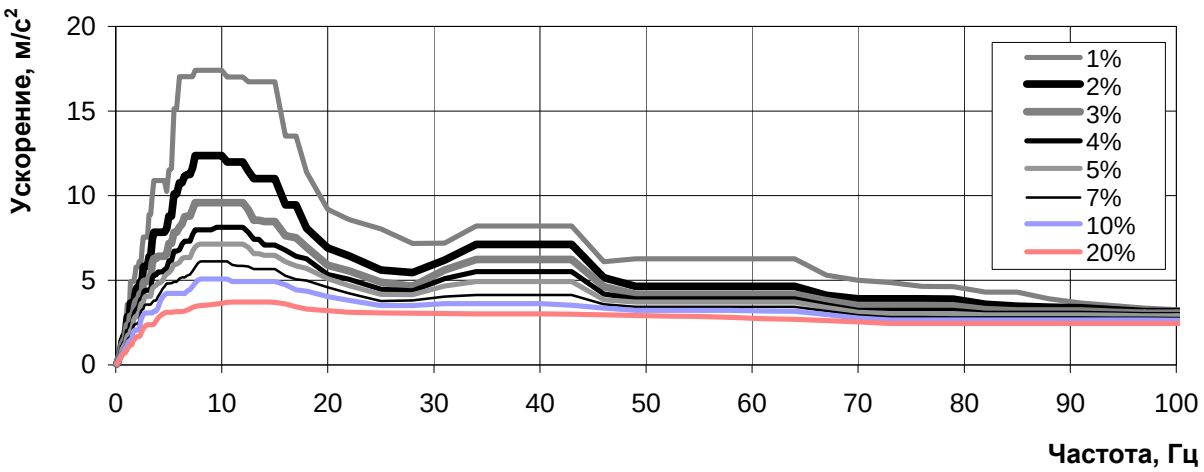

a) on horizontal axis x (ZPA = 2,32 m/s2)

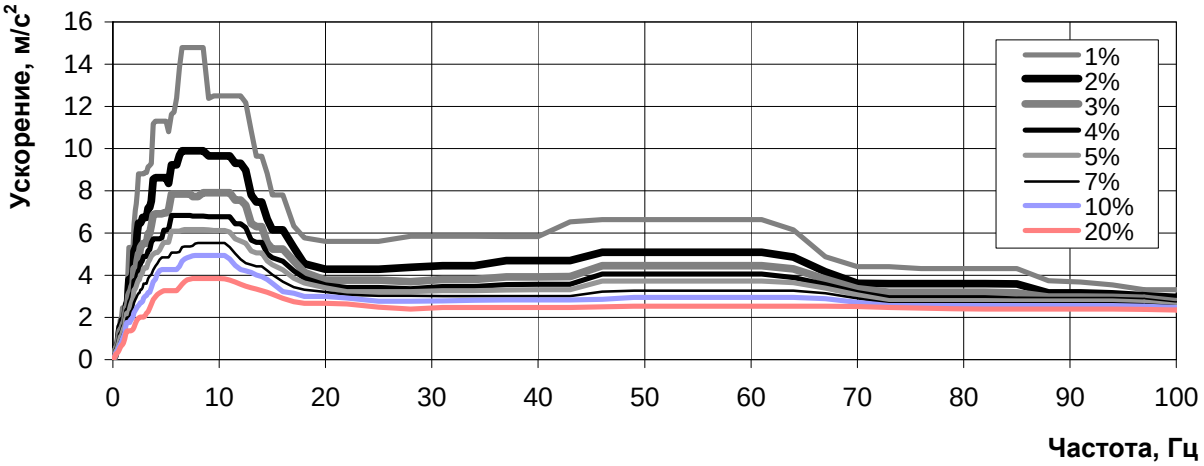

b) on horizontal axis y (ZPA = 2,21 m/s2)

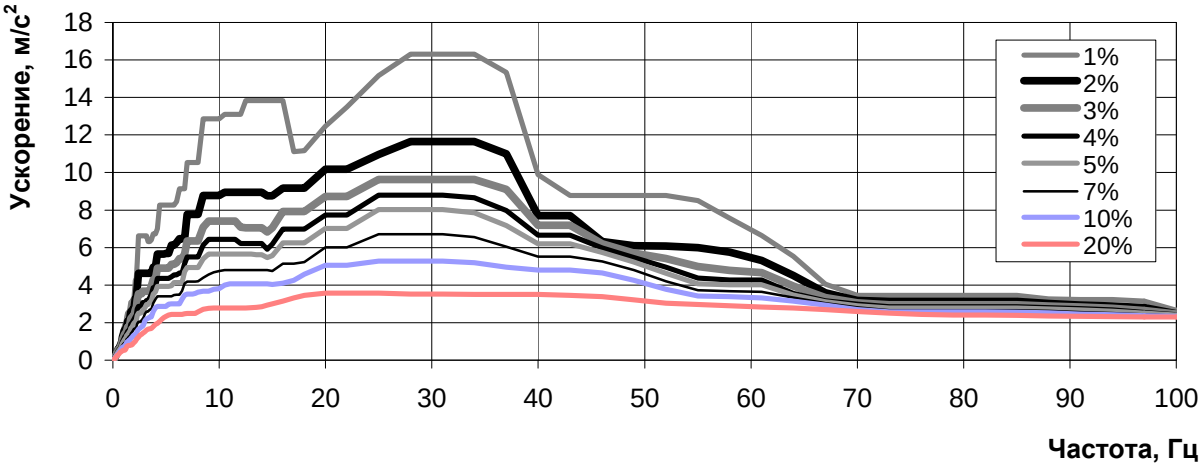

c) on vertical axisz (ZPA = 2,18 m/s2)

Figure 5.9 – Structure 31UQZ, 41UQZ. Generalized floor-wise response spectra under seismic load of SSE level. Slab. Elevation+ 6,150

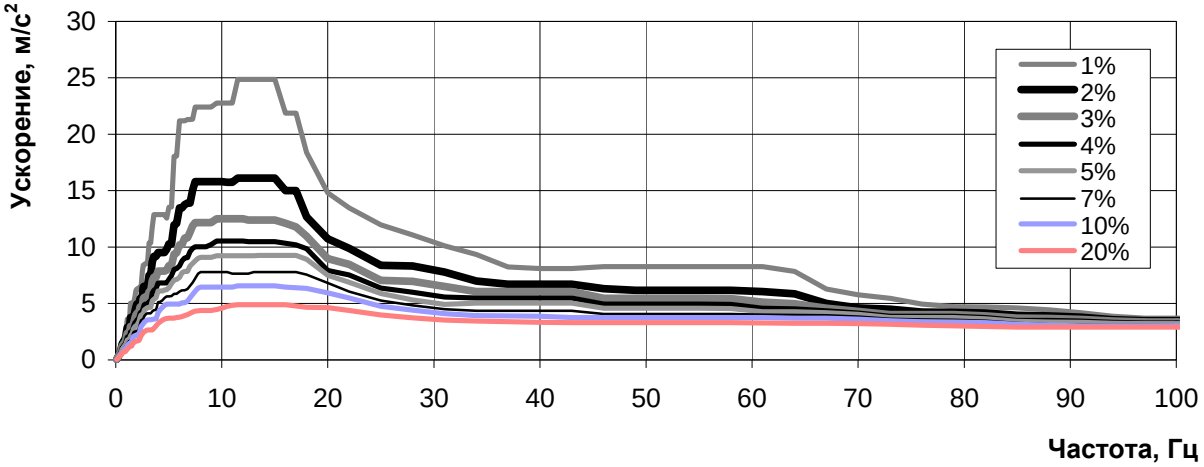

a) on horizontal axis x (ZPA = 2,85 m/s^2)

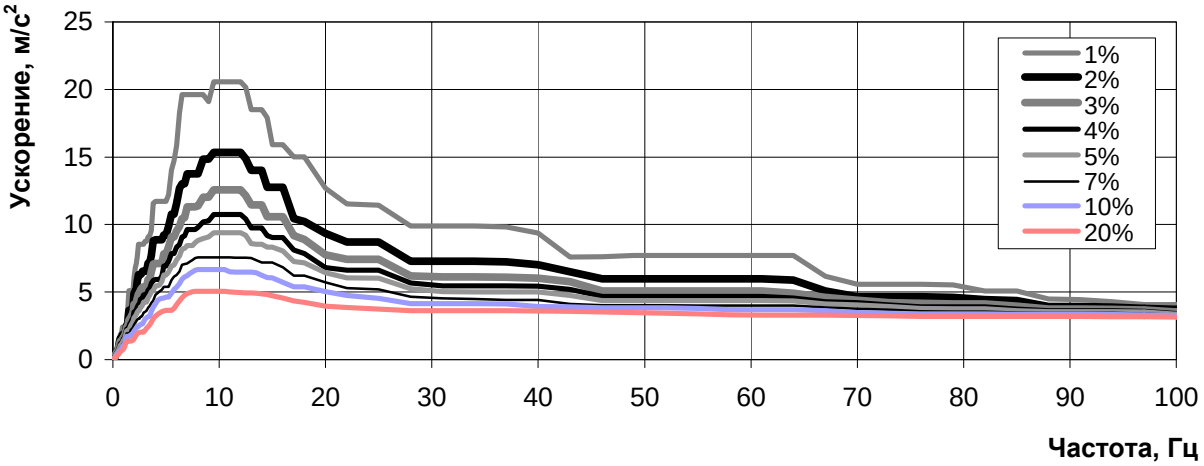

b) on horizontal axis y (ZPA = 3,02 m/s^2)

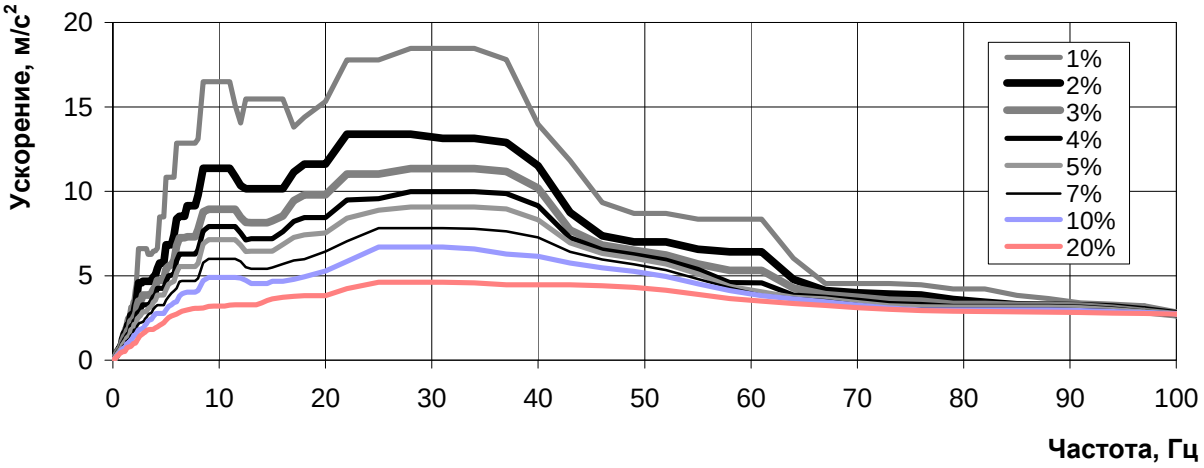

c) on vertical axis z (ZPA = 2,49 m/s^2)

Figure 5.10 – Structure 31UQZ, 41UQZ. Generalized floor-wise response spectra under seismic load of SSE level. Slab. From elevation + 4,900 to + 6,000.

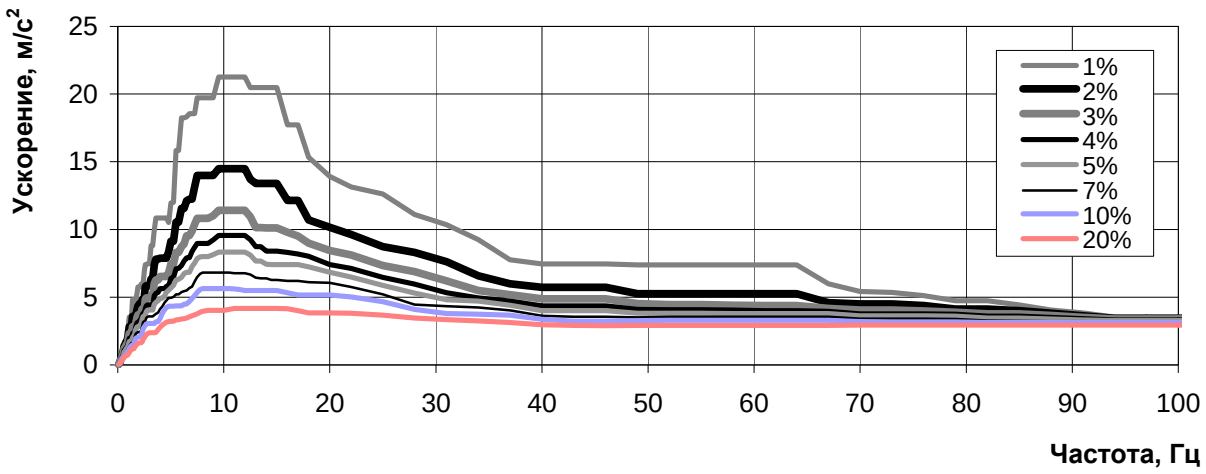

a) on horizontal axis x (ZPA = 2,48 m/s^2)

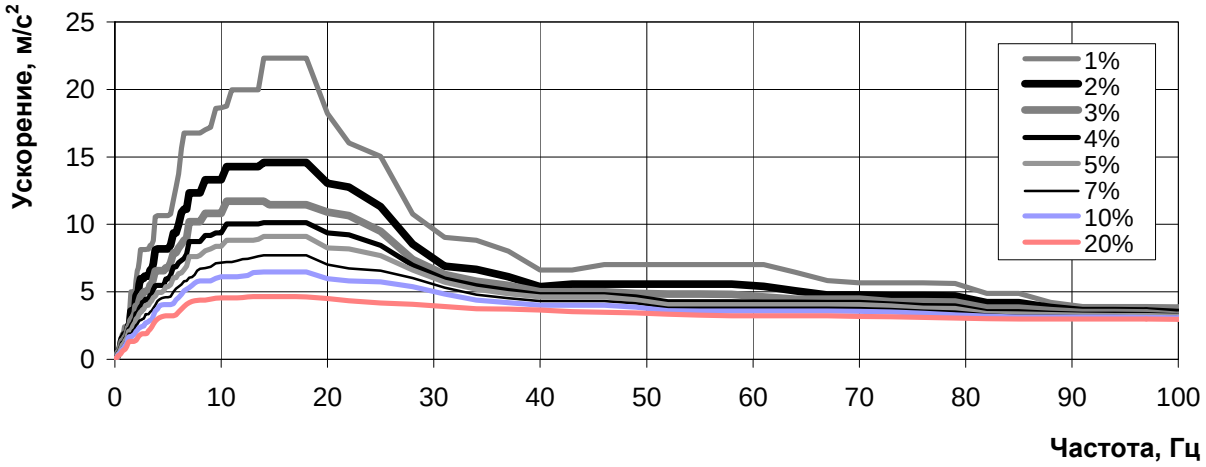

b) on horizontal axis y (ZPA = 2,93 m/s^2)

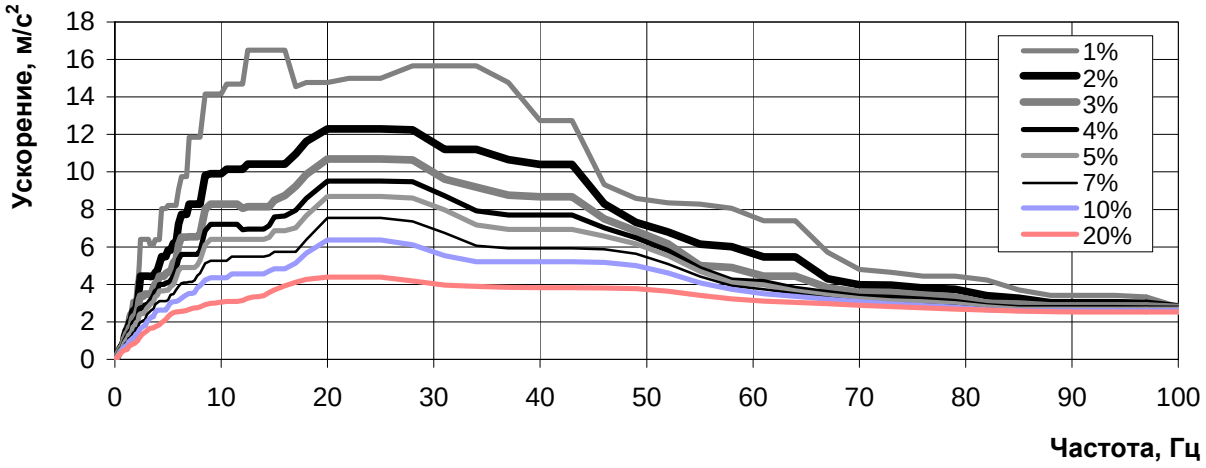

c) on vertical axisz (ZPA = 2,29 m/s^2)

Figure 5.11 – Structures 31UQZ, 41UQZ. Generalized floor-wise response spectra under seismic load of SSE level. Slab. Elevation+ 7,300

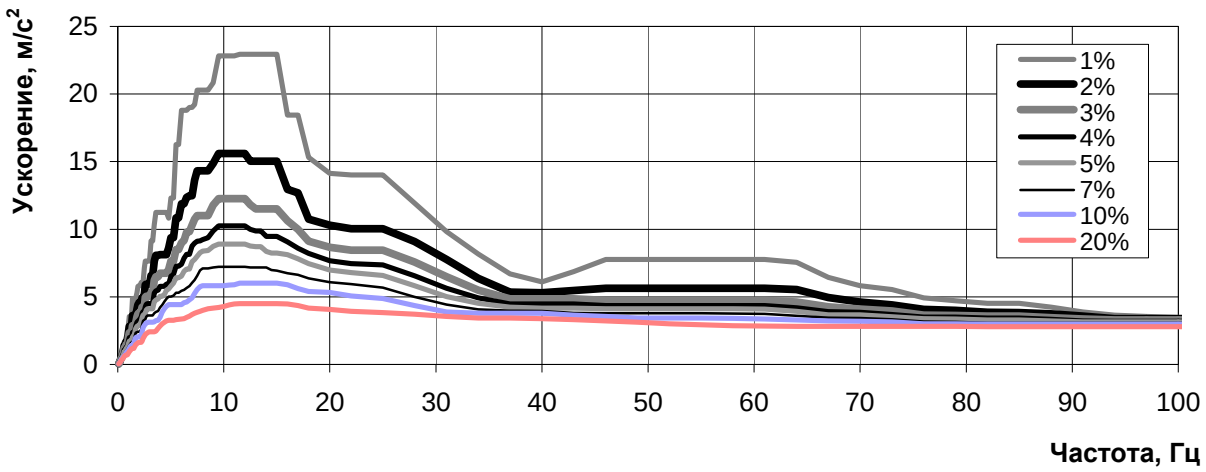

a) on horizontal axis x (ZPA = 2,63 m/s^2)

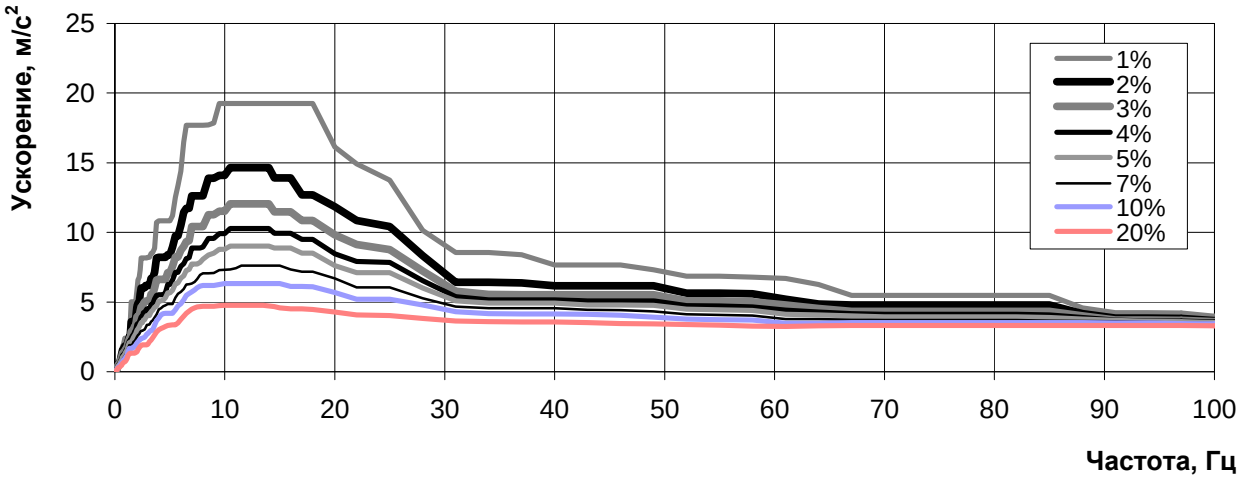

b) on horizontal axis y (ZPA = 2,94 m/s^2)

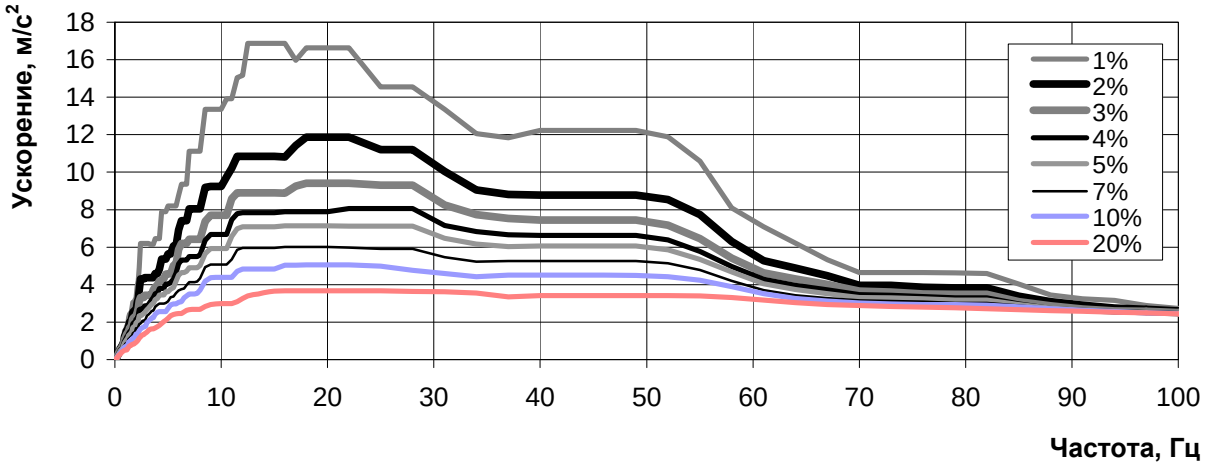

c) on vertical axis z (ZPA = 2,29 m/s^2)

Figure 5.12 –Structures 31UQZ, 41UQZ. Generalized floor-wise response spectra under seismic load of SSE level. Slab. From elevation + 8,300 to + 9,000

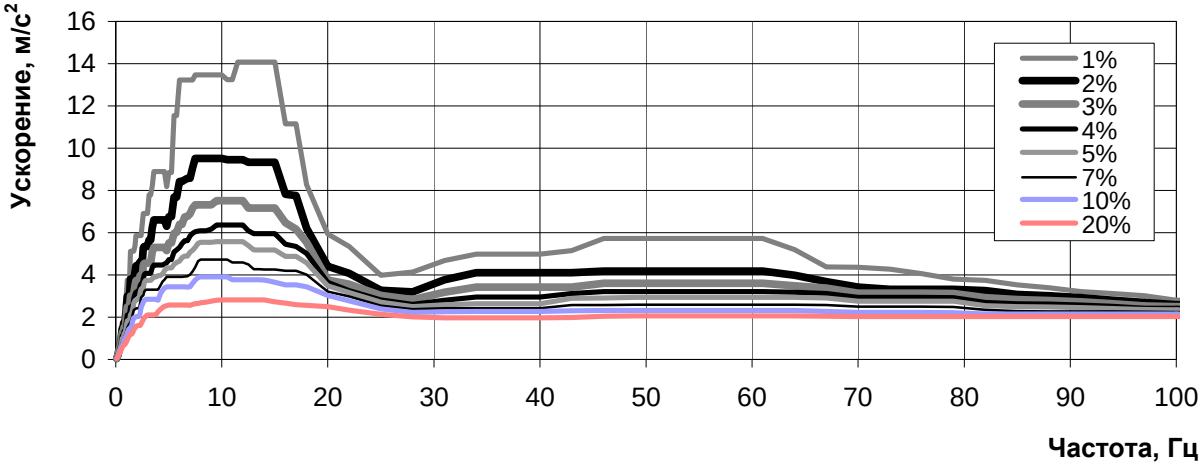

a) on horizontal axis x (ZPA = 1,84 m/s^2)

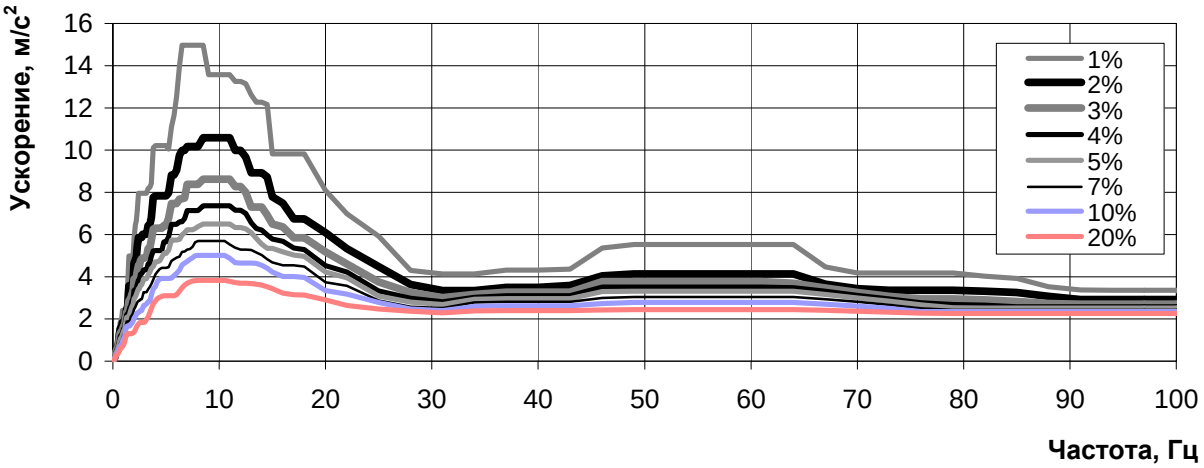

b) on horizontal axis y (ZPA = 2,20 m/s^2)

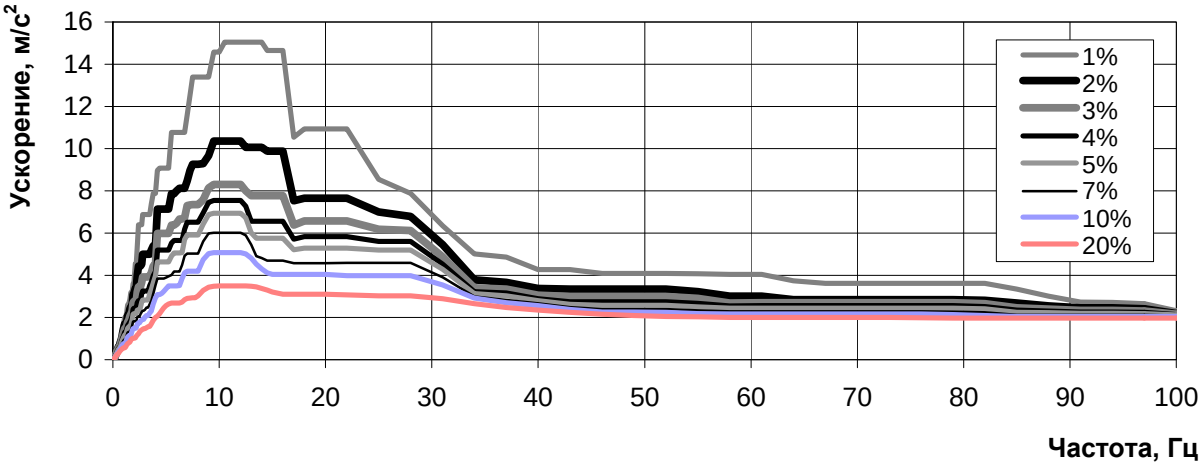

c) on vertical axisz (ZPA = 1,87 m/s2)

Figure 5.13 – Structures 31UUQ, 41UUQ. Generalized floor-wise response spectra under seismic load of SSE level. Slab. Elevation+ 3,400

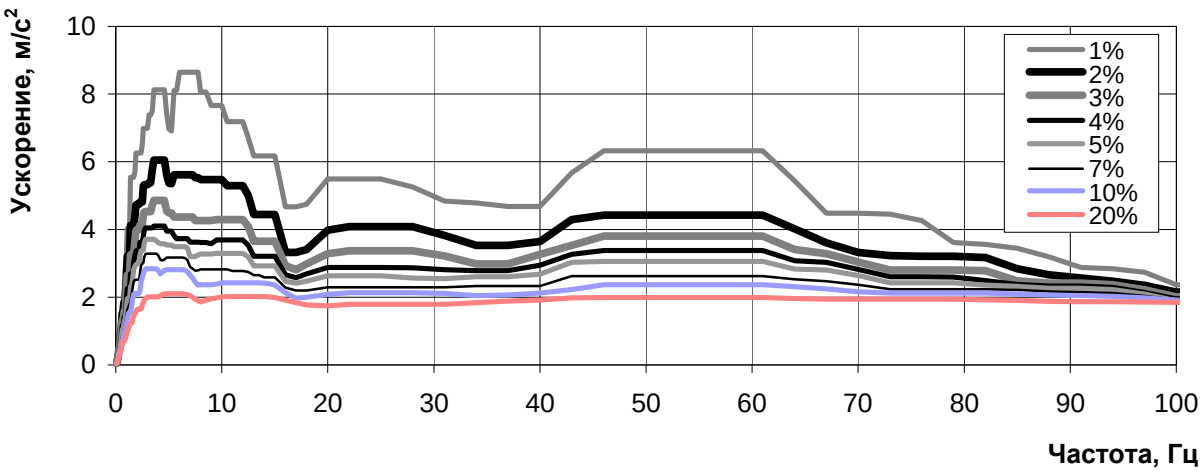

a) on horizontal axis x (ZPA = 1,62 m/s^2)

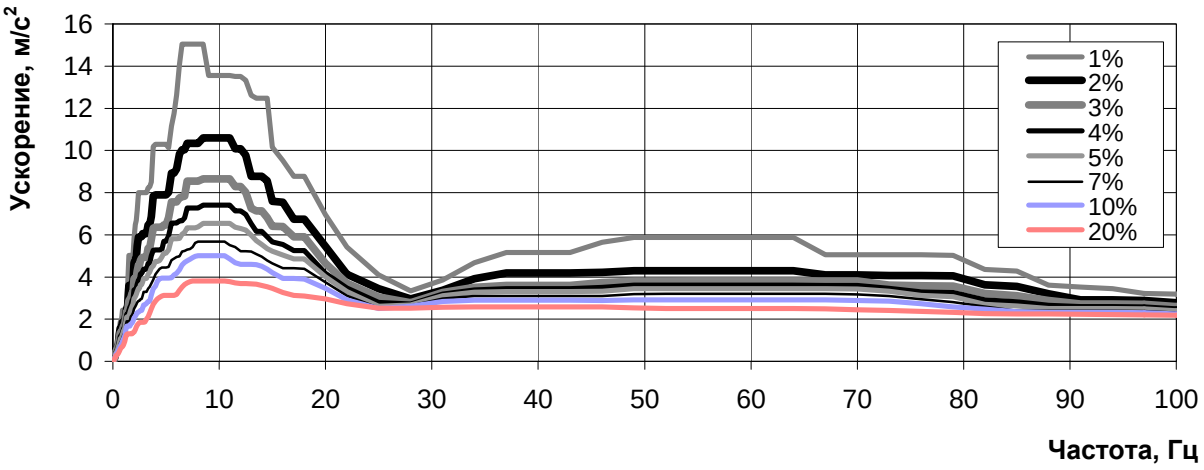

b) on horizontal axis y (ZPA = 2,12 m/s^2)

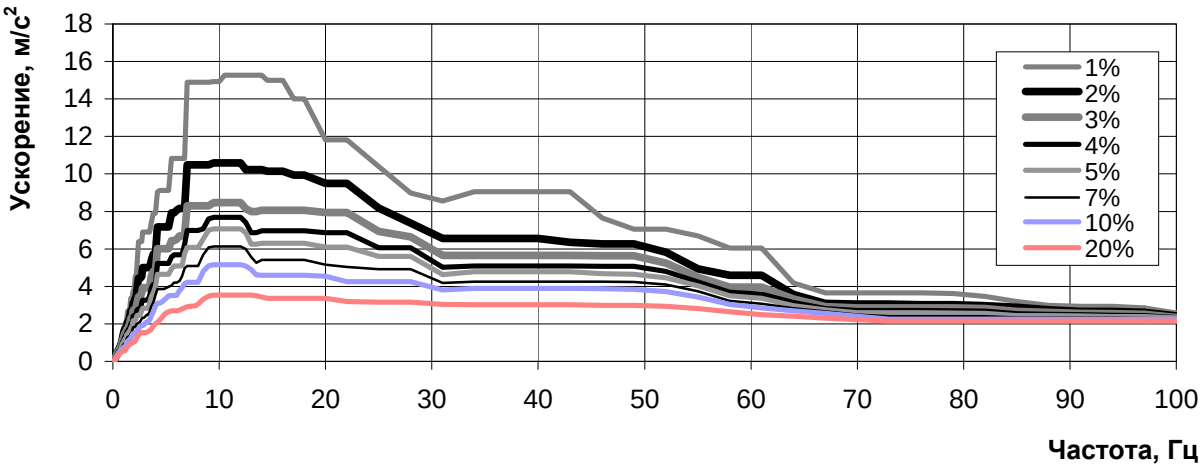

c) on vertical axisz (ZPA = 1,96 m/s2)

Figure 5.14 – Structures 31UUQ, 41UUQ. Generalized floor-wise response spectra under seismic load of SSE level. Slab. Elevation+ 7,600

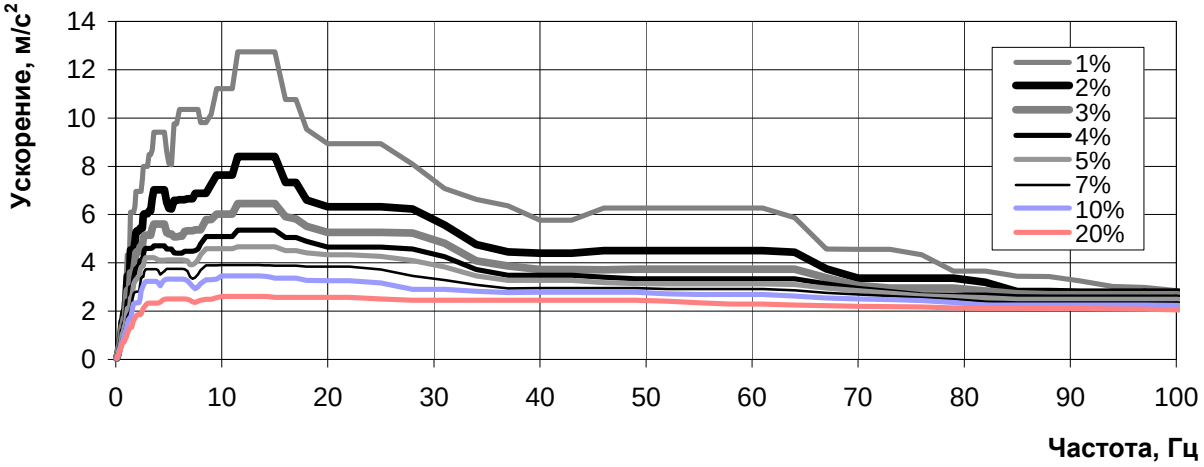

a) on horizontal axis x (ZPA = 1,85 m/s^2)

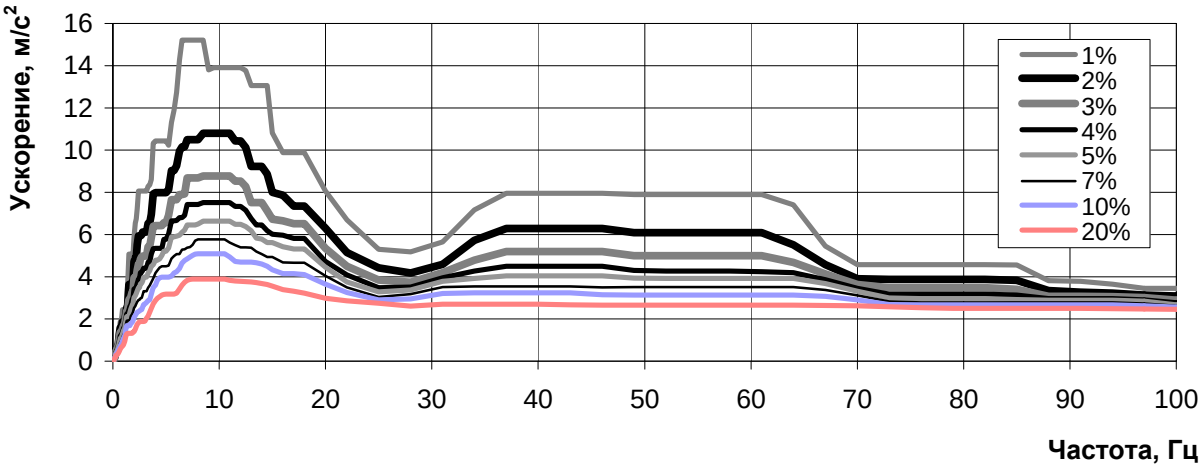

b) on horizontal axis y (ZPA = 2,30 m/s^2)

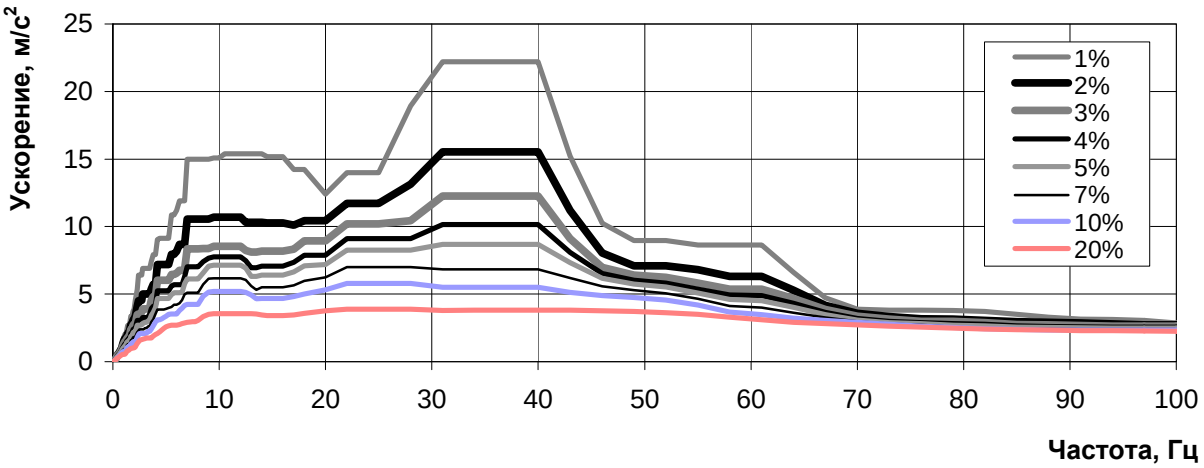

c) on vertical axisz (ZPA = 2,17 m/s^2)

Figure 5.15 – Structure 31UUQ, 41UUQ. Generalized floor-wise response spectra under seismic load of SSE level. Slab. Elevation+ 12,200

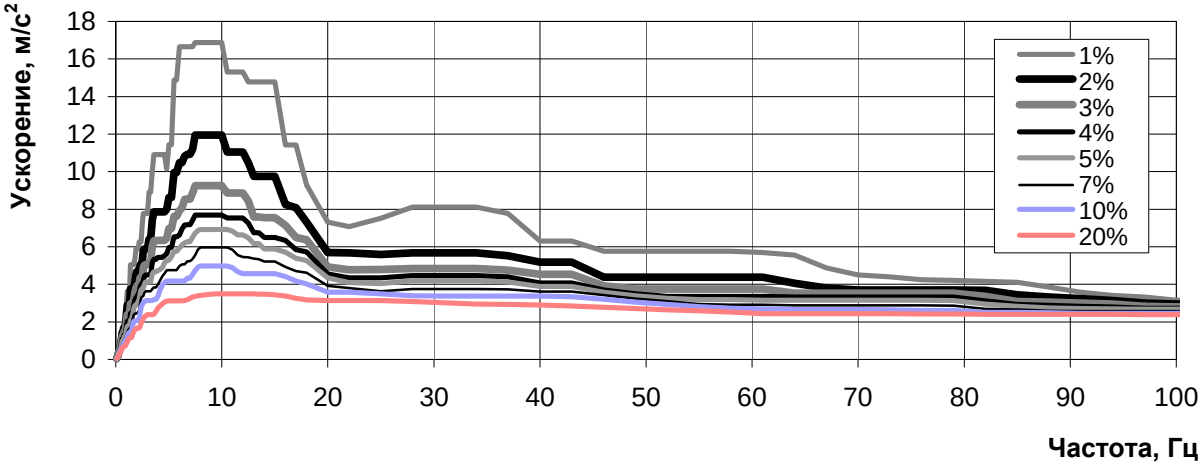

a) on horizontal axis x (ZPA =2,25 m/s^2)

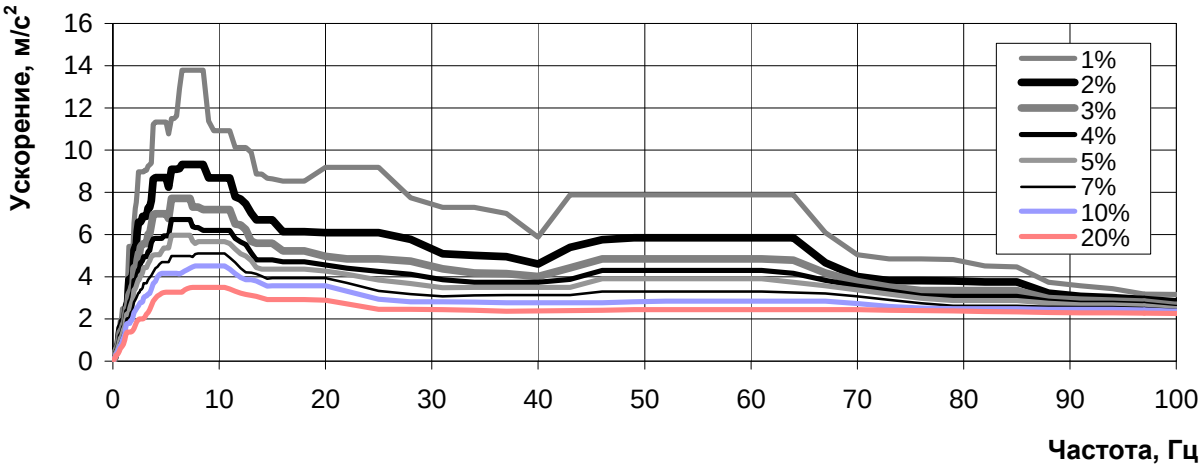

b) on horizontal axis y (ZPA = 2,12 m/s^2)

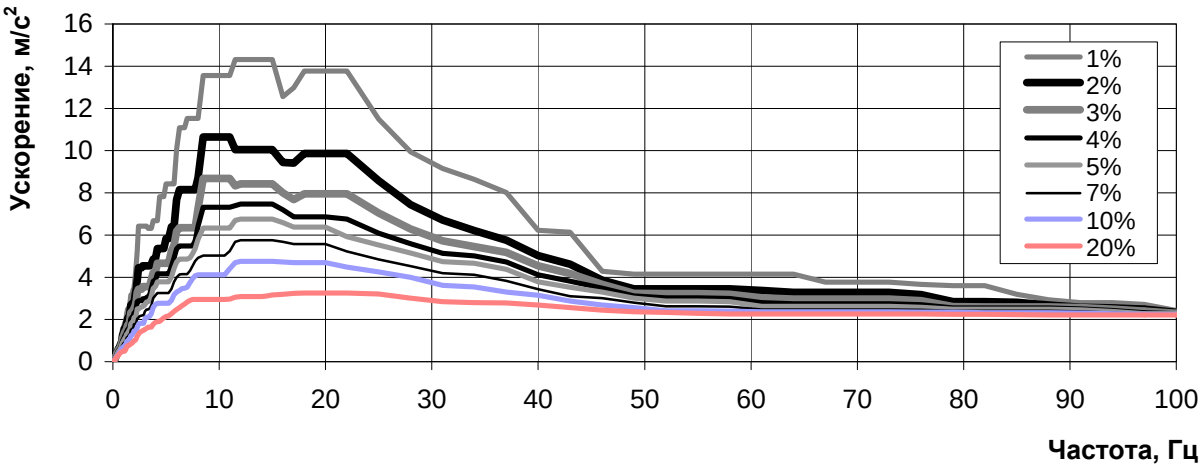

c) on vertical axis z (ZPA = 2,21 m/s^2)

Figure 5.16 – Structures 32UUQ, 42UUQ. Generalized floor-wise response spectra under seismic load of SSE level. Slab. Elevation+ 7,100

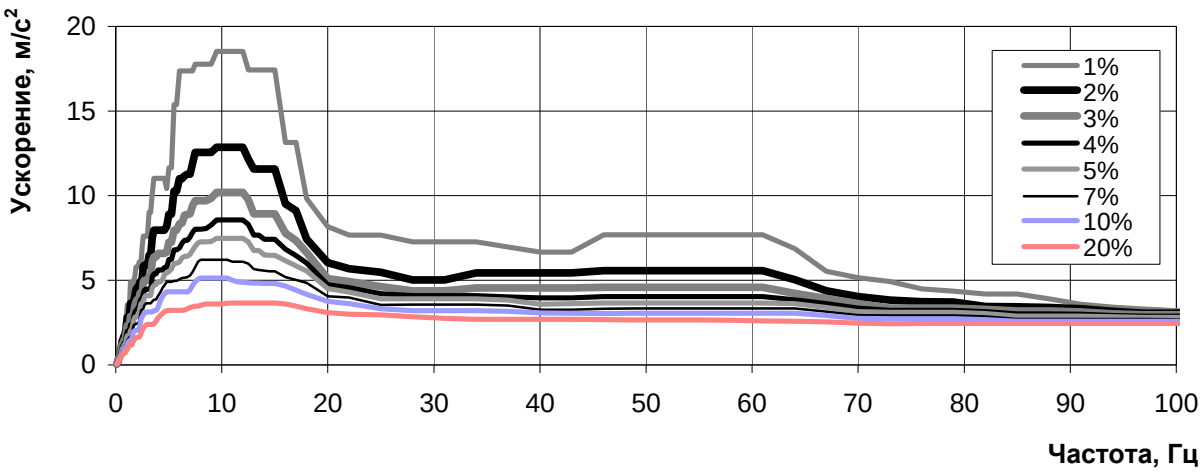

a) on horizontal axis x (ZPA = 2,25 m/s^2)

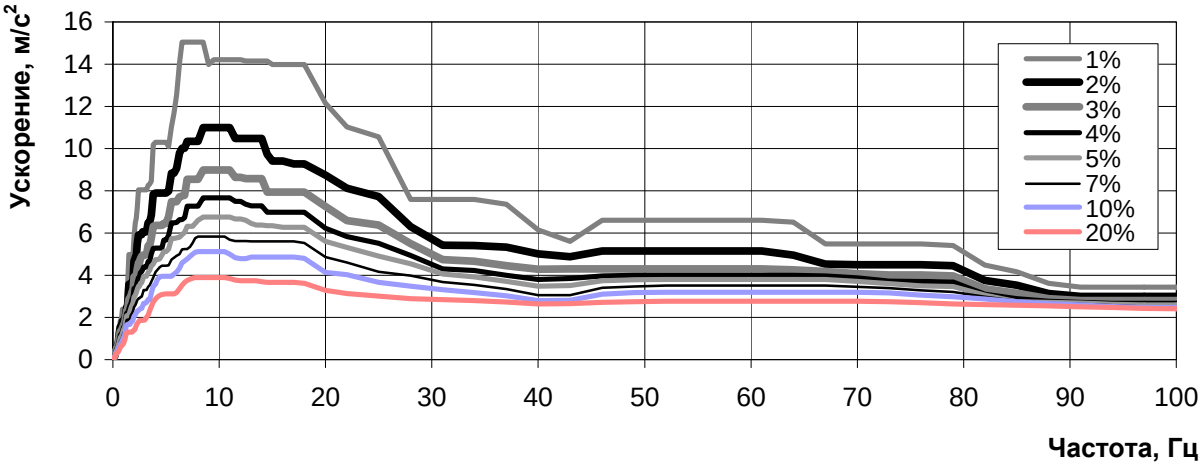

b) on horizontal axis y (ZPA = 2,39 m/s^2)

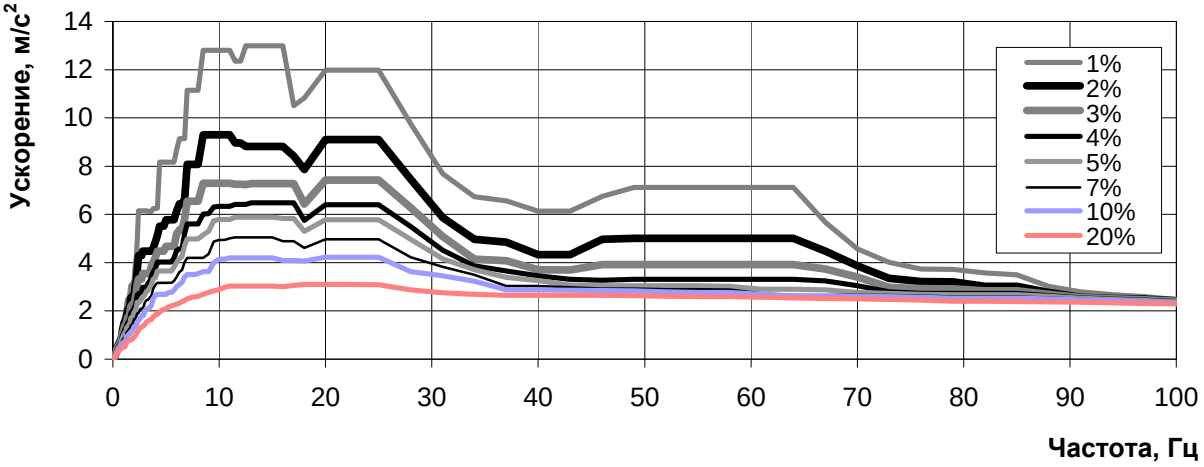

c) on vertical axisz (ZPA = 2,14 m/s^2)

Figure 5.17 – Structure 33UUQ, 43UUQ. Generalized floor-wise response spectra under seismic load of SSE level .Slab. Elevation+ 7,500

ANNEXURE-III

NUCLEAR POWER CORPORATION OF INDIA LTD
(A Government of India Enterprise)

SPECIFICATION NO: PP-P-1819

TECHNICAL SPECIFICATION
ON
METHODS AND PROCEDURES FOR SEISMIC QUALIFICATION OF VALVES; PANELS, DEVICES; ROTATING AND RECIPROCATING EQUIPMENTS; TANKS, VESSELS AND SUPPORTS
REF. USI NO : 01400

REVISION NO.	:	0	1			
DATE OF ISSUE (MONTH/YEAR)	:	OCT 2012	JUNE 2014			
TOTAL NO. OF PAGES (Including Cover Sheet)	:	33	61			

ORIGINAL

PREPARED	BY:	Shri Varun Mishra (Engr)	Sd/-	30.10.12
		Shri Faisal Dastageer (EE)	Sd/-	30.10.12
		Shri Anshuman Singh (EE)	Sd/-	30.10.12
		Shri Rahul Mittal (EE)	Sd/-	30.10.12
		Shri Santosh Khandave (SEE)	Sd/-	30.10.12
		Shri Rishi Sharma (SEE)	Sd/-	30.10.12
CHECKED	BY:	Shri Vijay Chaudhry (SEE)	Sd/-	30.10.12
		Shri Santosh Kumar (DCE)	Sd/-	30.10.12
		Shri U.P. Singh (ACE)	Sd/-	30.10.12
		Shri S.D. Bhawsar (ACE)	Sd/-	30.10.12
REVIEWED	BY:	Shri Rajesh Mishra (SO/G)	Sd/-	30.10.12
		Shri S.M. Ingole (ACE)	Sd/-	30.10.12
APPROVED	BY:	Shri A.G. Chhatre (ED, Engg-Reactor)	Sd/-	30.10.12
		(Name & Designation)	(Signature)	(Date)

(For Revisions See Revision Control Sheet)

File Name: PP_P_1819_R1.doc

REVISION CONTROL SHEET

DOCUMENT TYPE : TECHNICAL SPECIFICATION

No. : PP-P-1819

TITLE : TECHNICAL SPECIFICATION ON METHODS AND PROCEDURES FOR SEISMIC QUALIFICATION OF VALVES; PANELS, DEVICES; ROTATING AND RECIPROCATING EQUIPMENTS; TANKS, VESSELS, AND SUPPORTS

REV NO. DATE	DESCRIPTION OF REVISION	REVISED BY	CHECKED BY	REVIEWED BY	APPROVED BY
Rev-01 June 2014	Revised based on recommendations of Task force constituted by ED (Engg.) for revision of PP-P 1819 vide letter No. NPCIL(HQ)/ED(ENGG.)/00000/M/2013/01 dated 22/01/13	Singh 30.06.2014 Anshuman Singh, SEE (ED & SA III and S)	SDBhawsar 30/6/2014 S.D.Bhawsar, ACE (ED & SA III and S)	30/6/2014 S.M.Ingole, CE (ED & SA III and S)	A.K.Balasu 30/06/2014 A.K. Balasubrahmanian AD (RC & SA&S)

NPCIL PROPRIETARY

This document is the property of Nuclear Power Corporation of India Limited. No exploitation or transfer of any information contained herein is permitted in the absence of an agreement with N.P.C.I.L. and neither the document nor any such information may be released without the written consent of N.P.C.I.L.

1.0 CONTENTS

The specification has been presented under the following Sections and Annexures:

Section	Title
1	Contents
2	Scope
3	Definitions
4	Introduction
5	Applicable codes and standards
6	Qualification methods and procedures.
7	Specification for qualification of valves.
8	Specification for qualification of panels and devices.
9	Specification for qualification of rotating and reciprocating equipment
10	Specification for qualification of tanks, vessels, heat exchanger and their supports.

Annexure-1	Load Combinations for Design Condition and Service Levels for Equipment and Supports
Annexure-2	General design guideline for equipment
Annexure-3	List of shake table test facilities in India
Annexure-4	Static side load test
Annexure-5	Sample Seismic Test Procedure for Valve/Valve actuator/ Instrument/Device
Annexure-6	Impact Hammer Test for Frequency Determination of Valves

2.0 SCOPE

This specification describes methods and procedures for seismic qualification of Structures, Systems and Components (SSC) of a nuclear power plant. The methods and procedures described in section 6 are applicable to all SSC of a NPP. However, detailed procedures for seismic qualification of certain equipment viz. valves; electrical and Instrumentation & control equipment; rotating and reciprocating equipment; passive systems/equipment like tanks, vessels and heat exchangers are described in sections 7,8,9 & 10 of this specification. Qualification of primary civil structures and piping are excluded from the scope of this specification.

3.0 DEFINITIONS

3.1 Cut-off Frequency: The frequency in the response spectrum where the Zero Period Acceleration asymptote essentially begins. This is the frequency beyond which the single-degree-of-freedom oscillators exhibit very little or no amplification of motion and indicates the upper limit of the frequency content of the waveform being analyzed.

3.2 Damping: An energy dissipation mechanism that reduces the amplification and broadens the vibratory response in the region of resonance. Damping is usually expressed in terms of percentage of critical damping. Critical damping is defined as the least amount of viscous damping that causes a SDOF system to return to its original position without oscillation after initial disturbance.

3.3 Design Condition: The design conditions include those pressure, temperature, and mechanical loadings selected as the basis for the design of systems, structures or components within a facility.

3.4 Design Basis Events: The set of events which serves as part of the basis for the establishment of design requirements for systems, structures and components within a facility. Design basis events (DBEs) include normal operations, operational transients and certain accident conditions under postulated initiating events (PIE) considered in the design of the facility.

3.5 Level A Service Limits (Normal Operating Conditions): Level A Service Limits are those sets of limits that must be satisfied for all Level A Service Loadings identified in the Design Specifications to which the component or support may be subjected in the performance of its specified service function.

Normal Operation of a plant or equipment within specified operational limits and conditions. In case of a nuclear power plant, this includes, start-up, power operation, shutting down, shutdown state, maintenance, testing and refuelling.

3.6 Level B Service Limits (Upset Conditions): Level B Service Limits are those sets of limits that must be satisfied for all Level B Service Loadings identified in the Design Specifications for which these Service Limits are designated. The component or support must withstand these loadings without damage requiring repair.

All operation processes deviating from normal operation which are expected to occur once or several times during the operating life of plant that and which, in view of appropriate design provisions do not cause any significant damage to items important to safety nor lead to accident conditions.

3.7 Level C Service Limits (Emergency Condition): Level C Service Limits are those sets of limits that must be satisfied for all Level C Service Loadings identified in the Design Specifications for which these Service Limits are designated. These sets of limits permit large deformations in areas of structural discontinuity that may necessitate the removal of the component or support from service for inspection or repair of damage to the component or support. Level-C service Loadings has a low probability of occurrence.

3.8 Level D Service Limits (Faulted Condition): Level D Service Limits are those sets of limits that must be satisfied for all Level D Service Loadings identified in the Design Specifications for which these Service Limits are designated. These sets of limits permit gross general deformations with some consequent loss of dimensional stability and damage requiring repair, that may require removal of the component or support from service. Level-D service Loadings has extremely low probability of occurrence.

3.9 Response spectrum: A plot of the maximum response, as a function of oscillator frequency, of an array of Single Degree Of Freedom (SDOF) damped oscillators subjected to the same base excitation.

3.10 Required Response Spectrum (RRS): The response spectrum issued by the user or the user‟s agent as part of the specifications for qualification or artificially created to cover future applications. The RRS constitutes a requirement to be met for seismic qualification of equipment by shake table testing.

3.11 Rigid Equipment: Equipment, structures, and components whose lowest natural frequency is greater than the cut-off frequency on the response spectrum.

3.12 Seismic Anchor Movement (SAM): Seismic anchor movement (or “SAM”) is the differential motion between pipe support attachment points (for example,

supports attached to an upper floor would sway with the building, with a larger amplitude than supports attached at a lower elevation), or the differential motion between equipment nozzles and pipe supports. Seismic anchor movements are input as displacements (translations and rotations) at the support attachments or at equipment nozzles. The resulting stresses and loads in the piping system are then combined by square root sum of the squares (SRSS) to the stress and loads due to inertia.

3.13 **S1 Level Earthquake - Operating Basis Earthquake (OBE)**: An earthqauke which, considering the regional and local geology and seismology and specific characteristics of local sub-surface material, could reasonably be expected to affect the plant site during the operating life of plant. The features of nuclear power plant necessary for continued safe operation are designed to remain functional, during and after the vibratory ground motion caused by this earthquake.

3.14 **S2 Level Earthquake - Safe Shutdown Earthquake (SSE)** : The earthquake which is based upon an evaluation of the maximum earthquake potential considering the regional and local geology and seismology and specific characteristics of local sub-surface material. It is that earthquake which produces the maximum vibratory ground motion for which certain structures, systems and components are designed to remain functional. These structures, systems and components are those which are necessary to assure

a) The integrity of reactor coolant pressure boundary; or
b) The capability to shutdown the reactor and maintain it in a safe shutdown condition; or
c) The capability to prevent the accident or to mitigate the consequences of accidents which could result in potential off-site exposures higher than the limits specified by the Regulatory Body; or
d) The capacity to remove residual heat.

3.15 **Seismic Category-1** : Seismic category-1 shall includes all SSCs

a) Whose failure could directly or indirectly cause accident conditions, or
b) Which are required for shutting down the reactor, monitoring critical parameters, maintaining it in a safe shutdown condition and removing decay heat on a long term basis, or
c) Which are required to prevent radioactive releases or to maintain release below limits established by AERB for accident conditions(e.g. containment system).

All seismic category-1 structures, systems and components should be designed or qualified for both S1 (OBE) and S2 (SSE).

3.16 **Seismic category-2** : Seismic category-2 shall includes all SSCs which are required to:

a) Prevent the escape of radioactivity beyond the limits prescribed for normal operation and not covered in category-1, or
b) Mitigate those accident conditions which last for such long periods that there is a reasonable likelihood of an earthquake of the defined severity occurring during this period and not covered in category-1.

All seismic category-2 structures, systems and components shall have demonstrated capability to withstand the effects of S1 (OBE).

3.17 **Seismic category-3**: Seismic category-3 includes SSCs which are not important to safety and those not covered in category 1 or 2.

3.18 **Test response spectrum (TRS)** : The response spectrum that is developed from the actual time history motion given to the shake table.

3.19 **Zero Period Acceleration (ZPA)**: The acceleration level of the high frequency, non amplified portion of the response spectrum. This acceleration corresponds to the maximum peak acceleration of the time history used to derive the response spectrum.

4.0 INTRODUCTION:

A Nuclear Power Plant (NPP) has variety of Structures, Systems and Components (SSC) comprising primary civil structures and secondary structures, systems and components viz., tanks, vessels, heat exchangers, piping, supports; valves; pumps, fans, blowers, motors; compressors, diesel generators, reciprocating pumps; instrumentation and electrical panels, instrumentation and electrical devices, reactor control and shutdown devices, etc. These NPP structures, systems and components are designed and qualified for various service conditions viz. design, normal, upset (pressure, temperature, mechanical, transients), emergency, faulted (pressure, mechanical) and test conditions as applicable, including natural phenomenon like earthquake. The seismic design considers two levels of earthquake i.e. Operating Basis Earthquake OBE (S1) alone or OBE (S1) and Safe Shutdown Earthquake SSE (S2) as specified. Design of structures, systems and components for dead weight, sustained loads, pressure and temperature and mechanical loads is a standard industrial design practice. However, seismic design is a special branch of engineering and has been specifically dealt within this specification.

The General guidelines for seismic design are given in Annexure-2.

As specified in the NPCIL"s equipment specifications, for the qualification of an equipment, following requirements shall be met:

i) Structural integrity and pressure boundary integrity
and
ii) Intended functional operability as applicable.

The seismic qualification of structures, system and components should establish that the structures, systems or components perform their intended safety functions during and after the specified earthquake(s). The examples of safety functions are structural integrity, degree of leak tightness, mechanical or electrical functional operability, preservation of geometrical dimensions or combination of these and any other specified function related to the specific structure, system or component under consideration. The seismic analysis should be based on clear understanding of the functions which should be assured during or after the specified earthquake(s).

Various structures, systems and components are classified into either seismic category 1 or seismic category 2 or seismic category 3. Items in category 1 should be designed for both S1 (OBE) and S2 (SSE) level earthquake ground motions. Items in category 2 should be designed for S1 (OBE) level earthquake ground motions. Seismic category 3 items should be designed for earthquake resistance according to the National practice. Loads during normal operation, anticipated operational occurrences, and loads during accident conditions should be combined with specified seismic loads as applicable. The allowable limits for stresses and

deformations under different load combinations should be used to assess the safety function and design intent as per the applicable code or specification of the structure, system and component.

For passive equipment viz., tanks, vessels, heat exchangers and supports qualification requirement are structural integrity and pressure boundary integrity. However, for active equipment viz., valves; pumps, fans, blowers, motors; compressors, diesel generators; electrical and instrumentation panels and devices involving mechanical motion, the qualification requirements shall also include functional operability.

This specification covers the procedure for qualification of secondary support structures, systems and components except civil structures, piping, to meet the above qualification requirements. For an equipment any specific requirement, other than the general requirement specified in the code shall also be met.

5.0 APPLICABLE CODES AND STANDARDS

Applicable codes and standards for design and qualification of various structures, systems and equipment are given below.

5.1. ASME Boiler and Pressure Vessel code, Section-III, Division-1, Subsection NB, Class 1 components, 2012.

5.2. ASME Boiler and Pressure Vessel code, Section-III, Division-1, Subsection NC, Class 2 components, 2012.

5.3. ASME Boiler and Pressure Vessel code, Section-III, Division-1, Subsection ND, Class 3 components, 2012.

5.4. ASME Boiler and Pressure Vessel code, Section-III, Division-1, Subsection NF, Component Supports, 2012.

5.5. ASME Boiler and Pressure Vessel code, Section-III, Division-1, Appendices, 2012.

5.6. ASME Boiler and Pressure Vessel code, Section-VIII, Pressure Vessels, Division 1, 2012.

5.7. ASME Boiler and Pressure Vessel code, Section-VIII Pressure Vessels, Division 2, Alternative Rules 2012.

5.8. ASME/ANSI B-31.1, Code for Power Piping, 2010

5.9. ASME Boiler and Pressure Vessel code section II, Material Specifications, 2012.

5.10. ACI 349-85, Code Requirements for Nuclear Safety Related Concrete Structures and commentary ACI-349 R-85, 1985.

5.11. ASCE 4-98, Seismic Analysis of safety related nuclear structures and commentary on standard for seismic analysis of safety related nuclear structures, 1998.

5.12. IS-800, Code of practice for use of structural steel in general building construction, 2007.

5.13. IS-456, Code of practice for plain and reinforced concrete, 2000.

5.14. Mechanical standard TEMA, class C, 2007.

5.15. Welding Research council bulletin WRC 107, Local stresses in spherical and cylindrical shells due to external loading, 2002.

5.16. Welding Research Council bulletin WRC 297, Local stresses in cylindrical shells due to external loading on nozzle, 1987.

5.17. Combined modal response and spatial components in seismic response analysis USNRC RG 1.92, 2006.

5.18. USNRC RG 1.100 revision 3 "Seismic Qualification of Electrical & Active Mechanical equipment and Functional Qualification of Active Mechanical equipment for Nuclear Power Plants", September 2009.

5.19. Paper on response combination by R.P.Kennedy, NUREG 1061 Vol. 4, Appendix A of SMA 1211.02.R2.0, March 1984.

5.20. NUREG/CR-6241, BNL-NUREG-52422, Technical guidelines for Aseismic design of Nuclear Power Plants, 1994.

5.21. IEEE Std-344, IEEE recommended practice for seismic qualification of Class 1E equipment for nuclear power generating stations, 2013.

5.22. IEEE Std-382, IEEE standard for qualification of actuators for power operated valve assemblies with safety related function for Nuclear Power Plants, 2006.

5.23. IEC-60780, Nuclear Power Plants – Electrical equipment of the safety system qualification, 1998.

5.24. IEC-60980, Recommended practice for seismic qualification of electrical equipment of the safety system for nuclear generating stations, 1998.

5.25. ASME QME 1-2007 Qualification requirements for active mechanical equipment for nuclear power plants, 2012.

5.26. IAEA Safety Guide 50-SG-S2, Seismic analysis and testing of Nuclear Power Plants, 1980.

5.27. IEEE C37.98-1987, IEEE standard Seismic Testing of Relays.

5.28. IS-1893, Criteria for earthquake resistant design of structures, 2002.

5.29. IEEE-693 - IEEE recommended practice for Seismic Design of sub-stations, 2005.

5.30. ACI-318/318 R-95: Building Code Requirement for Structural Concrete and Commentary.

5.31. IEEE-420 – IEEE Standard for design of class 1E Electrical Boards, Panels, Racks, 2001.

5.32. AERB Guide No. AERB/NPP-PHWR/SG/D-23 Seismic Qualification of Structures, Systems and Components of Pressurised Heavy Water Reactors, 2009.

5.33. AERB SAFETY GUIDE NO. AERB/NPP-PHWR/SG/D-1 Safety Classification and Seismic Categorisation for Structures, Systems and Components of Pressurised Heavy Water Reactors, 2003.

5.34. USNRC RG 1.29 Revision 3 "Seismic Design Classification", September 1978.

5.35. USNRC RG 1.26 Revision 4 "Quality Group Classifications and Standards for Water, Steam and Radioactive Waste Containing Components of Nuclear Power Plants", March 2007.

5.36. IEEE-323 – IEEE Standard for qualifying class 1E Equipments for Nuclear Power Generating Station, 2001.

5.37. U.S. Atomic Energy Commission, "Nuclear Reactors and Earthquakes", TID-7024, Washington, D.C., 1963.

5.38. Program on technology innovation, "The effects of high frequency ground Motion on structures, components, and Equipment in nuclear power plants" EPRI, June 2007.

5.39. EPRI Draft White Paper, "Considerations for NPP Equipment and Structures Subjected to Response Levels Caused by High Frequency Ground Motions", March 2007.

5.40. "Seismic Screening of Components Sensitive to High Frequency Vibratory Motions", EPRI White Paper, June 2007.

5.41. "Seismic Design and Retrofit of Piping Systems", ASCE, July2002.

5.42. "Seismic Evaluation Procedure for Equipment in US Department of Energy Facilities DOE/EH-0545, March 1997.

The codes and standards referred above or any of their latest revisions can be used in concurrence with NPCIL. The general requirements of other standards and codes or guides applicable for manufacture, design and qualification for specific equipment which are not listed above shall also be met. For example IEEE-387 guide for emergency diesel generator sets, IEEE-628 for cable trays, IS-9000 for environmental qualification of electrical & instrumentation etc.

6.0 SEISMIC QUALIFICATION METHODS AND PROCEDURES

The seismic qualification in terms of structural and pressure boundary integrity and /or functional operability as applicable can be performed by any of the following commonly used methods viz.,

a) Analysis
b) Testing
c) Analysis and Testing

These methods, or other justifiable methods, may be adequate to verify the ability of the SSC to meet the seismic qualification requirements. The choice should be based on the practicality of the method for the type, size, shape, complexity of the SSC configuration, whether safety function can be assessed in terms of structural integrity/pressure boundary integrity alone and/or in terms of functional operability.

6.1 Qualification for Structural and Pressure Boundary Integrity

Qualification of SSCs, whether passive or active, can be performed by analysis to assess their intended function in terms of structural integrity and pressure boundary integrity as per the requirements of governing code.

6.1.1 Qualification by Analysis using Simplified Method

Wherever feasible analytical methods using classical bending and direct stress equations, where free body diagram determine a simple stress distribution that is in equilibrium with applied loads may be used with prior approval from NPCIL. Empirical formulae and equations as given in relevant codes & guides for specified equipment may be used.

6.1.2 Qualification by Analysis using FEM

Qualification of SSCs are required to be performed for various loads viz., design loads, loads during normal and upset conditions (pressure, temperature, mechanical, cycles, transients), including OBE; loads during emergency and faulted conditions (pressure, mechanical) including SSE; test loads; etc. as specified in NPCIL"s equipment specification and in the Vendor"s General Equipment Specification (VGES).

The general steps involved to meet the qualification requirements are:

i) Preparation of the finite element model which represents the SSC adequately.

The guidelines on modeling are given in para 6.1.2.1

ii) Identification of the applicable loads.

iii) Determination the structural response for these loads in terms of forces, moments, displacements and stresses. The seismic response shall be determined by using response spectrum analysis/time history analysis/ equivalent static analysis method.

iv) Combination of the seismic responses with other operating stresses and displacements as per the load combinations given in Annexure-1.

v) Comparison of the combined stresses and displacements with those that ensure compliance with design/ codal requirements. The stresses and displacements shall be less than allowable values.

6.1.2.1 FEM Modeling

Seismic analysis of SSCs generally uses Finite Element (FE) methods. Most of the commercially available computer codes have the capability to perform the analysis. The following are some of the acceptable methods of modeling the SSC.

i. Finite Element Model using Beam or One-Dimensional Element

This modeling is typically applied to beams, columns, frames, ducts, cable trays, conduits, cabinets, storage racks, which are expressed as a continuous or one dimensional finite element in a two or three- dimensional space. Masses are represented by lumped parameters, which develop a diagonalised elemental mass matrix. Tanks, pressure vessels and heat exchangers can also be modelled this way, especially when using the equivalent static method.

ii. Finite Element Model using Plate & Shell Element

This type of modeling is adopted for items whose primary mode of failure is by biaxial bending stress, plane stress or plane strain. Typically included in this category are : cabinets, tanks, pressure vessels and heat exchangers whose shells support significant eccentric loads which would tend to excite shell or local modes of vibration.

iii. Finite Element Model using Solid Element

In this, the SSC is modeled by using solid elements. This type of modeling is expensive and is preferable for local analysis to obtain correct stress picture at openings, shell-nozzle junctions etc.

While modelling the equipment apart from beam & shell/plate elements, solid elements and other type of elements or combination thereof may be used. The mathematical model should not be oversimplified nor over-discretised. If FEM is to be used, the model should adequately represent the dynamic and static characteristic of the equipment as realistically as practicable. The model should be able to predict functional performance as well as structural adequacy.

6.2 Qualification for Functional Operability

Qualification of SSCs can be demonstrated by analysis and/or testing for assessing their intended functional operability.

6.2.1 Functional Operability by Analysis

The qualification of rotating equipment viz., pumps, fans, blowers, motors etc. and reciprocating equipment viz., compressors, diesel generators, reciprocating pumps etc. may be performed by analysis to assess their functional operability.

The general steps involved in qualification of these equipment to meet the qualification requirements of functional operability are the same as in para 6.1.1. In addition, the displacements of the moving components shall be demonstrated to be less than the clearances/gaps between the moving and stationary components/parts viz., impeller-casing, stator-rotor etc. The alignment of equipment shaft & motor shaft shall also be demonstrated to be within the specified value. The reactions at the bearing location shall be shown to be less than the specified bearing capacity.

6.2.2 Functional Operability by Test

Qualification of various types of active equipment, valves, electrical and instrumentation items (panels, instruments and devices including reactor control and shutdown devices, batteries, transformer, switchgear, MCC etc.) can be performed by test to demonstrate their functional operability. In general, the seismic test shall be conducted by mounting the equipment/ component on a shake table. While a seismic motion is given to the shake table corresponding to the location of equipment/component, the equipment/ component shall be checked for its intended functional operability. During the test, the operating loads/conditions of the equipment/ component shall also be simulated adequately. The test should conservatively simulate the seismic motion at the equipment/ component mounting

location. The multidirectional nature of earthquake should be simulated. The list of the test facilities available in the country is given in Annexure-3.

6.2.3 Functional Operability by a Combination of Analysis and Test

Electrical & instrumentation panels, devices and other active equipment/ component can be qualified by a combination of analysis and test. The panel as a structure supporting the various active devices mounted at different locations in the panel can be analysed to calculate the seismic motion at the base of the active devices. The active devices then can be qualified on a shake table for the seismic motion determined at the base of these devices.

Moreover, it is not always practical to qualify all the equipment by testing. This may be because of the size of the equipment, its complexity, nature of equipment, etc. Large equipment, such as multibay equipment racks and consoles/panels etc., may be impractical to test at full scale due to limitations of the shake table. These type of equipment can be qualified by using combination of analysis and testing.

6.3 Qualification by Previous Seismic Analysis & Test Reports

If two or more equipment of same type, make, size, model and design are used in same or different nuclear power plant or different application and if any one of them is seismically qualified for one application requirement then other equipment can be accepted for different application provided following requirements are met:

1. It should be established that equipment design is similar to the reference equipment already qualified.
2. Equipment are mounted/ anchored with similar bolting/welding/EP/support arrangement.
3. Required response spectra of new application is same or lower than the previous application, when compared for same values of damping and OBE & SSE levels of earthquake as applicable.
4. If equipment is qualified by testing then Test Response spectra is enveloping the new RRS of the equipment to be qualified, for same values of damping in the frequency range of interest.
5. Adequate and sufficient documentation in terms of qualification report and justification as above are available to verify the qualification requirement.

6.4 Vendor's General Equipment Specifications (VGES)

For demonstrating structural integrity and pressure boundary integrity by analysis, the various loadings on the equipment as specified in the NPCIL"s equipment specification shall also be specified in Vendor"s General Equipment Specification (VGES). These loadings shall include design loads, loads during normal and upset

conditions (pressure, temperature, mechanical), number of cycles of transients experienced by the equipment, including OBE; loads during emergency and faulted conditions (pressure, mechanical), including SSE; test loads, etc., as specified in NPCIL"s equipment specification. Above list is not complete, and as such, any additional loading coming on equipment due to specific design features shall also be specified in the VGES. The equipment is also required to be qualified for it"s intended functional operability for the earthquake loading in combination with other operating loads as specified in NPCIL"s technical specification and should form part of the VGES.

In order to meet the functional operability requirement of the equipment as brought out in this technical specification, various functions to be performed and functional parameters to be measured by the various devices and sub-devices in the equipment and which are to be monitored during the shake table test shall be brought out in the VGES. These include opening and closing time of valves, change in status of electrical contacts and relays; electrical contact and relay chattering; pressure, temperature, resistance, voltage, current settings etc as applicable.

7.0 SPECIFICATION FOR QUALIFICATION OF VALVES

This section covers the procedure for qualification of a general valve assembly including actuator, in terms of structural integrity, pressure boundary integrity and functional operability as brought out in NPCIL"s equipment specification and in the VGES. The procedure shall be applicable to various power operated valves such as gate valve, globe valve, ball valve, butterfly valve, diaphragm valve, solenoid valve etc and relief valves. Manually operated valves and check valves are not required to be seismically qualified either by analysis or seismic test. However general requirements of design given in ASME Section-III, Division-1, Subsection-NB, NC and ND whichever is applicable shall be met for manually operated valves and check valves. For a specific valve, due to its specific design features if any additional technical requirements are to be met, same shall also be included in the VGES and shall also become part of the below mentioned qualification procedure.

In case of valves, general requirements of design are given in ASME Section-III, Division-1, Subsection-NB, NC and ND whichever is applicable. If any supports are used in the valve to support the valve component or the valve actuator from the valve body, those should be designed as per the general requirements given in ASME Section III, Division-1, Subsection NF. The material used for the valve assembly shall be as given in NPCIL"s specification or as given in VGES. Structural integrity and pressure boundary integrity of the valve assembly shall be demonstrated by carrying out analysis, as applicable. For active valve assemblies, such as active power operated valve assemblies, and pressure relief valve assemblies, the functional operability of valve assembly shall be demonstrated by a test as applicable. The test covered in the specification pertain only to a seismic test. The list of shake table test facilities presently available in the country is given in Annexure-3.

The detailed procedure for qualification of a typical power operated valve assembly is given below:

7.1 Qualification for Structural Integrity and Pressure Boundary Integrity

7.1.1 Qualification by Analysis

Structural integrity and pressure boundary integrity of the valve assembly shall be assessed by performing an analysis. Simplified analysis may be performed based on static forces resulting from equivalent earthquake accelerations acting at the centres of gravity of the extended masses. Classical bending and direct stress equations, where free body diagrams determine a simple stress distribution that is in equilibrium with the applied loads, can be used (Ref-ASME Sec III NB-3524 & NB 3592.3 Earthquake) or FEM method as described below can be used.

7.1.1.1 **Finite Element Modeling**

Valve body, stem, bonnet, yoke, brackets for actuators, gear boxes and any other component may be modelled with appropriate material properties and section properties as calculated from the component detailed drawing using beam elements, shell elements, 3D brick element or combination thereof with justification of assumptions.

Connection between valve body-stem, valve body-yoke, valve yoke-stem, gearbox housing-stem, actuator shaft-gear, bearings, and any other connection specific to the valve may be appropriately modelled.

Concentrated masses of actuators, gearboxes, handwheel, disc of butterfly valve, limit switches or any other devices of the valve may be modelled as lumped mass at the C.G. location. The eccentricity of mass in the finite element model shall be taken into account. The bearings if any shall be modeled by suitable spring elements. The spring constants for bearings shall be used from authenticated document and shall be referred/attached with the report.

Valve ends should be modeled appropriately using boundary elements, spring element or fixed boundary condition.

Any other peculiar construction details of valve assembly may also be modelled appropriately using spring or mass or spring-mass system.

Finite element model of the valve assembly using above considerations shall adequately represent the realistic static/dynamic characteristics of the valve assembly. While modeling the valve assembly apart from beam elements, shell, plate, 3D brick element or combination thereof may also be used with justification. The Finite Element Model shall be forwarded to NPCIL both in soft and hard copies for review and approval before proceeding for further analysis. The assumptions made in the finite element idealization with justifications shall be brought out in the report and all the inputs used in the data preparation shall be from authenticated documents and shall be referred/attached with the report.

7.1.1.2 **Finite Element Analysis**

Using validated software, the valve assembly as modelled above shall be analysed to extract the natural frequencies of the valve. Two different sets of seismic qualification procedures exist depending upon whether the first natural frequency of the valve assembly is less than or greater than rigid/cutoff frequency as determined from the applicable spectra. When the first natural frequency is less than rigid/ cutoff frequency, the valve assembly is called as flexible assembly, whereas when the first natural frequency is greater than or equal to rigid/cutoff frequency it is

called as rigid assembly. All the valve assemblies shall be qualified for OBE alone or for OBE and SSE as applicable as given in NPCIL specification. Worst combinations of unsigned earthquake stresses with signed stresses to non seismic loads, shall be considered for qualification.

In case of rigid valve, the valve model shall be further analysed to evaluate seismic forces/stresses/displacements using equivalent static analysis method. In case of flexible valve assembly, either equivalent static analysis or response spectrum analysis may be performed.

In the equivalent static analysis method for rigid valves, force equivalent of 1.5 times the floor spectral peak acceleration shall be applied in 3 orthogonal directions at all mass points and the static analysis be carried out. In the equivalent static analysis method for flexible valves, force equivalent of 2.25 times (i.e. 1.5 x 1.5) the floor spectral peak acceleration shall be applied in 3 orthogonal directions at all mass points and the static analysis be carried out. The floor response spectra for OBE (2% damping) and SSE (3% damping) corresponding to the valve location, will be given by NPCIL as applicable.

For the response spectrum analysis to be performed on the flexible valve assembly, the applicable response spectra are the spectra at the valve mounting location on the piping system or equipment. These response spectra for OBE and SSE for 2% & 3% damping respectively will be derived by NPCIL & given by NPCIL corresponding to the valve location.

The response spectrum analysis shall include the addition of modal responses in each direction after accounting for closely spaced modes as per USNRC RG 1.92 and missing mass response as per NUREG 1061 vol. 4 (missing mass is the mass of the equipment which has not participated upto rigid/cutoff frequency) and three orthogonal directional responses combination by SRSS method.

If response spectra at the valve mounting locations are not available then floor response spectra accelerations scaled up by a factor of 1.5 shall be used (Ref-ASME QME 1-2012).

The valve assembly shall be analysed for various loads viz., design loads, loads during normal and upset conditions (pressure, temperature, mechanical, cycles, transients), including OBE; loads during emergency and faulted conditions (pressure, mechanical), including SSE; test loads; hydrodynamic, electromagnetic loads or any valve specific load, etc. as specified in the NPCIL"s equipment specification and in the VGES.

If the valve actuator assembly is supported at multiple locations & subjected to different seismic motion, then the assembly shall be analysed for seismic anchor

movement (SAM). The SAM values at the support locations for OBE & SSE will be given by NPCIL as applicable.

The seismic displacements as obtained by seismic analysis shall be combined with displacements/deflections due to other loads and shall be checked for operational/allowable clearances specified at various component sub-assemblies viz. piston-cylinder of pneumatic actuator, stem-bush or steam-gland at the bush and gland location of the yoke, valve disk to valve seat deflections etc.

For fatigue analysis if applicable, fifty stress cycles corresponding to five numbers of OBEs (ten stress cycles per OBE) and ten stress cycles corresponding to one SSE event shall be accounted in addition to the stress cycles due to other loads as specified in the NPCIL"s equipment specification and in the VGES.

7.1.2 ASME Codal Qualification

Load combinations to be adopted for ASME Class-1, 2 & 3 valves for design condition and various service levels are given in Annexure –1.

The combined stresses calculated in the valve assembly shall meet the relevant codal requirements viz. ASME Section-III, Division-1, Subsection-NB-3000, NC-3000, ND-3000 whichever is applicable.

The combined stresses in the bracket, supporting structure of actuator etc shall meet the requirements of ASME-III, Division-1, Subsection-NF-3000.

If there are any bearings, the load at the bearing location shall be less than the bearing load capacity.

The stresses in the weld connections if any shall be checked. The stresses may be checked as per NUREG CR-6241, IS 800, IS 456 or any other applicable code.

The seismic displacements as obtained by seismic analysis shall be combined with displacements/deflections due to other loads and shall be checked for operational/allowable clearances specified at critical locations of valve actuator assembly, if applicable.

7.2 Qualification for Functional Operability

7.2.1 Qualification by Analysis

The functional qualification of certain valves can be demonstrated by Analysis with prior approval of NPCIL. The seismic response as obtained by seismic analysis shall be combined with responses due to other loads and shall be checked for

operational/allowable values specified at various component sub-assemblies. For example, the functional operability of relief valves can be demonstrated by analysis, showing that valve disc does not lift up by seismic inertial force.
The functional qualification of large size valves viz. Main Steam Isolation Valve (MSIV) etc. is not possible to demonstrate by shake table test. In such cases for such large size valves, the functional operability can be checked by performing analysis by showing that the deflections and so the resultant clearance being less than allowable clearances i.e. between piston-cylinder of pneumatic actuator, stem-bush or steam-gland at the bush and gland location of the yoke, valve disk to valve seat deflections.

7.2.2 Qualification by Test

7.2.2.1 Determination of Natural Frequency

The first natural frequency or all modes below the cutoff frequency or rigid frequency of valve assembly may be determined by exploratory vibration test. Exploratory vibration test on a valve assembly may be conducted on a shake table, using resonance search test as per IEEE 344, with the modification that the vibration test shall be over a frequency range of 1 to 100 Hz or cutoff frequency as applicable. Natural frequency determination can also be done by Impact Hammer test, or any other justifiable method. The procedure for the Impact hammer test is given in Annexure-6.

The procedure covering the details of test method; mounting arrangements; test setup; test sequence; test equipment, instruments; measuring parameters; etc. shall be prepared as per the clauses given in this specification and shall be submitted to NPCIL for prior approval.

Exploratory vibration test Impact Hammer test shall then be conducted meeting the requirements of approved procedure.

7.2.2.2 Environmental Aging Test

Any environmental (temperature, pressure, humidity, plant operating vibration, irradiation) aging effects on the valve assembly, if specified in NPCIL"s valve specification, shall be performed before conducting the equivalent static loading test or shake table test. The guidelines for these tests viz., normal thermal aging test, normal pressurization cycle test, normal radiation test, vibration aging test, Design Basis Event (DBE) environment test are given in Part-III of IEEE 382 (2006). If the valve is determined not to have significant aging mechanisms by virtue of periodic inservice surveillance, maintenance etc., then periodic surveillance, maintenance interval becomes qualified life, if applicable as per NPCIL specification or VGES. In view of the above, omission or partial fulfillment

of the environmental aging tests with justification shall be forwarded to NPCIL for approval.

7.2.2.3 **Qualification of Actuator**

Since valves are mostly rigid and are tested by equivalent static load test, whereas actuators see the earthquake motion at the valve top which is amplified by piping and support. Hence the valve actuators shall be separately qualified seismically as per the requirements of IEEE 382. However, the test frequency range should be from 1-100Hz in case of hard rock sites. In case, the actuator has already been seismically qualified by the actuator supplier, qualification report shall be submitted to NPCIL for approval.

7.2.2.4 **Qualification of Valve by Testing**

The valve assembly is required to be tested for demonstrating the functional operability by any one of the following methods:

1. Single frequency input on uniaxial shake table,
2. Multi frequency input on tri-axial shake table,
3. Static side load test.

For quick acting solenoid valves e.g. solenoid valves in SSS (Secondary Shutdown System) / SDS#2 (Shut Down System # 2) or Pilot Operated Valves in Shutdown system of BWRs, and critical valves that are required to perform during OBE and/or after SSE event or the valves important to reactor safety, housing flexible components in it e.g. springs etc they shall be shake table tested.

For other power actuated valves, static side load test may be conducted as per ASME QME 1-2012.

If the valve is required to be functional during OBE and SSE, only one test corresponding to SSE level loading need to be performed.

7.2.2.4.1 **Qualification using Single Frequency Inputs on Uniaxial Shake Table**

The tests on valve actuator assembly can be conducted on uniaxial shake table capable of giving horizontal and vertical motion, one at a time. The valve actuator assembly shall be mounted on the shake table. While a seismic motion is given to the table the valve assembly should be checked for its intended functional operability. As specified in the approved procedure, during the test, the operating loads on the valve assembly should also be simulated adequately. Single (Discrete) frequency tests using sinusoidal waveforms shall be used for frequencies from 1 Hz to 100 Hz or cutoff frequency as applicable. The test frequencies may be spaced

at 1/3 octave interval upto 50 Hz and at 1/6 octave interval beyond 50Hz, if required. The acceleration values shall be taken as 1.5 times of spectral peak acceleration of envelope of the floor response spectra of the floors on which valve mounted pipelines are supported. The floor response spectra of all three directions with 2 % damping for OBE and 3% damping for SSE shall be used. The acceleration value of OBE and SSE whichever is maximum shall be used as input motion. The test duration at each frequency shall be 30 second or more to verify the opening and closing of the valve assembly or for intended functional operability. The acceleration at low frequencies i.e below 4Hz shall be given upto the capability of the shake table. The test shall be conducted in two horizontal directions and one vertical direction.

If accelerations values are not available, then tests at 3.5g acceleration level as input can be permitted (Ref. Fig.1 of IEEE-382, 2006) with proper justification.

Typical procedure for uniaxial shake table test is given in Annexure-5.

The procedure for seismic qualification test of valve on uniaxial shake table covering the details of mounting arrangements, loadings, shake table description, test sequence etc. shall be prepared as per clauses given above/Annexure and as per IEEE 344 and shall be submitted to NPCIL for prior approval.

The seismic qualification test on shake table, for valve assembly shall then be performed at a test facility and shall meet the requirements of IEEE 344/IEC 60980 and/or approved procedure.

7.2.2.4.2 **Qualification using Multi Frequency Input on tri-axial Shake Table**

The valve actuator assembly shall be mounted on the shake table. While a seismic motion is given to the table the valve assembly should be checked for its intended functional operability. As specified in the approved procedure, during the test, the operating loads on the valve assembly should also be simulated adequately. The test should conservatively simulate the seismic event at the valve mounting location. The SSE and OBE required response spectra (RRS) at valve mounting location will be given by NPCIL. If response spectra at the valve mounting locations are not available, then floor response spectra accelerations scaled up by a factor of 1.5 times may be used (Ref-ASME QME 1-2012). The multidirectional nature of earthquake shall be accounted. In general, the shake table motion shall be such that it

i) produces a Test Response Spectra (TRS) that envelopes the Required Response Spectra (RRS).
ii) has a peak acceleration equal to or greater than RRS Zero Period Acceleration (ZPA).

iii) does not include frequency content above the RRS ZPA asymptote.
iv) has sufficient duration commensurate with strong motion part and fatigue inducing potential of the time history.

The procedure for seismic qualification test of valve on triaxial shake table covering the details of mounting arrangements, loadings, shake table description, test sequence etc. shall be prepared as per clauses given above/Annexure and as per IEEE 344 and shall be submitted to NPCIL for prior approval.

The seismic qualification test on shake table, for valve assembly shall then be performed at a test facility and shall meet the requirements of IEEE 344/IEC 60980 and/or approved procedure.

7.2.2.4.3 **Qualification using Static Side Load Test**

ASME QME 1-2012 permits the use of static side load test for power actuated valves.

Static side load testing is a seismic test intended to demonstrate the functional capability of the valve actuator assembly when subjected to loading that is representative of a specified seismic load qualification level.

The static side load test method for Power actuated valves are given in Annexure-4**.**

For static side load test, accelerations corresponding to 1.5 times the spectral peak acceleration of the floor response spectra corresponding to valve location in three orthogonal directions at 2 % damping for OBE and 3% damping for SSE shall be considered. Accelerations in three orthogonal directions shall be combined by SRSS method. Acceleration value thus obtained shall be further multiplied by following factors (Ref-ASME QME 1-2012).

1.1 (test margin) if the valve assembly is determined to be rigid, or
1.65 (amplification coefficient of 1.5 plus test margin) if the valve assembly is determined to be flexible, by carrying out analysis as per 7.1 or natural frequency determination test.

Typical procedure for Static side load test is given in Annexure-4.

The procedure for seismic qualification test of valve by Static side load test covering the details of mounting arrangements, loadings, test sequence etc. shall be prepared as per clauses given above/Annexure and as per IEEE 344 and shall be submitted to NPCIL for prior approval.

The seismic qualification by static side load test, for valve assembly shall then be performed at a shake table test facility and shall meet the requirements of IEEE 344/IEC 60980 and/or approved procedure.

7.3 Documentation

The valve assembly finite element model and the data giving details viz., nodal coordinates, element type used, element node relationship, material and section properties, lumped masses, rigid elements, and end release codes, details as to whether consistent mass matrix or lumped mass matrix, loads applied, boundary conditions etc. shall be submitted for prior approval of NPCIL in both soft and hard copies prior to taking up the analysis. The validation report of the software, describing the benchmark problem used to establish the dynamic analysis capabilities of the package along with the bench marking report shall also be submitted to NPCIL.

The qualification report shall be prepared covering the description of the finite element model, assumptions made in the modeling and their justification, input data with supporting reference documents, name and version of the software used for analysis and its validation, natural frequencies calculated, modal mass participation factors, missing mass correction calculations, equivalent static / response spectrum analysis results viz., stresses and displacements; combination of stresses for different service levels, compliance of stresses with codal requirements and displacements to be within the design clearances, results, conclusions stating the fulfillment of qualification requirements, etc. shall be submitted to NPCIL for approval.

The finite element model along with analysis input data files and results in hard and soft copies shall be submitted to NPCIL for records.

For the valve assembly qualified by testing (including impact hammer test), the test reports covering the approved test procedure, mounting methods, shake table details, test setup, test sequence, input motion and details of compliance with IEEE 344 and IEC 60980 etc. shall be prepared & submitted to NPCIL for approval & records.

The analysis/test reports shall be documented in the form such that the reports shall be self-explanatory and independently reviewable. Guidelines given in Clause-11 of IEEE 344 or Appendix-C of ASME section III, including the NPCIL VGES procedure are to be followed for the same.

8.0 SPECIFICATION FOR SEISMIC QUALIFICATION OF ELECTRICAL & INSTRUMENTATION ITEMS (PANELS, EQUIPMENT, INSTRUMENTS AND DEVICES)

This section covers the procedure for qualification of electrical and instrumentation items (panels, instruments, equipment and devices) in terms of structural integrity, pressure boundary integrity and functional operability as applicable, brought out in the respective NPCIL"s equipment specification and in the VGES. This procedure shall be applicable to various panels such as instrumentation and electrical panels, standard electronic cabinet, control panels, panels used for A/c packages or switchgears, valve station racks, instrument racks, battery stands, instruments / devices / modules mounted on floor / walls / panels, etc. However, any additional functional requirement on account of specific design shall also be included in the below mentioned qualification procedure.

For the design of the panel as a structure, the general requirements of design are given in ASME Section III, Division-1, Subsection NF-3000 & IEEE 420. The material properties to be used for the equipment shall be as given in NPCIL"s specification or as given in VGES. Structural integrity of the panel and pressure boundary integrity of any equipment mounted in the panel shall be demonstrated by carrying out an analysis and/or testing. Functional operability of the panel can be demonstrated by testing or by combination of analysis and testing. However, functional operability and structural integrity for the instrument and I&C devices shall be demonstrated by testing only wherever applicable. The test covered in this specification pertain only to seismic test. The list of recognized shake table test facilities presently available in the country is given in Annexure-3.

The detailed procedure for seismic qualification of a general panel assembly/ instruments/ equipment / devices is given below:

8.1 Qualification for Structural Integrity and Pressure Boundary Integrity

8.1.1 Qualification by Analysis

The structural integrity of the panel as a structure and instrumentation items requiring only structural integrity (e.g. orifice, venturi etc.) shall be assessed by analysis. The structural integrity and pressure boundary integrity of tanks, piping, tubing, heat exchangers etc. mounted on the panel can also be assessed by analysis.

The panel shall be analysed by finite element method. The various steps involved in finite element idealisation and the static & dynamic analyses of the panel are brought out below:

8.1.1.1 **Finite Element Modeling**

Major structural members of the panel may be modelled using beam elements with appropriate material and section properties calculated from detailed drawings of structural assembly. The plates used in the panel may be modelled as lumped mass or plate / shell element if required / justified.

Some of the panels may have heavy electrical components viz., blower, switch gear, transformers, coils, batteries, etc. and mechanical / instrumentation components viz., tanks, small heat exchangers, valves, transmitters, catchpots etc. Such components may be appropriately modeled using lumped mass at their CG locations with rigid link or spring element in the finite element model of the panel. The connection between heavy components and panel structure may be appropriately modelled with spring-mass system. For the components mounted on thin sheet metal of the panel, following may be adopted:

Light devices and various instruments (viz. relays, contactors, PCB"s etc.) mounted on the plate (modules) may be modelled as lumped mass or combination of spring mass system with proper justification.

Cabling, tubing or any other connections connected with panel may be appropriately modelled by using spring/boundary elements. Similarly, the panel mounting/support arrangements may be appropriately modelled by using spring, boundary element or fixed boundary condition.

All the critical sections of panel, base plates, connections of instruments, mounting hardware of instruments, etc. shall be modelled adequately. The finite element model shall correctly represent the actual welding details viz. spot welds, line weld etc.

The finite element model using above considerations shall adequately represent the realistic dynamic/static characteristics of the panel assembly. While modelling the panel and the major mechanical and electrical components mounted on the panel like tanks, small heat exchangers, transformers, switchgears, etc., apart from beam, plate & shell elements, 3D brick element or combination thereof may also be used with proper justification. The finite element model prepared shall be forwarded to NPCIL both in soft and hard copies for review and approval before proceeding for further analysis. The assumptions made in the finite element idealization with proper justification shall be brought out in the report. All the inputs used in the data preparation shall be from authenticated document and shall be referred/attached with the report.

8.1.1.2 **Finite Element Analysis**

Using the validated software, the panel as modelled above shall be analysed using response spectrum analysis. The response spectrum analysis shall include the addition of modal responses in each direction after accounting for closely spaced modes as per USNRC RG 1.92 and missing mass response as per NUREG 1061 Vol. 4 (missing mass is the mass of the equipment which has not participated upto rigid frequency) the response upto rigid frequency and the missing mass response combined by SRSS and three orthogonal directional response combination by a SRSS method. The panel should be qualified for OBE alone or OBE and SSE as applicable. The floor response spectra at the mounting locations of panel for OBE (2% damping) and SSE (3% damping) will be supplied by NPCIL as applicable.

Some of the panels may have components like tubing, tanks, piping, coolers, blower, small heat exchangers like radiator, etc. The panels and such components shall be analysed for various loads viz. design loads, loads during normal and upset conditions (pressure, temperature, mechanical, cycles, transients), including OBE; loads during emergency and faulted conditions (pressure, mechanical), including SSE; test loads; hydrodynamic, electromagnetic loads, etc. as applicable and as specified in the NPCIL"s equipment specification and in the VGES. Worst combinations of unsigned earthquake stresses with other signed stresses due to non seismic loads, shall be considered for qualification.

If the panel assembly is supported at multiple locations & subjected to different seismic motion, then the assembly shall be analysed for seismic anchor movement (SAM). The SAM values at the support locations for OBE & SSE will be given by NPCIL as applicable.

The seismic displacements as obtained by seismic analysis shall be combined with displacements/deflections due to other loads and shall be checked for operational/allowable clearances specified at various component sub-assemblies etc.

For fatigue analysis if applicable, fifty stress cycles corresponding to five numbers of OBEs (ten stress cycles per OBE) and ten stress cycles corresponding to one SSE event shall be accounted in addition to the stress cycles due to other loads as specified in the NPCIL"s equipment specification and in the VGES.

8.1.2 **ASME Codal Qualification**

Load combinations to be adopted for ASME Class-1, 2 & 3 components (equipment, piping) and panel/component supports for design and service levels are given in Annexure-1.

The combined stresses in the components like tanks, piping, heat exchanger, etc. shall meet the requirements of ASME Section-III, Division-1, Subsection-NB-3000, NC-3000, ND-3000 whichever is applicable.

The combined stresses in panel/component support structural members shall meet the requirements of ASME Section-III, Division-1, Subsection-NF-3000.

The stresses in the base plate & weld connections if any shall be checked. The stresses may be checked as per NUREG CR-6241, IS 800, IS 456 or any other applicable code. The foundation bolts design shall be checked as per ACI-349.

If there are any bearings the load at the bearing location shall be less than the bearing load capacity.

The seismic displacements as obtained by seismic analysis shall be combined with displacements/deflections due to other loads and shall be checked for operational/allowable clearances specified at critical locations of the panel assembly, if applicable.

8.2 Qualification for Functional Operability

8.2.1 Qualification by Test

8.2.1.1 Environmental Aging Test

Before the shake table test of panel or the instrument/device/module on the panel, other environmental aging tests if specified viz. thermal, pressure, humidity, radiation, plant vibrations, OBE vibration shall be conducted in accordance with IEEE 323 and IEC 60780. The assessment of equipment aging effect is required to determine if aging has significant effect on intended functional operability of the devices in the panel. For example, electromechanical equipment shall be operated to simulate the expected mechanical wear and electrical contact degradation, contact pitting, etc. of the device to be tested. If the equipment is determined not to have significant aging mechanisms by virtue of periodic inservice surveillance, maintenance etc. then periodic surveillance, maintenance interval becomes qualified life. In view of the above, omission or partial fulfillment of the environmental aging tests with justification shall be forwarded to NPCIL for approval.

8.2.1.2 Qualification by Shake Table Test

The panel or the devices can be shake table tested by one of the two methods given below.

a) Full scale testing of a panel:

The functional operability of the panel including the devices/instruments mounted on the panel can be demonstrated by full scale testing of the panel on a shake table in accordance with IEEE 344 /IEC 60980. If the testing is done on a representative panel then, the panel shall be mounted with all the possible components, instruments, devices etc. at their respective locations to ensure maximum / optimum loading.

The panel shall be mounted on the shake table. While a seismic motion is given to the table, the instrument/devices in the panel should be checked for its intended functional operability and structural integrity as detailed in respective NPCIL equipment specification. To establish structural integrity of the panels, operating loads on the equipment should be simulated during the test adequately. The stresses at critical locations shall be monitored by mounting strain gauges and accelerometers, during the test. The locations for mounting strain gauge, accelerometer will be finalized in consultation with NPCIL engineers.

The test should conservatively simulate the seismic event at the equipment mounting location. The multidirectional nature of earthquake should be accounted. In general the shake table motion should be such that it

i) produces a Test Response Spectra (TRS) that envelopes the Required Response Spectra (RRS).
ii) has a peak acceleration equal to or greater than RRS Zero Period Acceleration (ZPA).
iii) does not include frequency content above the RRS ZPA asymptote.
iv) has sufficient duration commensurate with the strong motion part and fatigue inducing potential of time history.

In the panel testing, the RRS are the 5% damping Floor Response Spectra (FRS) of the floor on which the panel is mounted. The floor response spectra which is to be used for testing, for 5% damping for SSE and OBE will be given by NPCIL.

b) Testing of instruments devices mounted on the panel /support/rack, sections of multi-cabinet assemblies by combined analysis and test:

During analysis, if panel/support/rack is found to be rigid (i.e. first natural frequency greater than or equal to cutoff frequency) then the functional operability of the instrument/device/module mounted in the panel/support/rack can be demonstrated by testing individual instrument/device/module on shake table. In this case the floor response spectra are the Required Response Spectra (RRS) for testing.

If the panel/support/rack is found to be flexible (i.e. first natural frequency less than cutoff frequency. The functional operability of the instruments/devices/modules mounted in the panel can also be demonstrated by testing individual instruments/devices/modules on the shake table. In this case, response spectra at the base of instruments/devices/modules mounted in the panel are used as Required Response Spectra (RRS) for testing. These response spectra are obtained from time history analysis of the panel. The time history analysis of the panel shall be carried out using the same finite element model prepared as given in 8.1.1. Time history analysis shall be performed to calculate the time history and response spectra at the base of the instrument/device/module mounted in the panel. Any other method for generation of the RRS or accelerations at the base of the device in the panel can be used with proper justification. For example generic values of in-cabinet amplification (Table 6.2 of SQUG, DOE-GIP) can be used to arrive at the accelerations at the base of the devices from the floor response spectra. The intended functional operability of the instruments/devices/modules can be demonstrated by mounting them on a shake table and then perform the test in accordance with IEEE 344 / IEC 60980. In the device testing, response spectra at the base of the device on the panel are used as Required Response Spectra (RRS). If the RRS at the base of the devices are not available then, accelerations at the base of the devices derived from response spectrum analysis of the panel or other justifiable methods can be used for testing of devices. A sample test procedure for conducting seismic test on a typical instrument/ device is enclosed as Annexure-5.

For multi-cabinet assemblies like UPS, switchgear and MCC panels, cabinets containing 19” rack, few of the electrically and mechanically representative sections of multi-cabinet assembly can be seismically tested on shake table using appropriately increased RRS (usually more than 10%) accelerations and/or appropriate analytical justification for multi-cabinet assembly qualification as applicable.

The procedure for shake table test covering the mounting arrangement, pre-post intermediate inspection, monitoring parameters, input motion, shake table facility, environmental aging test, operational loads, acceptance criterion, etc. shall be prepared as per IEEE 344/ IEC 60980 and submitted to NPCIL for prior approval.

The shake table test shall then be conducted at a shake table test facility and shall meet the requirements of IEEE 344 / IEC 60980 or the approved procedure.

8.3 Documentation

The equipment finite element model and the data giving details viz., nodal coordinates, element type used, element node relationship, material and section properties, lumped masses, rigid elements, and release codes, details as to whether consistent mass matrix or lumped mass matrix, loads applied, boundary conditions etc. shall be submitted for prior approval of NPCIL in both soft and hard copies prior to taking up the analysis. The validation report of the software, describing the benchmark problem used to establish the dynamic analysis capabilities of the package along with the bench marking report shall also be submitted to NPCIL.

The qualification report shall be prepared covering the description of the finite element model, assumptions made in the modeling and their justification, input data with supporting reference documents, name and version of the software used for analysis and its validation, natural frequencies calculated, modal mass participation factors, missing mass correction calculations, equivalent static / response spectrum analysis results viz., stresses and displacements; combination of stresses for different service levels, compliance of stresses with codal requirements and displacements to be within the design clearances, results, conclusions stating the fulfillment of qualification requirements, etc. shall be submitted to NPCIL for approval.

The finite element model along with analysis input data files and results in hard and soft copies shall be submitted to NPCIL for records.

For the equipment qualified by testing, the test reports covering the approved test procedure, mounting methods, shake table details, test setup, test sequence, input motion and details of compliance with IEEE 344 and IEC 60980 etc. shall be prepared & submitted to NPCIL for approval & records.

The analysis/test reports shall be documented in the form such that the reports shall be self-explanatory and independently reviewable. Guidelines given in Clause-11 of IEEE 344, including the NPCIL VGES procedure are to be followed for the same.

9.0 SPECIFICATION FOR QUALIFICATION OF ROTATING AND RECIPROCATING EQUIPMENT

This section covers the procedure for qualification of rotating and reciprocating equipment in terms of structural integrity, pressure boundary integrity and functional operability as brought out in the NPCIL"s equipment specification and in the VGES. The procedure shall be applicable to rotating equipment viz. pump-motor assembly, fan, blower etc. and reciprocating equipment viz. compressor, diesel generator, reciprocating pumps etc.

In case of pumps, general requirements of design are given in ASME Section-III, Division-1, Subsection-NB, NC and ND whichever is applicable. If any supports are used for the equipment, those should be designed as per the requirements given in ASME Section III, Division-1, Subsection NF. The material used for the qualification of the equipment shall be as given in NPCIL"s specification or as given in VGES. Structural integrity, pressure boundary integrity and functional operability of the equipment shall be demonstrated by carrying out analysis. The functional operability of the equipment can also be demonstrated by a test. The tests covered in the specification pertain only to a seismic test. The list of shake table test facilities presently available in the country is given in Annexure-3.

Typical procedure for qualification of centrifugal pump-motor assembly (i.e. rotating equipment) is given below. Similar procedure shall be followed for qualification of all other rotating/reciprocating equipment in the scope of this specification. However, for specific equipment, due to its specific design features any additional specific functional requirement to be met shall also be included in the VGES and shall also be included in the below mentioned procedure.

9.1 Qualification for Structural Integrity and Pressure Boundary Integrity

9.1.1 Qualification by Analysis

The structural integrity and pressure boundary integrity of the centrifugal pump-motor assembly can be assessed by performing an analysis.

9.1.1.1 Finite Element Modeling

Pump casing, motor casing, stator, shaft and rotor, impeller, coupling, frame of motor and pump, bearings of motor, pump sealing arrangements, mounting base frame/structure and any other components may be modeled with appropriate section and material properties as calculated from/given in the component detailed drawings. These components may be modeled with beam/shell/plate/3 D brick elements or combination thereof so as to adequately represent the static/dynamic characteristics of the pump-motor assembly.

Motor casing, pump casing, shaft, supporting structure of motor and pump may be modeled with beam elements. Stator and rotor of motor, impeller of pump may be modeled as lumped mass/spring mass system at appropriate nodes. The bearings shall be modeled by suitable spring elements. Coupling may be modeled using spring elements/master-slave/rigid link element or with appropriate use of end release code. Sealing arrangement may also be modeled with appropriate spring mass system. The spring constants for bearings shall be used from authenticated document and shall be referred/attached with the report.

Extensions of a stationary component upto the rotating component may be modeled by appropriate rigid links.

Foundation bolts for base frame, bolts of motor casing with base frame, bolts of pump casing with base frame, coupling bolts if any and bolts of flanges may be appropriately modeled by using boundary elements.

Any other peculiar construction detail of pump-motor assembly may also be modeled appropriately by using mass and spring-mass system.

Finite element model constructed using above considerations shall adequately represent the realistic static/dynamic characteristics of the pump motor assembly. The model prepared both in soft and hard copies shall be forwarded to NPCIL for review and approval before proceeding for further analysis. The assumptions made in the finite element idealization with proper justification shall be brought out in the report. All the inputs used in the data preparation shall be from authenticated document and shall be referred/attached with the report.

9.1.1.2 **Finite Element Analysis**

Using validated software, the finite element model shall be analysed to extract the natural frequencies of the pump-motor assembly.

If the first natural frequency of support frame and pump casing & motor casing is above rigid/ cutoff frequency, then motor shaft, rotor of the motor and pump shaft & impeller model may be decoupled from motor support frame and pump-motor casings. The support frame and pump casing & motor casing shall be analysed using equivalent static analysis method. In the equivalent static analysis method, forces equivalent of 1.5 times floor ZPA may be applied simultaneously in the 3 orthogonal directions at all mass points and static analysis carried out.

The decoupled rotating-assembly shall be analysed by using either equivalent static analysis method or response spectrum analysis method. In the equivalent static analysis method, forces equivalent of 1.5 times floor spectral peak accelerations

may be applied simultaneously in the 3 orthogonal directions at all mass points and static analysis shall be carried out.

If the first natural frequency of the support frame and pump casing and motor casing is less than rigid/ cutoff frequency, then integral model of pump support, stationary components, rotating parts and other devices may be prepared and analysed by using either equivalent static analysis method or response spectrum analysis method. In the equivalent static analysis method, forces equivalent of 1.5 times floor spectral peak accelerations may be applied simultaneously in the 3 orthogonal directions at all mass points and static analysis carried out.

The response spectrum analysis shall include the addition of modal responses in each direction after accounting for closely spaced modes as per USNRC RG 1.92 and missing mass response as per NUREG 1061 vol. 4 (missing mass is the mass of the equipment which has not participated upto rigid/ cutoff frequency). The response upto rigid frequency and the missing mass response shall be combined by SRSS method and three orthogonal directional responses shall also be combined by SRSS method.

The pump-motor assembly shall be checked for their operating frequency & it should be away from the natural frequencies of building floor.

The pump-motor assembly shall be qualified for OBE alone or OBE and SSE as applicable. The applicable response spectra are the response spectra at equipment mounting location. OBE (2% damping) and SSE (3% damping) response spectra at the base of pump-motor assembly or floor will be given by NPCIL as applicable. Worst combinations of unsigned earthquake stresses with other signed stresses due to non seismic loads, shall be considered for qualification.

The pump shall be analysed for the loads experienced by it at the nozzle location from the connected piping. The pump shall be analysed for various loads viz. design loads, loads during normal and upset conditions (pressure, temperature, mechanical, cycles, transients), including OBE; loads during emergency and faulted conditions (pressure, mechanical), including SSE; test loads; hydrodynamic, electromagnetic loads, etc. as applicable and as specified in the NPCIL"s specification and in the VGES.

If the pump motor assembly is supported at multiple locations & subjected to different seismic motion, then the assembly shall be analysed for seismic anchor movement (SAM). The SAM values at the support locations for OBE & SSE will be given by NPCIL as applicable.

The seismic displacements as obtained by seismic analysis shall be combined with displacements/deflections due to other loads and shall be checked for

operational/allowable clearances specified at various component sub-assemblies viz. impeller-casing, stator-rotor, coupling, attached piping/ducting/cabling etc.

For fatigue analysis if applicable, fifty stress cycles corresponding to five numbers of OBEs (ten stress cycles per OBE) and ten stress cycles corresponding to one event of SSE shall be accounted in addition to the stress cycles due to other loads as specified in the NPCIL"s equipment specification and in the VGES.

9.1.2 ASME Codal Qualification

Load combinations to be adopted for ASME Class-1, 2 & 3 pumps and pump supports for design and service levels are given in Annexure-1.

The combined stresses in the individual components/elements shall meet the relevant codal requirements viz. ASME Section-III, Division-1, Subsection NB-3000, NC-3000 and ND-3000 whichever is applicable.

The combined stresses in the base frame/support shall meet the requirements of ASME Section-III, Division-1, Subsection-NF-3000.

The combined stresses in mounting bolts of pump casing to base frame between motor and base frame, coupling bolts, flanges connecting bolts shall meet the relevant codal requirement viz., ASME Section-III, Division-1, Subsection NB-3000, NC-3000, ND-3000 & NF-3000.

The combined stresses in the nozzle, as calculated using WRC-297/WRC-107 or any other justifiable method shall meet the requirements of ASME Section-III, Division-1, Subsection NB, NC and ND.

The stresses in the base plate & weld connections if any shall be checked. The stresses may be checked as per NUREG CR-6241, IS 800, IS 456 or any other applicable code. The foundation bolts shall be checked as per ACI-349.

If there are any bearings, the reaction at the bearing locations shall be less than the bearing load capacity.

The seismic displacements as obtained by seismic analysis shall be combined with displacements/deflections due to other loads and shall be checked for operational/allowable clearances specified at various component sub-assemblies viz. impeller-casing, stator-rotor, coupling, attached piping/ducting/cabling etc, if applicable.

9.2 Qualification for Functional Operability

9.2.1 Qualification by Analysis

The seismic displacements as obtained by seismic analysis shall be combined with displacements/deflections due to other loads and shall be checked for operational/allowable clearances specified at various component sub-assemblies viz. impeller-casing, stator-rotor, coupling, attached piping/ducting/cabling etc. The reactions coming at the bearing locations shall be less than bearing load capacity.

9.2.2 Qualification by Test

The functional operability of rotating and reciprocating equipment is generally demonstrated by analysis as brought out above. However, these equipment can as well be qualified for their functional operability by conducting a shake table test in accordance with IEEE 344 and IEC 60980.

The equipment shall be mounted on the shake table. While a seismic motion is given to the table, the equipment should be checked for its intended functional operability. During the test, the operating loads on the equipment should also be simulated adequately.

The test should conservatively simulate the seismic event at the equipment mounting location. The multidirectional nature of earthquake should be accounted. In general, the shake table motion should be such that it

i) produces a Test Response Spectra (TRS) that envelopes the Required Response Spectra (RRS).
ii) has a peak acceleration equal to or greater than RRS Zero Period Acceleration (ZPA).
iii) does not include frequency content above the RRS ZPA asymptote.
iv) has sufficient duration commensurate with strong motion part and fatigue inducing potential of time history.

In the equipment testing, the RRS are the floor response spectra (FRS) of the floor on which the equipment is mounted.

The procedure for shake table test covering the mounting arrangement, pre-post intermediate inspection, monitoring parameters, input motion, shake table facility, environmental aging test, operational loads, acceptance criterion, etc. shall be prepared as per IEEE 344/ IEC 60980 and submitted to NPCIL for prior approval.

The shake table test shall then be conducted at a shake table test facility and shall meet the requirements of IEEE 344 / IEC 60980 or the approved procedure.

9.3 Documentation

The equipment finite element model and the data giving details viz. nodal coordinates, element type used, element node relationship, material and section properties, lumped masses, rigid elements, and end release codes, details as to whether consistent mass matrix or lumped mass matrix, loads applied, boundary conditions etc. shall be submitted for prior approval of NPCIL in both soft and hard copies prior to taking up the analysis. The validation report of the software, describing the benchmark problem used to establish the dynamic analysis capabilities of the package along with the bench marking report shall also be submitted to NPCIL.

The qualification report shall be prepared covering the description of the finite element model, assumptions made in the modeling and their justification, input data with supporting reference documents, name and version of the software used for analysis and its validation, natural frequencies calculated, modal mass participation factors, missing mass correction calculations, equivalent static / response spectrum analysis results viz., stresses and displacements; combination of stresses for different service levels, compliance of stresses with codal requirements and displacements to be within the design clearances, results, conclusions stating the fulfillment of qualification requirements, etc. shall be submitted to NPCIL for approval.

The finite element model along with analysis input data files and results in hard and soft copies shall be submitted to NPCIL for records.

For the equipment qualified by testing, the test reports covering the approved test procedure, mounting methods, shake table details, test setup, test sequence, input motion and details of compliance with IEEE 344 and IEC 60980 etc. shall be prepared & submitted to NPCIL for approval & records.

The analysis/test reports shall be documented in the form such that the reports shall be self-explanatory and independently reviewable. Guidelines given in Clause-11 of IEEE 344 or Appendix-C of ASME section III, including the NPCIL VGES procedure are to be followed for the same.

10.0 SPECIFICATION FOR QUALIFICATION OF TANKS, VESSELS, HEAT EXCHANGERS AND THEIR SUPPORTS

This section covers the procedure for qualification of passive equipment like tanks, vessels, heat exchangers, supports, etc. in terms of structural integrity and pressure boundary integrity as brought in the NPCIL"s equipment specification and in the VGES.

In case of tanks, vessels, pressure vessel and tubes of heat exchangers and supports general requirements of design are given in ASME Section-III, Division-1, Subsection-NB, NC, ND for safety class-1, 2 and 3 respectively and Subsection NF whichever is applicable. For safety class-4/NINS (Not Important to Nuclear Safety) tanks and vessels, the general requirements of design are given in ASME section VIII, Division-1 and Division-2 or applicable National design code/standard. For shell & tube heat exchanger, the general requirements of design are given in Mechanical standard TEMA class-C. The material used for the equipment shall be as given in NPCIL"s specification or as given in VGES. Special attention is required to be given while analysing the nozzles on the tanks and vessels.

The procedure for seismic qualification of tanks, vessels, heat exchangers and their supports is given below. However, any additional specific functional requirement to be met for these passive equipment due to it"s specific design features shall also be included in VGES and also in the procedure mentioned below:

10.1 Qualification of Structural Integrity and Pressure Boundary Integrity

10.1.1 Qualification by Analysis

The structural integrity and pressure boundary integrity of tanks, vessels, heat exchangers, supports etc. can be assessed by performing analysis.

The tank, vessel, heat exchangers (including plate type) and their supports shall be analysed by simplified method as given in ASCE 4-98 with prior approval of NPCIL or by finite element method as applicable. The various steps involved in finite element idealisation and the static and dynamic analysis of the tank, vessel, heat exchangers and their supports are brought out below.

10.1.1.1 Finite Element Modeling

The tank and vessel body may be modelled with beam, plate, shell, 3-D brick elements or combination thereof with proper justification.

The tank and vessel including the contained fluid & Heat exchangers internals viz. tube sheets, baffle plate, tube bundles, adsorber, sparger, tubing, etc. may be modelled appropriately to represent their dynamic/static characteristics.

The support structure of the tank may be modeled with beam/plate elements with appropriate section properties as obtained from detail drawing of supports.

The foundation bolts may be modeled with boundary elements.

All the other components of tanks and vessels viz. internal piping, nozzle and support, manholes etc. shall be taken into consideration while preparing the finite element model. Tangent and bend elements shall be used for modelling the internal piping if present.

The finite element model of the tank, vessel, heat exchangers (including plate type), and their supports shall adequately represent the realistic dynamic and static characteristics of the equipment. The model prepared both in soft and hard copies shall be forwarded to NPCIL for review and approval before proceeding for further analysis. The assumptions made in the finite element idealization with proper justification shall be brought out in the report. All the inputs used in the data preparation shall be from authenticated document, and shall be attached/referred in the report.

10.1.1.2 **Finite Element Analysis**

The model prepared based on above guidelines shall be analysed by response spectrum analysis using validated software. The response spectrum analysis shall include the addition of modal responses in each direction after accounting for closely spaced modes as per USNRC RG 1.92 and missing mass response as per NUREG 1061 vol. 4 (missing mass is the mass of the equipment which has not participated upto rigid/cutoff frequency) the response upto rigid/cutoff frequency and the missing mass response combined by SRSS and three orthogonal directional response combination by SRSS method.

The tank, vessel, heat exchangers and supports shall be qualified for applicable levels of earthquake viz. OBE alone or OBE and SSE as specified in NPCIL"s specification and in the VGES. Worst combinations of unsigned earthquake stresses with other signed stresses due to non seismic loads, shall be considered for qualification.

The response spectra for SSE and OBE (as per applicable damping) at equipment foundation will be supplied by the NPCIL as applicable.

The applicable damping values as given in Appendix N, of ASME B &PV, Section III, Division 1, Appendices are given below :

	% critical damping	
	OBE	SSE
Equipment	2	3
Internal Piping.	5	5

The loads coming at the nozzle locations on the tank, vessel, Heat Exchanger due to piping reaction shall be used for design and analysis of tank, vessel, Heat Exchanger and their nozzles.

The equipment shall be analysed for various loads viz. design loads, loads during normal and upset conditions (pressure, temperature, mechanical, cycles, transients), including OBE; loads during emergency and faulted conditions (pressure, mechanical), including SSE; test loads, nozzle load due to connected piping etc as specified in NPCIL"s equipment specification and in the VGES. The sloshing effect due to seismic excitation should also be accounted wherever applicable. The hydrostatic & hydrodynamic effects of contained fluid may be accounted as per TID-7024 if applicable.

If the tank, vessel, Heat Exchanger etc is supported at multiple locations & subjected to different seismic motion, then the assembly shall be analysed for seismic anchor movement (SAM). The SAM values at the support locations for OBE & SSE will be given by NPCIL as applicable.

For fatigue analysis if applicable, fifty stress cycles for five numbers of OBEs (ten stress cycles per OBE) and ten stress cycles for one SSE event shall be accounted in addition to the stress cycles due to other loads as specified in the NPCIL"s equipment specification and in the VGES.

10.1.2 **ASME Codal Qualification**

Load combinations to be adopted for ASME Class-1, 2 & 3 tank, vessel & heat exchanger and internal piping and supports for design and various service levels are given in Annexure-1.

The combined stresses in tank, vessel & heat exchanger and internal piping shall meet the relevant codal requirements viz. ASME Section-III, Division-1, Subsection-NB-3000, NC-3000 or ND-3000 whichever is applicable.

The combined stresses in support structure etc. shall meet the requirements of ASME Section-III, Division-1, Subsection-NF-3000.

The combined stresses in the nozzle, as calculated using WRC-297/WRC-107 or any other justifiable method shall meet the requirements of ASME Section-III, Division-1, Subsection NB, NC and ND.

The stresses in the base plate and weld connections if any shall be checked. The stresses may be checked as per NUREG CR-6241, IS 800, IS 456 or any other applicable code. The foundation bolts shall be designed as per ACI 349/318.

If there are any bearings, the load at the bearing locations shall be ensured to be less than the bearing load capacity.

The seismic displacements as obtained by seismic analysis shall be combined with displacements/deflections due to other loads and shall be checked for operational/allowable clearances specified at various critical locations of tank, vessel, Heat Exchanger etc if applicable.

10.2 Documentation

The equipment finite element model and the data giving details viz. nodal coordinates, element type used, element node relationship, material and section properties, lumped masses, rigid elements, and release codes, details as to whether consistent mass matrix or lumped mass matrix, loads applied, boundary conditions etc. shall be submitted for prior approval of NPCIL in both soft and hard copies prior to taking up the analysis. The validation report of the software, describing the benchmark problem used to establish the dynamic analysis capabilities of the package along with the bench marking report shall also be submitted to NPCIL.

The qualification report shall be prepared covering the description of the finite element model, assumptions made in the modeling and their justification, input data with supporting reference documents, name and version of the software used for analysis and its validation, natural frequencies calculated, modal mass participation factors, missing mass correction calculations, equivalent static / response spectrum analysis results viz., stresses and displacements; combination of stresses for different service levels, compliance of stresses with codal requirements, qualification of nozzles & supports and displacements to be within the design clearances (if applicable), bearing reaction less than bearing capacity (if applicable) results, conclusions stating the fulfillment of qualification requirements, etc. shall be submitted to NPCIL for approval.

The finite element model along with analysis input data files and results in hard and soft copies shall be submitted to NPCIL for records.

The analysis reports shall be documented in the form such that the reports shall be self-explanatory and independently reviewable. Guidelines given in Appendix-C of

ASME section III, including the NPCIL VGES procedure are to be followed for the same.

ANNEXURE - 1

Load Combinations for Design Condition and Service Levels for Equipment & Supports

Plant Load Classification	Design/Service level	Load combination
Design	Design condition	Pressure, dead weight, sustained loads, temperature(1)
Normal	Service level A	Normal operating loads and transients (pressure, temperature, mechanical)
Upset	Service level B	Pressure, dead weight, sustained loads, upset condition transients (pressure, temperature(2), mechanical), including OBE(3)
Emergency	Service level C	Pressure, dead weight, sustained loads, temperature(1), emergency condition transients (pressure, mechanical), SSE (3),(4)
Faulted	Service level D	Pressure, dead weight, sustained loads, temperature(1), faulted condition transients (pressure, mechanical), pipe rupture loads, SSE (3)

Note No:

1) Temperature is used to determine allowable stress only

2) Thermal transients under Level C shall also be considered in Level B

3) OBE and SSE include both inertial and Seismic Anchor Movement (SAM)

4) SSE inertial & SAM can be considered in level-C service limits if specified, otherwise SSE inertial and SSE SAM are to be considered in level D only.

ANNEXURE-2

1.0 General Design Guidelines for Equipment

Following points should be taken into account to improve the resistance of equipment to an earthquake-induced vibration:

a) For the portions of the equipment with a certain degree of freedom in design, the position of the center of gravity should be made as low as possible, and the mounting should be as stable as possible.

b) In case when equipment with a lower safety class is closely located to equipment with a higher safety class, it is necessary to check the configuration plan to make sure that the damage to the equipment with a lower safety class due to earthquake does not affect the equipment with a higher safety class.

c) In addition, the seismic supports should be such that they do not cause difficulties in the maintenance and servicing of the machines/ equipment.

d) It is important to avoid, as far as practicable, resonance of equipment, piping, instrumentation and core internals at the frequency of the dominant modes of supporting structures. In most cases, stiffness can be increased to avoid resonance. In some cases, when systems are made stiffer, the effect of thermal stresses, other dynamic loads and differential motions of supporting points may become significant.

e) For S2 Level earthquake ground motion, equipment may enter the range of nonlinear/elasto-plastic behavior. In this case, it is necessary to make sure that the required ductility is present in the system, particularly in the Embedded Parts (EPs). The design of the embedded part (EP) of the support should be such that the failure in concrete is avoided. Therefore, the strength of the load path through concrete should be much more than the strength of the anchorage rod of the EP.

f) Particular attention should be paid to the possibility of collision between adjacent components, or between components and adjacent parts of a building, as a consequence of their dynamic displacement. It is also important to allow for flexibility of connections between such components, between components and building penetrations and underground connections to buildings, as well as between buildings.

2.0 General Design Guidelines for Valves

a) Valves with heavy operators should not be mounted on small lines (< 1" dia) or, valve, operator and the line should be well supported and anchored to the same support structure to avoid overstressing of adjacent piping.

b) Valve operator cantilever length (distance between centerline of pipe to the top of the operator) should not be too large.

c) The valve actuator and the yoke should not be independently braced to the structure unless the pipe is also braced to the same structure immediately adjacent to the valve. If the operator is independently supported from the valve and attached piping, it may act as a pipe support and attract considerable load through yoke and possibly fail or bind the shaft. If both the operator and the valve/pipe are restrained, and if they are both not tied to the same support structure, then differential motion may lead to high seismic loads.

3.0 General Design Guidelines for Panels and Devices

For components such as electrical and instrumentation panels, devices viz. relays, pushbuttons, switches, circuit breakers etc. seismic qualification by testing is the recommended method.

The active components of electrical and control and instrumentation systems get qualified by testing. If the panel/rack is not part of the test, it is essential that the panel/rack be checked for structural integrity by analysis. If the device is qualified for a 3.5 g flat spectrum, it is necessary to show that the acceleration at device location is less than 3.5 g. It has been observed that a significant cause of these systems failing to function properly during and after an earthquake, is lack of anchorage or inadequate anchorage. Analyses should be performed to compare the anchorage capacity to the demand imposed by the seismic loading. This capacity evaluation should extend down to the embedded parts and the concrete structure.

Following guidelines are provided to avoid failure of panels and devices:

a) Oversized washers or reinforcing plates are recommended for thin equipment bases. Lock washers are recommended where even lowlevel vibration exists.

b) There should be no gap at the bolt or stud anchor locations for equipment containing essential relays, since they have the potential for opening and closing due to the load reversals during earthquake. This may cause impact loading on the equipment leading to generation of high frequency vibrations and may result in chatter of essential relays mounted therein.

c) Lack of adequate stiffness in the anchorage raises two concerns. First, the natural frequency could be lowered into the resonance range. Second, it could cause lift up of the cabinet off the floor during an earthquake resulting in high frequency impact loading and chatter of relays. Such inadequate stiffness may arise due to use of thin frame members and clip angles in the construction of motor control centers, switchgear, and instrumentation and control cabinets. Stiff load paths with little eccentricity are preferable for anchorages.

d) Battery racks should have close-fitting, crush-resistant spacers between the cells, which fill about two-thirds of the vertical space between the cells, to avoid rocking and colliding during the earthquake causing malfunction and damage. The battery racks should also have end and side rails, which are close fitting against the cells (with shims, if needed) to avoid tipping the batteries or sliding off the rack.

e) Adjacent cabinets of motor control centers, switchgear, distribution panels, transformers which are close enough to impact each other should be bolted together to avoid unbolted cabinets responding out of phase to one another and impacting each other during an earthquake. The resulting high frequency vibration loadings could cause essential relays to chatter.

f) Cabinets for the above mentioned items should not have large size (> 150 mm wide and 300 mm high) cutouts in the lower half of the cabinet. The concern is that the shear load from the earthquake will not be able to be transferred through the shear walls to the anchorage. Alternatively, the cutouts should be adequately reinforced.

g) All doors and drawout panels should be secured by a latch or a fastener. The concern addressed is that the doors or drawout panels could open during an earthquake and repeatedly impact the housing, causing internal components such as relays and contactors to malfunction or chatter.

h) For floor-mounted units such as battery chargers and inverters, the transformer, which is the heaviest component of this equipment, should be positively anchored and mounted near the base of the cabinet.

i) For temperature sensors, the detrimental differential displacement between the mounting of the connection head and the mounting of the temperature sensor should not occur so as to prevent the wiring to be pulled out of the sensor.

4.0 General Design Guidelines for Active equipments

The guidelines provided for design of structures, systems and component (SSC) by analytical method provide assurance of structural integrity and pressure boundary integrity.

For active components, viz., valves, pumps, fans, blowers, motors, compressors, diesel generators; electrical; and instrumentation panels devices viz. relays, pushbuttons, switches, circuit breakers etc. apart from structural and pressure boundary integrity, an assurance is also required about the functionality of the equipment during and/or after earthquake. The performance of some „active" equipment (e.g. pumps, valves and diesel generator sets) under earthquake conditions can be calculated with adequate confidence by analysis, when their potential failure modes can be identified and described in terms of stress, deformation (including clearances) or loads. Typically this would involve calculating the relative displacement between the members likely to rub against each other and showing existence of adequate clearance to justify its functionability. The integrity of shaft bearings should also be assessed for the seismic loads. This specific requirement should be a part of the component specifications. It should be understood that a high level of analytical sophistication requires a number of assumptions and produces at best only an indicator of seismic behavior. Therefore, it is recommended that test or experiment be conducted to validate such analytical results, particularly with regard to functionality of the equipment.

When functionality of typical equipment has been demonstrated by analytical or experimental means for an earthquake motion, similar equipment can be considered qualified.

For horizontal Pumps, fans and motor generators, the driver and the driven component should be connected by a rigid base or common skid to avoid differential displacement between the driver and the driven component, which could cause shaft misalignment.

For vertical pumps, the impeller shaft and casing should not be cantilevered for more than 6 m below the pump mounting flange. It should have a radial bearing at the bottom of the casing to support the impeller shaft. Otherwise, there is a possibility of misalignment and bearing damage due to excessive lateral loads, damage to the impeller due to excessive displacement and damage due to interfloor displacement on multi-floor supported pumps.

5.0 General Design Guidelines for tanks and vessels

As far as the pressure vessel itself is concerned, usually the plate thickness is controlled by the pressure (and not by seismic load) and the effect of the seismic force on the equipment is relatively small in comparison with the normal stress during operation. However, for the support structure, since the seismic force is dominant, appropriate strength check should be made considering the seismic force. It is also necessary to ensure enough stiffness for the support, particularly, in the design of the anchorage, where there is a likelihood of damage. It is of particular importance to ensure that base plates are sufficiently stiff to avoid prying effects and that anchor bolts are adequately tightened to avoid rocking effects, lowered frequencies, increased response levels, higher-than-design loads and increased risk of loosening, pull-out or fatigue. Over-designed or redundant bolts, pre-loaded on installation to the tensile force expected during a seismic event are therefore recommended.

All safety related mechanical equipment, such as tanks, vessels and heat exchangers, piping and supports must be qualified to demonstrate structural integrity and pressure boundary integrity when subjected to earthquake loads. Dynamic modal analysis using time history or floor response spectrum (floor response spectrum in this case) method is certainly the most accurate procedure, but equivalent static method is also acceptable.

For equipment such as (i) Vertical vessel with skirt support, (ii) Vertical vessel with leg support, and (iii) Horizontal vessel on two saddle type supports; an equivalent beam model can be constructed. The seismic response is predominantly associated with the first mode. Hence, it is sufficient to use spectral acceleration at the first frequency to calculate the equivalent static loads (equipment mass x spectral acceleration). A static analysis is then performed by applying this force to calculate the stresses in vessel as well as in supports. The equivalent static force together with the overturning moment acts on the anchorage system and should be designed to withstand them.

ANNEXURE-3

List of Shake Table Test facilities in India

S.No.	Shake Table Test facility	Size	Capacity	Frequency range (Hz)	Acceleration (g)
1.	ERDA, Vadodara	0.6m x 0.6m	150 Kg Uniaxial shaketable	1-50	3.5
2.	ECIL, Hyderabad	1m x 1m, 35 cm stroke length	100 Kg Uniaxial shaketable	1-50	3.5
3.	SERC, Chennai	4m x 4m, 4 vertical & 4 hori. Actuators	30 T Triaxial shaketable	0.1-50	1.0
		2m x 2m	5 T Uniaxial shaketable	5-50	3.0
		3m x 3m	10 T Triaxial shaketable	0.1-50	1.0
4.	CPRI, Bangalore	3m x 3m, 4 ver & 4 hor actuators	10 T Triaxial table	0.1-50	1.0
5.	IGCAR, Kalpakkam	3m x 3m, 4 ver & 4 hor actuators	10 T Triaxial table	0.1-50	1.0
6.	IIT Roorkee	3.5m x 3.5m, 2 ver & 1 hor actuator	20 T Biaxial shaketable	0.1-50	1.0
7.	IIT Kanpur	1.2m x 1.8m	4 T , Uniaxial shaketable	NA	NA
8.	IIT Guwahati	2.5m x 2.5m, stroke length=500mm, max horizontal acceleration = 2g	5 T, Uniaxial shaketable	NA	NA
9.	IIT Mumbai	1.2m x 1.2m	1 T, Uniaxial shaketable	NA	NA

Note:

1. Above details are for information and guidance only.
2. Other electrodynamic/hydraulic shake tables at test facilities like ERTL Labs, CWPRS Pune, ARAI Pune, FCRI Pallakkad Kerala and any other test facilities which can meet the test specification may be explored and shaketable specification may be forwarded to NPCIL for approval prior to actual seismic test on equipment.
3. NA: not available

ANNEXURE-4

Static side load test

1. Purpose

Static side load testing is a seismic test intended to demonstrate the functional capability of the combination of a QME-1 qualified valve and a QME-1 qualified actuator when subjected to loading that is representative of a specified seismic load qualification level.

2. Definition

Rigid Equipment: Equipment, structures, and components whose lowest natural frequency is greater than the frequency value at the start of the zero period acceleration (ZPA) or the cut-off frequency of the applicable response spectrum.

Essential-to-function parts/components: those parts or components of the assembly that are essential to cause, permit, or enable the assembly to perform the specified accident-condition function or whose failure could prevent the performance of this function.

3. GENERAL REQUIREMENTS

a). Static side load testing shall be performed on the QME-1 qualified valve assembly under the seismic load to which the valve assembly is to be qualified. The adequacy of qualification testing performed under this Code Case shall be evaluated where differential pressure cannot be maintained sufficiently to simulate the full range of design-basis conditions for which the valve/actuator assembly is being qualified.

b). The magnitude of the seismic loading is determined to simulate the effect of the specified triaxial acceleration g-levels for which the valve assembly is to be qualified. A single axial force concentrated at the center of gravity of the valve extended structure, and applied along the least rigid axis (unless a more critical axis can be determined) may simulate specific seismic g-loads. If desired, increased seismic g-levels may be used to extend the seismic qualification to similar constructions.

1. The first step in calculating the seismic test load force, Ft, is to convert the triaxial acceleration g-level components, acting on the valve assembly, into a single resultant axial acceleration g-level by using the

square-root-sum-of-squares (SRSS) method. If acceleration at the valve location is not available then 1.5 times the floor peak acceleration (corresponding to 2% for OBE and 3% for SSE) shall be used as the g-values. This single axial g-level is then multiplied by the weight of the valve assembly extended structure to obtain a qualification load force Fq. This qualification load force may need to be further adjusted to compensate for the effects of gravity on the test valve assembly, depending upon the orientation of the valve assembly during the test and minor adjustment of the location of the test load force to assure contact with a structural member. Regardless of the location, the load must still create an equivalent moment in the most highly stressed location of the extended structure.

2. The test load force, Ft, is determined to ensure adequate margin to account for any dimensional or material tolerance differences between the test valve assembly and any production valve assemblies. Unless a different factor is justified to account for material and dimensional tolerances, the following relationship should be used to determine the test load force:

$$Ft \geq (A)(Fq)$$

where:

Ft = test load force, lbf (N)
Fq = required qualification load force, lbf (N)
A = multiplication factor, dimensionless
= 1.10 (test margin) if the valve assembly is determined to be rigid, or
= 1.65 (amplification coefficient of 1.5 plus test margin) if the test valve assembly is determined to be flexible

c). Test Pressure, psig (kPag).

For Power Actuated Valve Assemblies as per QME-1, QV-7450, the test operating pressure shall be the design pressure rating, but no greater than the 100°F (38°C) cold-working pressure rating for the valve assembly being qualified. The test operating pressure shall be greater than that for which the test valve assembly is to be qualified by a factor equal to the ratio of the actual test bar yield strength of the tested body material divided by the specified minimum yield strength of the body material, but no greater than 1.5 times the 100°F (38°C) cold-working pressure rating.

d). Test Differential Pressure, psig (kPag). The test differential pressure shall be the pressure differential maintained across the valve disc during the opening stroke. The value of the differential test pressure shall be determined by valve/actuator margin analysis calculations. The test differential pressure is not considered a rating value for the actuator or valve, but creates a repeatable test condition for diagnostic data comparison.

e). All essential-to-function accessories shall be attached to the valve assembly to satisfy the rigidity requirements of QME-1, QV-7450(b). The essential-to-function accessories that have not been previously qualified in accordance with IEEE-344 as part of the actuator assembly shall be seismically qualified by test in accordance with the test section of IEEE-344 per QME-1, QV-7450(b).

f). Testing will be performed at normal room temperature, not to exceed 100°F (38°C).

5.0 TEST METHOD

5.1 Power Operated Valve Assemblies

a). The valve assembly shall be installed in a test fixture with suitable provision for imposing the static test load, and such that the valve assembly is mounted by its normal mounting points (usually the valve body ends). The valve mounting shall be sufficiently rigid to resist the applied seismic load and ensure that the load force remains essentially perpendicular to the centerline of the valve extended structure. The test load force, Ft, shall be applied as described in 4(b)(1) above.

b). The seismic functionality test shall be made starting with one full operating cycle utilizing normal motive power. With the valve fully open, the valve body is maintained at the designated test pressure (as defined in 4(c) above), and valve closure is initiated. Following valve closure, establish the test differential pressure (as defined in 4(d) above) in the specified flow direction (or in the most adverse direction for bidirectional valves). Valve opening is then initiated. Differential pressure need not be maintained after the test valve assembly is unseated. Thrust (and/or torque), diagnostic data and stroke time measurements in both directions are to be recorded to establish baseline measurements. For guidance, see QME-1, Section QV-G, "Guide to Section QV: Determination of Valve Assembly Performance Characteristics."

c). With the valve in the open position, test operating pressure (as defined in 4(c) above) shall be established in the valve, and (while pressure is maintained) the test load force, Ft, shall be applied as specified in 4(b)(2) above. Deflection measurements of the extended structure are to be recorded.

d). While maintaining the test load force, Ft, a seismic functionality test shall then be performed in accordance with 5.1(e), and 5.1(f) below.

e). Three full operating cycles shall be performed with the test valve depressurized and utilizing the maximum motive power for actuation. Data, similar to 5.1(b) above, shall be taken for comparison to the baseline measurements.

f). Three full operating cycles shall be performed utilizing minimum motive power. With the valve fully open, the valve is pressurized at the designated test pressure and valve closure shall be initiated and timed. Following valve closure, establish the test differential pressure in the specified flow direction (or in the most adverse direction for bidirectional valves). Valve opening is then initiated. Differential pressure need not be maintained after the test valve assembly is unseated. Data, similar to 5(b) above, shall be taken for comparison to the baseline measurements.

g). With the valve in the open position, remove the test load force, Ft, and record deflection measurements of the extended structure.

h). Repeating test 5.1(b) above, finish testing with one full operating cycle utilizing normal motive power. With the valve fully open, the valve body is maintained at the designated test pressure (as defined in 4(c) above) and valve closure is initiated. Following valve closure, establish the test differential pressure (as defined in 4(d) above) in the specified flow direction (or in the most adverse direction for bidirectional valves).Valve opening is then initiated. Differential pressure need not be maintained after the test valve assembly is unseated. Data, similar to 5.1(b) above, shall be taken for comparison to the baseline measurements.

ANNEXURE-5

Sample Seismic Test Procedure for Valve/Valve actuator/ Instrument/Device

a) **Mounting arrangement** :

Mount the Valve/Valve actuator/ Instrument/Device (here in after called as test sample) on the shake table with a suitable fixture, simulating the actual mounting condition in the plant, meeting the requirements specified in section 8.1.1 of IEEE-344. The mounting arrangement shall be proposed by the supplier for approval of NPCIL.

b) **Monitoring Requirements During Testing** :

Necessary arrangements shall be made to assess the functional operability of test sample as required, meeting the requirements specified in section 8.1.2 of IEEE-344 and NPCIL equipment technical specification. The detail scheme for the monitoring function shall be proposed by the supplier, subject to approval of NPCIL.

c) **Aging Requirements** :

Prior to the seismic test, the test sample shall be subjected to applicable environmental aging mechanisms, such as thermal aging, radiation aging etc., as mentioned in 8.2.1.1 of this specification and as detailed in the respective NPCIL equipment specifications according to the qualified life of test sample. However, vibrational aging and OBE seismic testing are not required to be done on the test sample as the SSE test accelerations are enveloping OBE accelerations as well as vibrational aging due to number of sinusoidal tests in all three directions separately each for 30 seconds during SSE test as mentioned below.

d) **Resonance Search Test:**

Sine sweep test (Resonant frequency search test) shall be conducted on the equipment, varying the frequency at the rate of 1 octave/minute from 1 Hz to 100 Hz or cutoff frequency as applicable (up sweep) and 100 Hz or cutoff frequency as applicable to 1 Hz (down sweep) maintaining acceleration at constant magnitude of 0.2g to determine the resonant frequencies of the equipment. Structural response in terms of acceleration and strains shall be monitored by mounting the accelerometers and strain gauges at the pre-identified locations on the equipment being tested. Sine sweep test can be conducted in both vertical and horizontal axes. Resonance frequencies in all the three axes shall be identified in the frequency range of 1.0 Hz to 100 Hz or cutoff frequency as applicable. The Resonant frequency search test parameters are shown in Table below:

1	Type of Motion	Sinusoidal sweep
2	Axis of Motion	X,Y & Z
3	Frequency range	1.0 to 100 Hz or cutoff frequency as applicable
4	Acceleration	0.2g
5	Sweep rate	1.0 Octave/minute

Based on the results of resonant search test, if no malfunction or no natural frequency is observed below 10 Hz then acceleration levels for single axis test can be lowered in low frequency range with prior approval from NPCIL. However, it should be ensured during resonant search test that devices are in energized condition and proper functional and response monitoring is ensured by suitable monitoring measures.

e) **Seismic Test Procedure (SSE Test)** :

i) **Motion** : Sinusoidal

ii) Frequently Range : 1 Hz to 100 Hz or cutoff frequency as applicable

iii) Test Frequencies : 1.0 Hz, 1.26 Hz, 1.59 Hz, 2.0 Hz, 2.52 Hz, 3.17 Hz, 4.0 Hz, 5.04 Hz, 6.35 Hz, 8.0 Hz, 10.08 Hz, 12.67 Hz, 16.0 Hz, 20.16 Hz, 25.0 Hz, 32.0 Hz, 40.31, 50.8 Hz, 57.02 Hz, 64 Hz, 71.84 Hz, 80.63 Hz, 90.51 Hz, 100 Hz.

iv) Peak acceleration : The peak acceleration at frequencies 1.0 Hz, 1.26 Hz, 1.59 Hz, 2.0 Hz, 2.52 Hz, 3.17 Hz shall be preferably between 1.0g and 3.5g or to the capability of shake table. However at these frequencies, excitation must be continued to be maintained to the capability of shake table. For and beyond 4 Hz the peak acceleration shall be 3.5 g as a minimum or to the capability of shake table. Beyond 50.0 Hz, the acceleration shall be maintained about 1.0g or to the capability of shake table.

v) Test duration : 30 Sec. at each test frequency

vi) Test axes : Test shall be carried out in 2 orthogonal horizontal axes and vertical axis (one axis at a time).

vii) The procedure for seismic qualification test of valve/valve actuator/instrument/device on shake table covering details of mounting arrangement, monitoring arrangement, shake table description, test sequence etc., shall be prepared as per the clauses given in applicable NPCIL equipment technical specification and/or IEEE-344 and shall be submitted to NPCIL for prior approval.

viii) The accelerations calculated at location of mounting of devices in stands, racks, cabinets, panels or line mounted devices, should be shown to be less than test accelerations by carrying out analysis of stands/racks/panels/ cabinets/piping either by vendor or NPCIL as per applicable scope in tender specification.

ix) The seismic qualification test on shake table shall then be performed at the test facility and shall meet the requirements of IEEE-344 and/or NPCIL approved test procedure for seismic qualification of respective valve/valve actuator /instrument/device.

f) **Test Acceptance Criteria** :

The test sample shall meet the performance requirements during and after completion of the tests as specified in applicable NPCIL equipment technical specification/NPCIL approved test procedures.

g) **Test Report** :

The external laboratory conducting this test shall issue an approved test report consisting mainly of the following:

i) Copy of approved seismic qualification test procedure.

ii) Description of test sample along with its mounting and monitoring procedure

iii) Specification of test facility

iv) Mounting arrangement with photograph

v) Video recording in the form of DVD/pen drive of the complete shake table testing.

vi) Performance results of the test sample.

ANNEXURE-6

Impact Hammer Test for Frequency Determination of Valves

Impact hammer test shall be used for estimation of modal frequencies of the valves. The test will require impact hammers instrumented with a force transducer to measure the impact force, response measuring transducers (accelerometers) to measure the response caused by the known impact force, signal conditioners to condition the signal for the required frequency band and amplification, two channel signal analyser for signal analysis; and for computing frequency response function and coherence function. The model frequencies shall be estimated by appropriate analytical curve fitting method.

The particular characteristics of each element of the test are described below:

1. **Impact Hammer:** The impact hammer shall have a built in force transducer. Two important characteristics of impact hammer are its weight and tip hardness. Appropriate range hammer with selectable tip (soft, medium and hard) shall be used. The force transducer shall be integrally fixed on the hammer for impact force measurement.

2. **Response Transducer (accelerometers)**: Transducer shall be used for measurement of response at atleast two locations on the valve body. Sensor sensitivity shall be high enough to get repeatable signal above background noise.

3. **Signal Conditioning Units**: The units shall be suitable for low signal-to-noise ratio (40dB) and must be able to detect over load in the response signal.

4. **Analysis System**: Two-channel dynamic signal analyser shall be used. The analyser shall have zoom transform capability, appropriate window functions for impulse input signal and decaying response signals, and analytical curve fitting capability to extract modal properties.

Measurement Procedure

1. The valve assembly should be mounted in the rigid flange fixture. This fixture should be anchored to the anchor bolts embedded in rigid heavy mass concrete platform. The machinery noise in the shop should be minimal.

2. Frequency Response Measurement (FRF) shall be made at many locations on the valve body to identify major resonances. Use impact hammer of appropriate weight and tip hardness. Determine two best locations along each axis for mounting response accelerometer either by a strong magnet or by adhesive.

3. Check the repeatability of FRF Test. Preload the valve body (if required) to minimize non-linearities caused by gaps and clearances. Confirm low non-linearity effect on the response signal by coherence measurement.

4. Ensure that input signal is not zero in the frequency band of interest.

5. Monitor input force signal and apply appropriate window function. Reject poor measurement. Ensure input auto spectrum.

6. Monitor response signals and apply exponential decay window. Reject poor measurement and overload.

7. Determine FRF from the ratio of Cross Spectrum to Power Spectrum of input signal. Average (at least 24) and process the signal to minimize bias error in the estimation of the Cross-Spectrum. Estimate the coherence function to monitor the quality of FRF measurement.

8. Display FRF as magnitude versus frequency in logarithmic scale. Display phase versus frequency in linear scale.

9. Estimate modal parameter (if specified) by fitting an analytical curve on the FRF function. Ensure reasonable fit for good estimation of modal properties.

10. Perform zoom analysis around closely spaced modal frequency (Resolution 10:1).

11. Determine the phase between two measurement locations (along the axis) at the identified natural frequencies.

12. Include one set of prints of input auto spectrum, FRF and coherence function, phase angle etc. for each direction of test in the report.

ANNEXURE-IV

REFERENCE FOR BUTTERFLY VALVE IN NPCIL DRAWINGS									
SL NO.	KKS NOS.	TYPE OF VALVE	SIZE mm (NB)	OPERATION	BUILDING / LOCATION	WD NUMBER	SHEET NO	ELEVATION	REMARKS
1	PUQ10AA103, PUQ20AA103, PUQ10AA104, PUQ20AA104,	BFV	150	MANUAL	UQZ	R37.KK34.**31UQZ**.PUQ.TW.OK.WD001	Sheet 10 and 11 Item no 05	ELEVATION: 5.650M	10AA and20 AA valves refer 31UQZ drw.
2	PUQ30AA103, PUQ40AA103, PUQ30AA104, PUQ40AA104	BFV	150	MANUAL	UQZ	R37.KK34.**32UQZ**.PUQ.TW.OK.WD001	Sheet 9 and 10 Item no 05	ELEVATION: 5.650M	30AA and40 AA valves refer 32UQZ drw.
3	PUQ10AA105, PUQ20AA105, PUQ10AA106, PUQ20AA106,	BFV	200	MANUAL	UQZ	R37.KK34.**31UQZ**.PUQ.TW.OK.WD001	Sheet 3&4 Item no 14,17,26,34	ELEVATION: (-)0.7M	10AA and 20 AA valves refer 31UQZ drw
4	PUQ30AA105, PUQ40AA105, PUQ30AA106, PUQ40AA106	BFV	200	MANUAL	UQZ	R37.KK34.**32UQZ**.PUQ.TW.OK.WD001	Sheet 3&4 Item no 05,08,18,21	ELEVATION: (-)0.7M	30AA and 40 AA valves refer 32UQZ drw
5	PUQ10AA101, PUQ20AA101, PUQ10AA102, PUQ20AA102	BFV	80	MANUAL	UQZ	R37.KK34.**31UQZ**.PUQ.TW.OK.WD001	Sheet 5 – 9 Item no 10,31,56,74	PUQ10AA101, PUQ20AA101 (+)5.288M PUQ10AA102, PUQ20AA102: (+)4.951M	10AA and20 AA valves refer 31UQZ drw.
6	PUQ30AA101, PUQ40AA101, PUQ30AA102, PUQ40AA102	BFV	80	MANUAL	UQZ	R37.KK34.**32UQZ.**PUQ.TW.OK.WD001	Sheet 5 – 8 Item no 10,31,56,74	PUQ30AA101, PUQ40AA101 (+)5.288M PUQ30AA102, PUQ40AA102: (+)4.951M	30AA and40 AA valves refer 32UQZ drw
7	GML31AA101, GML32AA101, GML31AA108, GML32AA108, GML31AA201	BFV	80	MANUAL	UQA	R37.KK34.**30UQA.GML**.WK.OK.WD001	Sheet 5, 12 Item no 51, 22	GML31AA101, GML32AA101, GML31AA108, GML32AA108: (-)5.613M GML31AA201: (-)4.91M	-

Ведомость рабочих чертежей основного комплекта
List of working drawings of the main set

Таблица 1
Table 1

Лист Sheet	Наименование Name	Примеч. Note
1	Общие данные General data	
2	Фрагменты планов на отметке -3,000; +3,450. Разрезы по 2-2; 3-3 Fragment of plans at elevations -3,000; +3,450. Sections 2-2; 3-3	
3	Разрезы 1-1; 4-4. Аксонометрическая схема 3GML10 Sections 1-1; 4-4. Axonometric scheme 3GML10	
4	Фрагмент плана на отметке -7,050. Установочный чертеж насосного агрегата Fragment of plan at elevation -7,050. Installation drawing of pumping unit	
5	Разрез 6-6, 7-7. Узлы A, B, C Section 6-6, 7-7. Details A, B, C	
6	Фрагменты планов на отметках -3,000; +3,450. Разрез 5-5 Fragment of plans at elevations -3,000; +3,450. Section 5-5.	
7	Аксонометрические схемы 3GML20, 3GML30 Axonometric schemes 3GML20, 3GML30	
8	Установка уровневых датчиков в приямках Installation of level switches in sump pit	
9	Крепления трубопроводов 3GML10. Тип IV. Спецификация Fixing of pipelines 3GML10. Type IV. Specification	
10	Крепления трубопроводов 3GML20. Тип I... ТипIII. Спецификация Fixing of pipelines 3GML20. TypeI... TypeIII. Specification	
11	Крепления трубопроводов 3GML30. Тип V. Спецификация Fixing of pipelines GML30. TypeV. Specification	
12	Спецификация Specification	

Условные обозначения
Legend

Таблица 2
Table 2

Обозначение Designation	Наименование Name
	Задвижка стальная сварная клиновая с выдвижным шпинделем фланцевая Steel welded wedged gate valve with telescopic spindle, flange connected
	Обратный клапан Check valve
	Трап Dn100 Trap Dn100
	Прочистка Clean-out
	Крепление трубопроводов Fixing of pipelines
—GML10—	Система сбора и отвода промышленных стоков после автоматического пожаротушения (безнапорная) System of fire extiguishing wastes disposal (gravity system)
—GML20—	Система сбора и отвода промышленных стоков после автоматического пожаротушения (напорная) System of fire extiguishing wastes disposal (pressure system)
—GML30—	Система откачки дренажа из основной насосной станции (напорная) Drainage pumping out system of the main pump house (pressure system)

Общие указания

1 Рабочие чертежи разработаны в соответствии с контрактом N 77-258/1415800 на разработку рабочей документации.

2 Рабочая документация разработана в соответствии с действующими нормами, правилами и стандартами РФ.

3 Системы водопровода и канализации относятся к системам нормальной эксплуатации, элементы систем имеют классификационное обозначение 4Н по ПНАЭГ-1-011-97 'Общие положения обеспечения безопасности атомных станций' (ОПБ-88/97).
Категория сейсмостойкости III по ПНАЭГ-5-006-87 'Нормы проектирования сейсмостойких атомных станций'.

4 Монтаж и испытания систем водопровода и канализации должны быть произведены в соответствии с требованиями СНиП 3.05.01-85 'Внутренние санитарно-технические системы'.

5 После монтажа и гидравлического испытания трубопроводы окрашиваются в соответствии с ГОСТ 14202-69.

6 Окрасить наружную поверхность стальных трубопроводов по схеме:
- цинк наполненная эпоксидная грунтовка ЗП-057 (ТУ6-10-1117-85) в 2 слоя толщиной 100 мкм
- эпоксидная эмаль ЗП-525 (ГОСТ22438-85 в 4 слоя толщиной 100мкм). Толщина покрытия не менее 200 мкм

7 Отметки указаны в системе MSL. И даны по осям труб.

8 Металлические трубы системы сбора и отвода промышленных стоков присоединить к системе заземления согласно СНиП 3.05.06-85.

General guidelines

1 The working drawings have been developed in compliance with Contract № 77-258/1415800 on the working drawings preparation.

2 Working drawings have been developed in accordance with the valid codes, regulations and standards of the Russian Federation.

3 Water supply and sewerage systems fall under the systems of normal operation; classification designation of elements - 4H as per PNAEG-1-011-97 'General Provisionsfor Assurance of Safety at Nuclear Power Stations' (ОПБ-88-97)
Earthquake resistance category III as per PNAEG-5-006-87 'Code for Designing Earthquake - Resistant Atomic Station'.

4 Erection and tests of water supply and sewerage systems shall be performed in compliance with the Code of pracfice SNiP 3.05.01-85 'Indoor sanitary engineering systems'

5 After their instalation and the hydraulic test the pipes are to be painted with oil paint two times in accordance with GOST 14202-69.

6 To paint the outer surface of steel pipelines as follows:
-zink-filled epoxy prime coat ЗП-057(ТУ6-10-1117-85), two coats, 100 mkm thick
-epoxy enamel ЗП-525 (GOST 22438-85), 4 coats, 100mkm thick. Coat thickness shall be not less than 200mkm

7 Elevations are indicated in MSL system. Also are given on axises of pipes.

8 Steel pipes of system of collection and disposal of fire-fighting wastes shall be connected to earthing system according to SNiP 3.05.06-85.

СХЕМА РАСПОЛОЖЕНИЯ
KEY PLAN

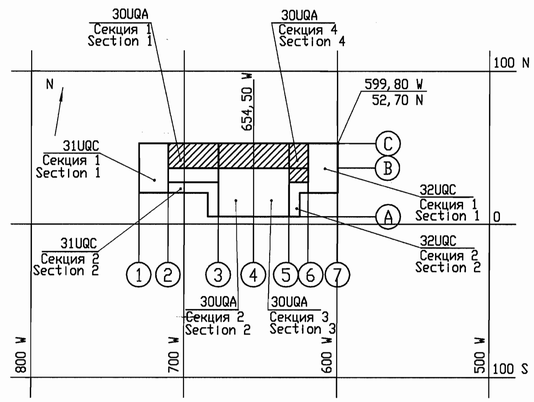

Ведомость ссылочных документов
Table of reference documents

Таблица 3
Table 3

Обозначение Designation	Наименование Name	Примечание Note
Шифр пакета 3 5 2 30 Package Number R28. KK34. 30UQA. PA. KZ. ПК. WD017	30UQA Секция 2,3 с отметки -7,200 до отметки -3,100. Геометрия 30UQA Section 2,3 from elevation -7,200 up to elevation -3,100. Geometry	
Шифр пакета 3 5 2 41 Package Number R28. KK34. 30UQA. PA. KZ. ПК. WD025	30UQA Секция 1 с отметки +2,850м до отметки +6,800м оси 2-3. Геометрия 30UQA Section 1 from elevation +2,850m to elevation +6,800m axes 2-3. Geometry	
Шифр пакета 3 5 2 1 Package Number R28. KK34. 30UQA. PA. KZ. ПК. WD013	30UQA Секция 4 с отметки -7,150 до отметки -3,100. Оси 5-6. Геометрия 30UQA Section 4from elevation -7,150 up to elevation -3,100. Axes 5-6. Geometry	
Шифр пакета 3 5 2 42 Package Number R28. KK34. 30UQA. PA. KZ. ПК. WD027	30UQA Секция 4 с отметки +2,850 до отметки +6,750. Геометрия 30UQA Section 4from elevation +2,850 to elevation +6,750. Geometry	

Таблица 3 (продолжение)
Table 3 (continued)

Обозначение Designation	Наименование Name	Примечание Note
Шифр пакета 3 6 2 3 Package Number R28. KK34. 30UQA. PA. KZ. ПК. WD023 R28. KK34. 30UQA. PA. KZ. ПК. WD053	30UQA Секция 2,3 с отметки -3,300 до отметки +2,850 в осях B-C. Геометрия 30UQA Section 2,3 from elevation -3,300 up to elevation +2,850 axes B-C. Geometry	
Шифр пакета 3 6 2 14 Package Number R28. KK34. 30UQA. PA. KZ. ПК. WD055	30UQA Секции 2,3 с отметки +2,850м до отметки +6,800м. Геометрия 30UQA Sections 2,3 from elevation +2,850m to elevation +6,800m. Geometry	

Package Number 3 8 6 75

Rev	Issue	Issued for	Signature	Issue sheet N

File: R28 KK34 30UQA GML WK ПК WD001_001=0

Принял Accepted	Kats	JSC 'Atomenergoproekt' Moscow 2018
Arch. No	Date	

При переписке в ссылке на документ (лист документа) следует указать его обозначение, приведенное в основной надписи

In correspondence referring to the document (sheet of the document) it is nesessary to specify its designation, given in the basic inscription

Данный чертеж не подлежит размножению и передаче другим организациям и лицам без согласия ОА'ИНСТИТУТ ГИДРОПРОЕКТ'

This drawing is not to be reproduced or transferred to other organizations or private persons without approval of the JSC 'INSTITUTE HYDROPROJECT'

Изм. Rev.	N уч. N pat.	Лист Sheet	N док. Docum N	Подпись Signat.	Дата Date
Утвердил Approved			Ratnikov		02.18
Н. контр. Inspector			Gorskaya		04.18
Разраб. Designed			Dudov		03.18

NUCLEAR POWER CORPORATION OF INDIA LTD

R28. KK34. 30UQA. GML. WK. ПК. WD001

АЭС 'КУДАНКУЛАМ' БЛОК 3
NPP 'KUDANKULAM' UNIT 3

30UQA
Система сбора и отвода промышленных стоков после автоматического пожаротушения. Дренаж
30UQA
System of collection and disposal of fire-fighting wastes. Drainage

Стадия Phase	Лист Sheet	Листов Sheets
WD	1	12

Общие данные
General data

JSC Institute Hydroproject MOSCOW 2018

формат А1

Inv. Nr. 27993 Date 25.07.18
Orig. arch. № 723725
Копия арх. № | Date 02.18
0 005007237251

План на отметке -3,000
Plan at elevation -3,000

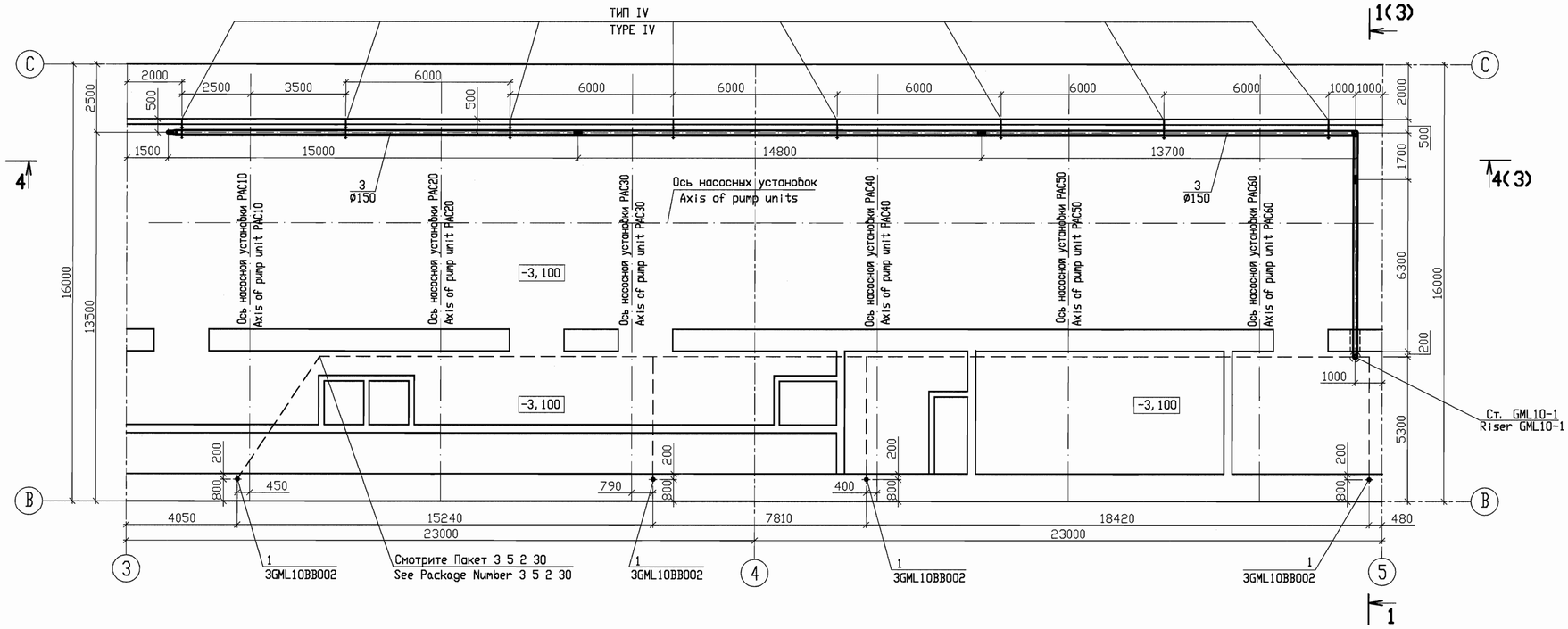

2-2

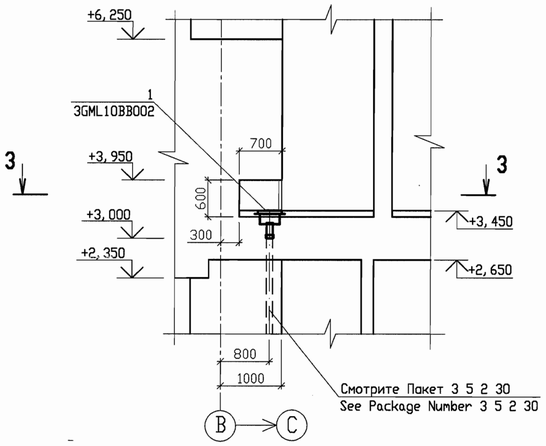

3-3

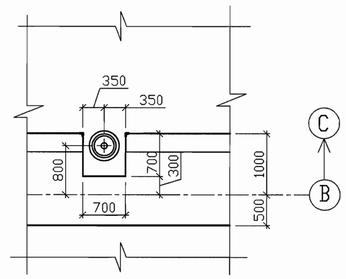

План на отметке +3,450
Plan at elevation +3,450

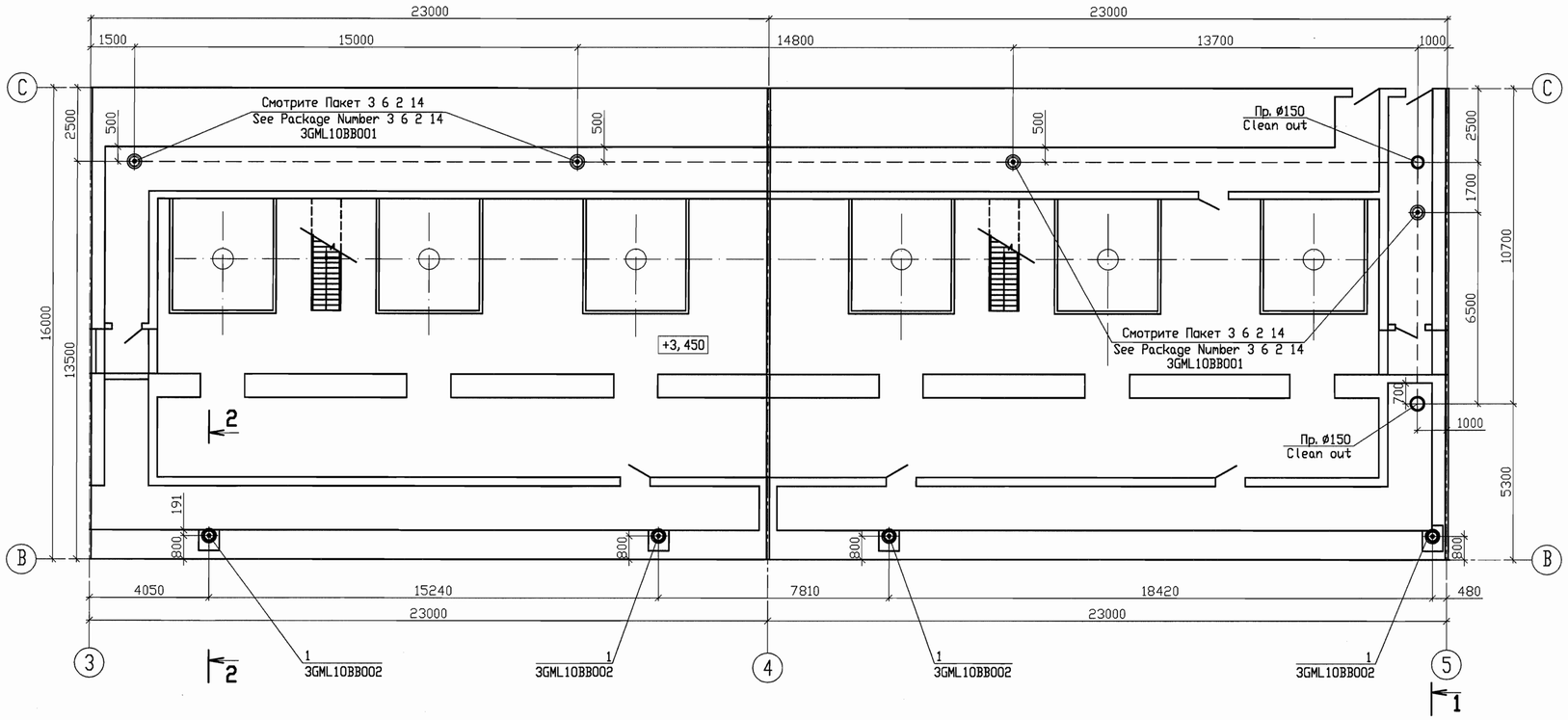

СХЕМА РАСПОЛОЖЕНИЯ
KEY PLAN

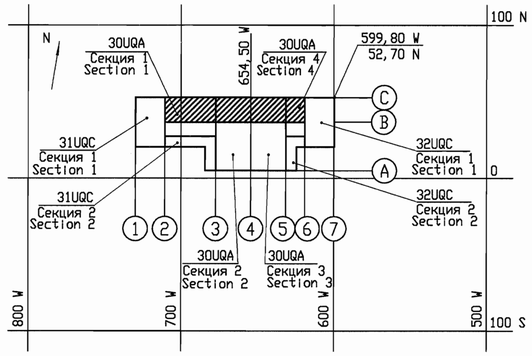

Package Number 3 8 6 75
File: R28 KK34 30UQA GML WK DK WD001,002=0

Данный чертеж не подлежит размножению и передаче другим организациям и лицам без согласия ОА "ИНСТИТУТ ГИДРОПРОЕКТ"

This drawing is not to be reproduced or transferred to other organizations or private persons without approval of the JSC "INSTITUTE HYDROPROJECT"

Изм.	N уч.	Лист	N док.	Подпись	Дата
Rev.	N pat.	Sheet	Docum N	Signat.	Date
Утвердил Approved		Dudov			07.11
Н. контр. Inspector		Gorskaya			07.18
Разраб. Designed		Gorskaya			07.18

R28. KK34. 30UQA. GML. WK. DK. WD001

АЭС "КУДАНКУЛАМ" БЛОК 3
NPP "KUDANKULAM" UNIT 3

30UQA
Система сбора и отвода промышленных стоков после автоматического пожаротушения. Дренаж
30UQA
System of collection and disposal of fire-fighting wastes. Drainage

Фрагменты планов на отметке -3,000; +3,450. Разрезы 2-2; 3-3
Fragment of plans at elevations -3,000; +3,450. Sections 2-2; 3-3

Стадия	Лист	Листов
Phase	Sheet	Sheets
WD	2	

JSC Institute Hydroproject MOSCOW 2018

формат A1

Inv.Nr 27993 Date 25.07.18
Replace arch. Nr
Date 07.18
Orig. arch. Nr. 723725

1-1 (2)

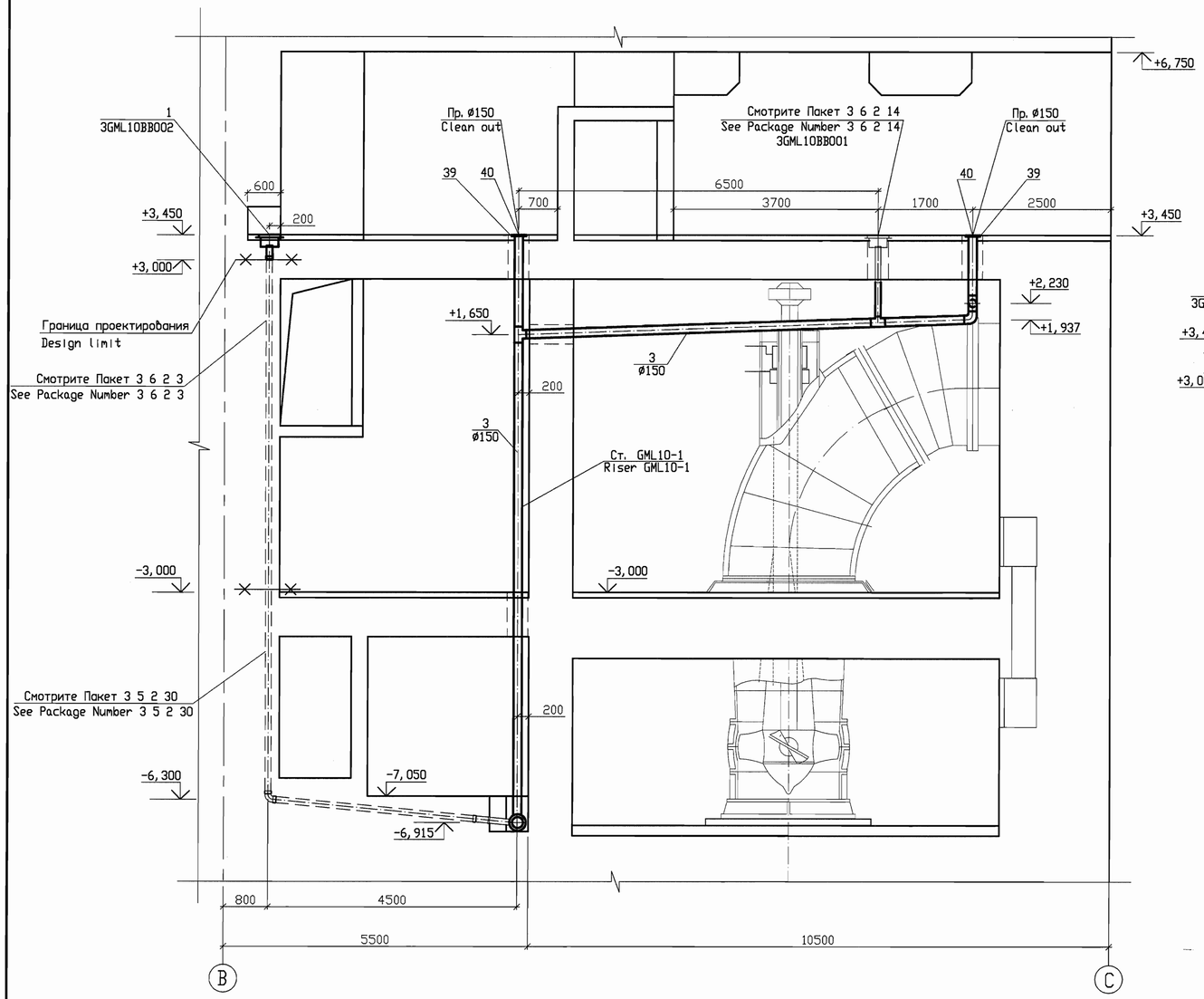

Аксонометрическая схема 3GML10
Axonometric scheme

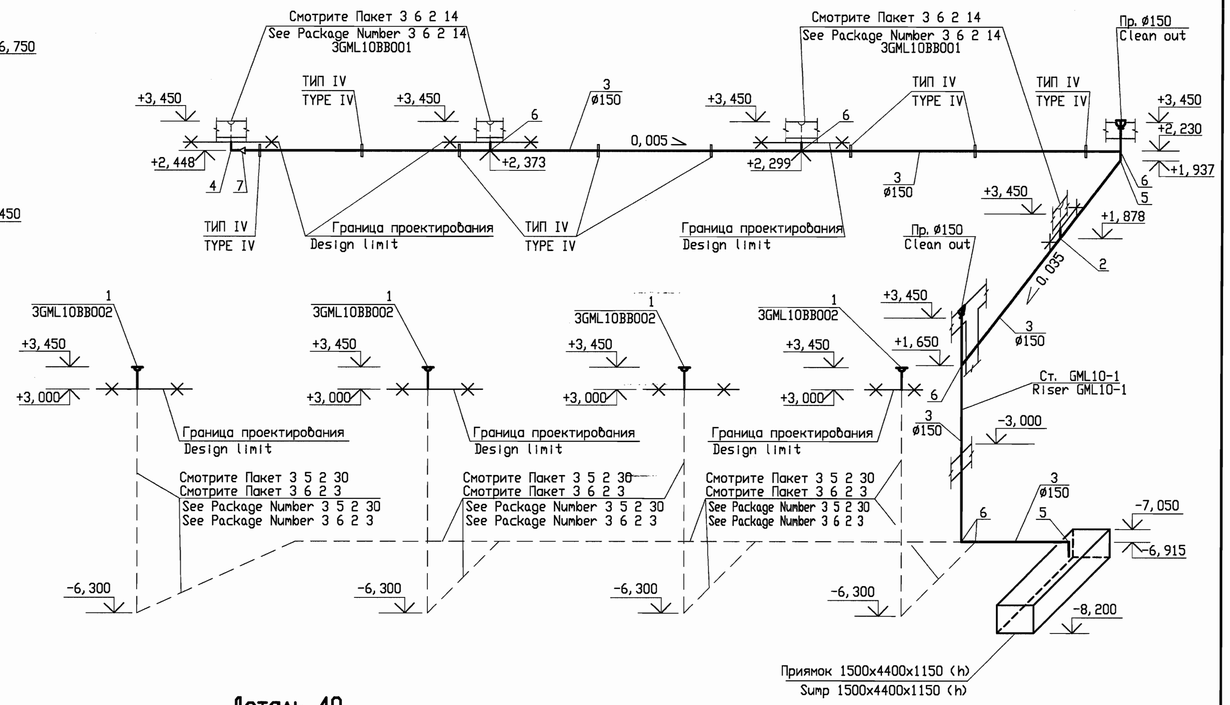

Деталь 40
Detail item 40

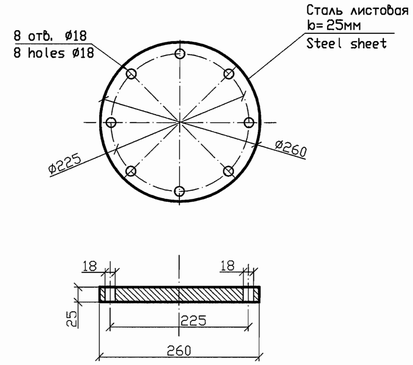

СХЕМА РАСПОЛОЖЕНИЯ
KEY PLAN

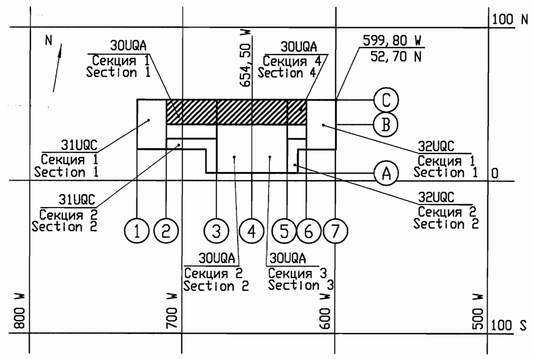

4-4 (2)

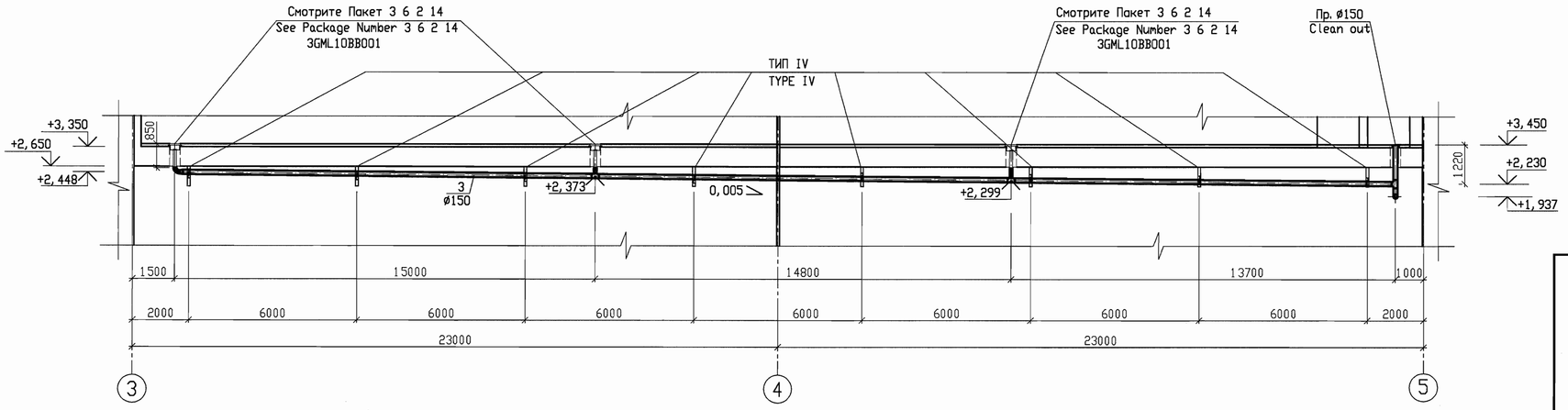

Package Number 3 8 6 75
File: R28 KK34 3OUQA GML WK ПК WD001_003=0

Данный чертеж не подлежит размножению и передаче другим организациям и лицам без согласия ОА "ИНСТИТУТ ГИДРОПРОЕКТ"

This drawing is not to be reproduced or transferred to other organizations or private persons without approval of the JSC "INSTITUTE HYDROPROJECT"

Изм. Rev.	N уч. N pat.	Лист Sheet	N док. Docum N	Подпись Signat.	Дата Date
Утвердил Approved		Dudov			07.18
Н. контр. Inspector		Gorskaya			07.18
Разраб. Designed		Gorskaya			07.18

R28. KK34. 3OUQA. GML. WK. ПК. WD001

АЭС "КУДАНКУЛАМ" БЛОК 3
NPP "KUDANKULAM" UNIT 3

3OUQA
Система сбора и отвода промышленных стоков после автоматического пожаротушения. Дренаж
3OUQA
System of collection and disposal of fire-fighting wastes. Drainage

Стадия Phase	Лист Sheet	Листов Sheets
WD	3	

Разрезы 1-1; 4-4.
Аксонометрическая схема 3GML10
Sections 1-1; 4-4.
Axonometric scheme 3GML10

JSC Institute Hydroproject MOSCOW 2018

формат А1

Inv. Nr 27993 Date 25.07.18	
Orig. arch. Nr.	723725
Date	07.18
Replace arch. Nr.	

Фрагмент плана на отметке -7,050
Fragment of plan at elevation -7,050

Установочный чертеж электронасосных агрегатов GML30
Installation drawing of pumping units

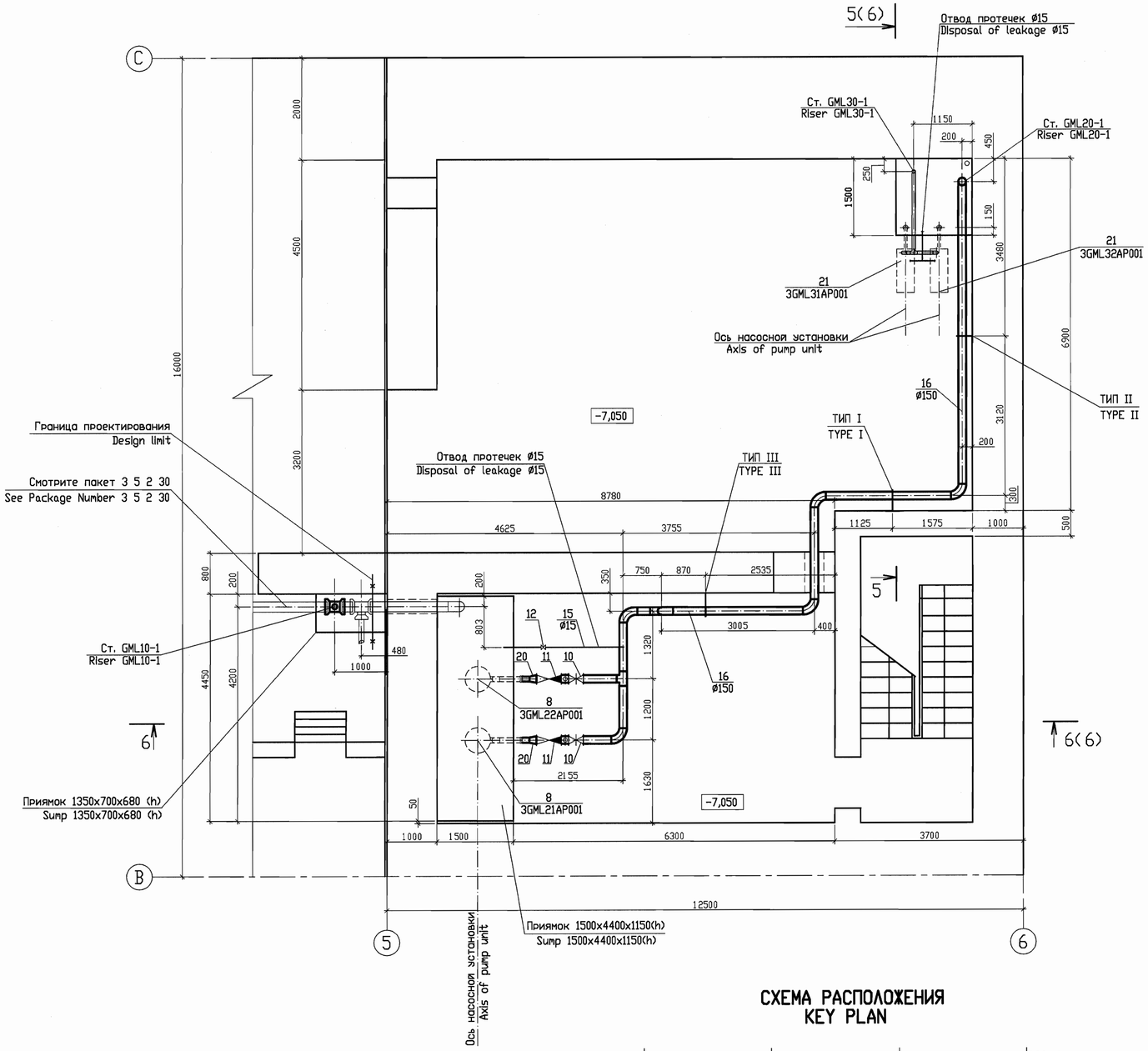

СХЕМА РАСПОЛОЖЕНИЯ
KEY PLAN

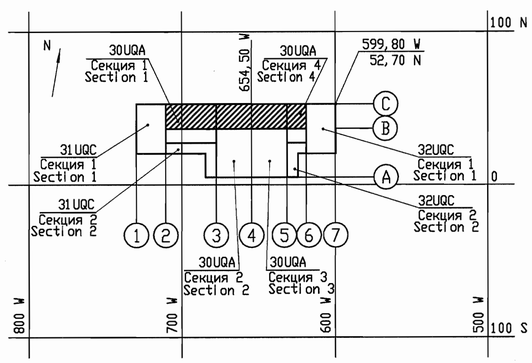

Package Number 3 8 6 75
File: R28 KK34 30UQA GML WK DK WD001_004=0

Данный чертеж не подлежит размножению и передаче другим организациям и лицам без согласия ОАО "ИНСТИТУТ ГИДРОПРОЕКТ"

This drawing is not to be reproduced or transferred to other organizations or private persons without approval of the JSC "INSTITUTE HYDROPROJECT"

Изм. / Rev.	N уч. / N pat.	Лист / Sheet	N док. / Docum N	Подпись / Signat.	Дата / Date
Утвердил / Approved		Dudov			07.18
Н. контр. / Inspector		Gorskaya			07.18
Разраб. / Designed		Gorskaya			07.18

R28. KK34. 30UQA. GML. WK. DK. WD001

АЭС "КУДАНКУЛАМ" БЛОК 3
NPP "KUDANKULAM" UNIT 3

30UQA
Система сбора и отвода промышленных стоков после автоматического пожаротушения. Дренаж
30UQA
System of collection and disposal of fire-fighting wastes. Drainage

Фрагмент плана на отметке -7,050. Установочный чертеж насосного агрегата
Fragment of planat elevation -7,050. Installation drawing of pumping unit

Стадия / Phase	Лист / Sheet	Листов / Sheets
WD	4	

ГИДРОПРОЕКТ HYDROPROJECT
JSC Institute Hydroproject MOSCOW 2018

формат A1

Inv. Nº 27993. Date 25.07.18	
Replace arch. №	
Date	07.18
Orig. arch. №	723725

Разрез 6-6 (1:50)
Section 6-6

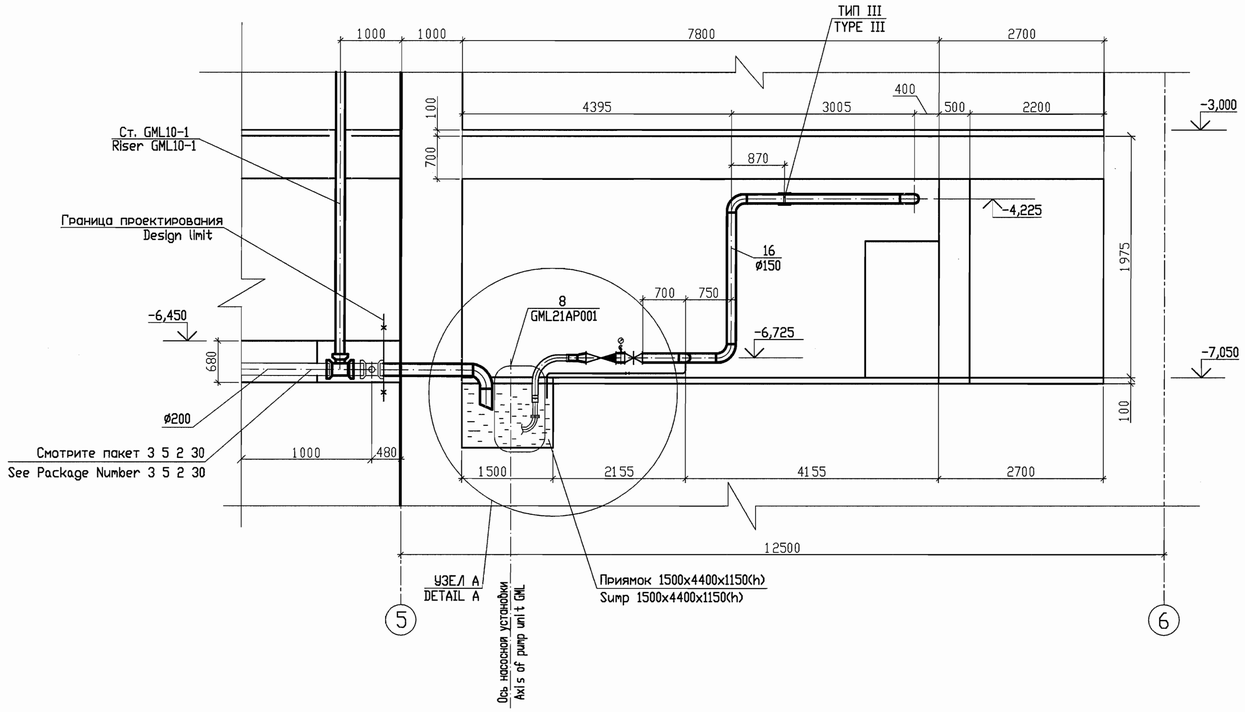

Разрез 7-7(6) (1:25)
Section 7-7(6)

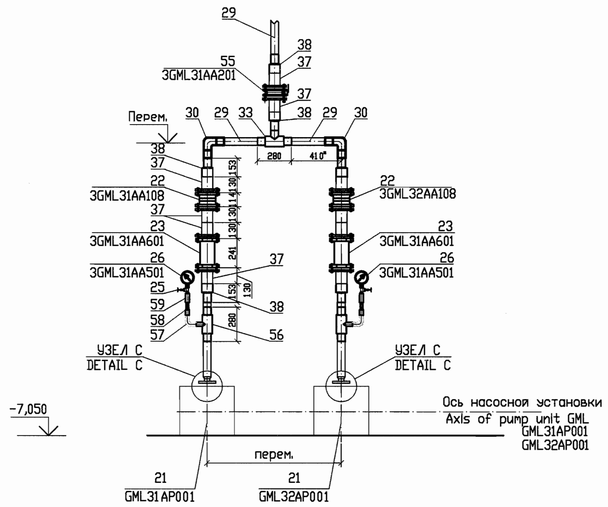

Узел C
Detail C

Узел A (1:25)
Detail A

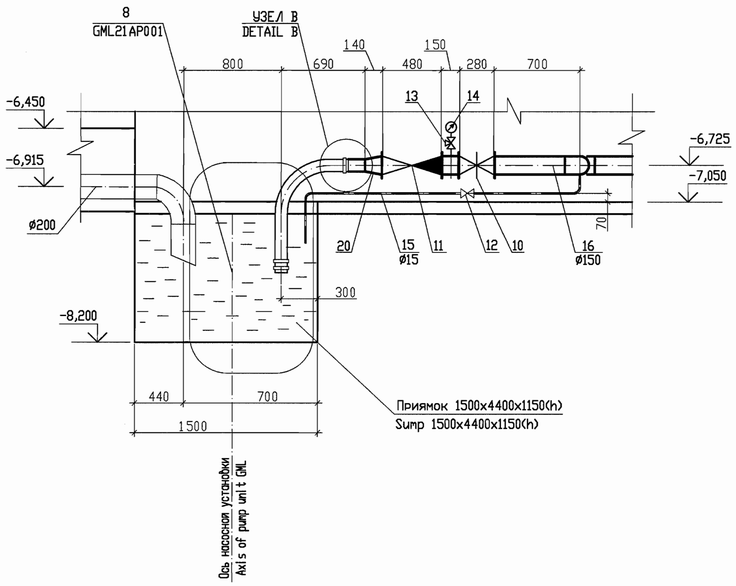

Узел B (1:5)
Detail B

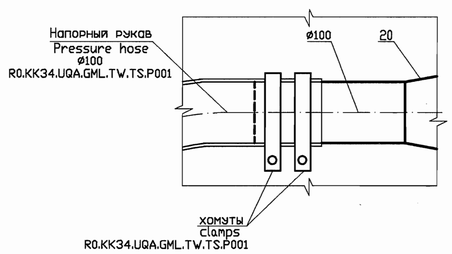

СХЕМА РАСПОЛОЖЕНИЯ
KEY PLAN

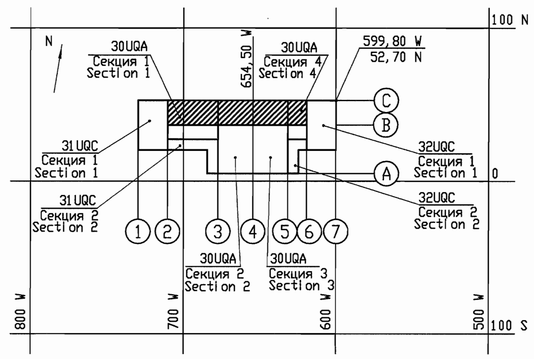

Package Number 3 8 6 75
File: R28 KK34 30UQA GML WK DK WD001_005=D

Данный чертеж не подлежит размножению и передаче другим организациям и лицам без согласия ОАО "ИНСТИТУТ ГИДРОПРОЕКТ"						R28. KK34. 30UQA. GML. WK. DK. WD001			
						АЭС "КУДАНКУЛАМ" БЛОК 3 NPP "KUDANKULAM" UNIT 3			
	Изм.	N уч.	Лист	N док.	Подпись	Дата	30UQA Система сбора и отвода промышленных стоков после автоматического пожаротушения. Дренаж 30UQA System of collection and disposal of fire-fighting wastes. Drainage	Стадия	Лист	Листов
This drawing is not to be reproduced or transferred to other organizations or private persons without approval of the JSC "INSTITUTE HYDROPROJECT"	Rev.	N pat.	Sheet	Docum N	Signat.	Date		Phase	Sheet	Sheets
	Утвердил. Approved			Dudov		07.18		WD	5	
	Н. контр. Inspector			Gorskaya		07.18	Разрез 6-6, 7-7 Узлы A, B, C Sections 6-6, 7-7 Details A, B, C	ГИДРОПРОЕКТ HYDROPROJECT	JSC Institute Hydroproject MOSCOW 2018	
	Разраб. Designed			Gorskaya		07.18				

Inv. N° 27993 Date 25.07.18	
Sign.	
Replace arch. N°	
Date	07.18
Sign.	
Orig. arch. N°	723725

формат A1

Фрагмент плана на отметке -3,000
Fragment of plan at elevation -3,000

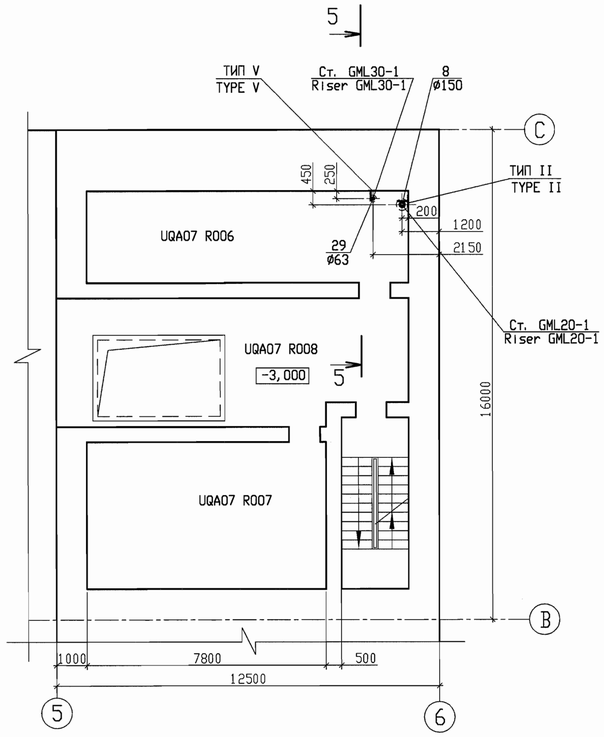

Фрагмент плана на отметке +3,450
Fragment of plan at elevation +3,450

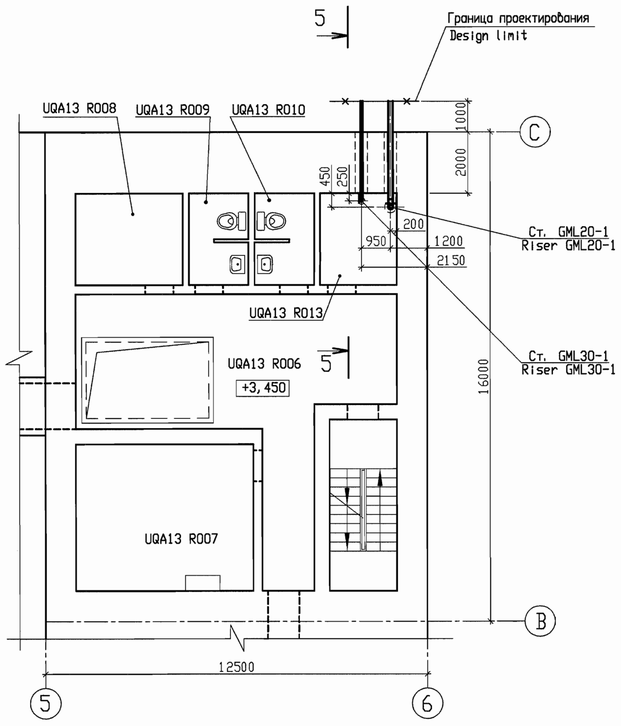

Разрез 5-5
Section 5-5 (1:50)

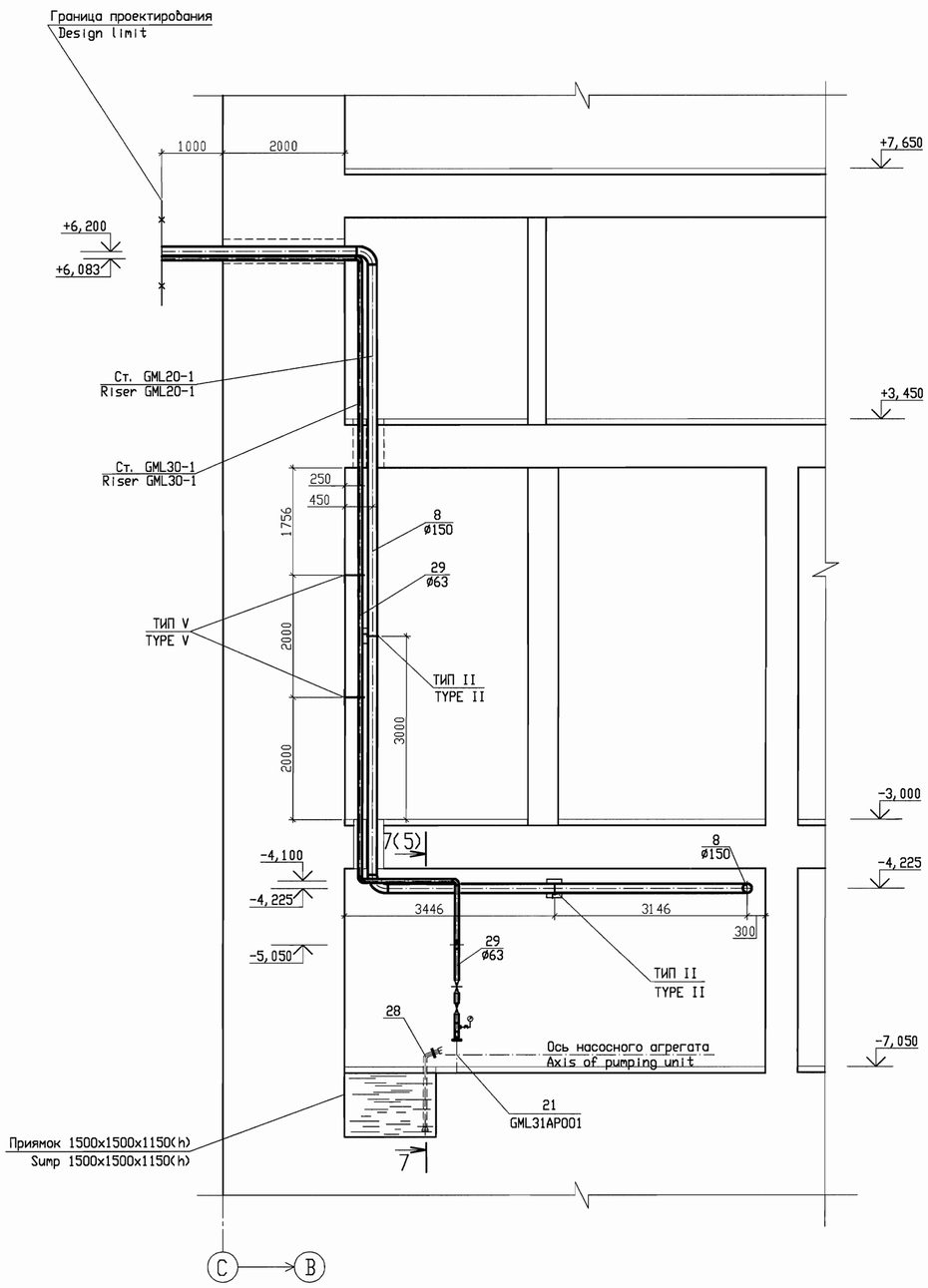

Экспликация помещения
Explication of rooms

Номер помещения Room number	Наименование Description
UQA13	Основная насосная станция Main pump house
UQA13 R006	Рекреация Recreation
UQA13 R007	Комната отдыха персонала Rest room for personnel
UQA13 R008	Пункт управления автоматического пожаротушения Control room of automatic fire-fighting system
UQA13 R009	Санузел W. C.
UQA13 R010	Санузел W. C.
UQA13 R013	Техническое помещение Technical room

СХЕМА РАСПОЛОЖЕНИЯ
KEY PLAN

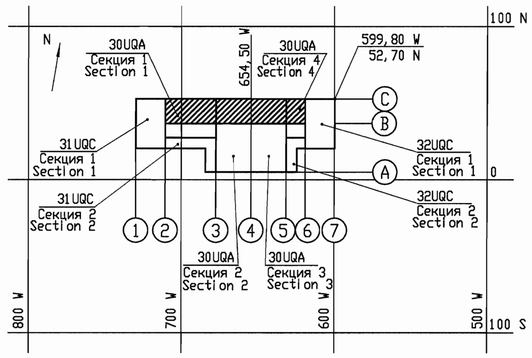

Package Number 3 8 6 75
File: R28 KK34 30UQA GML WK DK WD001_006=D

Данный чертеж не подлежит размножению и передаче другим организациям и лицам без согласия ОАО "ИНСТИТУТ ГИДРОПРОЕКТ"

This drawing is not to be reproduced or transferred to other organizations or private persons without approval of the JSC "INSTITUTE HYDROPROJECT"

Изм.	N уч.	Лист	N док.	Подпись	Дата
Rev.	N pat.	Sheet	Docum N	Signat.	Date
Утвердил Approved		Dudov			04.18
Н. контр. Inspector		Gorskaya			04.18
Разраб. Designed		Gorskaya			04.18

R28. KK34. 30UQA. GML. WK. DK. WD001

АЭС "КУДАНКУЛАМ" БЛОК 3
NPP "KUDANKULAM" UNIT 3

30UQA
Система сбора и отвода промышленных стоков после автоматического пожаротушения. Дренаж
30UQA
System of collection and disposal of fire-fighting wastes. Drainage

Фрагменты планов на отметках -3,000 ; +3,450. Разрез 5-5
Fragment of plans at elevations -3,000 ; +3,450. Section 5-5

Стадия	Лист	Листов
Phase	Sheet	Sheets
WD	6	

ГИДРОПРОЕКТ HYDROPROJECT
JSC Institute Hydroproject MOSCOW 2018

формат A1

Orig. arch. №	Replace arch. №
723725	
Date	
07.18	

Inv.Nr 27993 Date 25.07.18

Аксонометрическая схема 3GML30
Axonometric scheme 3GML30

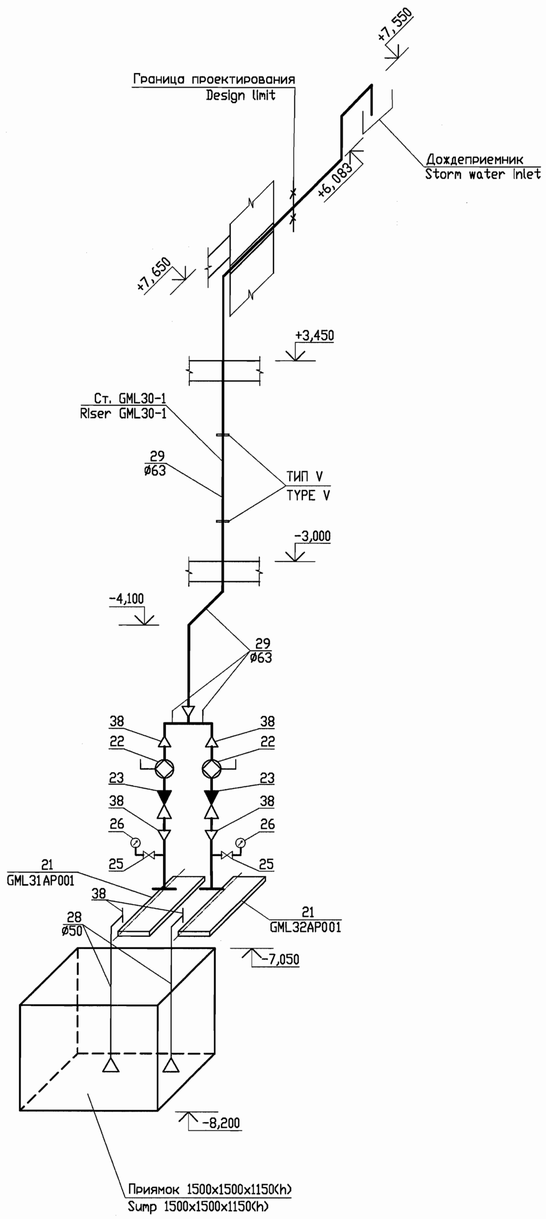

Отвод протечек от 3GML30
Disposal of leakages from 3GML30

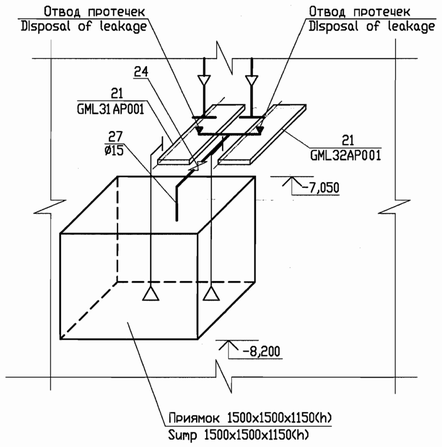

Аксонометрическая схема 3GML20
Axonometric scheme 3GML20

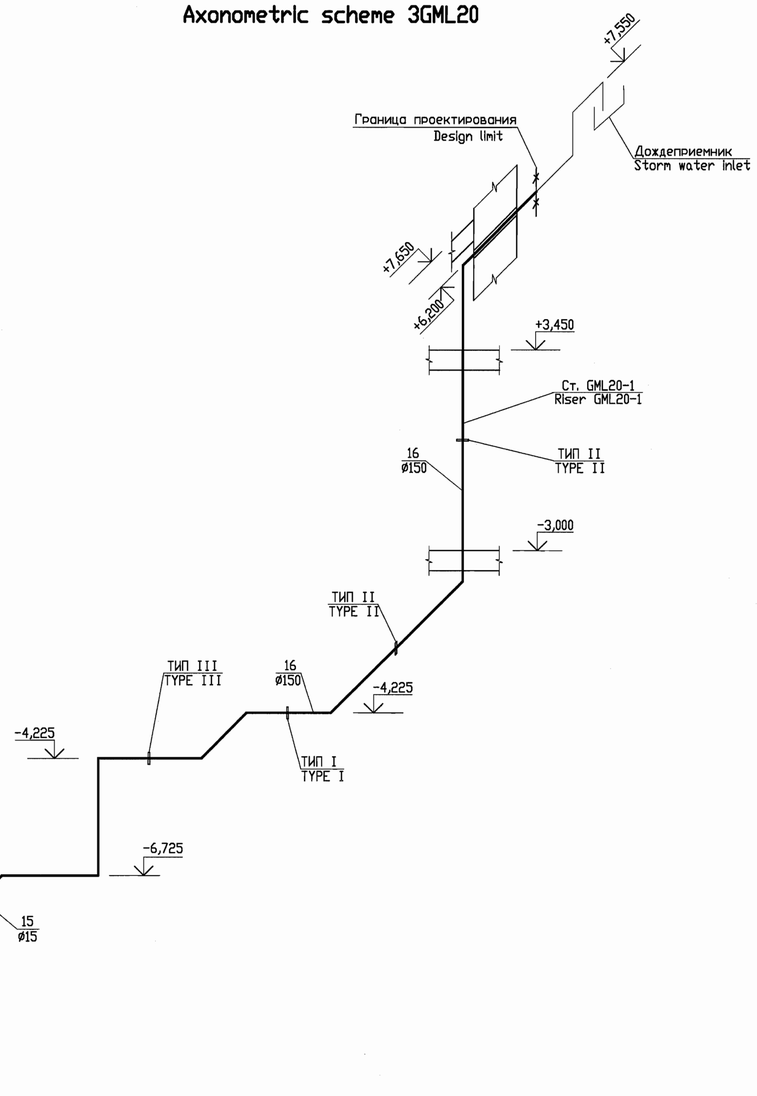

СХЕМА РАСПОЛОЖЕНИЯ
KEY PLAN

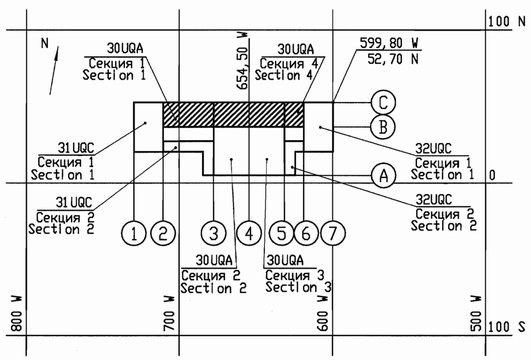

Трубопровод 3GML30 уложить на песчаное основание, монтаж в соответствии с СП 40-102-2000.
Lay the pipeline 3GML on sand bedding, pipe have been erected by SP 40-102-2000.

Package Number 3 8 6 75
File: R28 KK34 30UQA GML WK ПК WD001_007=0

Данный чертеж не подлежит размножению и передаче другим организациям и лицам без согласия ОАО "ИНСТИТУТ ГИДРОПРОЕКТ"

This drawing is not to be reproduced or transferred to other organizations or private persons without approval of the JSC "INSTITUTE HYDROPROJECT"

Изм.	N уч.	Лист	N док.	Подпись	Дата
Rev.	N pat.	Sheet	Посит N	Signat.	Date
Утвердил Approved		Ivanov			07.18
Н. контр. Inspector		Gorskaya			07.18
Разраб. Designed		Gorskaya			07.18

R28. KK34. 30UQA. GML. WK. ПК. WD001

АЭС "КУДАНКУЛАМ" БЛОК 3
NPP "KUDANKULAM" UNIT

30UQA
Система сбора и отвода промышленных стоков после автоматического пожаротушения. Дренаж
30UQA
System of collection and disposal of fire-fighting wastes. Drainage

Стадия	Лист	Листов
Phase	Sheet	Sheets
WD	7	

Аксонометрические схемы 3GML20, 3GML30
Axonometric schemes 3GML20, 3GML30

JSC Institute Hydroproject MOSCOW 2018

формат A1

Inv. Nr 27993 Date 25.07.18	
Replace arch. Nr	
Date	07.18
Orig. arch. Nr	723725

Расположение уровневых датчиков в приямке 3GML20
Location of level switches in sump pit 3GML20
(1:25)

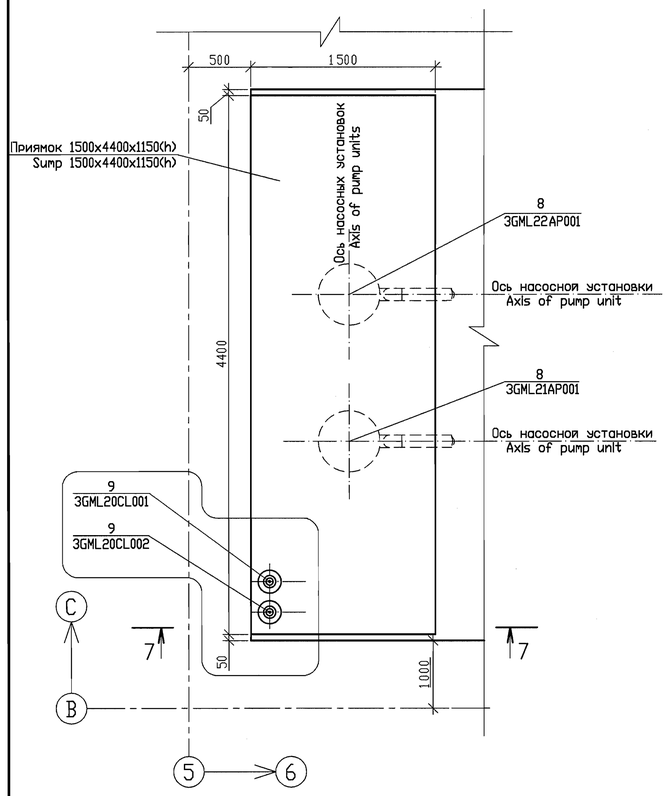

Расположение уровневых датчиков в приямке 3GML30
Location of level switches in sump pit 3GML30
(1:25)

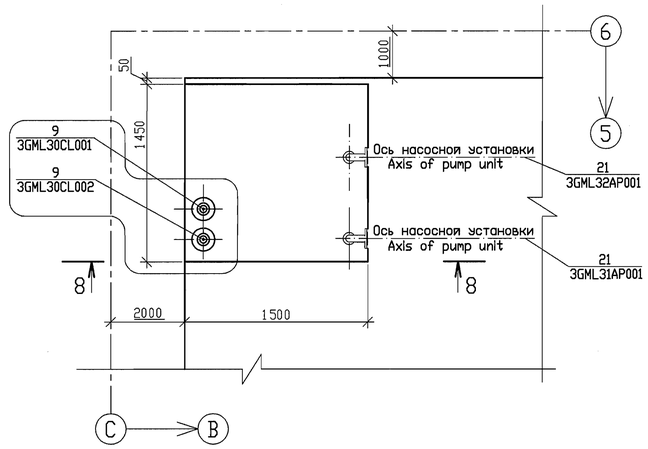

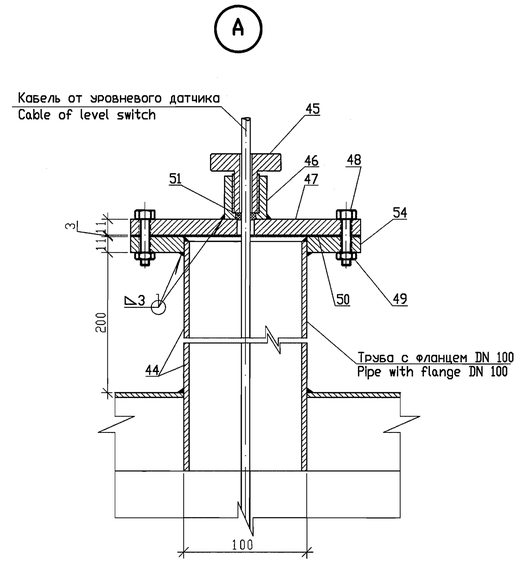

8-8

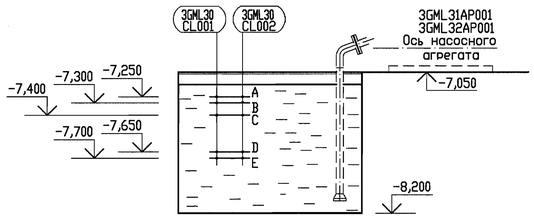

8-8

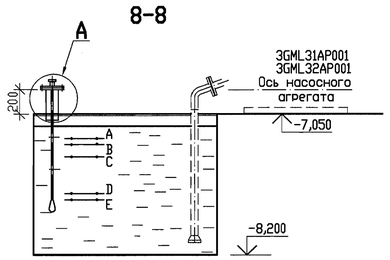

A - Сигнал о высоком уровне -7,250
Signal of high level
B - Включение рабочего насоса -7,300
Start of service pump
C - Включение резервного насоса -7,400
Start of stand-by pump
D - Отключение всех насосов -7,650
Stop of pumps
E - Сигнал о низком уровне -7,700
Signal of low level

Деталь 45
Detail Item 45

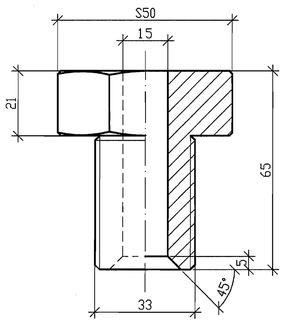

Деталь 47
Detail Item 47

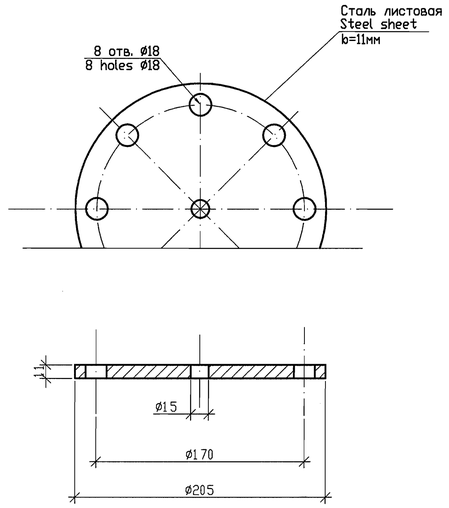

Деталь 46
Detail Item 46

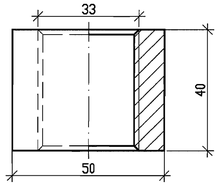

7-7

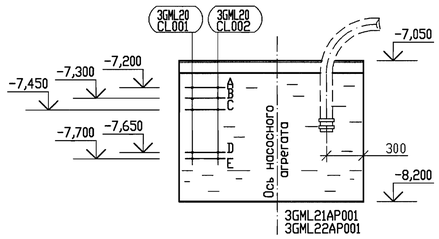

7-7

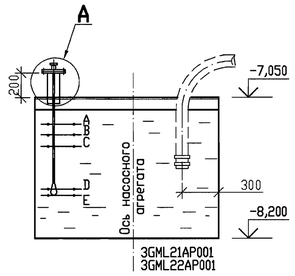

A - Сигнал о высоком уровне -7,200
Signal of high level
B - Включение рабочего насоса -7,300
Start of service pump
C - Включение резервного насоса -7,450
Start of stand-by pump
D - Отключение всех насосов -7,650
Stop of pumps
E - Сигнал о низком уровне -7,700
Signal of low level

СХЕМА РАСПОЛОЖЕНИЯ
KEY PLAN

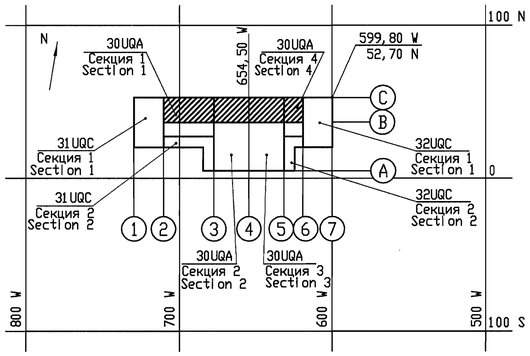

Package Number 3 8 6 75
File: R28 KK34 30UQA GML WK DK WD001_008=D

Данный чертеж не подлежит размножению и передаче другим организациям и лицам без согласия ОА"ИНСТИТУТ ГИДРОПРОЕКТ"

This drawing is not to be reproduced or transferred to other organizations or private persons without approval of the JSC "INSTITUTE HYDROPROJECT"

Изм. Rev.	N уч. N pat.	Лист Sheet	N док. Docum N	Подпись Signat.	Дата Date
Утвердил. Approved		Dudov			07.18
Н. контр. Inspector		Gorskaya			07.18
Разраб. Designed		Gorskaya			07.18

R28. KK34. 30UQA. GML. WK. DK. WD001

АЭС "КУДАНКУЛАМ" БЛОК 3
NPP "KUDANKULAM" UNIT 3

30UQA
Система сбора и отвода промышленных стоков после автоматического пожаротушения. Дренаж
30UQA
System of collection and disposal of fire-fighting wastes. Drainage

Установка уровневых датчиков в приямках
Installation of level switches in sump pit

Стадия Phase	Лист Sheet	Листов Sheets
WD	8	

JSC Institute Hydroproject MOSCOW 2018

Replace arch. №
Date 07.18
Inv. Nr. 27993 Date 25.07.18
Orig. arch. №. 723725

формат A1

Тип IV
Type IV

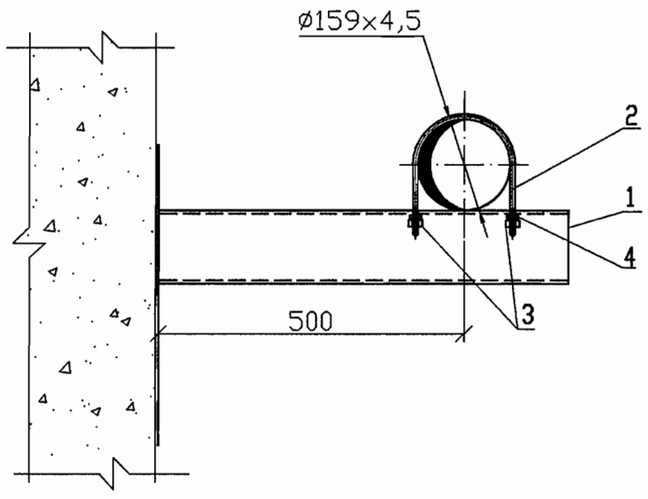

Ведомость деталей
List of parts

Таблица 1
Table 1

Поз. Item	Эскиз Sketch
1	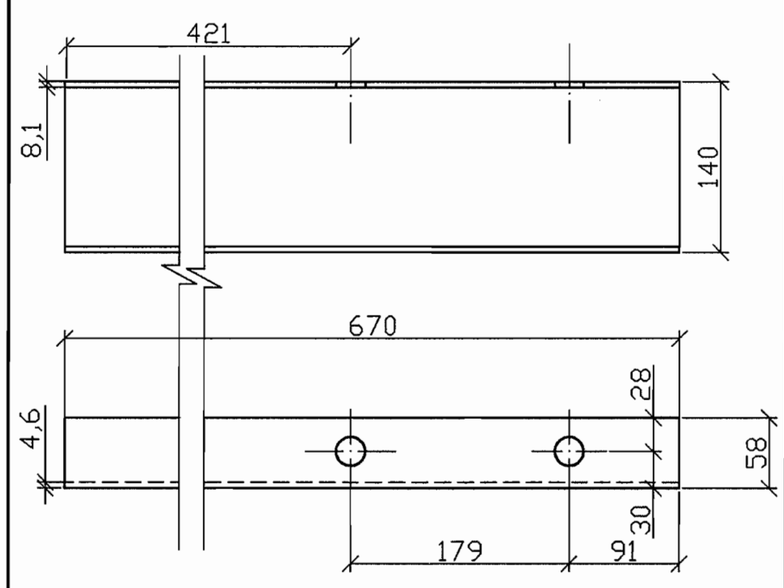
2	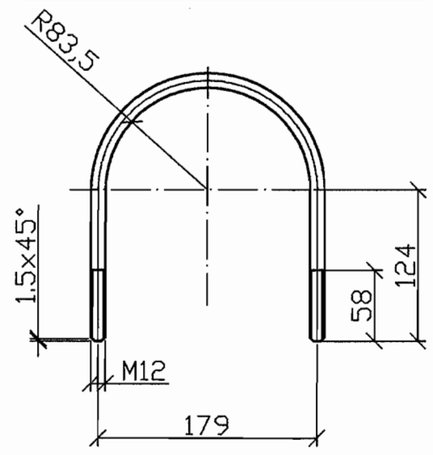 L разв.=510мм L development length=510mm

Спецификация
Specification

Таблица 2
Table 2

Поз. Items	Обозначение Designation	Наименование Name	Кол. Q-ty	Масса ед., кг Weight per unit, kg	Примеч. Note
		Тип IV Type IV	8	8,662	69,30
1	Швеллер 143 ГОСТ 8240-97 / Ст3 ГОСТ 535-58 Channel	Швеллер стальной горячекатанный № 143 высокой прочности прокатки (А), марки Ст3сп, категории 2, L=0,670 м, шт. Steel hot-rolled channel, № 143 of high strength(A), Steel Ст3сп, category 2, L=0,670 m, pcs.	1	8,14	8,14
2	Круг 12-В-II / Ст5 псI-II Round	Прокат горячекатанный круглый диаметром 12 мм обычной точности прокатки (В), II класса кривизны, марки Ст5пс, категории 1, группы II, L=0,510 м, шт. Hot-rolled round steel section, 12 mm in dia, of common precision (B), class of curvature II, Steel Ст5пс, category I, group II, L=0,510 m, pcs.	1	0,48	0,48
3	Гайка M12-6H.5(S18) Nut M12-6H.5(S18)	Шестигранные гайки класса точности В с диаметром резьбы 12 мм, с размером "под ключ" 18 мм, с крупным шагом резьбы с полем допуска 6Н, класса прочности 5, без покрытия, шт. Hexagon nuts with class of precision B, thread diameter 12 mm, for 18 mm range with large pitch of thread, accuracy allowance 6H, strength class 5 without coating, pcs.	2	0,016	0,032
4	Шайба 12 Washer 12	Шайба стальная для болта диаметром резьбы 12 мм, шт. Steel washer for bolt with thread diameter 12 mm, pcs.	2	0,005	0,01

СХЕМА РАСПОЛОЖЕНИЯ
KEY PLAN

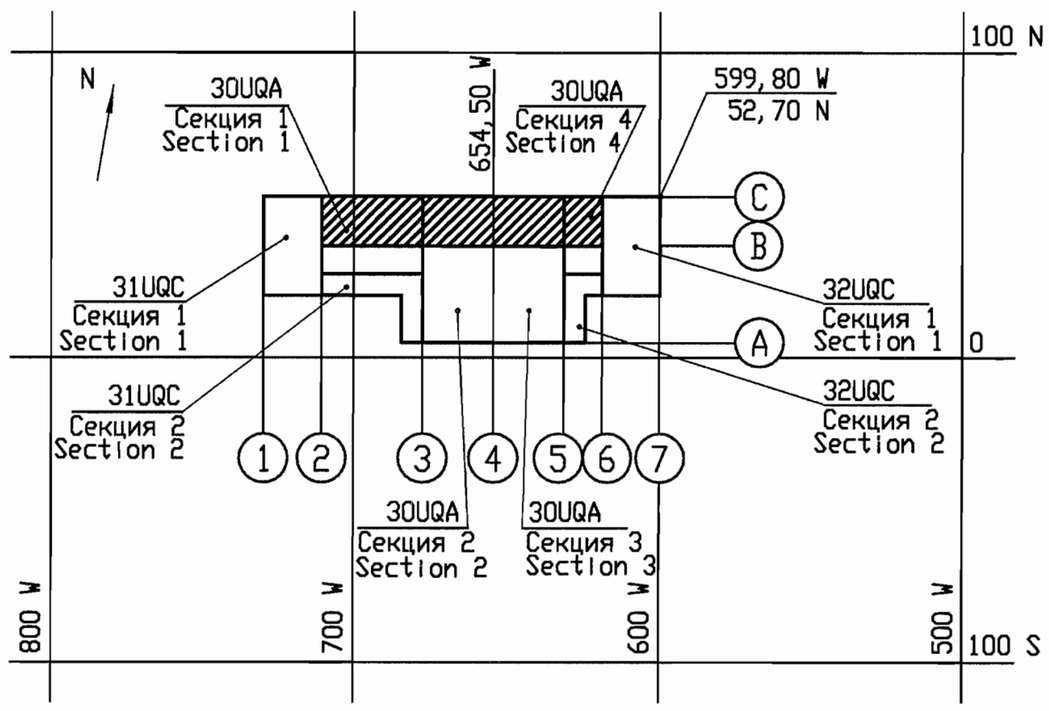

Package Number 3 8 6 75
File: R28 KK34 30UQA GML WK ПК WD001_009=0

Данный чертеж не подлежит размножению и передаче другим организациям и лицам без согласия ОА"ИНСТИТУТ ГИДРОПРОЕКТ"

This drawing is not to be reproduced or transferred to other organizations or private persons without approval of the JSC "INSTITUTE HYDROPROJECT"

Изм. Rev.	N уч. N pat.	Лист Sheet	N док. Docum N	Подпись Signat.	Дата Date
Утвердил Approved		Dudov			07.18
Н. контр. Inspector		Gorskaya			07.18
Разраб. Designed		Gorskaya			07.18

R28. KK34. 30UQA. GML. WK. ПК. WD001

АЭС "КУДАНКУЛАМ" БЛОК 3
NPP "KUDANKULAM" UNIT 3

30UQA
Система сбора и отвода промышленных стоков после автоматического пожаротушения. Дренаж 30UQA
System of collection and disposal of fire-fighting wastes. Drainage

Стадия Phase	Лист Sheet	Листов Sheets
WD	9	

Крепления трубопроводов 3GML10. Тип IV. Спецификация
Fixing of pipelines 3GML10. Type IV. Specification

ГИДРОПРОЕКТ HYDROPROJECT
JSC Institute Hydroproject MOSCOW 2018

формат А2

Replace arch. Nr.
Date 07.18
Orig. arch. Nr. 723725
Inv.Nr 27993 Date 25.07.18

Тип I
Type I

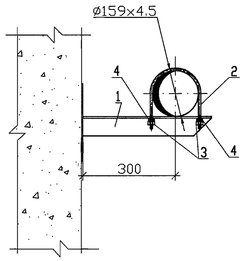

Тип II
Type II

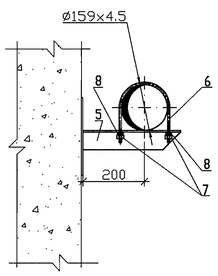

Тип III
Type III

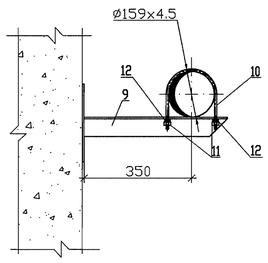

Ведомость деталей
List of parts

Таблица 1
Table 1

Поз. Item	Эскиз Sketch
1	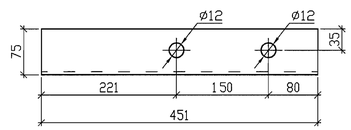
2	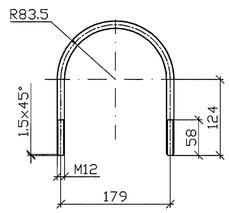 L разв.=510мм L development length=510mm
5	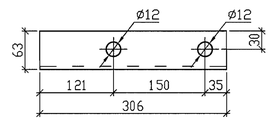
6	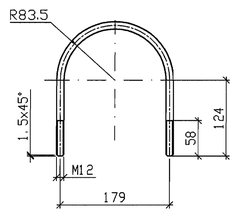 L разв.=510мм L development length=510mm
9	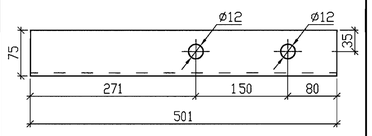
10	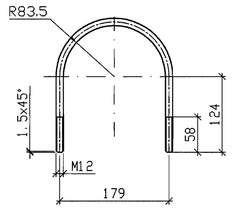 L разв.=510мм L development length=510mm

Спецификация
Specification

Таблица 2
Table 2

Поз. Items	Обозначение Designation	Наименование Name	Кол. Q-ty	Масса ед., кг. Weight per unit, kg	Примеч. Note
		Тип I Type I	1	2,922	2,922
1	Уголок $\frac{75x75x5-A}{Ст3\ пс2}$ Angle	Уголок стальной горячекатанный равнополочный размером 75x75x5мм высокой прочности прокатки (А), марки Ст3сп, категории 2, L=0,451 м, шт. Steel hot-rolled equal angle, 75x75x5mm in size, of high strength(A), Steel Ст3сп, category 2, L=0,451 m, pcs.	1	2,40	2,40
2	Круг $\frac{12-B-II}{Ст5\ пс1-II}$ Round	Прокат горячекатанный круглый диаметром 12 мм обычной точности прокатки (В), II класса кривизны, марки Ст5пс, категории 1, группы II, L=0,510 м, шт. Hot-rolled round steel section, 12 mm in dia, of common precision (B), class of curvature II, Steel Ст5пс, category I, group II, L=0,510 m, pcs.	1	0,48	0,48
3	Гайка M12-6H.5(S18) Nut M12-6H.5(S18)	Шестигранные гайки класса точности В с диаметром резьбы 12 мм, с размером "под ключ" 18 мм, с крупным шагом резьбы с полем допуска 6Н, класса прочности 5, без покрытия, шт. Hexagon nuts with class of precision B, thread diameter 12 mm, for 18 mm range with large pitch of thread, accuracy allowance 6H, strength class 5 without coating, pcs.	2	0,016	0,032
4	Шайба 12 Washer 12	Шайба стальная для болта диаметром резьбы 12 мм, шт. Steel washer for bolt with thread diameter 12 mm, pcs.	2	0,005	0,01
		Тип II Type II	2	2,682	5,364
5	Уголок $\frac{75x75x5-A}{Ст3\ пс2}$ Angle	Уголок стальной горячекатанный равнополочный размером 75x75x5мм высокой прочности прокатки (А), марки Ст3сп, категории 2, L=0,306 м, шт. Steel hot-rolled equal angle, 75x75x5mm in size, of high strength(A), Steel Ст3сп, category 2, L=0,306 m, pcs.	1	2,16	2,16
6	Круг $\frac{12-B-II}{Ст5\ пс1-II}$ Round	Прокат горячекатанный круглый диаметром 12 мм обычной точности прокатки (В), II класса кривизны, марки Ст5пс, категории 1, группы II, L=0,510 м, шт. Hot-rolled round steel section, 12 mm in dia, of common precision (B), class of curvature II, Steel Ст5пс, category I, group II, L=0,510 m, pcs.	1	0,48	0,48
7	Гайка M12-6H.5(S18) Nut M12-6H.5(S18)	Шестигранные гайки класса точности В с диаметром резьбы 12 мм, с размером "под ключ" 18 мм, с крупным шагом резьбы с полем допуска 6Н, класса прочности 5, без покрытия, шт. Hexagon nuts with class of precision B, thread diameter 12 mm, for 18 mm range with large pitch of thread, accuracy allowance 6H, strength class 5 without coating, pcs.	2	0,016	0,032
8	Шайба 12 Washer 12	Шайба стальная для болта диаметром резьбы 12 мм, шт. Steel washer for bolt with thread diameter 12 mm, pcs.	2	0,005	0,01

Таблица 2(продолжение)
Table 2(continued)

Поз. Items	Обозначение Designation	Наименование Name	Кол. Q-ty	Масса ед., кг. Weight per unit, kg	Примеч. Note
		Тип III Type III	1	2,922	2,922
9	Уголок $\frac{75x75x5-A}{Ст3\ пс2}$ Angle	Уголок стальной горячекатанный равнополочный размером 75x75x5мм высокой прочности прокатки (А), марки Ст3сп, категории 2, L=0,501 м, шт. Steel hot-rolled equal angle, 75x75x5mm in size, of high strength(A), Steel Ст3сп, category 2, L=0,501 m, pcs.	1	2,40	2,40
10	Круг $\frac{12-B-II}{Ст5\ пс1-II}$ Round	Прокат горячекатанный круглый диаметром 12 мм обычной точности прокатки (В), II класса кривизны, марки Ст5пс, категории 1, группы II, L=0,510 м, шт. Hot-rolled round steel section, 12 mm in dia, of common precision (B), class of curvature II, Steel Ст5пс, category I, group II, L=0,510 m, pcs.	1	0,48	0,48
11	Гайка M12-6H.5(S18) Nut M12-6H.5(S18)	Шестигранные гайки класса точности В с диаметром резьбы 12 мм, с размером "под ключ" 18 мм, с крупным шагом резьбы с полем допуска 6Н, класса прочности 5, без покрытия, шт. Hexagon nuts with class of precision B, thread diameter 12 mm, for 18 mm range with large pitch of thread, accuracy allowance 6H, strength class 5 without coating, pcs.	2	0,016	0,032
12	Шайба 12 Washer 12	Шайба стальная для болта диаметром резьбы 12 мм, шт. Steel washer for bolt with thread diameter 12 mm, pcs.	2	0,005	0,01

СХЕМА РАСПОЛОЖЕНИЯ
KEY PLAN

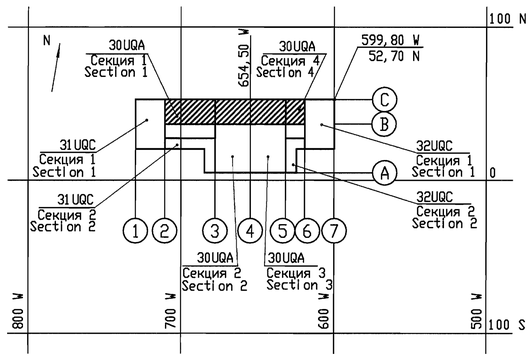

Package Number 3 8 6 75
File: R28 KK34 30UQA GML WK DK WD001_D1D=0

Данный чертеж не подлежит размножению и передаче другим организациям и лицам без согласия ОА "ИНСТИТУТ ГИДРОПРОЕКТ"

This drawing is not to be reproduced or transferred to other organizations or private persons without approval of the JSC "INSTITUTE HYDROPROJECT"

Изм. Rev.	N уч. N pat.	Лист Sheet	N док. Docum N	Подпись Signat.	Дата Date
Утвердил Approved		Dudov			07.18
Н. контр. Inspector		Gorskaya			07.18
Разраб. Designed		Gorskaya			07.18

R28. KK34. 30UQA. GML. WK. DK. WD001

АЭС "КУДАНКУЛАМ" БЛОК 3
NPP "KUDANKULAM" UNIT 3

30UQA
Система сбора и отвода промышленных стоков после автоматического пожаротушения. Дренаж
30UQA
System of collection and disposal of fire-fighting wastes. Drainage

Крепления трубопроводов 3GML20. Тип I...Тип III. Спецификация
Fixing of pipelines 3GML20. Type I...Type III. Specification

Стадия Phase	Лист Sheet	Листов Sheets
WD	10	

ГИДРОПРОЕКТ HYDROPROJECT
JSC Institute Hydroproject MOSCOW 2018

формат А1

Inv.Nr 27993 Date 25.07.18

Replace arch. Nr	Date	Orig. arch. Nr.
	07.18	723725

Тип V
Type V

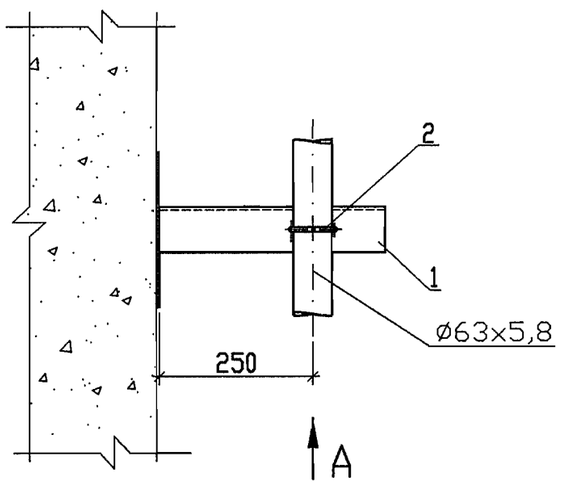

A

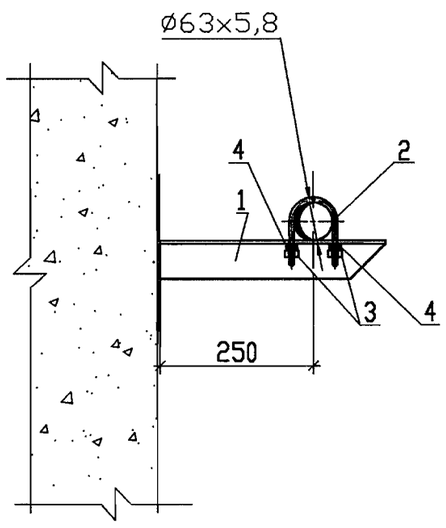

Спецификация
Specification

Таблица 2
Table 2

Поз. Items	Обозначение Designation	Наименование Name	Кол. Q-ty	Масса ед. кг Weight per unit, kg	Примеч. Note
		Тип V Type V	2	2,594	5,2
1	Уголок Angle 75x75x5-A / Ст3 пс2	Уголок стальной горячекатанный равнополочный размером 75x75x5мм высокой прочности прокатки (А), марки Ст3сп, категории 2, L=0,42 м, шт. Steel hot-rolled equal angle, 75x75x5mm in size, of high strength(A), Steel Ст3сп, category 2, L=0,42 m, pcs.	1	2,40	2,40
2	Круг Round 12-B-II / Ст5 псI-II	Прокат горячекатанный круглый диаметром 12 мм обычной точности прокатки (В), II класса кривизны, марки Ст5пс, категории 1, группы II, L=0,300 м, шт. Hot-rolled round steel section, 12 mm in dia, of common precision (B), class of curvature II, Steel Ст5пс, category I, group II, L=0,300 m, pcs.	1	0,18	0,18
3	Гайка M10-6H.5(S16) Nut M10-6H.5(S16)	Шестигранные гайки класса точности В с диаметром резьбы 10 мм, с размером "под ключ" 16 мм, с крупным шагом резьбы с полем допуска 6Н, класса прочности 5, без покрытия, шт. Hexagon nuts with class of precision B, thread diameter 10 mm, for 16 mm range with large pitch of thread, accuracy allowance 6H, strength class 5 without coating, pcs.	2	0,010	0,02
4	Шайба 10 Washer 10	Шайба стальная для болта диаметром резьбы 10 мм, шт. Steel washer for bolt with thread diameter 10 mm, pcs.	2	0,004	0,008

Ведомость деталей
List of parts

Таблица 1
Table 1

Поз. Item	Эскиз Sketch
1	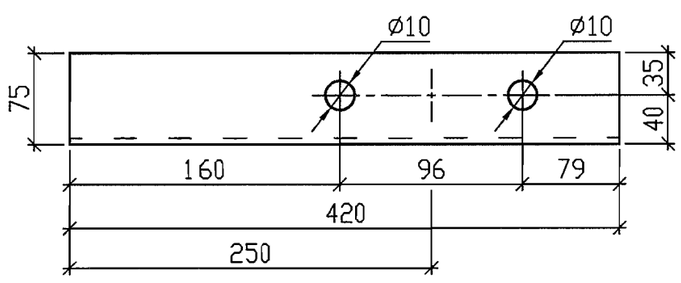
2	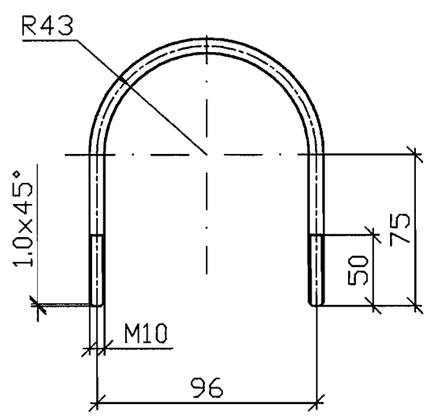 L разв.=300мм L development length=300mm

СХЕМА РАСПОЛОЖЕНИЯ
KEY PLAN

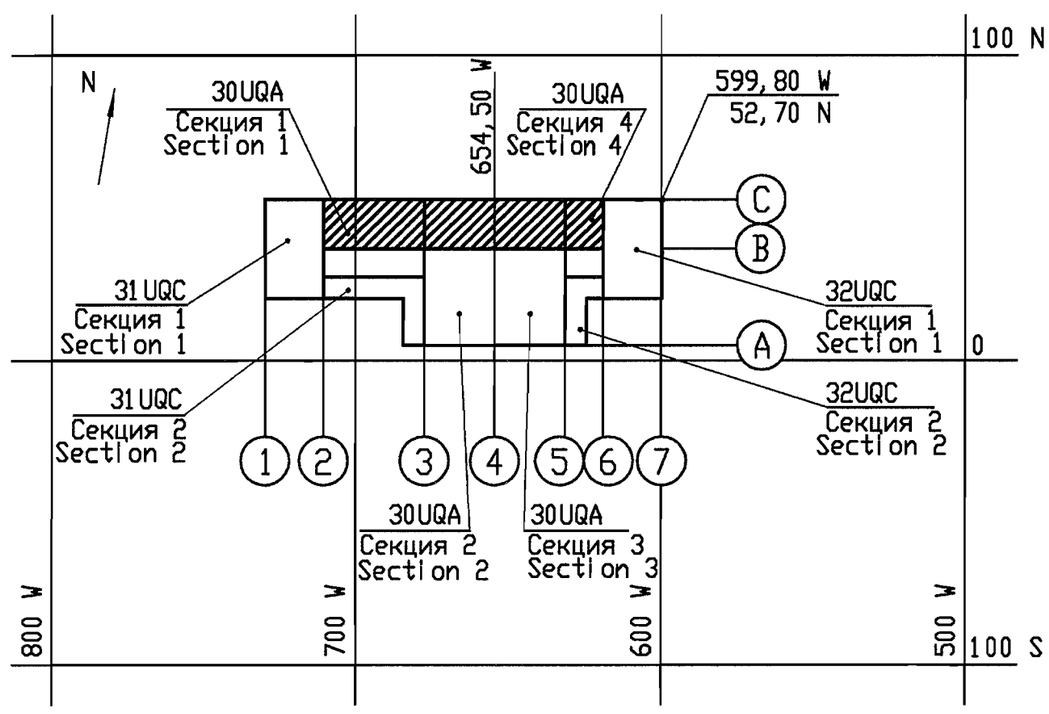

Package Number 3 8 6 75
File: R28 KK34 30UQA GML WK ПК WD001_011=0

Данный чертеж не подлежит размножению и передаче другим организациям и лицам без согласия ОА"ИНСТИТУТ ГИДРОПРОЕКТ"

This drawing is not to be reproduced or transferred to other organizations or private persons without approval of the JSC "INSTITUTE HYDROPROJECT"

Изм. Rev.	N уч. N pat.	Лист Sheet	N док. Docum N	Подпись Signat.	Дата Date
Утвердил Approved		Dudov			07.18
Н. контр. Inspector		Gorskaya			07.18
Разраб. Designed		Gorskaya			07.18

R28. KK34. 30UQA. GML. WK. ПК. WD001

АЭС "КУДАНКУЛАМ" БЛОК 3
NPP "KUDANKULAM" UNIT 3

30UQA
Система сбора и отвода промышленных стоков после автоматического пожаротушения. Дренаж
30UQA
System of collection and disposal of fire-fighting wastes. Drainage

Стадия	Лист	Листов
Phase	Sheet	Sheets
WD	11	

Крепления трубопроводов 3GML30. Тип V. Спецификация
Fixing of pipelines 3GML30. Type V. Specification

ГИДРОПРОЕКТ HYDROPROJECT
JSC Institute Hydroproject
MOSCOW 2018

формат А2

Replace arch. Nr
Date 07.18
Orig. arch. Nr. 723725
Inv.Nr 27993 Date 25.07.18

Спецификация 3GML10
Specification 3GML10

Таблица 1
Table 1

Поз. Items	Обозначение Designation	Наименование Name	Кол. Q-ty	Масса ед., кг Weight per unit, kg	Масса общая, кг Weight total, kg
1	ГОСТ 27772-88 GOST TTC R01.KK34.0.0.KM.TS.P003	DN100-1 Трап стальной, шт. Cast iron trap, psc. 3GML10BB002	4	28,9	115,6
2	Dу=150x100mm ГОСТ 17376-2001 GOST	Тройник 159x4,5 - 108x4, шт. T-piece, pcs.	1	4,8	4,8
3	Dу=150mm ГОСТ 10704 91 GOST	Труба стальная электросварная D159x4,5 категория качества А, м. Electrically welded steel pipe D159x4,5 Quality A category, m.	63	17,8	1121,4
4	Dу=100mm ГОСТ 17375-2001 GOST	Отвод 90-108x4-09Г2С, шт. Branch pipe, pcs.	1	2,5	2,5
5	Dу=150mm ГОСТ 17375-2001 GOST	Отвод 90-159x5-09Г2С, шт. Branch pipe, pcs.	2	6,1	12,2
6	Dу=150mm ГОСТ 17376-2001 GOST	Тройник 159x4,5, шт. T-piece, pcs.	5	16	80
7	Dу=150x100mm ГОСТ 17378-2001 GOST	Переход К-159x4,5-108x4, шт. Reducer, pcs.	1	3,9	3,9

Спецификация 3GML20
Specification 3GML20

Таблица 2
Table 2

Поз. Items	Обозначение Designation	Наименование Name	Кол. Q-ty	Масса ед., кг Weight per unit, kg	Масса общая, кг Weight total, kg
8	3GML21AP001 3GML22AP001 R01.KK34.UQA.GML.TW.TS.P001	Переносной центробежный погружной электронасос, производительностью 100 куб. м/ч, напором 25 метров с эл.дв.мощ. 15 кВт, к-т Portable centrifugal submersible electrical pump, 100 cu.m/h capacity, 25 m head with 15 kW el. motor, set.	2		
9*		Датчик уровня тип , шт. Level switch Type , pcs.	4	—	—
10	DN=150mm Pу=1,6 MPa CN-01-16-150Ф-1-AM 3GML21AA001 3GML22AA001 TTC R01.KK34.0.0.TW.TS.P001	Задвижка стальная сварная клиновая с выдвижным шпинделем, фланцевая, комплектно с ответными фланцами, крепежом и прокладками в тропическом исполнении, шт. Steel welded wedged gate valve with telescopic spindle, flange connected, complete with companion flanges, fastenings and gaskets of tropical make, pcs.	2	119	238
11	ASME B16.34-2004 ASME B16.5-2004 Класс 150 3GML21AA601 3GML22AA601	Поворотный обратный клапан фланцевый DN=150mm Pу=1,6 MPa комплектно с ответными фланцами, шт.	2	32	64
12	ASME B16.34-2004 3GML22AA002	Игольчатый вентиль DN=15mm Pу=1,6 MPa	1	0,7	0,7
13	11Б38бк (11Б18бк) Pу=1,6 MPa DN=15mm	Кран трехходовой натяжной муфтовый с фланцем для контрольного манометра, шт. Three way cock, couple joined non-gland flanged for test pressure gauge, pcs.	2	0,4	0,8
14	P=0,4 MPa 3GML21CP001 3GML22CP001 TTC R01.KK34.0.0.TW.TS.P004	Манометр показывающий на морской воде, к-т. Pressure gauge for sea water, set.	2	0,85	1,7
15	Dу=15mm ГОСТ 3262-75 GOST	Труба стальная водогазопроводная, м Water-gas steel pipe, m	3	1,10	3,3
16	Dу=150mm ГОСТ 10704 91 GOST	Труба стальная электросварная D159x4,5 категория качества А, м. Electrically welded steel pipe D159x4,5 Quality A category, m.	37	17,8	658,6

Таблица 2 (продолжение)
Table 2 (continued)

Поз. Items	Обозначение Designation	Наименование Name	Кол. Q-ty	Масса ед., кг Weight per unit, kg	Масса общая, кг Weight total, kg
17	Dу=150mm ГОСТ 17375-2001 GOST	Отвод 90-159x5-09Г2С, шт. Branch pipe, pcs.	9	6,5	58,5
18	Dу=15 mm ГОСТ 8946-75 GOST	Угольник из ковкого чугуна с цилиндрической резьбой, шт. Angle of maleable cast iron with cylindrical thread, pcs.	2	0,094	0,188
19	Dу=150mm ГОСТ 17376-2001 GOST	Тройник 159x4,5, шт. T-piece, pcs.	1	9,4	9,4
20	Dу=150x100mm ГОСТ 17378-2001 GOST	Переход К-159x4,5-108x4, шт. Reducer, pcs.	2	3,9	7,8

Спецификация 3GML30
Specification 3GML30

Таблица 3
Table 3

Поз. Items	Обозначение Designation	Наименование Name	Кол. Q-ty	Масса ед., кг Weight per unit, kg	Масса общая, кг Weight total, kg
21	3GML31AP001 3GML32AP001 R01.KK34.UQA.GML.TW.TS.P002	Центробежный самовсасывающий насос с электродвигателем N=1,5 кВт n=3000 об/мин., напряжение 380 В (по заказу потребителя 220В) частота тока-50 Гц., к-т. Centrifugal self-priming pump ЦНС-6,3/20 with electric motor of tropical make N=1,5 kW, n=3000 rpm, 380 V, (220V on request of the user), 50 Hz, set.	2		
22	R28.KK.UQA.PCB.TW.TT.WD001 ТУ 3741-056-34390194--2004 3GML31AA108 3GML32AA108	Затвор дисковый, шт Butterfly valve, pcs ЦКБ П99199-080 Pу=1,0 MPa DN=80mm	2	—	—
23	ASME B16.34-2004 Pу=1,0 MPa DN=80mm 3GML31AA601 3GML32AA601	Поворотный обратный клапан, шт с ответными фланцами согласно B16.5, Класс 150 Swing check valve, pcs with companion flanges as per B16.5, Class 150	2	—	—
24	ASME B16.34-2004 3GML31AA002 TTC I02.KK34.0.0.TH.TS.PR00X	Игольчатый вентиль DN=15mm Needle valve Pу=1,6 MPa	1	0,7	0,7
25	Pу=1,6 MPa DN=15mm 3GML31AA301 3GML32AA301	Шаровой кран с фланцем для контрольного манометра, шт Ball valve with flange for test pressure gauge, pcs	2	0,4	0,8
26	P=0,6 MPa 3GML31CP501 3GML32CP501 TTC R01.KK34.0.0.TW.TS.P004	Манометр показывающий на морской воде, к-т. Pressure gauge for sea water, set.	2	0,85	1,7
27	Dу=15mm ГОСТ 3262-75 GOST	Труба стальная водогазопроводная, м Water-gas steel pipe, m	2	1,10	2,2
28	Dу= mm ГОСТ GOST	Нагнетательный трубопровод , м. Discharge line , м.			
29	Dу=50mm ГОСТ 18599-2001 GOST	Труба напорная из полиэтилена, м Polyethylene pressure pipes, m PE63 SDR11 DN63	19	1,06	20,14
30	Dу=63mm	Отвод 90°, шт Branch pipe, pcs. PE100 SDR11 DN63	5	17,5	87,5
31	Dу= mm ГОСТ 30753-2001 GOST	Отвод , шт. Branch pipe, pcs.			
32	Dу=15 mm ГОСТ 8946-75 GOST	Угольник из ковкого чугуна с цилиндрической резьбой, шт. Angle of maleable cast iron with cylindrical thread, pcs.	3	0,094	0,282

* - 2 датчика для 3GML20, 2 датчика для 3GML30
* - 2 switches for 3GML20, 2 switches for 3GML30

Таблица 3 (продолжение)
Table 3 (continued)

Поз. Items	Обозначение Designation	Наименование Name	Кол. Q-ty	Масса ед., кг Weight per unit, kg	Масса общая, кг Weight total, kg
33	Dу=63mm	Тройник 90° 63x63 PE100 SDR11 T-piece 90°, pcs	1	—	—
34	Dу=15 mm ГОСТ 8948-75 GOST	Тройник из ковкого чугуна с цилиндрической резьбой, шт. T-piece of maleable cast iron with cylindrical thread, pcs.	1	0,133	0,133
35		Переход редукционный, шт Reducer long, pcs Dу=63x90mm PE100 SDR11	6	—	—
36		Стальной фланец под втулку, шт Flanges steel for flanges adapter, pcs Dу=90mm	10	—	—
37		Втулка под фланец, шт Flange adaptor, pcs Dу=63mm PE100 SDR11	2	0,257	0,514
38	ГОСТ GOST	Фланец , шт Flange , pcs	2	2,54	5,08
39	ГОСТ 12820-80 GOST	Фланец 1-150-16 ст. 25 , шт Flange, pcs	2	7,81	15,62
40	ГОСТ 19903-74 GOST	Заглушка из листовой стали ø260, b=25мм, шт. Steel blind flange, pcs.	2	10,40	20,8
41	ГОСТ 7798-70 GOST	Болт М16-6gx80.58 (S24), шт. Bolt M16, pcs.	16	0.161	2,576
42	ГОСТ 5915-70 GOST	Гайка М16-6Н.5 (S24), шт. Nut M16, pcs.	16	0,037	0,592
43	ГОСТ 11371-78 GOST	Шайба 16.01.08кп.016, шт. Washer, pcs	16	0,01	0,16
44	Dу=100mm ГОСТ 10704-91 GOST	Труба стальная электросварная D100x4, м. Electrically welded steel pipe D100x4, m.	2	10.,26	20.52
45		Нипель М32, шт. Nippel M32 made of round steel ø65mm length 61mm, pcs.	4	2	8
46		Бобышка из круга ø 50 с внутренней резьбой М32, шт. Boss made of round steel ø 50mm with inner thread M32, pcs.	4	0,8	3,2
47	ГОСТ 19903-74 GOST	Заглушка из листовой стали ø205, b=11мм, шт. Steel blind flange, pcs.	4	2,85	11,4
48	ГОСТ 7798-70 GOST	Болт М16-6gx70.58 (S24), шт. Bolt M16, pcs.	32	0,145	4,64
49	ГОСТ 5915-70 GOST	Гайка М16-6Н.5 (S24), шт. Nut M16, pcs.	32	0,037	1,18
50		Прокладка DN100, δ=3мм, шт. Gasket DN100, pcs.	4	0,06	0,24
51		Сальник ø34/ø15, δ=25мм, шт. Gland ø34/ø15, pcs	4	0,02	0,08
52	ГОСТ GOST	Фундаментный болт , шт. Foundation bolt , шт.			
53	ГОСТ GOST	Гайка , шт. Nut , pcs.			
54	ГОСТ 12820-80 GOST	Фланец 1-100-16 ст. 25, шт Flange, pcs	10	2,14	21,4

Таблица 3 (продолжение)
Table 3 (continued)

Поз. Items	Обозначение Designation	Наименование Name	Кол. Q-ty	Масса ед., кг Weight per unit, kg	Масса общая, кг Weight total, kg
55	ТУ 3741-058-34390194--2004 Титановый сплав 3GML31AA201	Затвор дисковый регулирующий с ручным приводом для морской воды, шт. Pу=1,0 MPa DN=80mm Control Butterfly valve hand-operated, designed for sea water, pcs	2	—	—
56		Тройник 90° 63x32 PE100 SDR11 T-piece 90°, pcs	1	—	—
57		Отвод 90°, шт Pipe-bend 90°, pcs PE100 SDR11 DN32.	1	—	—
58		Переход редукционный, шт Reducer long, pcs Dу=32x20mm PE100 SDR11	1	—	—
59		Переход 20 ПЭ-сталь с наружной резьбой, шт Transition long 20 male-thread-con	1	—	—

СХЕМА РАСПОЛОЖЕНИЯ
KEY PLAN

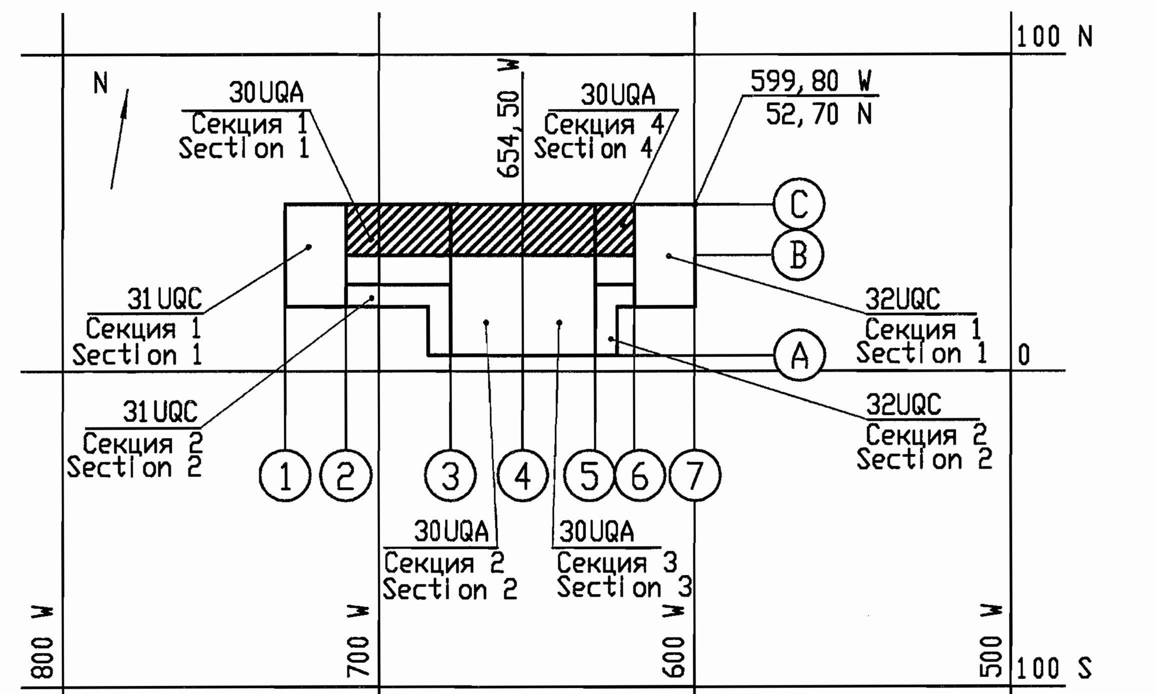

Package Number 3 8 6 75
File: R28 KK34 30UQA GML WK DK WD001_D12=0

Данный чертеж не подлежит размножению и передаче другим организациям и лицам без согласия ОА"ИНСТИТУТ ГИДРОПРОЕКТ" This drawing is not to be reproduced or transferred to other organizations or private persons without approval of the JSC "INSTITUTE HYDROPROJECT"							R28. KK34. 30UQA. GML. WK. DK. WD001			
							АЭС "КУДАНКУЛАМ" БЛОК 3 NPP "KUDANKULAM" UNIT 3			
	Изм. Rev.	N уч. N pat.	Лист Sheet	N док. Docum N	Подпись Signat.	Дата Date	30UQA Система сбора и отвода промышленных стоков после автоматического пожаротушения. Дренаж 30UQA System of collection and disposal of fire-fighting wastes. Drainage	Стадия Phase	Лист Sheet	Листов Sheets
	Утвердил Approved		Dudov		[signature]	07.18		WD	12	
	Н. контр. Inspector		Gorskaya		[signature]	07.18	Спецификация Specification	ГИДРОПРОЕКТ HYDROPROJECT JSC Institute Hydroproject MOSCOW 2018		
	Разраб. Designed		Gorskaya		[signature]	07.18				

формат А1

Inv.Nr 27993 Date 25.07.18

Orig. arch. Nr.	Date	Replace arch. Nr.
723725	07.18	

Ведомость рабочих чертежей основного комплекта
List of working drawings of the main set

Таблица 1
Table 1

Лист Sheet	Наименование Name	Примеч. Note
1	Общие данные General data	
2	Фрагменты планов на отметке -3,000; +3,450. Разрезы по 2-2; 3-3 Fragment of plans at elevations -3,000; +3,450. Sections 2-2; 3-3	
3	Разрезы 1-1; 4-4. Аксонометрическая схема 4GML10 Sections 1-1; 4-4. Axonometric scheme 3GML10	
4	Фрагмент плана на отметке -7,050. Установочный чертеж насосного агрегата Fragment of plan at elevation -7,050. Installation drawing of pumping unit	
5	Разрез 6-6, 7-7. Узлы A, B, C Section 6-6, 7-7. Details A, B, C	
6	Фрагменты планов на отметках -3,000; +3,450. Разрез 5-5 Fragment of plans at elevations -3,000; +3,450. Section 5-5.	
7	Аксонометрические схемы 3GML20, 3GML30 Axonometric schemes 3GML20, 3GML30	
8	Установка уровневых датчиков в приямках Installation of level switches in sump pit	
9	Крепления трубопроводов 4GML10. Тип IV. Спецификация Fixing of pipelines 4GML10. Type IV. Specification	
10	Крепления трубопроводов 4GML20. Тип I...ТипIII. Спецификация Fixing of pipelines 4GML20. TypeI...TypeIII. Specification	
11	Крепления трубопроводов 4GML30. Тип V. Спецификация Fixing of pipelines 4GML30. TypeV. Specification	
12	Спецификация Specification	

Условные обозначения
Legend

Таблица 2
Table 2

Обозначение Designation	Наименование Name
	Задвижка стальная сварная клиновая с выдвижным шпинделем фланцевая Steel welded wedged gate valve with telescopic spindle, flange connected
	Обратный клапан Check valve
	Трап Dn100 Trap Dn100
	Прочистка Clean-out
	Крепление трубопроводов Fixing of pipelines
—GML10—	Система сбора и отвода промышленных стоков после автоматического пожаротушения (безнапорная) System of fire extiguishing wastes disposal (gravity system)
—GML20—	Система сбора и отвода промышленных стоков после автоматического пожаротушения (напорная) System of fire extiguishing wastes disposal (pressure system)
—GML30—	Система откачки дренажа из основной насосной станции (напорная) Drainage pumping out system of the main pump house (pressure system)

Общие указания

1 Рабочие чертежи разработаны в соответствии с контрактом N 77-258/1415800 на разработку рабочей документации.

2 Рабочая документация разработана в соответствии с действующими нормами, правилами и стандартами РФ.

3 Системы водопровода и канализации относятся к системам нормальной эксплуатации, элементы систем имеют классификационное обозначение 4Н по ПНАЭГ-1-011-97 "Общие положения обеспечения безопасности атомных станций" (ОПБ-88/97).
Категория сейсмостойкости III по ПНАЭГ-5-006-87 "Нормы проектирования сейсмостойких атомных станций".

4 Монтаж и испытания систем водопровода и канализации должны быть произведены в соответствии с требованиями СНиП 3.05.01-85 "Внутренние санитарно-технические системы".

5 После монтажа и гидравлического испытания трубопроводы окрашиваются в соответствии с ГОСТ 14202-69.

6 Окрасить наружную поверхность стальных трубопроводов по схеме:
- цинк наполненная эпоксидная грунтовка ЗП-057 (ТУ6-10-1117-85) в 2 слоя толщиной 100 мкм
- эпоксидная эмаль ЗП-525 (ГОСТ22438-85 в 4 слоя толщиной 100мкм). Толщина покрытия не менее 200 мкм

7 Отметки указаны в системе MSL. И даны по осям труб.

8 Металлические трубы системы сбора и отвода промышленных стоков присоединить к системе заземления согласно СНиП 3.05.06-85.

General guidelines

1 The working drawings have been developed in compliance with Contract № 77-258/1415800 on the working drawings preparation.

2 Working drawings have been developed in accordance with the valid codes, regulations and standards of the Russian Federation.

3 Water supply and sewerage systems fall under the systems of normal operation; classification designation of elements - 4H as per PNAEG-1-011-97 "General Provisionsfor Assurance of Safety at Nuclear Power Stations" (ПРВ-88-97)
Earthquake resistance category III as per PNAEG-5-006-87 "Code for Designing Earthquake - Resistant Atomic Station".

4 Erection and tests of water supply and sewerage systems shall be performed in compliance with the Code of pracfice SNiP 3.05.01-85 "Indoor sanitary engineering systems"

5 After their instalation and the hydraulic test the pipes are to be painted with oil paint two times in accordance with GOST 14202-69.

6 To paint the outer surface of steel pipelines as follows:
-zink-filled epoxy prime coat ЗП-057(ТУ6-10-1117-85), two coats, 100 mkm thick
-epoxy enamel ЗП-525 (GOST 22438-85), 4 coats, 100mkm thick. Coat thickness shall be not less than 200mkm

7 Elevations are indicated in MSL system. Also are given on axises of pipes.

8 Steel pipes of system of collection and disposal of fire-fighting wastes shall be connected to earthing system according to SNiP 3.05.06-85.

СХЕМА РАСПОЛОЖЕНИЯ
KEY PLAN

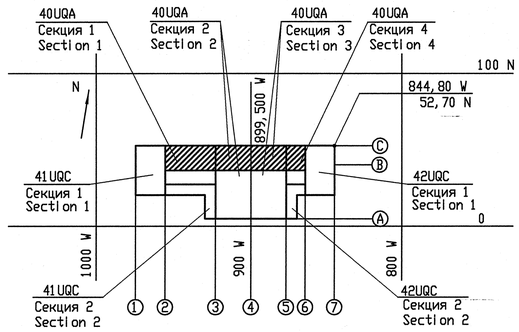

Ведомость ссылочных документов
Table of reference documents

Таблица 3
Table 3

Обозначение Designation	Наименование Name	Примечание Note
Шифр пакета Package Number 3 6 2 43 R28. KK34. 40UQA. 0. KZ. ПК. WD017	40UQA Секция 2,3 с отметки -7,350 до отметки -3,300. Геометрия 40UQA Section 2,3 from elevation -7,350 up to elevation -3,300. Geometry	
Шифр пакета Package Number 3 6 2 63 R28. KK34. 40UQA. 0. KZ. ПК. WD025	40UQA Секция 1 с отметки +2,850м до отметки +6,800м оси 2-3. Геометрия 40UQA Section 1 from elevation +2,850m to elevation +6,800m axes 2-3. Geometry	
Шифр пакета Package Number 3 6 2 13 R28. KK34. 40UQA. 0. KZ. ПК. WD013	40UQA Секция 4с отметки -7,350 до отметки -3,300. Оси 5-6. Геометрия 40UQA Section 4 from elevation -7,350 up to elevation -3,300. Axes 5-6. Geometry	
Шифр пакета Package Number 3 6 2 64 R28. KK34. 40UQA. 0. KZ. ПК. WD027	40UQA Секция 4 с отметки +2,850 до отметки +6,750. Геометрия 40UQA Section 4 from elevation +2,850 to elevation +6,750. Geometry	

Таблица 3 (продолжение)
Table 3 (continued)

Обозначение Designation	Наименование Name	Примечание Note
Шифр пакета Package Number 3 7 2 6 R28. KK34. 40UQA. 0. KZ. ПК. WD023 R28. KK34. 40UQA. 0. KZ. ПК. WD053	40UQA Секция 2,3 с отметки -3,300 до отметки +2,850 в осях B-C. Геометрия 40UQA Section 2,3 from elevation -3,300 up to elevation +2,850 axes B-C. Geometry	
Шифр пакета Package Number 3 7 2 12 R28. KK34. 40UQA. 0. KZ. ПК. WD055	40UQA Секции 2,3 с отметки +2,850м до отметки +6,800м. Геометрия 40UQA Sections 2,3 from elevation +2,850m to elevation +6,800m. Geometry	

Package Number 3 9 6 105

Rev	Issue	Issued for	Signature	Issue sheet N

File: R28 KK34 40UQA GML WK ПК WD001_001=0

Принял Accepted	Kats	
Arch. No	Date	

JSC "Atomenergoproekt" Moscow 2018

При переписке в ссылке на документ (лист документа) следует указать его обозначение, приведенное в основной надписи

In correspondence referring to the document (sheet of the document) it is nesessary to specify its designation, given in the basic inscription

Данный чертеж не подлежит размножению и передаче другим организациям и лицам без согласия ОАО "ИНСТИТУТ ГИДРОПРОЕКТ"

This drawing is not to be reproduced or transferred to other organizations or private persons without approval of the JSC "INSTITUTE HYDROPROJECT"

Изм. Rev.	N уч. N pat.	Лист Sheet	N док. Docum N	Подпись Signat.	Дата Date
Утвердил Approved			Ratnikov		07.18
Н. контр. Inspector			Gorskaya		07.18
Разраб. Designed			Dudov		07.18

NUCLEAR POWER CORPORATION OF INDIA LTD

R28. KK34. 40UQA. GML. WK. ПК. WD001

АЭС "КУДАНКУЛАМ" БЛОК 4
NPP "KUDANKULAM" UNIT 4

40UQA
Система сбора и отвода промышленных стоков после автоматического пожаротушения. Дренаж
40UQA
System of collection and disposal of fire-fighting wastes. Drainage

Стадия Phase	Лист Sheet	Листов Sheets
WD	1	12

Общие данные
General data

JSC Institute Hydroproject MOSCOW 2018

формат A1

Inv.Nr 28186 Date 13.08.2018
0 605007 2372775
Replace arch. №
Date 07.2018
Orig. arch. №
723727

План на отметке -3,000
Plan at elevation -3,000

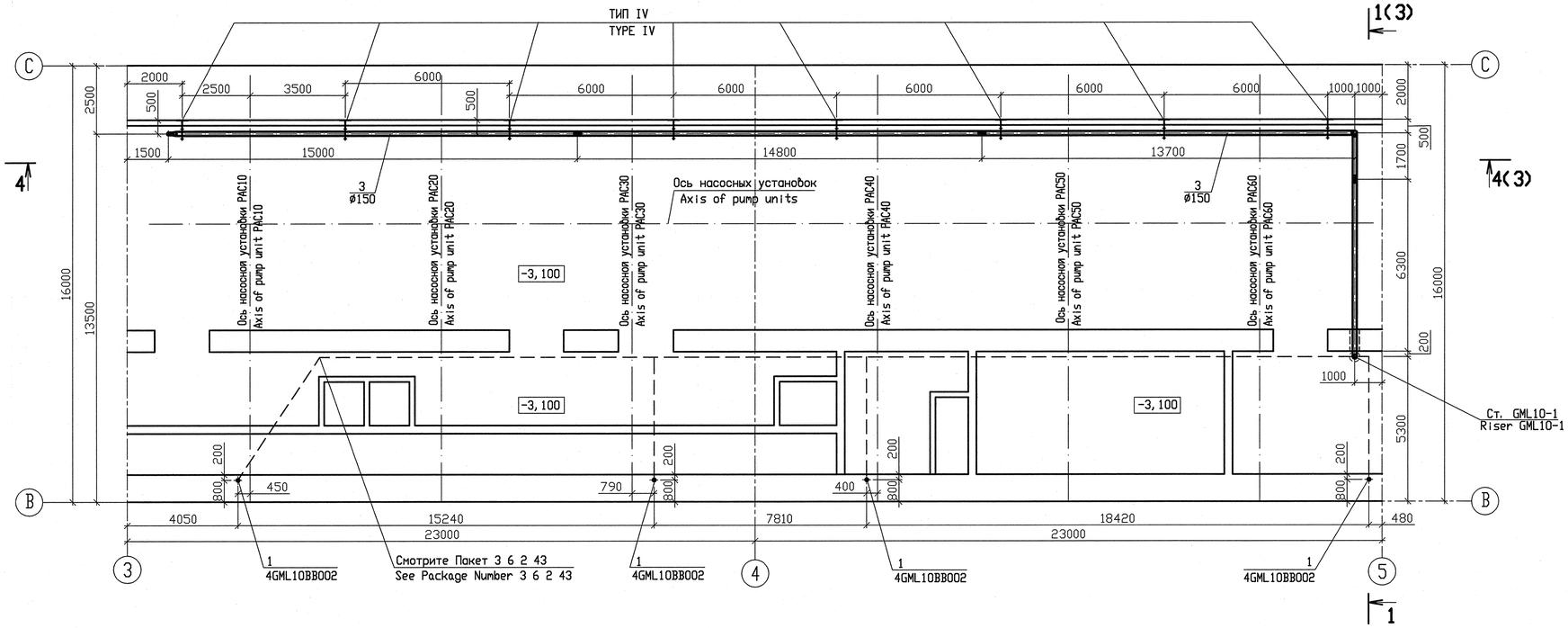

2-2

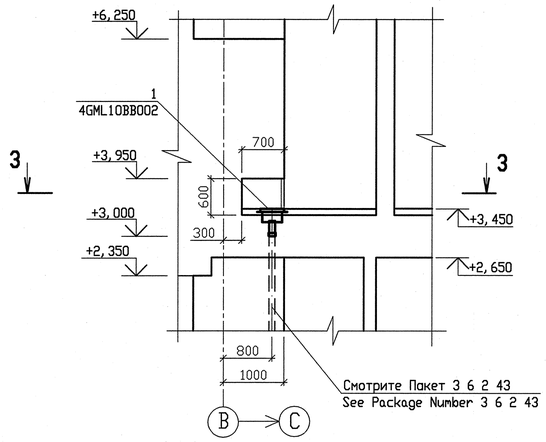

3-3

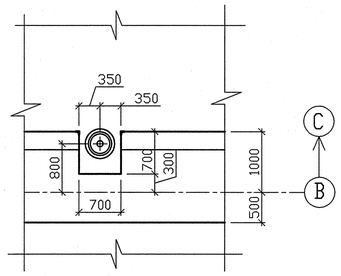

План на отметке +3,450
Plan at elevation +3,450

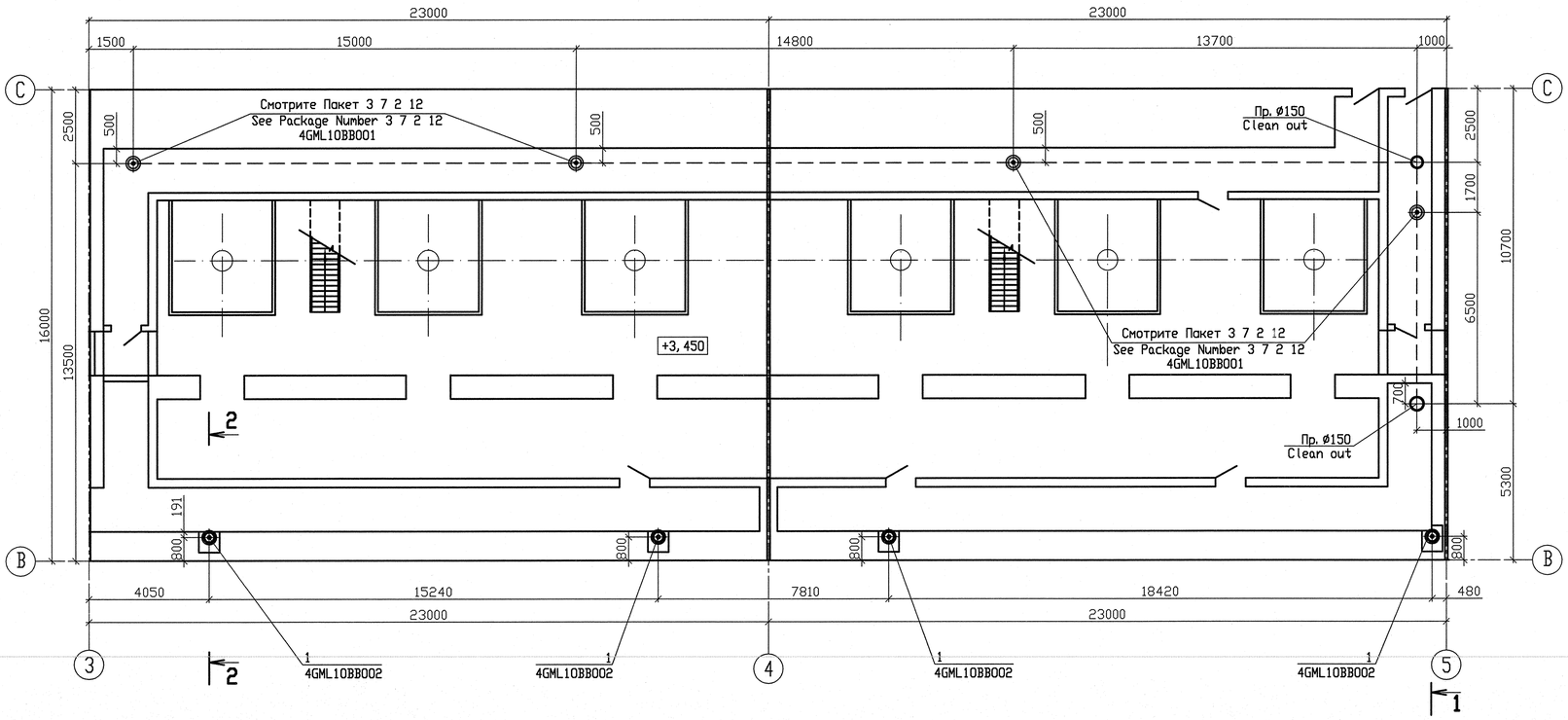

СХЕМА РАСПОЛОЖЕНИЯ
KEY PLAN

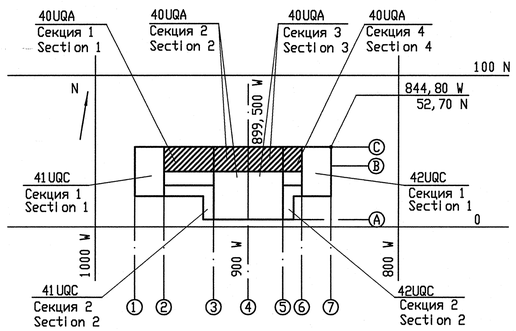

Package Number 3 9 6 105
File: R28 KK34 40UQA GML WK DK WD001_002=0

Данный чертеж не подлежит размножению и передаче другим организациям и лицам без согласия ОАО "ИНСТИТУТ ГИДРОПРОЕКТ"

This drawing is not to be reproduced or transferred to other organizations or private persons without approval of the JSC "INSTITUTE HYDROPROJECT"

Изм. Rev.	N уч. N pat.	Лист Sheet	N док. Docum N	Подпись Signat.	Дата Date	R28. KK34. 40UQA. GML. WK. DK. WD001
Утвердил Approved		Dudov			04.18	АЭС "КУДАНКУЛАМ" БЛОК 4 NPP "KUDANKULAM" UNIT 4
Н. контр. Inspector		Gorskaya			04.18	40UQA Система сбора и отвода промышленных стоков после автоматического пожаротушения. Дренаж 40UQA System of collection and disposal of fire-fighting wastes. Drainage
Разраб. Designed		Gorskaya			04.18	Фрагменты планов на отметке -3,000; +3,450. Разрезы 2-2; 3-3 Fragment of plans at elevations -3,000; +3,450. Sections 2-2; 3-3

Стадия Phase	Лист Sheet	Листов Sheets
WD	2	

ГИДРОПРОЕКТ HYDROPROJECT JSC Institute Hydroproject MOSCOW 2018

формат A1

Inv.Nr 28186 Date 13.08.2018

Drig. arch. №	Date	Replace arch. №
723727	04.2018	

1-1 (2)

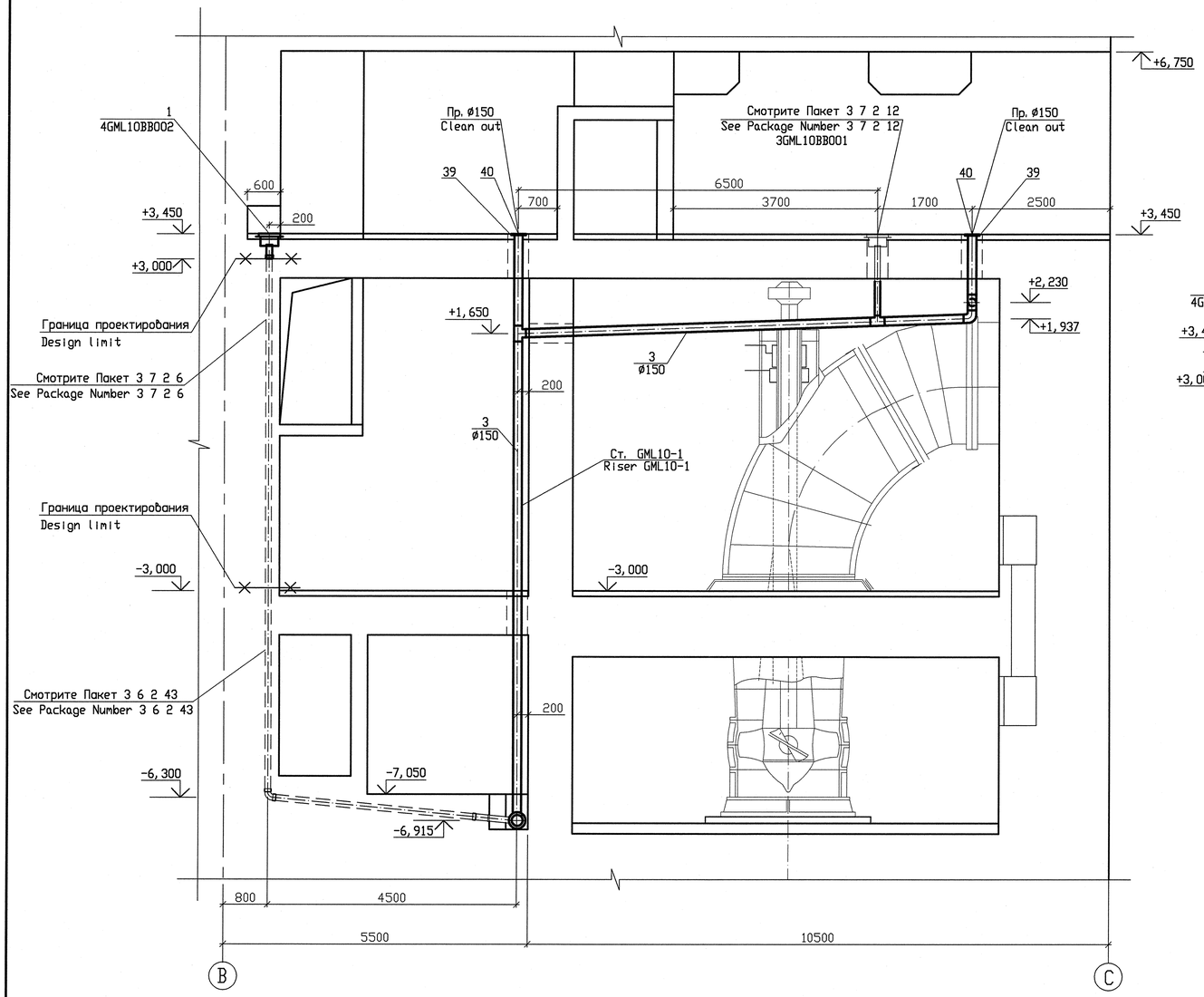

Аксонометрическая схема 4GML10
Axonometric scheme

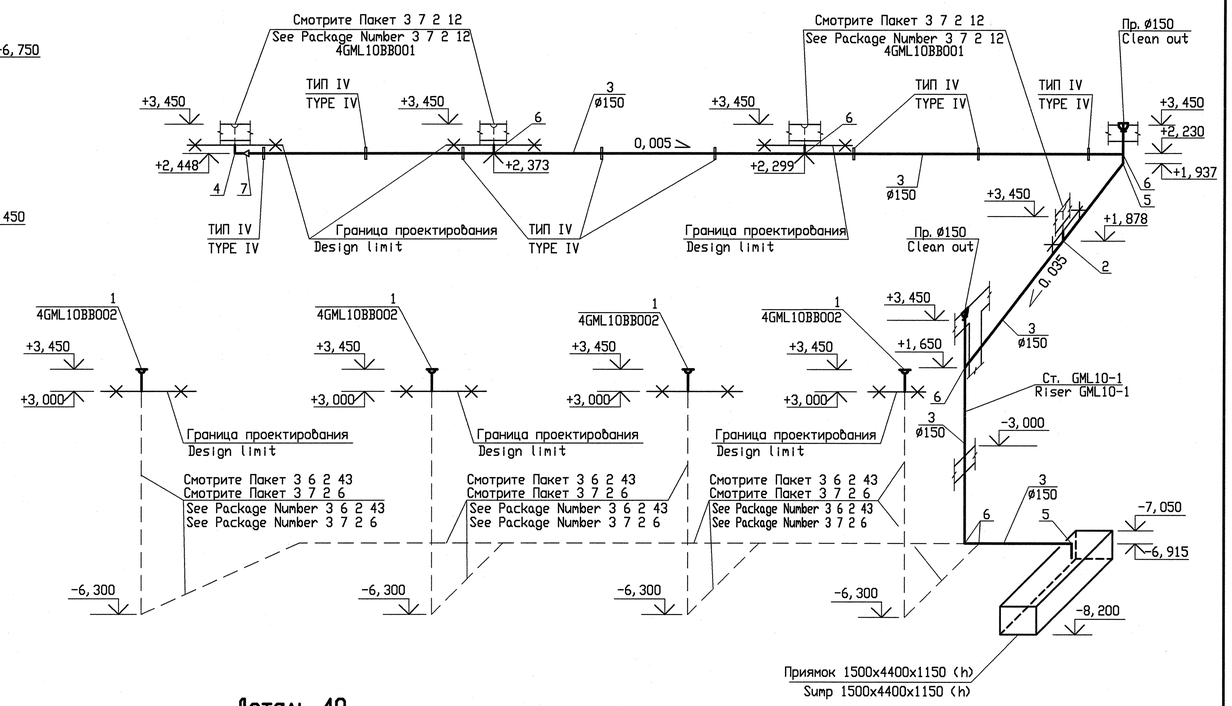

Деталь 40
Detail item 40

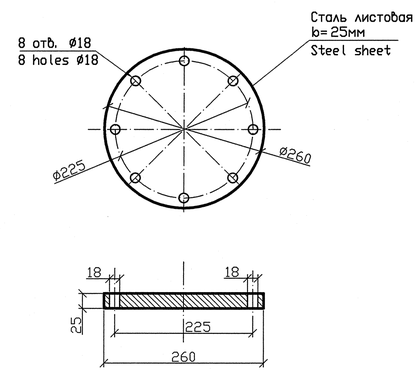

СХЕМА РАСПОЛОЖЕНИЯ
KEY PLAN

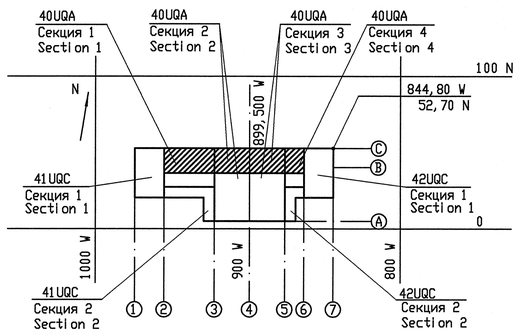

4-4 (2)

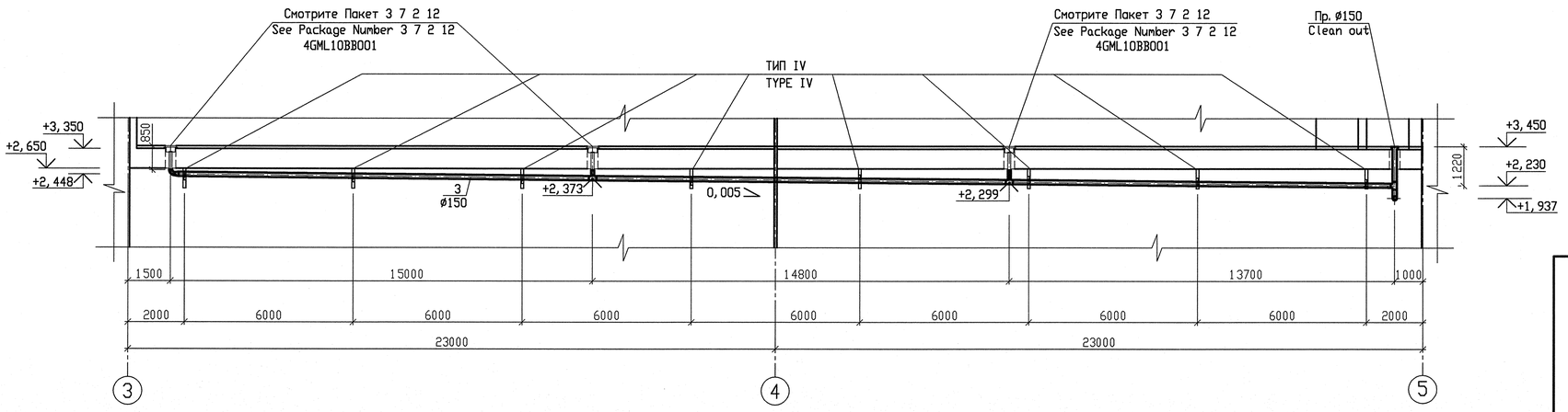

Package Number 3 9 6 105
File: R28 KK34 4OUQA GML WK ПК WD001_003=0

Данный чертеж не подлежит размножению и передаче другим организациям и лицам без согласия ОА "ИНСТИТУТ ГИДРОПРОЕКТ"

This drawing is not to be reproduced or transferred to other organizations or private persons without approval of the JSC "INSTITUTE HYDROPROJECT"

Изм. / Rev.	N уч. / N pat.	Лист / Sheet	N док. / Docum N	Подпись / Signat.	Дата / Date
Утвердил / Approved		Dudov			04.18
Н. контр. / Inspector		Gorskaya			04.18
Разраб. / Designed		Gorskaya			04.18

R28. KK34. 4OUQA. GML. WK. ПК. WD001

АЭС "КУДАНКУЛАМ" БЛОК 4
NPP "KUDANKULAM" UNIT 4

4OUQA
Система сбора и отвода промышленных стоков после автоматического пожаротушения. Дренаж
4OUQA
System of collection and disposal of fire-fighting wastes. Drainage

Разрезы 1-1; 4-4.
Аксонометрическая схема 4GML10
Sections 1-1; 4-4.
Axonometric scheme 4GML10

Стадия / Phase	Лист / Sheet	Листов / Sheets
WD	3	

ГИДРОПРОЕКТ / HYDROPROJECT
JSC Institute Hydroproject
MOSCOW 2018

формат A1

Inv.Nr 28186 Date 13.08.2018

Orig. arch. Nr.	Date	Replace arch. Nr.
723727	04.2018	

Фрагмент плана на отметке -7,050
Fragment of plan at elevation -7,050

Установочный чертеж электронасосных агрегатов GML30
Installation drawing of pumping units

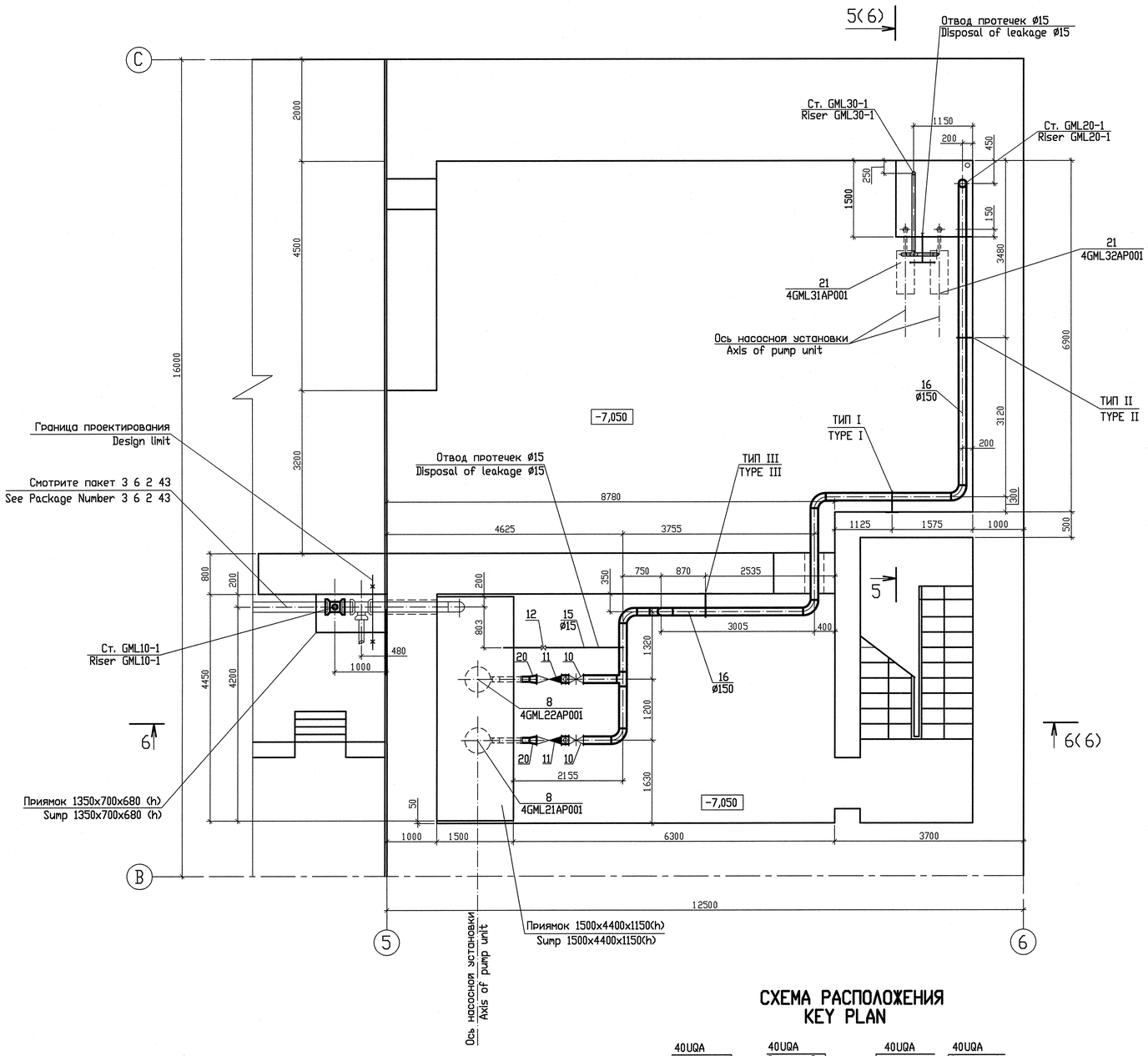

СХЕМА РАСПОЛОЖЕНИЯ
KEY PLAN

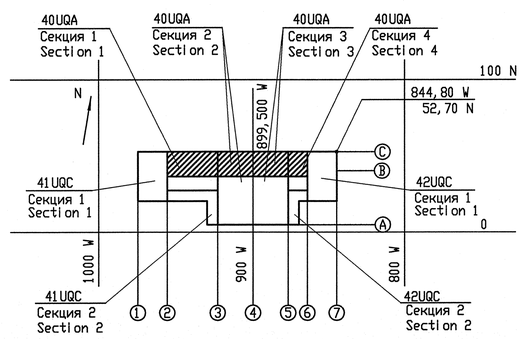

Package Number 3 9 6 105
File: R28 KK34 40UQA GML WK DK WD001_004=0

Данный чертеж не подлежит размножению и передаче другим организациям и лицам без согласия ОАО "ИНСТИТУТ ГИДРОПРОЕКТ" / This drawing is not to be reproduced or transferred to other organizations or private persons without approval of the JSC "INSTITUTE HYDROPROJECT"	Изм. / Rev.	N уч. / N par.	Лист / Sheet	N док. / Docum N	Подпись / Signat.	Дата / Date	R28. KK34. 40UQA. GML. WK. DK. WD001 АЭС "КУДАНКУЛАМ" БЛОК 4 NPP "KUDANKULAM" UNIT 4		
							40UQA Система сбора и отвода промышленных стоков после автоматического пожаротушения. Дренаж 40UQA System of collection and disposal of fire-fighting wastes. Drainage	Стадия / Phase	Лист / Sheet	Листов / Sheets
	Утвердил / Approved			Dudov		04.18		WD	4	
	Н. контр. / Inspector			Gorskaya		04.18	Фрагмент плана на отметке -7,050. Установочный чертеж насосного агрегата Fragment of planat elevation -7,050. Installation drawing of pumping unit	JSC Institute Hydroproject MOSCOW 2018		
	Разраб. / Designed			Gorskaya		04.18				

формат A1

Inv.Nr 28186 Date 13.08.2018

Sign. arch. Nr.	Date	Replace arch. Nr.
723727	04.2018	

Разрез 6-6 (1:50)
Section 6-6

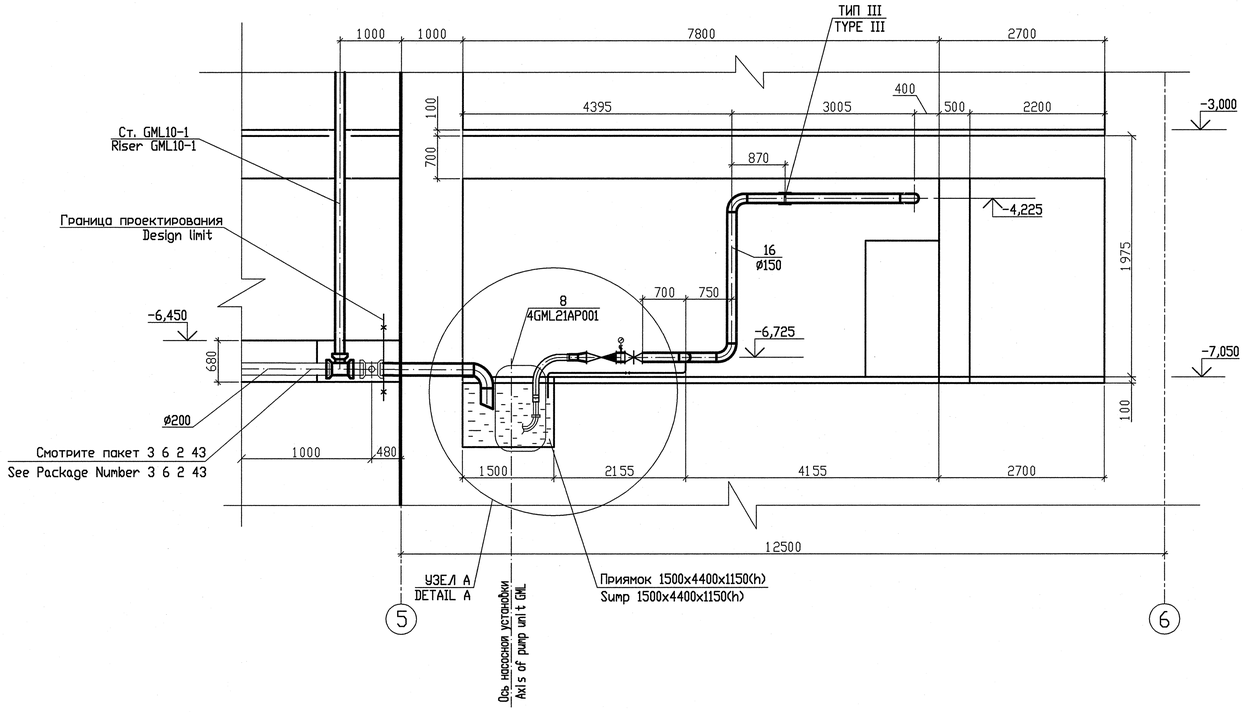

Разрез 7-7(6) (1:25)
Section 7-7(6)

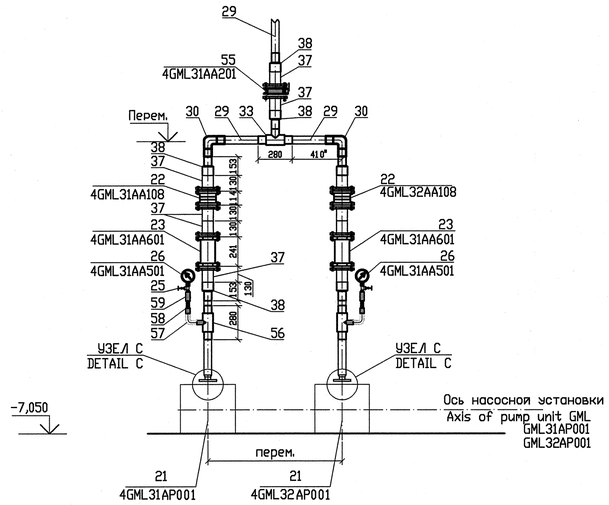

Узел С
Detail C

Узел А (1:25)
Detail A

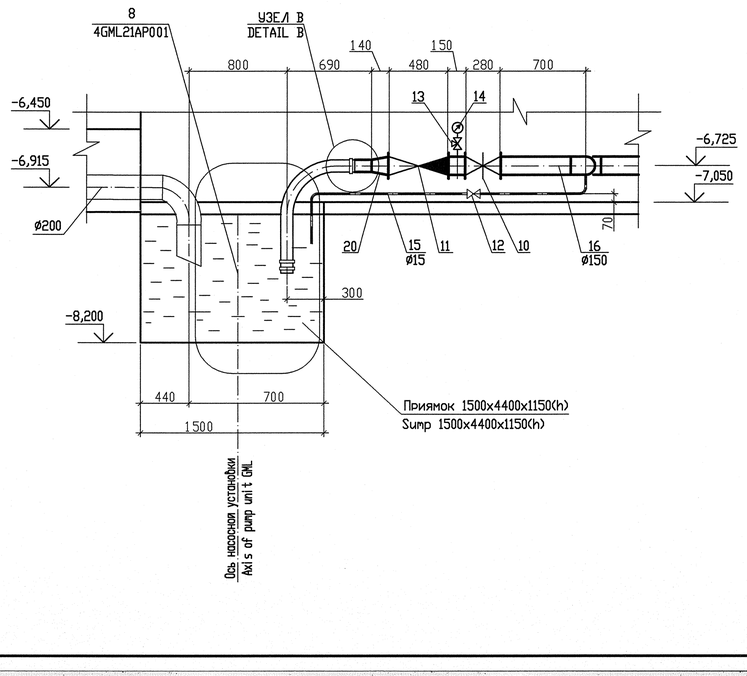

Узел В (1:5)
Detail B

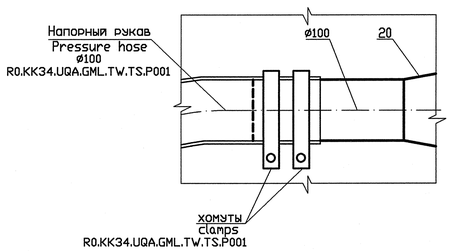

СХЕМА РАСПОЛОЖЕНИЯ
KEY PLAN

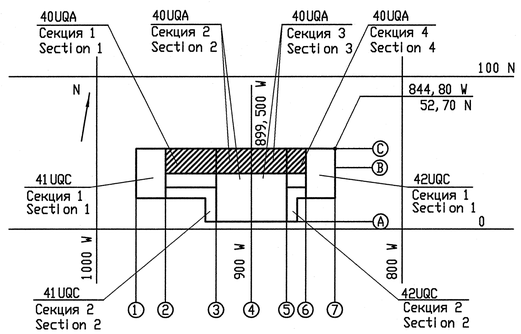

Package Number 3 9 6 105
File: R28 KK34 40UQA GML WK ПК WD001_005=0

Данный чертеж не подлежит размножению и передаче другим организациям и лицам без согласия ОАО "ИНСТИТУТ ГИДРОПРОЕКТ"

This drawing is not to be reproduced or transferred to other organizations or private persons without approval of the JSC "INSTITUTE HYDROPROJECT"

Изм. / Rev.	N уч. / N pat.	Лист / Sheet	N док. / Docum N	Подпись / Signat.	Дата / Date
Утвердил / Approved		Dudov			04.18
Н. контр. / Inspector		Gorskaya			04.18
Разраб. / Designed		Gorskaya			04.18

R28. KK34. 40UQA. GML. WK. ПК. WD001

АЭС "КУДАНКУЛАМ" БЛОК 4
NPP "KUDANKULAM" UNIT 4

40UQA
Система сбора и отвода промышленных стоков после автоматического пожаротушения. Дренаж
40UQA
System of collection and disposal of fire-fighting wastes. Drainage

Разрез 6-6, 7-7
Узлы А, В, С
Sections 6-6, 7-7
Details A, B, C

Стадия / Phase	Лист / Sheet	Листов / Sheets
WD	5	

JSC Institute Hydroproject MOSCOW 2018

формат А1

Inv.Nr 28186 Date 13.08.2018

Orig. arch. Nr.	Date	Replace arch. Nr.
723727	07.2018	

Фрагмент плана на отметке -3,000
Fragment of plan at elevation -3,000

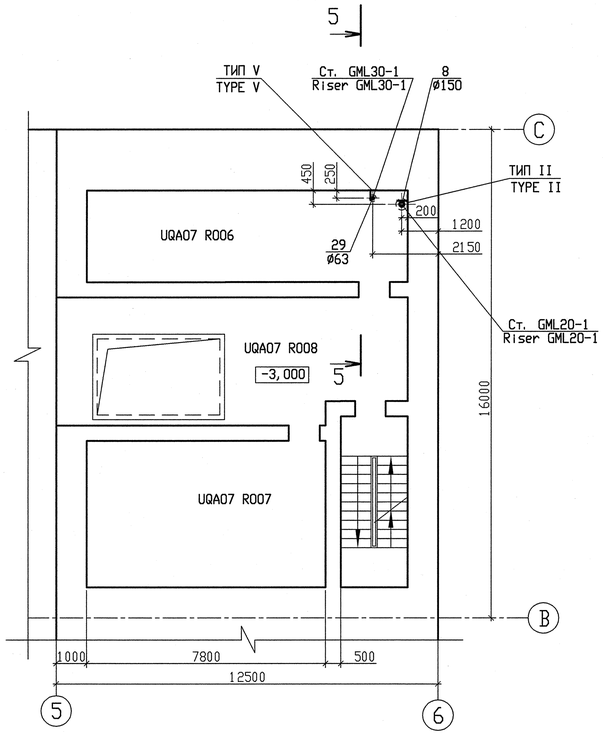

Разрез 5-5 (1:50)
Section 5-5

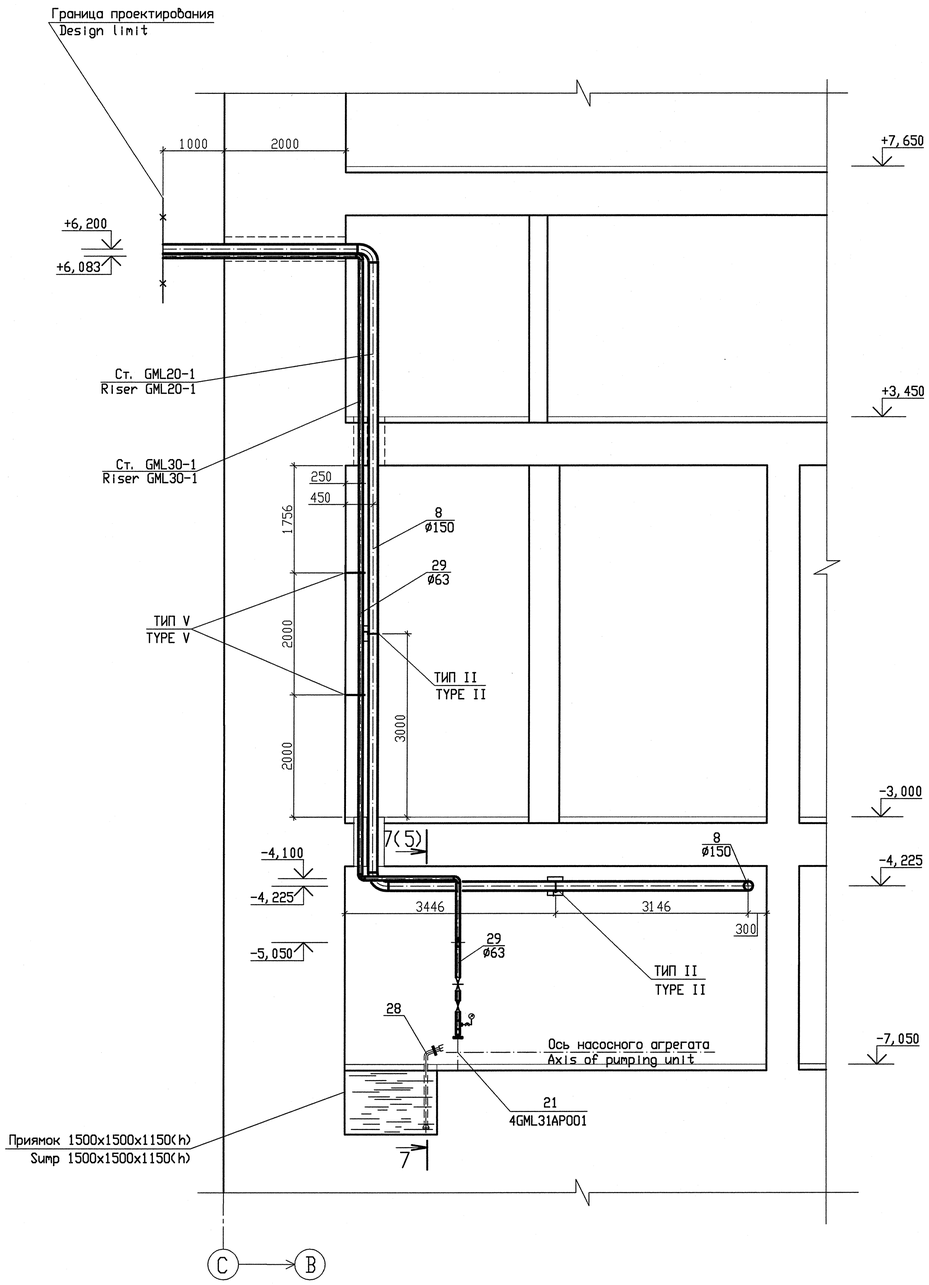

Экспликация помещений
Explication of rooms

Номер помещения Room number	Наименование Description
UQA13	Основная насосная станция Main pump house
UQA13 R006	Рекреация Recreation
UQA13 R007	Комната отдыха персонала Rest room for personnel
UQA13 R008	Пункт управления автоматического пожаротушения Control room of automatic fire-fighting system
UQA13 R009	Санузел W. C.
UQA13 R010	Санузел W. C.
UQA13 R013	Техническое помещение Technical room

СХЕМА РАСПОЛОЖЕНИЯ
KEY PLAN

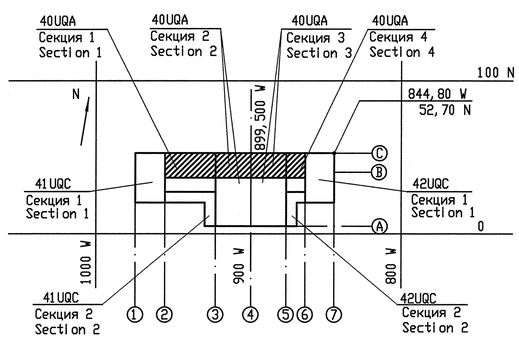

Фрагмент плана на отметке +3,450
Fragment of plan at elevation +3,450

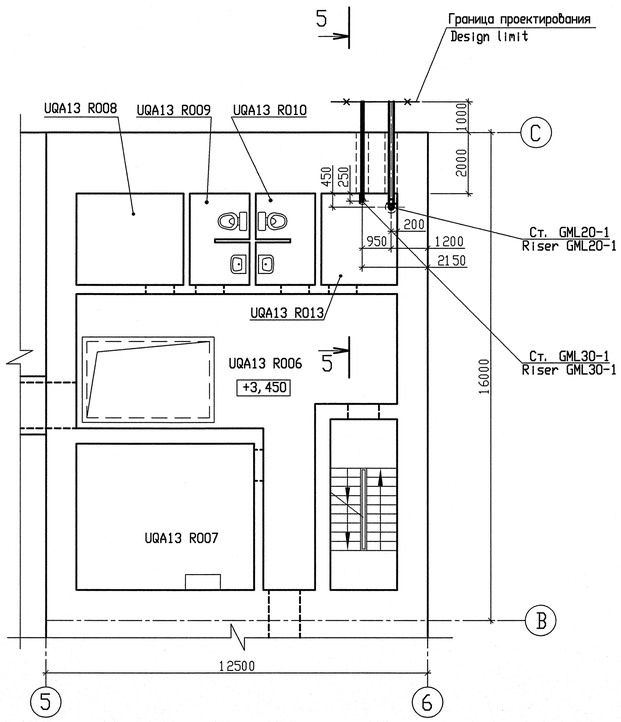

Package Number 3 9 6 105
File: R28 KK34 4OUQA GML WK OK WD001_006=0

Данный чертеж не подлежит размножению и передаче другим организациям и лицам без согласия ОАО "ИНСТИТУТ ГИДРОПРОЕКТ"

This drawing is not to be reproduced or transferred to other organizations or private persons without approval of the JSC "INSTITUTE HYDROPROJECT"

Изм. Rev.	N уч. N pat.	Лист Sheet	N док. Docum N	Подпись Signat.	Дата Date
Утвердил Approved		Dudov			04.18
Н. контр. Inspector		Gorskaya			04.18
Разраб. Designed		Gorskaya			04.18

R28. KK34. 4OUQA. GML. WK. OK. WD001

АЭС "КУДАНКУЛАМ" БЛОК 4
NPP "KUDANKULAM" UNIT

4OUQA
Система сбора и отвода промышленных стоков после автоматического пожаротушения. Дренаж
4OUQA
System of collection and disposal of fire-fighting wastes. Drainage

Фрагменты планов на отметках -3,000 ; +3,450. Разрез 5-5
Fragment of plans at elevations -3,000 ; +3,450. Section 5-5

Стадия Phase	Лист Sheet	Листов Sheets
WD	6	

JSC Institute Hydroproject MOSCOW 2018

формат A1

Inv.Nr 28186 Date 13.08.2018

Orig. arch. №	Date	Replace arch. №
723727	04.2018	

Аксонометрическая схема 4GML30
Axonometric scheme 4GML30

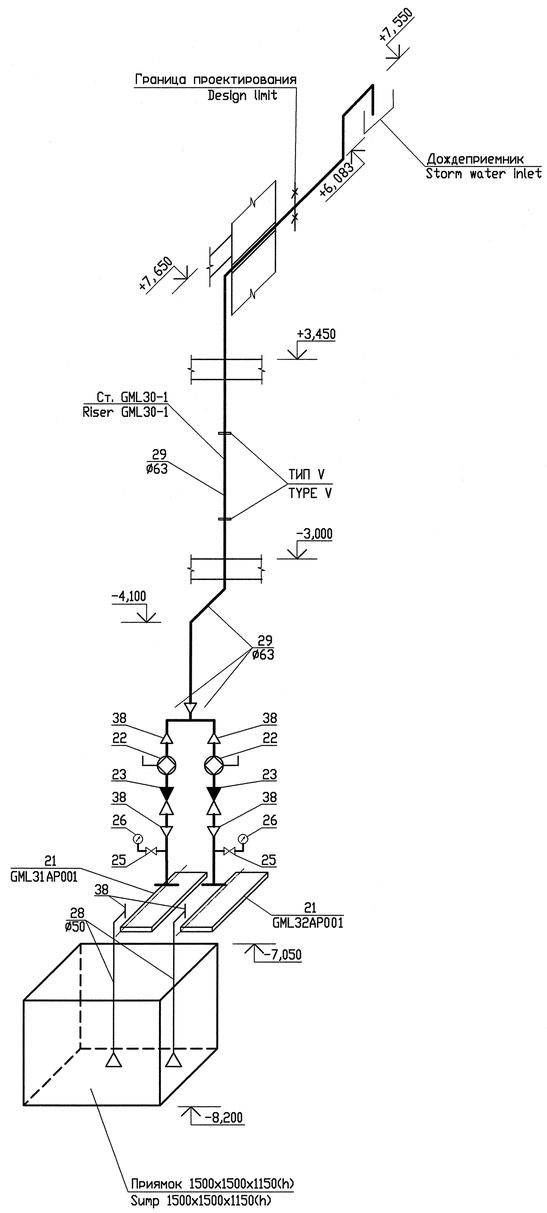

Отвод протечек от 4GML30
Disposal of leakages from 4GML30

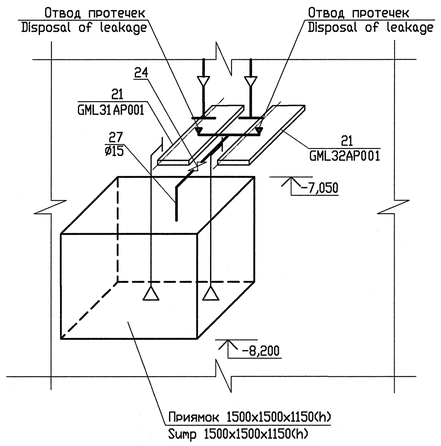

Аксонометрическая схема 4GML20
Axonometric scheme 4GML20

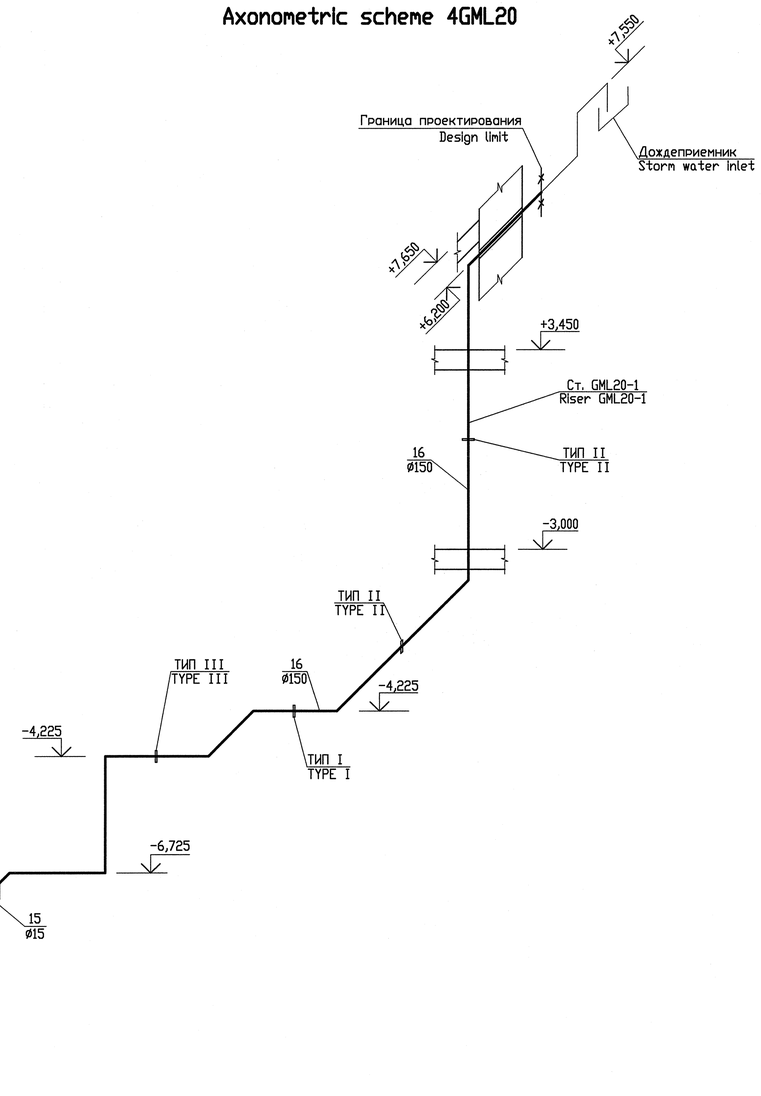

СХЕМА РАСПОЛОЖЕНИЯ
KEY PLAN

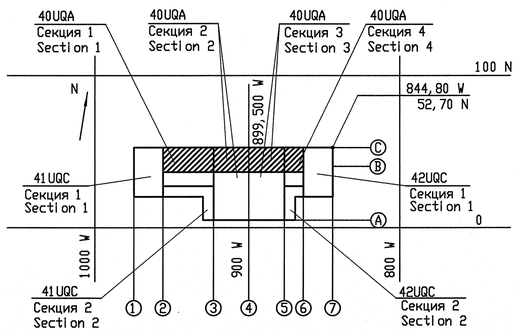

Трубопровод 4GML30 уложить на песчаное основание, монтаж в соответствии с СП 40-102-2000.
Lay the pipeline 4GML30 on sand bedding, pipe have been erected by SP 40-102-2000.

Package Number 3 9 6 105
File: R28 KK34 40UQA GML WK DK WD001_007=0

Данный чертеж не подлежит размножению и передаче другим организациям и лицам без согласия ОА "ИНСТИТУТ ГИДРОПРОЕКТ"

This drawing is not to be reproduced or transferred to other organizations or private persons without approval of the JSC "INSTITUTE HYDROPROJECT"

Изм. Rev.	N уч. N par.	Лист Sheet	N док. Docum N	Подпись Signat.	Дата Date
Утвердил Approved		Dudov			04.18
Н. контр. Inspector		Gorskaya			04.18
Разраб. Designed		Gorskaya			04.18

R28. KK34. 40UQA. GML. WK. DK. WD001

АЭС "КУДАНКУЛАМ" БЛОК 4
NPP "KUDANKULAM" UNIT

40UQA
Система сбора и отвода промышленных стоков после автоматического пожаротушения. Дренаж
40UQA
System of collection and disposal of fire-fighting wastes. Drainage

Аксонометрические схемы 4GML20, 4GML30
Axonometric schemes 4GML20, 4GML30

Стадия Phase	Лист Sheet	Листов Sheets
WD	7	

ГИДРОПРОЕКТ HYDROPROJECT
JSC Institute Hydroproject MOSCOW 2018

формат A1

Inv.Nr 28186 Date 13.08.2018

Orig. arch. Nr.	Replace arch. Nr.	Date
723727		04.2018

Расположение уровневых датчиков в приямке 4GML20
Location of level switches in sump pit 4GML20
(1:25)

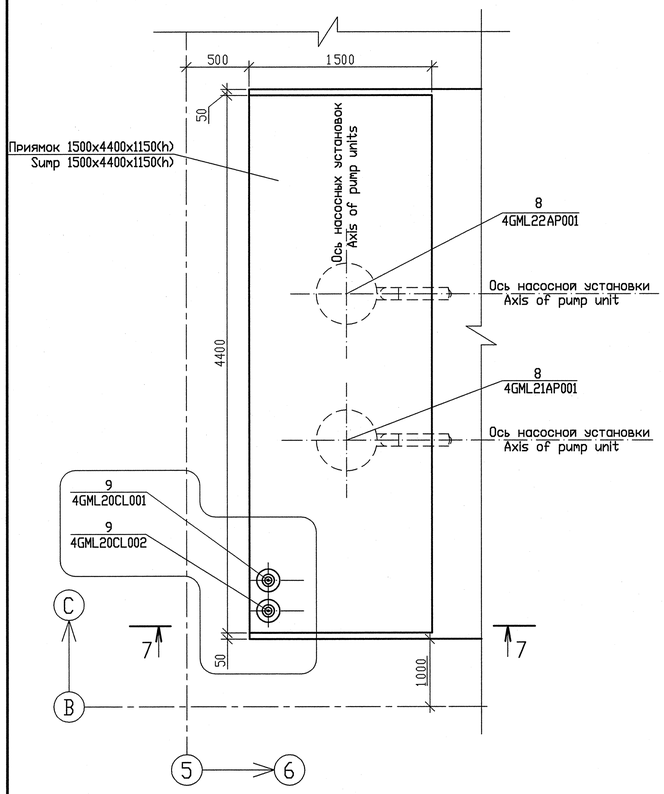

Расположение уровневых датчиков в приямке 4GML30
Location of level switches in sump pit 4GML30
(1:25)

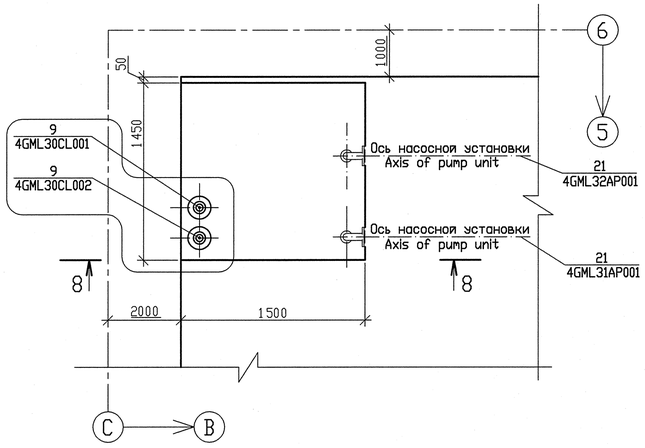

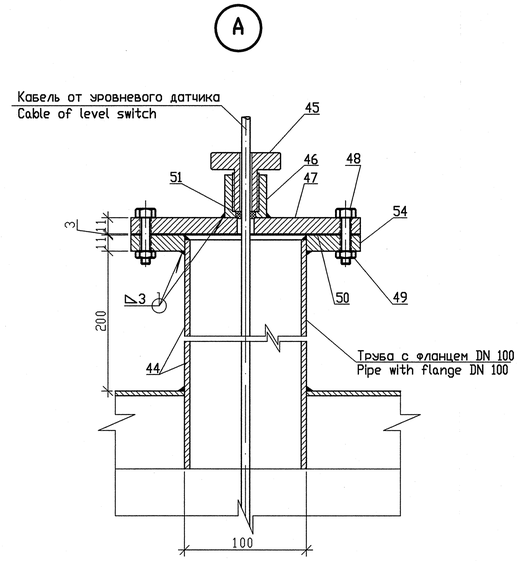

8-8

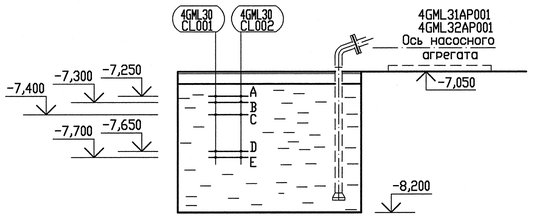

8-8

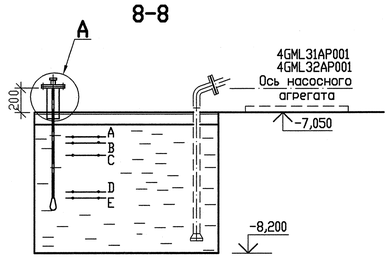

A - Сигнал о высоком уровне -7,250
Signal of high level
B - Включение рабочего насоса -7,300
Start of service pump
C - Включение резервного насоса -7,400
Start of stand-by pump
D - Отключение всех насосов -7,650
Stop of pumps
E - Сигнал о низком уровне -7,700
Signal of low level

Деталь 45
Detail Item 45

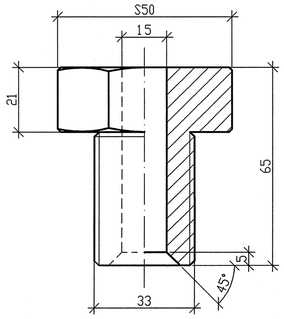

Деталь 47
Detail Item 47

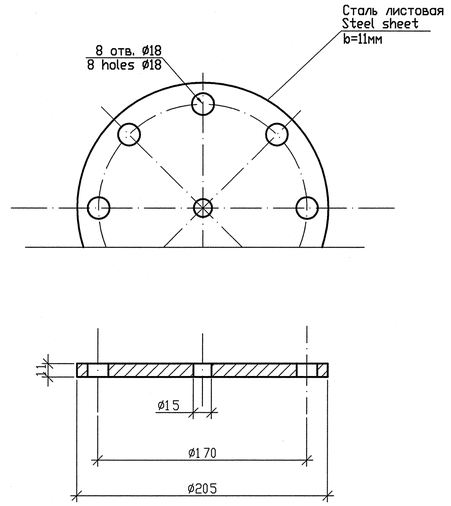

Деталь 46
Detail Item 46

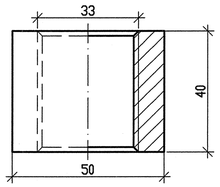

7-7

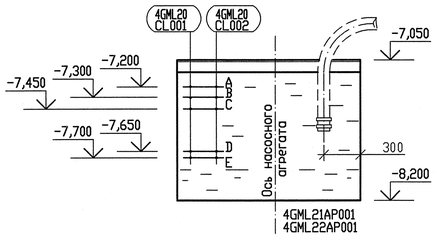

7-7

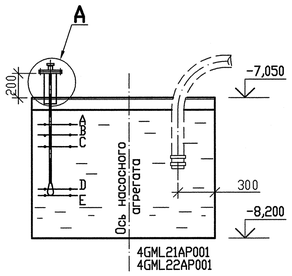

A - Сигнал о высоком уровне -7,200
Signal of high level
B - Включение рабочего насоса -7,300
Start of service pump
C - Включение резервного насоса -7,450
Start of stand-by pump
D - Отключение всех насосов -7,650
Stop of pumps
E - Сигнал о низком уровне -7,700
Signal of low level

СХЕМА РАСПОЛОЖЕНИЯ
KEY PLAN

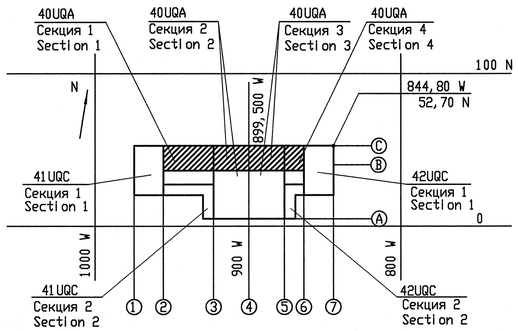

Package Number 3 9 6 105
File: R28 KK34 4OUQA GML WK DK WD001_008=0

Данный чертеж не подлежит размножению и передаче другим организациям и лицам без согласия ОАО "ИНСТИТУТ ГИДРОПРОЕКТ"

This drawing is not to be reproduced or transferred to other organizations or private persons without approval of the JSC "INSTITUTE HYDROPROJECT"

Изм.	N уч.	Лист	N док.	Подпись	Дата
Rev.	N pat.	Sheet	Docum N	Signat.	Date
Утвердил Approved			Dudov		04.18
Н. контр. Inspector			Gorskaya		04.18
Разраб. Designed			Gorskaya		04.18

R28. KK34. 4OUQA. GML. WK. DK. WD001

АЭС "КУДАНКУЛАМ" БЛОК 4
NPP "KUDANKULAM" UNIT 4

4OUQA
Система сбора и отвода промышленных стоков после автоматического пожаротушения. Дренаж
4OUQA
System of collection and disposal of fire-fighting wastes. Drainage

Установка уровневых датчиков в приямках
Installation of level switches in sump pit

Стадия	Лист	Листов
Phase	Sheet	Sheets
WD	8	

JSC Institute Hydroproject MOSCOW 2018

формат A1

Inv.Nr 28186 Date 13.08.2018

Orig. arch. Nr.	Date	Replace arch. Nr
723727	04.2018	

Тип IV
Type IV

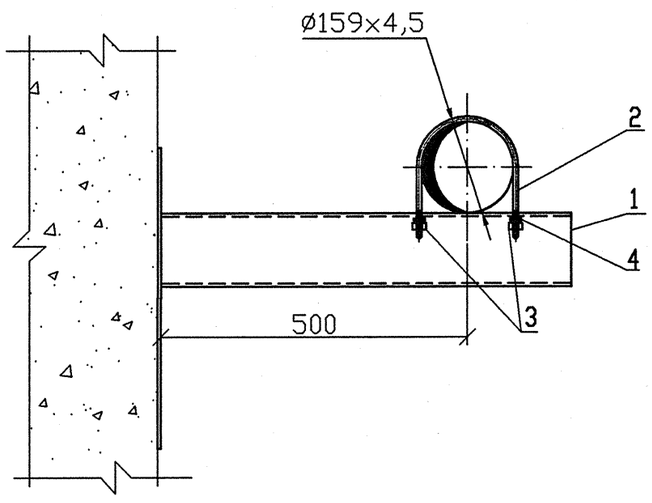

Ведомость деталей
List of parts

Таблица 1
Table 1

Поз. Item	Эскиз Sketch
1	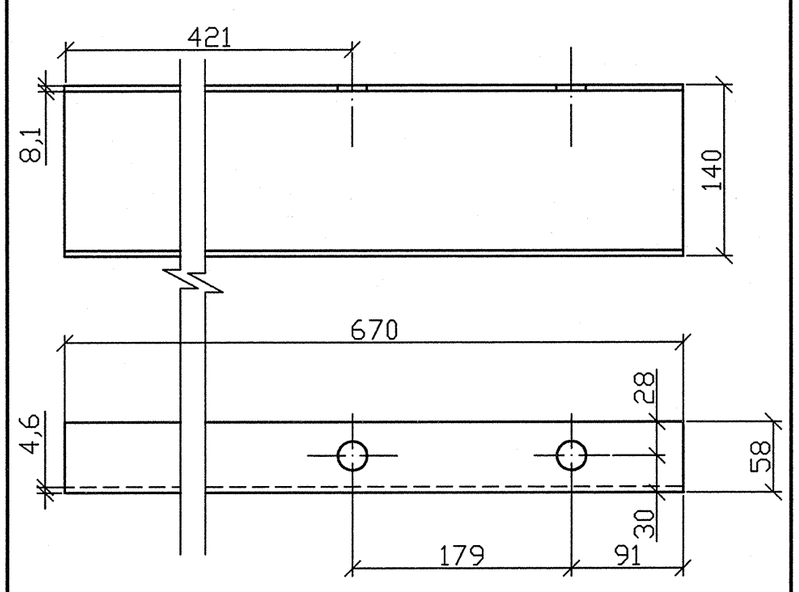
2	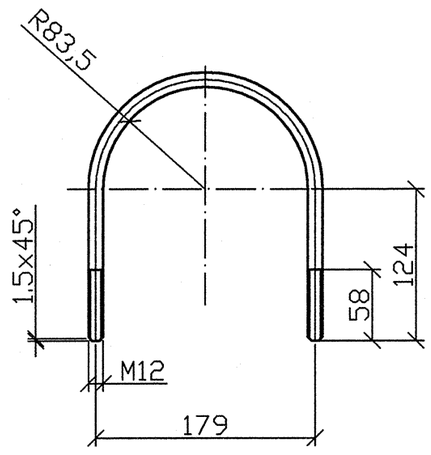 L разв.=510мм L development length=510mm

Спецификация
Specification

Таблица 2
Table 2

Поз. Items	Обозначение Designation	Наименование Name	Кол. Q-ty	Масса ед., кг Weight per unit, kg	Примеч. Note
		Тип IV Type IV	8	8,662	69,30
1	Швеллер $\frac{143\ ГОСТ\ 8240-97}{Ст3\ ГОСТ\ 535-58}$ Channel	Швеллер стальной горячекатанный № 143 высокой прочности прокатки (А), марки Ст3сп, категории 2, L=0,670 м, шт. Steel hot-rolled channel, № 143 of high strength(A), Steel Ст3сп, category 2, L=0,670 m, pcs.	1	8,14	8,14
2	Круг $\frac{12-В-II}{Ст5\ псI-II}$ Round	Прокат горячекатанный круглый диаметром 12 мм обычной точности прокатки (В), II класса кривизны, марки Ст5пс, категории 1, группы II, L=0,510 м, шт. Hot-rolled round steel section, 12 mm in dia, of common precision (B), class of curvature II, Steel Ст5пс, category I, group II, L=0,510 m, pcs.	1	0,48	0,48
3	Гайка M12-6H.5(S18) Nut M12-6H.5(S18)	Шестигранные гайки класса точности В с диаметром резьбы 12 мм, с размером "под ключ" 18 мм, с крупным шагом резьбы с полем допуска 6Н, класса прочности 5, без покрытия, шт. Hexagon nuts with class of precision B, thread diameter 12 mm, for 18 mm range with large pitch of thread, accuracy allowance 6H, strength class 5 without coating, pcs.	2	0,016	0,032
4	Шайба 12 Washer 12	Шайба стальная для болта диаметром резьбы 12 мм, шт. Steel washer for bolt with thread diameter 12 mm, pcs.	2	0,005	0,01

СХЕМА РАСПОЛОЖЕНИЯ
KEY PLAN

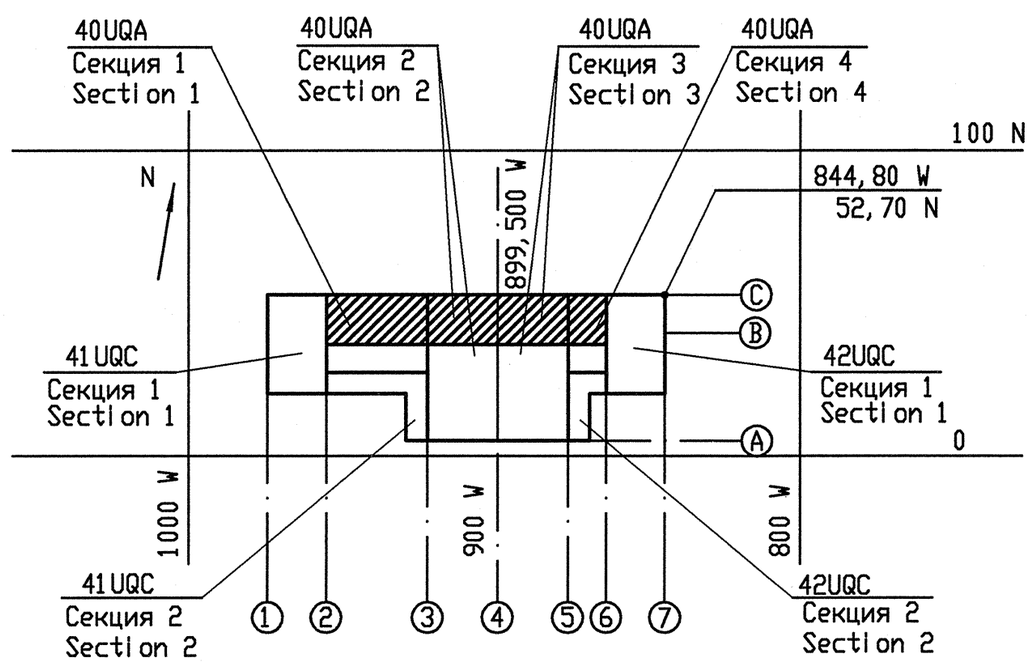

Package Number 3 9 6 105
File: R28 KK34 40UQA GML WK ОК WD001_009=0

Данный чертеж не подлежит размножению и передаче другим организациям и лицам без согласия ОА"ИНСТИТУТ ГИДРОПРОЕКТ"

This drawing is not to be reproduced or transferred to other organizations or private persons without approval of the JSC "INSTITUTE HYDROPROJECT"

Изм. Rev.	N уч. N pat.	Лист Sheet	N док. Docum N	Подпись Signat.	Дата Date
Утвердил Approved		Dudov			07.18
Н. контр. Inspector		Gorskaya			07.18
Разраб. Designed		Gorskaya			07.18

R28. KK34. 40UQA. GML. WK. ОК. WD001

АЭС "КУДАНКУЛАМ" БЛОК 4
NPP "KUDANKULAM" UNIT

40UQA
Система сбора и отвода промышленных стоков после автоматического пожаротушения. Дренаж 40UQA
System of collection and disposal of fire-fighting wastes. Drainage

Крепления трубопроводов 4GML10. Тип IV. Спецификация
Fixing of pipelines 4GML10. Type IV. Specification

Стадия Phase	Лист Sheet	Листов Sheets
WD	9	

ГИДРОПРОЕКТ HYDROPROJECT
JSC Institute Hydroproject MOSCOW 2018

формат А1

Orig. arch. Nr. 723727 | Date 07.08.20 | Replace arch. Nr.

Inv.Nr 28186 Date 13.08.2018

Тип I
Type I

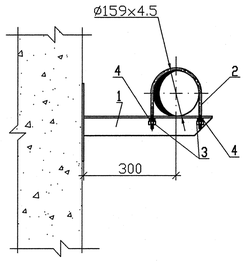

Тип II
Type II

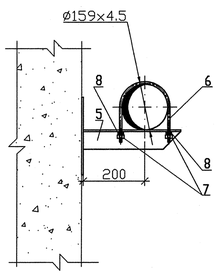

Тип III
Type III

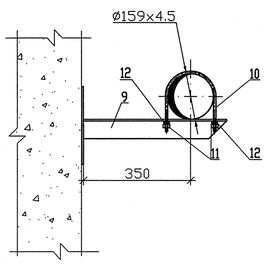

Ведомость деталей
List of parts

Таблица 1
Table 1

Поз. Item	Эскиз Sketch
1	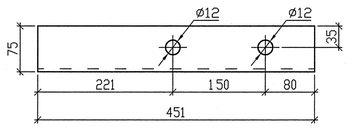
2	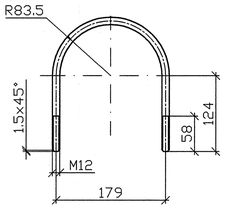 L разв.=510мм L development length=510mm
5	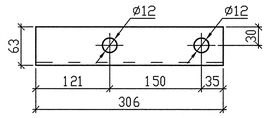
6	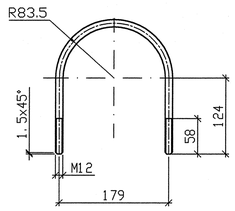 L разв.=510мм L development length=510mm
9	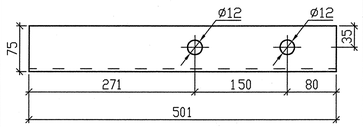
10	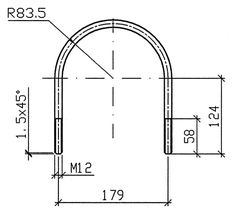 L разв.=510мм L development length=510mm

Спецификация
Specification

Таблица 2
Table 2

Поз. Items	Обозначение Designation	Наименование Name	Кол. Q-ty	Масса ед., кг Weight per unit, kg	Примеч. Note
		Тип I Type I	1	2,922	2,922
1	Уголок Angle 75x75x5-A / Ст3 пс2	Уголок стальной горячекатанный равнополочный размером 75x75x5мм высокой прочности прокатки (А), марки Ст3сп, категории 2, L=0,451 м, шт. Steel hot-rolled equal angle, 75x75x5mm in size, of high strength(A), Steel Ст3сп, category 2, L=0,451 m, pcs.	1	2,40	2,40
2	Круг Round 12-В-II / Ст5 пс1-II	Прокат горячекатанный круглый диаметром 12 мм обычной точности прокатки (В), II класса кривизны, марки Ст5пс, категории 1, группы II, L=0,510 м, шт. Hot-rolled round steel section, 12 mm in dia, of common precision (B), class of curvature II, Steel Ст5пс, category I, group II, L=0,510 m, pcs.	1	0,48	0,48
3	Гайка M12-6H.5(S18) Nut M12-6H.5(S18)	Шестигранные гайки класса точности В с диаметром резьбы 12 мм, с размером "под ключ" 18 мм, с крупным шагом резьбы с полем допуска 6Н, класса прочности 5, без покрытия, шт. Hexagon nuts with class of precision B, thread diameter 12 mm, for 18 mm range with large pitch of thread, accuracy allowance 6H, strength class 5 without coating, pcs.	2	0,016	0,032
4	Шайба 12 Washer 12	Шайба стальная для болта диаметром резьбы 12 мм, шт. Steel washer for bolt with thread diameter 12 mm, pcs.	2	0,005	0,01
		Тип II Type II	2	2,682	5,364
5	Уголок Angle 75x75x5-A / Ст3 пс2	Уголок стальной горячекатанный равнополочный размером 75x75x5мм высокой прочности прокатки (А), марки Ст3сп, категории 2, L=0,306 м, шт. Steel hot-rolled equal angle, 75x75x5mm in size, of high strength(A), Steel Ст3сп, category 2, L=0,306 m, pcs.	1	2,16	2,16
6	Круг Round 12-В-II / Ст5 пс1-II	Прокат горячекатанный круглый диаметром 12 мм обычной точности прокатки (В), II класса кривизны, марки Ст5пс, категории 1, группы II, L=0,510 м, шт. Hot-rolled round steel section, 12 mm in dia, of common precision (B), class of curvature II, Steel Ст5пс, category I, group II, L=0,510 m, pcs.	1	0,48	0,48
7	Гайка M12-6H.5(S18) Nut M12-6H.5(S18)	Шестигранные гайки класса точности В с диаметром резьбы 12 мм, с размером "под ключ" 18 мм, с крупным шагом резьбы с полем допуска 6Н, класса прочности 5, без покрытия, шт. Hexagon nuts with class of precision B, thread diameter 12 mm, for 18 mm range with large pitch of thread, accuracy allowance 6H, strength class 5 without coating, pcs.	2	0,016	0,032
8	Шайба 12 Washer 12	Шайба стальная для болта диаметром резьбы 12 мм, шт. Steel washer for bolt with thread diameter 12 mm, pcs.	2	0,005	0,01

Таблица 2(продолжение)
Table 2(continued)

Поз. Items	Обозначение Designation	Наименование Name	Кол. Q-ty	Масса ед., кг Weight per unit, kg	Примеч. Note
		Тип III Type III	1	2,922	2,922
9	Уголок Angle 75x75x5-A / Ст3 пс2	Уголок стальной горячекатанный равнополочный размером 75x75x5мм высокой прочности прокатки (А), марки Ст3сп, категории 2, L=0,501 м, шт. Steel hot-rolled equal angle, 75x75x5mm in size, of high strength(A), Steel Ст3сп, category 2, L=0,501 m, pcs.	1	2,40	2,40
10	Круг Round 12-В-II / Ст5 пс1-II	Прокат горячекатанный круглый диаметром 12 мм обычной точности прокатки (В), II класса кривизны, марки Ст5пс, категории 1, группы II, L=0,510 м, шт. Hot-rolled round steel section, 12 mm in dia, of common precision (B), class of curvature II, Steel Ст5пс, category I, group II, L=0,510 m, pcs.	1	0,48	0,48
11	Гайка M12-6H.5(S18) Nut M12-6H.5(S18)	Шестигранные гайки класса точности В с диаметром резьбы 12 мм, с размером "под ключ" 18 мм, с крупным шагом резьбы с полем допуска 6Н, класса прочности 5, без покрытия, шт. Hexagon nuts with class of precision B, thread diameter 12 mm, for 18 mm range with large pitch of thread, accuracy allowance 6H, strength class 5 without coating, pcs.	2	0,016	0,032
12	Шайба 12 Washer 12	Шайба стальная для болта диаметром резьбы 12 мм, шт. Steel washer for bolt with thread diameter 12 mm, pcs.	2	0,005	0,01

СХЕМА РАСПОЛОЖЕНИЯ
KEY PLAN

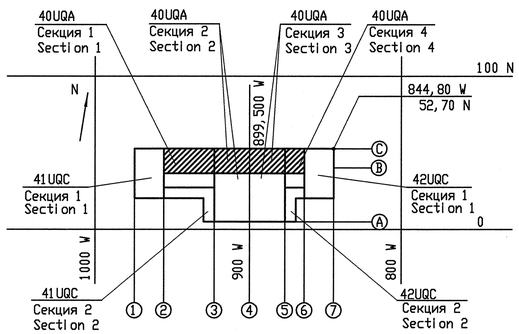

Package Number 3 9 6 105
File: R28 KK34 40UQA GML WK ПК WD001_010=0

Данный чертеж не подлежит размножению и передаче другим организациям и лицам без согласия ОА"ИНСТИТУТ ГИДРОПРОЕКТ"

This drawing is not to be reproduced or transferred to other organizations or private persons without approval of the JSC "INSTITUTE HYDROPROJECT"

Изм. Rev.	N уч. N pat.	Лист Sheet	N док. Docum N	Подпись Signat.	Дата Date
Утвердил Approved		Dudov			07.18
Н. контр. Inspector		Gorskaya			07.18
Разраб. Designed		Gorskaya			07.18

R28. KK34. 40UQA. GML. WK. ПК. WD001

АЭС "КУДАНКУЛАМ" БЛОК 4
NPP "KUDANKULAM" UNIT

40UQA
Система сбора и отвода промышленных стоков после автоматического пожаротушения. Дренаж
40UQA
System of collection and disposal of fire-fighting wastes. Drainage

Крепления трубопроводов 4GML20. Тип I...Тип III. Спецификация
Fixing of pipelines 4GML20. Type I...Type III. Specification

Стадия Phase	Лист Sheet	Листов Sheets
WD	10	

JSC Institute Hydroproject MOSCOW 2018

формат A1

Inv.Nr 28186 Date 13.08.2018

Orig. arch. №	Date	Replace arch. №
723727	07.2018	

Тип V
Type V

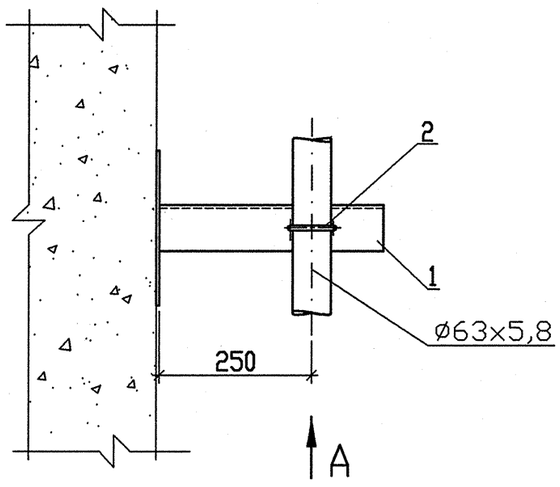

A

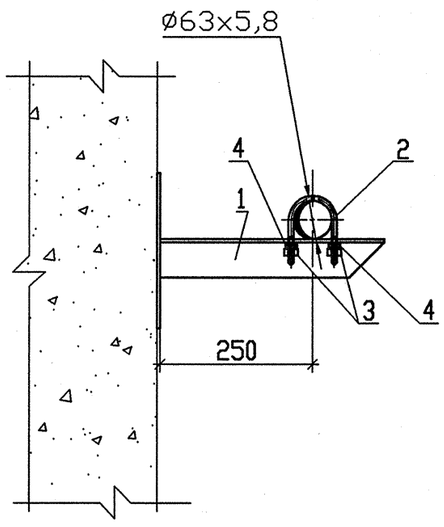

Спецификация
Specification

Таблица 2
Table 2

Поз. Items	Обозначение Designation	Наименование Name	Кол. Q-ty	Масса ед., кг Weight per unit, kg	Примеч. Note
		Тип V Type V	2	2,594	5,2
1	Уголок Angle 75x75x5-A / Ст3 пс2	Уголок стальной горячекатанный равнополочный размером 75x75x5мм высокой прочности прокатки (А), марки Ст3сп, категории 2, L=0,42 м, шт. Steel hot-rolled equal angle, 75x75x5mm in size, of high strength(A), Steel Ст3сп, category 2, L=0,42 m, pcs.	1	2,40	2,40
2	Круг Round 12-B-II / Ст5 псI-II	Прокат горячекатанный круглый диаметром 12 мм обычной точности прокатки (В), II класса кривизны, марки Ст5пс, категории 1, группы II, L=0,300 м, шт. Hot-rolled round steel section, 12 mm in dia, of common precision (B), class of curvature II, Steel Ст5пс, category I, group II, L=0,300 m, pcs.	1	0,18	0,18
3	Гайка M10-6H.5(S16) Nut M10-6H.5(S16)	Шестигранные гайки класса точности В с диаметром резьбы 10 мм, с размером "под ключ" 16 мм, с крупным шагом резьбы с полем допуска 6Н, класса прочности 5, без покрытия, шт. Hexagon nuts with class of precision B, thread diameter 10 mm, for 16 mm range with large pitch of thread, accuracy allowance 6H, strength class 5 without coating, pcs.	2	0,010	0,02
4	Шайба 10 Washer 10	Шайба стальная для болта диаметром резьбы 10 мм, шт. Steel washer for bolt with thread diameter 10 mm, pcs.	2	0,004	0,008

Ведомость деталей
List of parts

Таблица 1
Table 1

Поз. Item	Эскиз Sketch
1	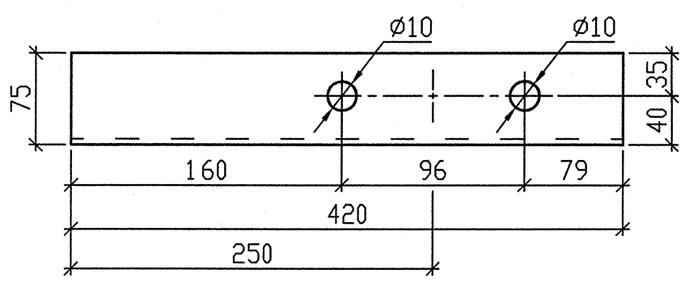
2	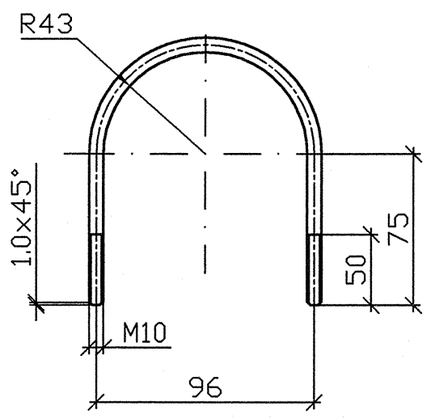 L разв.=300мм L development length=300mm

СХЕМА РАСПОЛОЖЕНИЯ
KEY PLAN

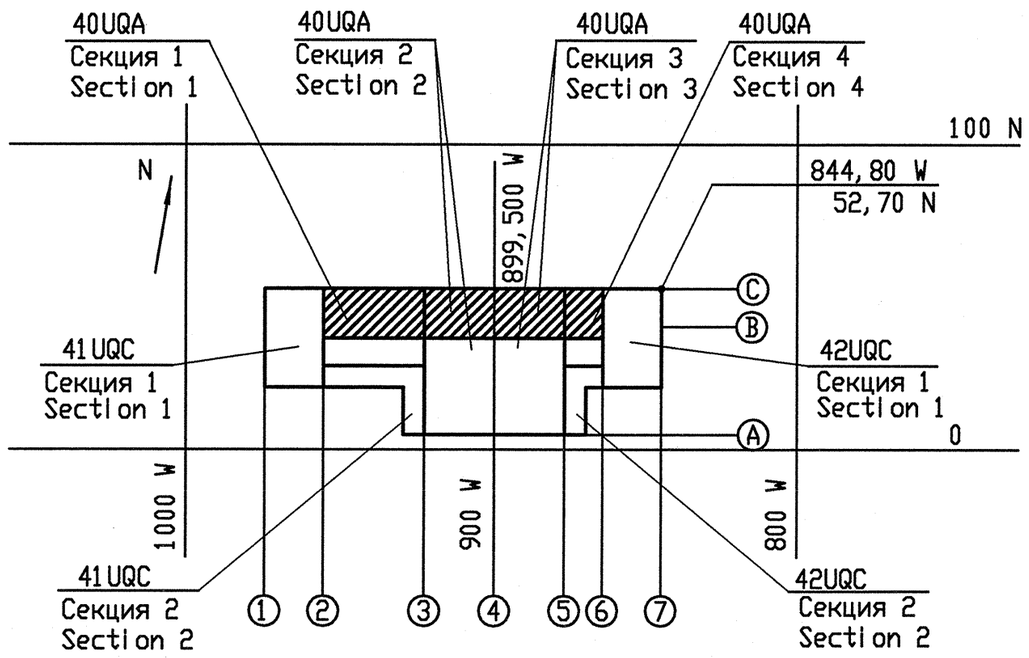

Package Number 3 9 6 105
File: R28 KK34 30UQA GML WK ПК WD001_011=0

Данный чертеж не подлежит размножению и передаче другим организациям и лицам без согласия ОА"ИНСТИТУТ ГИДРОПРОЕКТ"

This drawing is not to be reproduced or transferred to other organizations or private persons without approval of the JSC "INSTITUTE HYDROPROJECT"

Изм. Rev.	N уч. N pat.	Лист Sheet	N док. Docum N	Подпись Signat.	Дата Date
Утвердил Approved		Dudov			04.18
Н. контр. Inspector		Gorskaya			04.18
Разраб. Designed		Gorskaya			04.18

R28. KK34. 40UQA. GML. WK. ПК. WD001

АЭС "КУДАНКУЛАМ" БЛОК 4
NPP "KUDANKULAM" UNIT 4

40UQA
Система сбора и отвода промышленных стоков после автоматического пожаротушения. Дренаж
40UQA
System of collection and disposal of fire-fighting wastes. Drainage

Крепления трубопроводов 4GML30. Тип V. Спецификация
Fixing of pipelines 4GML30. Type V. Specification

Стадия Phase	Лист Sheet	Листов Sheets
WD	11	

ГИДРОПРОЕКТ HYDROPROJECT
JSC Institute Hydroproject
MOSCOW 2018

формат A1

Inv.Nr 28186 Date 13.08.2018
Replace arch. Nr
Date 04.2018
Orig. arch. Nr. 723727

Спецификация 4GML10
Specification 4GML10

Таблица 1
Table 1

Поз. Items	Обозначение Designation	Наименование Name	Кол. Q-ty	Масса ед. кг Weight per unit, kg	Масса общая, кг Weight total, kg
1	ГОСТ 27772-88 GOST TTC R01.KK34.0.0.KM.TS.P003	DN100-1 Трап стальной, шт. Cast iron trap, psc. 3GML10BB002	4	28,9	115,6
2	Dy=150x100mm ГОСТ 17376-2001 GOST	Тройник 159x4,5 - 108x4, шт. T-piece, pcs.	1	4,8	4,8
3	Dy=150mm ГОСТ 10704 91 GOST	Труба стальная электросварная D159x4,5 категория качества А, м. Electrically welded steel pipe D159x4,5 Quality A category, m.	63	17,8	1121,4
4	Dy=100mm ГОСТ 17375-2001 GOST	Отвод 90-108x4-09Г2С, шт. Branch pipe, pcs.	1	2,5	2,5
5	Dy=150mm ГОСТ 17375-2001 GOST	Отвод 90-159x5-09Г2С, шт. Branch pipe, pcs.	2	6,1	12,2
6	Dy=150mm ГОСТ 17376-2001 GOST	Тройник 159x4,5, шт. T-piece, pcs.	5	16	80
7	Dy=150x100mm ГОСТ 17378-2001 GOST	Переход К-159x4,5-108x4, шт. Reducer, pcs.	1	3,9	3,9

Спецификация 4GML20
Specification 4GML20

Таблица 2
Table 2

Поз. Items	Обозначение Designation	Наименование Name	Кол. Q-ty	Масса ед. кг Weight per unit, kg	Масса общая, кг Weight total, kg
8	4GML21AP001 4GML22AP001 R01.KK34.UQA.GML.TW. TS.P001	Переносной центробежный погружной электронасос, производительностью 100 куб. м/ч, напором 25 метров с эл.дв.мощ. 15 кВт, к-т Portable centrifugal submersible electrical pump, 100 cu.m/h capacity, 25 m head with 15 kW el. motor, set.	2		
9*		Датчик уровня тип , шт. Level switch Type , pcs.	4	—	—
10	DN=150mm Py=1,6 MPa CN-01-16-150Ф-1-АМ 4GML21AA001 4GML22AA001 TTC R01.KK34.0.0.TW.TS.P001	Задвижка стальная сварная клиновая с выдвижным шпинделем, фланцевая, комплектно с ответными фланцами, крепежом и прокладками в тропическом исполнении, шт. Steel welded wedged gate valve with telescopic spindle, flange connected, complete with companion flanges, fastenings and gaskets of tropical make, pcs.	2	119	238
11	ASME B16.34-2004 ASME B16.5-2004 Класс 150 4GML21AA601 4GML22AA601	Поворотный обратный клапан фланцевый DN=150mm Py=1,6 MPa комплектно с ответными фланцами, шт.	2	32	64
12	ASME B16.34-2004 4GML22AA002	Игольчатый вентиль DN=15mm Py=1,6 MPa	1	0,7	0,7
13	11Б38бк (11Б18бк) Py=1,6 MPa DN=15mm	Кран трехходовой натяжной муфтовый с фланцем для контрольного манометра, шт. Three way cock, couple joined non-gland flanged for test pressure gauge, pcs.	2	0,4	0,8
14	P=0,4 MPa 4GML21CP001 4GML22CP001 TTC R01.KK34.0.0.TW.TS.P004	Манометр показывающий на морской воде, к-т. Pressure gauge for sea water, set.	2	0,85	1,7
15	Dy=15mm ГОСТ 3262-75 GOST	Труба стальная водогазопроводная, м Water-gas steel pipe, m	3	1,10	3,3
16	Dy=150mm ГОСТ 10704 91 GOST	Труба стальная электросварная D159x4,5 категория качества А, м. Electrically welded steel pipe D159x4,5 Quality A category, m.	37	17,8	658,6

Таблица 2 (продолжение)
Table 2 (continued)

Поз. Items	Обозначение Designation	Наименование Name	Кол. Q-ty	Масса ед. кг Weight per unit, kg	Масса общая, кг Weight total, kg
17	Dy=150mm ГОСТ 17375-2001 GOST	Отвод 90-159x5-09Г2С, шт. Branch pipe, pcs.	9	6,5	58,5
18	Dy=15 mm ГОСТ 8946-75 GOST	Угольник из ковкого чугуна с цилиндрической резьбой, шт. Angle of maleable cast iron with cylindrical thread, pcs.	2	0,094	0,188
19	Dy=150mm ГОСТ 17376-2001 GOST	Тройник 159x4,5, шт. T-piece, pcs.	1	9,4	9,4
20	Dy=150x100mm ГОСТ 17378-2001 GOST	Переход К-159x4,5-108x4, шт. Reducer, pcs.	2	3,9	7,8

Спецификация 4GML30
Specification 4GML30

Таблица 3
Table 3

Поз. Items	Обозначение Designation	Наименование Name	Кол. Q-ty	Масса ед. кг Weight per unit, kg	Масса общая, кг Weight total, kg
21	4GML31AP001 4GML32AP001 R01.KK34.UQA.GML.TW. TS.P002	Центробежный самовсасывающий насос с электродвигателем N=1,5 кВт n=3000 об/мин, напряжение 380 В (по заказу потребителя 220В) частота тока-50 Гц, к-т. Centrifugal self-priming pump ЦНС-6,3/20 with electric motor of tropical make N=1,5 kW, n=3000 rpm, 380 V, (220V on request of the user), 50 Hz, set.	2		
22	R28.KK.UQA.PCB. TW.TT.WD001 ТУ 3741-056-34390194-2004 4GML31AA108 4GML32AA108	Затвор дисковый, шт Butterfly valve, pcs ЦКБ П99199-080 Py=1,0 MPa DN=80mm	2	—	—
23	ASME B16.34-2004 Py=1,0 MPa DN=80mm 4GML31AA601 4GML32AA601	Поворотный обратный клапан, шт с ответными фланцами согласно B16.5, Класс 150 Swing check valve, pcs with companion flanges as per B16.5, Class 150	2	—	—
24	ASME B16.34-2004 4GML31AA002 TTC I02.KK34.0.0.TH.TS.PR00X	Игольчатый вентиль DN=15mm Needle valve Py=1,6 MPa	1	0,7	0,7
25	Py=1,6 MPa DN=15mm 4GML31AA301 4GML32AA301	Шаровой кран с фланцем для контрольного манометра, шт Ball valve with flange for test pressure gauge, pcs	2	0,4	0,8
26	P=0,6 MPa 4GML31CP501 4GML32CP501 TTC R01.KK34.0.0.TW.TS.P004	Манометр показывающий на морской воде, к-т. Pressure gauge for sea water, set.	2	0,85	1,7
27	Dy=15mm ГОСТ 3262-75 GOST	Труба стальная водогазопроводная, м Water-gas steel pipe, m	2	1,10	2,2
28	Dy= mm ГОСТ GOST	Нагнетательный трубопровод , м. Discharge line , m.			
29	Dy=50mm ГОСТ 18599-2001 GOST	Труба напорная из полиэтилена, м Polyethylene pressure pipes, m PE63 SDR11 DN63	19	1,06	20,14
30	Dy=63mm	Отвод 90°, шт Branch pipe, pcs. PE100 SDR11 DN63	5	17,5	87,5
31	Dy= mm ГОСТ 30753-2001 GOST	Отвод , шт. Branch pipe, pcs.			
32	Dy=15 mm ГОСТ 8946-75 GOST	Угольник из ковкого чугуна с цилиндрической резьбой, шт. Angle of maleable cast iron with cylindrical thread, pcs.	3	0,094	0,282

* - 2 датчика для 4GML20, 2 датчика для 4GML30
* - 2 switches for 4GML20, 2 switches for 4GML30

Таблица 3 (продолжение)
Table 3 (continued)

Поз. Items	Обозначение Designation	Наименование Name	Кол. Q-ty	Масса ед. кг Weight per unit, kg	Масса общая, кг Weight total, kg
33	Dy=63mm	Тройник 90° 63x63 PE100 SDR11 T-piece 90°, pcs	1	—	—
34	Dy=15 mm ГОСТ 8948-75 GOST	Тройник из ковкого чугуна с цилиндрической резьбой, шт. T-piece of maleable cast iron with cylindrical thread, pcs.	1	0,133	0,133
35		Переход редукционный, шт Reducer long, pcs Dy=63x90mm PE100 SDR11	6	—	—
36		Стальной фланец под втулку, шт Flanges steel for flanges adapter, pcs Dy=90mm	10	—	—
37		Втулка под фланец, шт Flange adaptor, pcs Dy=63mm PE100 SDR11	2	0,257	0,514
38	ГОСТ GOST	Фланец , шт Flange , pcs	2	2,54	5,08
39	ГОСТ 12820-80 GOST	Фланец 1-150-16 ст. 25 , шт Flange, pcs	2	7,81	15,62
40	ГОСТ 19903-74 GOST	Заглушка из листовой стали Ø260, b=25мм, шт. Steel blind flange, pcs.	2	10,40	20,8
41	ГОСТ 7798-70 GOST	Болт M16-6gx80.58 (S24), шт. Bolt M16, pcs.	16	0.161	2,576
42	ГОСТ 5915-70 GOST	Гайка M16-6H.5 (S24), шт. Nut M16, pcs.	16	0,037	0,592
43	ГОСТ 11371-78 GOST	Шайба 16.01.08кп.016, шт. Washer, pcs	16	0,01	0,16
44	Dy=100mm ГОСТ 10704-91 GOST	Труба стальная электросварная D100x4, м. Electrically welded steel pipe D100x4, m.	2	10.,26	20.52
45		Ниппель M32, шт. Nippel M32 made of round steel Ø65mm length 61mm, pcs.	4	2	8
46		Бобышка из круга Ø 50 с внутренней резьбой M32, шт. Boss made of round steel Ø 50mm with inner thread M32, pcs.	4	0,8	3,2
47	ГОСТ 19903-74 GOST	Заглушка из листовой стали Ø205, b=11мм, шт. Steel blind flange, pcs.	4	2,85	11,4
48	ГОСТ 7798-70 GOST	Болт M16-6gx70.58 (S24), шт. Bolt M16, pcs.	32	0,145	4,64
49	ГОСТ 5915-70 GOST	Гайка M16-6H.5 (S24), шт. Nut M16, pcs.	32	0,037	1,18
50		Прокладка DN100, δ=3мм, шт. Gasket DN100, pcs.	4	0,06	0,24
51		Сальник Ø34/Ø15, δ=25мм, шт. Gland Ø34/Ø15, pcs	4	0,02	0,08
52	ГОСТ GOST	Фундаментный болт , шт. Foundation bolt , шт.			
53	ГОСТ GOST	Гайка , шт. Nut , pcs.			
54	ГОСТ 12820-80 GOST	Фланец 1-100-16 ст. 25, шт Flange, pcs	10	2,14	21,4

Таблица 3 (продолжение)
Table 3 (continued)

Поз. Items	Обозначение Designation	Наименование Name	Кол. Q-ty	Масса ед. кг Weight per unit, kg	Масса общая, кг Weight total, kg
55	ТУ 3741-058-34390194-2004 Титановый сплав 4GML31AA201	Затвор дисковый регулирующий с ручным приводом для морской воды, шт. Py=1,0 MPa DN=80mm Control Butterfly valve hand-operated, designed for sea water, pcs	2	—	—
56		Тройник 90° 63x32 PE100 SDR11 T-piece 90°, pcs	1	—	—
57		Отвод 90°, шт Pipe-bend 90°, pcs PE100 SDR11 DN32.	1	—	—
58		Переход редукционный, шт Reducer long, pcs Dy=32x20mm PE100 SDR11	1	—	—
59		Переход 20 П3-сталь с наружной резьбой, шт Transition long 20 male-thread-con	1	—	—

СХЕМА РАСПОЛОЖЕНИЯ
KEY PLAN

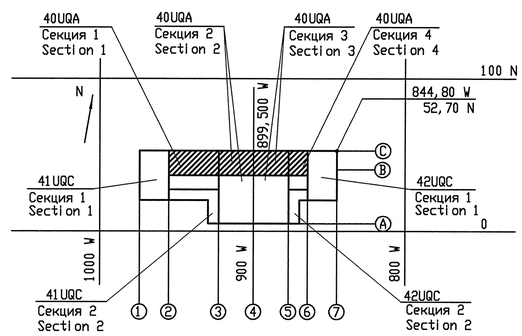

Package Number 3 9 6 105
File: R28 KK34 40UQA GML WK DK WD001_012=0

Данный чертеж не подлежит размножению и передаче другим организациям и лицам без согласия ОА"ИНСТИТУТ ГИДРОПРОЕКТ"

This drawing is not to be reproduced or transferred to other organizations or private persons without approval of the JSC "INSTITUTE HYDROPROJECT"

Изм. Rev.	N уч. N pat.	Лист Sheet	N док. Docum N	Подпись Signat.	Дата Date
Утвердил Approved		Dudov			07.18
Н. контр. Inspector		Garskaya			07.18
Разраб. Designed		Garskaya			07.18

R28. KK34. 40UQA. GML. WK. DK. WD001

АЭС "КУДАНКУЛАМ" БЛОК 4
NPP "KUDANKULAM" UNIT 4

40UQA
Система сбора и отвода промышленных стоков после автоматического пожаротушения. Дренаж
40UQA
System of collection and disposal of fire-fighting wastes. Drainage

Спецификация
Specification

Стадия Phase	Лист Sheet	Листов Sheets
WD	12	

ГИДРОПРОЕКТ HYDROPROJECT
JSC Institute Hydroproject MOSCOW 2018

формат A1

Inv.Nr 28186 Date 13.08.2018

Orig. arch. Nr.	Date	Replace arch. Nr
723727	07.2018	

ВЕДОМОСТЬ РАБОЧИХ ЧЕРТЕЖЕЙ ОСНОВНОГО КОМПЛЕКТА
LIST OF THE WORKING DRAWINGS OF MAIN SET

Лист Sheet	Наименование Description	Примечание Note
1	Общие данные General data	
2	Схема принципиальная Schematic diagram	
3	План разбивки трубопроводов 30PUQ10BR001, 30PUQ10BR002, 30PUQ20BR001, 30PUQ20BR002 на блоки, разрезы 1–1...4–4 Block division plan of pipelines 30PUQ10BR001, 30PUQ10BR002, 30PUQ20BR001, 30PUQ20BR002, sections 1–1...4–4	
4	Спецификация блоков трубороводов 30PUQ10BR001, 30PUQ10BR002, 30PUQ20BR001, 30PUQ20BR002 Blocks specification of pipelines 30PUQ10BR001, 30PUQ10BR002, 30PUQ20BR001, 30PUQ20BR002	
5	План расстановки опор на трубопроводах 30PUQ10BR001, 30PUQ20BR001, ведомость опор трубопроводов 30PUQ10BR001, 30PUQ20BR001 Layout of supports on the pipelines 30PUQ10BR001, 30PUQ20BR001, list of pipelines supports 30PUQ10BR001, 30PUQ20BR001	
6	План разбивки трубопроводов 30PUQ10(20)BR003, 30PUQ10(20)BR004, 30PUQ10(20)BR005, 30PUQ10(20)BR006 на блоки, разрез 1–1, узлы 1, 2 Block division plan of pipelines 30PUQ10(20)BR003, 30PUQ10(20)BR004, 30PUQ10(20)BR005, 30PUQ10(20)BR006 section 1–1, units 1, 2	
7	Разрезы 2–2, 3–3 Sections 2–2, 3–3	
8	Разрезы 4–4...15–15, узлы 3...6 Sections 4–4...15–15, units 3...6	
9	Спецификация блоков трубопроводов 30PUQ10BR003, 30PUQ10BR004, 30PUQ20BR003, 30PUQ20BR004 Specification of pipelines blocks 30PUQ10BR003, 30PUQ10BR004, 30PUQ20BR003, 30PUQ20BR004	
10	Принципиальная схема трубопроводов 30PUQ10BR005, BR006, разрез 10–10, узел 7, спецификация трубопроводов 30PUQ10BR005, BR006 Schematik diagram of pipelines 30PUQ10BR005, BR006, section 10–10, unit 7, specification of pipelines 30PUQ10BR005, BR006	
11	Принципиальная схема трубопроводов 30PUQ20BR005, BR006, узлы 8, 9, спецификация трубопроводов 30PUQ20BR005, BR006 Schematik diagram of pipelines 30PUQ20BR005, BR006, units 8, 9, specification of pipelines 30PUQ20BR005, BR006	
12	Блоки 30PUQ10BR001MR001, 003, 005, 007, 011, 012 Blocks 30PUQ10BR001MR001, 003, 005, 007, 011, 012	
13	Блок 30PUQ10BR001MR002 Block 30PUQ10BR001MR002	
14	Блок 30PUQ10BR001MR004 Block 30PUQ10BR001MR004	
15	Блок 30PUQ10BR001MR006 Block 30PUQ10BR001MR006	
16	Блоки 30PUQ10BR001MR008, 009 Blocks 30PUQ10BR001MR008, 009	
17	Блоки 30PUQ10BR001MR010 Blocks 30PUQ10BR001MR010	
18	Блок 30PUQ10BR001MR013 Block 30PUQ10BR001MR013	
19	Блок 30PUQ10BR001MR015 Block 30PUQ10BR001MR015	
20	Блок 30PUQ10BR001MR016 Block 30PUQ10BR001MR016	
21	Блок 30PUQ10BR002MR018 Block 30PUQ10BR002MR018	
22	Блоки 30PUQ20BR001MR019, 020, 025, 028, 030, 031 Blocks 30PUQ20BR001MR019, 020, 025, 028, 030, 031	
23	Блоки 30PUQ20BR001MR021, 022, 023 Blocks 30PUQ20BR001MR021, 022, 023	
24	Блок 30PUQ20BR001MR024 Block 30PUQ20BR001MR024	
25	Блок 30PUQ20BR001MR027 Block 30PUQ20BR001MR027	
26	Блок 30PUQ20BR001MR029 Block 30PUQ20BR001MR029	
27	Блок 30PUQ20BR001MR032 Block 30PUQ20BR001MR032	
28	Блок 30PUQ20BR001MR033 Block 30PUQ20BR001MR033	

Лист Sheet	Наименование Description	Примечание Note
29	Блок 30PUQ20BR002MR035 Block 30PUQ20BR002MR035	
30	Блок 30PUQ10BR003MR001 Block 30PUQ10BR003MR001	
31	Блоки 30PUQ10BR003MR002, 004, 008, 012, 014, 018, 020, 022, 024 Blocks 30PUQ10BR003MR002, 004, 008, 012, 014, 018, 020, 022, 024	
32	Блок 30PUQ10BR003MR003 Block 30PUQ10BR003MR003	
33	Блоки 30PUQ10BR003MR005, 007, 009 Blocks 30PUQ10BR003MR005, 007, 009	
34	Блок 30PUQ10BR003MR011 Block 30PUQ10BR003MR011	
35	Блок 30PUQ10BR003MR013 Block 30PUQ10BR003MR013	
36	Блоки 30PUQ10BR003MR015, 016 Blocks 30PUQ10BR003MR015, 016	
37	Блок 30PUQ10BR003MR017 Block 30PUQ10BR003MR017	
38	Блок 30PUQ10BR003MR019 Block 30PUQ10BR003MR019	
39	Блок 30PUQ10BR003MR021 Block 30PUQ10BR003MR021	
40	Блок 30PUQ10BR003MR023 Block 30PUQ10BR003MR023	
41	Блок 30PUQ10BR003MR025 Block 30PUQ10BR003MR025	
42	Блок 30PUQ10BR004MR026 Block 30PUQ10BR004MR026	
43	Блоки 30PUQ10BR004MR027, 033, 035, 039, 041, 043, 045 Blocks 30PUQ10BR004MR027, 033, 035, 039, 041, 043, 045	
44	Блок 30PUQ10BR004MR028 Block 30PUQ10BR004MR028	
45	Блок 30PUQ10BR004MR030 Block 30PUQ10BR004MR030	
46	Блок 30PUQ10BR004MR032 Block 30PUQ10BR004MR032	
47	Блок 30PUQ10BR004MR034 Block 30PUQ10BR004MR034	
48	Блоки 30PUQ10BR004MR036, 037 Blocks 30PUQ10BR004MR036, 037	
49	Блок 30PUQ10BR004MR038 Block 30PUQ10BR004MR038	
50	Блок 30PUQ10BR004MR040 Block 30PUQ10BR004MR040	
51	Блок 30PUQ10BR004MR042 Block 30PUQ10BR004MR042	
52	Блок 30PUQ10BR004MR044 Block 30PUQ10BR004MR044	
53	Блок 30PUQ10BR004MR046 Block 30PUQ10BR004MR046	
54	Блок 30PUQ20BR003MR047 Block 30PUQ20BR003MR047	
55	Блоки 30PUQ20BR003MR048, 050, 054, 058, 061, 063, 065, 067 Blocks 30PUQ20BR003MR048, 050, 054, 058, 061, 063, 065, 067	
56	Блок 30PUQ20BR003MR049 Block 30PUQ20BR003MR049	
57	Блоки 30PUQ20BR003MR051, 055 Blocks 30PUQ20BR003MR051, 055	
58	Блоки 30PUQ20BR003MR053, 057 Blocks 30PUQ20BR003MR053, 057	
59	Блок 30PUQ20BR003MR059 Block 30PUQ20BR003MR059	

Лист Sheet	Наименование Description	Примечание Note
60	Блок 30PUQ20BR003MR060 Block 30PUQ20BR003MR060	
61	Блок 30PUQ20BR003MR062 Block 30PUQ20BR003MR062	
62	Блок 30PUQ20BR003MR064 Block 30PUQ20BR003MR064	
63	Блок 30PUQ20BR003MR066 Block 30PUQ20BR003MR066	
64	Блок 30PUQ20BR003MR068 Block 30PUQ20BR003MR068	
65	Блок 30PUQ20BR004MR069 Block 30PUQ20BR004MR069	
66	Блоки 30PUQ20BR004MR071, 073 Blocks 30PUQ20BR004MR071, 073	
67	Блоки 30PUQ20BR004MR072, 076, 078, 080, 082, 084 Blocks 30PUQ20BR004MR072, 076, 078, 080, 082, 084	
68	Блок 30PUQ20BR004MR075 Block 30PUQ20BR004MR075	
69	Блок 30PUQ20BR004MR077 Block 30PUQ20BR004MR077	
70	Блок 30PUQ20BR004MR079 Block 30PUQ20BR004MR079	
71	Блок 30PUQ20BR004MR081 Block 30PUQ20BR004MR081	
72	Блок 30PUQ20BR004MR083 Block 30PUQ20BR004MR083	
73	Блок 30PUQ20BR004MR085 Block 30PUQ80BR004MR085	
74	Установка опор трубопроводов Installation of pipelines supports	
75	План на отм. –0,700, разрезы 1–1...4–4, узел A, спецификация Plan at elev. –0,700, section 1–1...4–4, unit A, specification	

ВЕДОМОСТЬ ССЫЛОЧНЫХ И ПРИЛАГАЕМЫХ ДОКУМЕНТОВ
LIST OF REFERENCE AND ATTACHED DOCUMENTS

Обозначение Designation	Наименование Name	Примечание Note
	Ссылочные документы Reference documents	
R37.KK34.31UQZ.PEB.TW.OK.WD001	31UQZ. Металлические конструкции трубопроводов ответственных потребителей 31UQZ. Metalwork Pipelines of essential services	
R37.KK34.31UQZ.0.KZ.OK.WD001	31UQZ. Строительные конструкции. Геометрия 31UQZ. Structures. Geometry	
R37.KK34.31UUQ.0.AR.OK.WD001	Вентцентры туннелей трубопроводов ответственных потребителей. 31–37 UUQ. Архитектурные решения Vent centers of Tunnels of pipelines essential consumers. 31–37 UUQ. Architectural solutions	
R28.KK34.34UQX.0.KZ.OK.WD001	34UQX. Строительные конструкции. Геометрия 34UQX. Structures. Geometry	

ВЕДОМОСТЬ СПЕЦИФИКАЦИЙ
SPECIFICATION LIST

Лист Sheet	Наименование Description	Примечание Note
4	Спецификация блоков трубопроводов 30PUQ10BR001, 30PUQ10BR002, 30PUQ20BR001, 30PUQ20BR002 Blocks specification of pipelines 30PUQ10BR001, 30PUQ10BR002, 30PUQ20BR001, 30PUQ20BR002	
9	Спецификация блоков трубопроводов 30PUQ10BR003, 30PUQ10BR004, 30PUQ20BR003, 30PUQ20BR004 Blocks specification of pipelines 30PUQ10BR003, 30PUQ10BR004, 30PUQ20BR003, 30PUQ20BR004	
10	Спецификация блоков трубопроводов 30PUQ10BR005, 30PUQ10BR006 Blocks specification of pipelines 30PUQ10BR005, 30PUQ10BR006	
11	Спецификация блоков трубопроводов 30PUQ20BR005, 30PUQ20BR006 Blocks specification of pipelines 30PUQ20BR005, 30PUQ20BR006	

ТЕХНИЧЕСКАЯ ХАРАКТЕРИСТИКА И СВОДКА МАСС ТРУБОПРОВОДОВ
PERFORMANCE AND WEIGHT DATA OF PIPELINES

Обозначение трубопровода / Pipeline designation	Наименование транспортируемого продукта / Description of transported matter	Подведомственность / Subject to	Рабочие условия трубопровода / Pipeline operating conditions: Давление, МПа / Pressure, MPa	Температура, °С / Temperature, °С	Условия гидроиспытаний / Hydraulic test conditions: Давление, МПа / Pressure, MPa	Минимальная температура стенки, °С / Minimal temperature of pipe wall, °С	Диаметр и толщина стенки трубопровода Dxs, мм / Diameter and thickness of pipe wall Dxs, mm	Масса трубопроводов, кг / Pipeline weight, kg: Общая / Total	В том числе / Including: Трубопровода / Pipeline weight	Опор / Support weight	Арматуры / Reinforcement weight
30PUQ10BR001	Морская вода Sea water	ПНАЭ Г-7-008-89 PNAE G-7-008-89	0,6	32	1,0	19	219,1x7,04	2219,0	2177,6	41,4	*
30PUQ10BR002			0,3	38	0,6			26,9	26,9	–	*
30PUQ20BR001			0,6	32	1,0			2378,7	2331,4	47,3	*
30PUQ20BR002			0,3	38	0,6			26,9	26,9	–	*
30PUQ10BR003		ПНАЭ Г-7-008-89 PNAE G-7-008-89	0,3	38	0,6	19	89x3	111,8	110,7	1,1	*
30PUQ10BR004								105,9	104,8	1,1	*
30PUQ20BR003								75,3	73,2	2,1	*
30PUQ20BR004								66,3	64,2	2,1	*
30PUQ10BR005		ПНАЭ Г-7-008-89 PNAE G-7-008-89	0,3	38	0,6	19	180x16,4	198,5	194,4	4,1	*
30PUQ10BR006								190,1	186,0	4,1	*
30PUQ20BR005								135,3	131,2	4,1	*
30PUQ20BR006								131,3	127,2	4,1	*

* Вес арматуры уточняется при выборе поставщика.
* The weight of reinforcement is specified when selecting a supplier.

МЕТОДЫ И ОБЪЕМЫ КОНТРОЛЯ СВАРНЫХ СОЕДИНЕНИЙ
METHODS AND DEGREE OF INSPECTION OF WELDED JOINTS

Номер трубопровода Pipeline number	Категория сварных соединений или категория трубопровода / Category of welded joints or category of pipeline	Номинальная толщина свариваемых деталей, мм / Nominal thickness of welded parts, mm	Объем контроля / Degree of inspection — Неразрушающего, % / Non-destructive, %: Визуального и измерительного / Visual and measuring inspection	Гидравлические испытания / Hydraulic test	Капилярного или магнитопорошкового / Capillary or magnetic particle inspection	Радиографического / Radiographic inspection	Ультразвукового / Ultrasonic inspection	Прогонка металлическим калибром / Run with metal pass	Контроль герметичности / Leakproofness test	Разрушающего / Destructive: Определение механических свойств / Determination of stress-strain properties	Металлографические исследования / Metallographic examination	Испытания на стойкость к межкристаллитной коррозии / Intercrystalline corrosion proofness test
30PUQ10BR003	IIв	3	100	100	100	50	50	–	–	–	–	–
30PUQ10BR004												
30PUQ20BR003												
30PUQ20BR004												

ХИМИЧЕСКИЙ СОСТАВ МОРСКОЙ ВОДЫ
CHEMICAL COMPOSITION OF SEA WATER

	Название Element	Величина Valne	Примечание Note
1	Кальций, мг/л Calcium, mg/l	360...420	
2	Магний, мг/л Magnesium, mg/l	1248...1322	
3	Натрий, мг/л Sodium, mg/l	7500...8500	
4	Калий, мг/л Potassium, mg/l	390...415	
5	Гидрокарбонаты, мг/л Hydrocarbonates, mg/l	73,2...109,8	
6	Карбонаты, мг/л Carbonates, mg/l	67,2...76,8	
7	Сульфаты, мг/л Sulphates, mg/l	2709...2761	
8	Хлориды, мг/л Chlorides, mg/l	19500	
9	Общее содержание, % General salt content, %	3,6000	
10	Жесткость (CaC_3), мг/л	6500	
11	Водородный показатель pH pH value	8	
12	Нерастворимые вещества, мг/л Insaluble matters, mg/l	20	
13	Биологические данные, мг/100 $м^3$ Biological assay data, mg/100 m^3	70	

УСЛОВНЫЕ ОБОЗНАЧЕНИЯ
LEGEND

Обозначение	Описание
	Граница проектирования Design boundary
	Переход Adapter
	Спуск воды из трубопровода Water discharge from pipeline
	Соединение трубопроводов Connection of pipeline
	Соединение трубопроводов отсутствует No connection of pipeline
5	Порядковый номер скользящей опоры Sequence number of sliding support
1	Порядковый номер неподвижной опоры Sequence number of fixed support
105	Порядковый номер блока трубопровода Sequence number of pipeline block
	Направление движения среды Medium motion direction
	Рукав напорный Delivery hose
	Игольчатый вентиль Needle valve
	Двустворчатый клапан Butterfly valve
	Затвор обратный Check valve
	Граница блока Limit of block
	Точка контроля и обозначение измеряемого параметра Check point and designation of the parameter to be measured

ОБЩИЕ УКАЗАНИЯ

1 Рабочие чертежи разработаны в соответствии с контрактом No77–258/1415800 на разработку рабочей документации.

2 Рабочая документация разработана в соответствии с Российскими нормативными документами, действующими на 15.05.2009.

3 Классификация элементов трубопроводов:

трубопроводы опорожнения PEB (ø219,1x7,04):
– класс безопасности 2 по НП–001–97 (ПНАЭ Г–01–011–97) "Общие положения обеспечения безопасности атомных станций." ОПБ–88/97;
– группа В по ПНАЭ Г–7–008–89 "Правила устройства и безопасной эксплуатации оборудования и трубопроводов атомных энергетических установок";
– категория сейсмостойкости I по НП–031–01 "Нормы проектирования сейсмостойких атомных станций";

трубопроводы дренажа туннелей (ø89x3):
– класс безопасности 3 по НП–001–97 (ПНАЭ Г–01–011–97) "Общие положения обеспечения безопасности атомных станций." ОПБ–88/97;
– группа С, категория V по СН 527–80 "Инструкция по проектированию технологических стальных трубопроводов Ру до 10 МПа";
– категория сейсмостойкости I по НП–031–01 "Нормы проектирования сейсмостойких атомных станций";

трубопроводы осушения туннелей (ø180x16,4):
– класс безопасности 4 по НП–001–97 (ПНАЭ Г–01–011–97) "Общие положения обеспечения безопасности атомных станций." ОПБ–88/97;
– категория сейсмостойкости II по НП–031–01 "Нормы проектирования сейсмостойких атомных станций";

4 Толщина труб принята по расчету на внутреннее давление воды с учетом увеличения толщины стенки труб на величину коррозии стенок труб в течении всего периода эксплуатации.

5 Опорожнение трубопроводов PEB предусматривается через дренажные узлы, которые устанавливаются в нижних точках трубопроводов со сбросом воды в специально предусмотренные дренажные приямки в туннелях UQZ.

Диаметр дренажных узлов принят из условия самотечного опорожнения трубопроводов в течение двух часов.

Трубопроводы опорожнения PEB прокладываются в туннелях 31UQZ с уклоном в сторону слива воды в приямки. Величина уклона трубопроводов определяется величиной уклона дна туннелей.

6 Дренаж туннелей и сброс воды при опорожнении трубопроводов PEB в сифонный колодец 34UQX осуществляется артезианскими насосами, всасывающие патрубки которых находятся в дренажных приямках.

7 Осушение туннелей в случае разрыва трубопровода предусматривается переносными погружными насосами со сбросом откачиваемой воды в отводящий канал 32UQN.

8 Трубопроводы дренажа и трубопроводы осушения туннелей прокладываются в помещении 31UUQ, в земле и по территории сифонного колодца 34UQX.

9 Компенсация температурных удлинений осуществляется за счет естественных углов поворота трассы трубопроводов.

Все усилия и моменты, возникающие от сочетания действующих нагрузок (осевых, боковых и весовых), воспринимаются неподвижными опорами.

10 Монтаж трубопроводов опорожнения PEB осуществляется из блоков с фланцевыми соединениями. Трубопроводы изготавливаются из углеродистой стали по ASME–SA–106 Gr.B. Фитинги и фланцы изготавливаются из углеродистой стали по ASME–SA–105.

Монтаж трубопроводов дренажа туннелей и трубопроводов осушения туннелей осуществляется из блоков на сварке. Трубопроводы 89x3 изготавливаются из титанового сплава. Трубопроводы 180x16,4 изготавливаются из полиэтилена.

Сборка трубопроводов осуществляется непосредственно на стройке из деталей (трубы, отводы, фланцы блоков).

11 Сварные соединения по ПНАЭ Г–7–010–89 "Оборудование и трубопроводы атомных энергетических установок. Сварные соединения и наплавки. Правила контроля" для трубопроводов дренажа туннелей относятся к категории II, подкатегории IIв.

12 Контроль качества сварных соединений по ПНАЭ Г–7–010–89 "Оборудование и трубопроводы атомных энергетических установок. Сварные соединения и наплавки. Правила контроля".

13 Торцевая сварка элементов полиэтиленовых трубопроводов выполняется сварочным аппаратом, оснащенным гидравлическим приводом с ЧПУ с блоком протоколирования.

14 Трубопроводы опорожнения PEB монтируются с обязательным устройством антикоррозийного защитного покрытия внутренней и наружной поверхности труб от влияния морской воды, грунта и кислорода воздуха в соответствии с техническими требованиями R28.KK34.0.0.TW.TT.WD002.

Данные работы выполняются отдельными проектами и в состав данного комплекта рабочей документации не входят.

15 Строительная часть выполняется по чертежам пакетов 3 9 2 17.

GENERAL GUIDELINES

1 The working drawings have been developed in accordance with basic provisions of the Contract No77–258/1415800 on elaboration of working documentation.

2 Working documents have been worked out in compliance with the Russian regulatory documents in force as on 15.05.2009.

3 Classification of pipelines elements:

emptying pipelines PEB (ø219,1x7,04):
– safety class 2 NP–001–97 (PNAE G–01–011–97) "General regulations on safety assurance at Nuclear power plants". OPB – 88/97;
– group B as per PNAE G–7–008–89 "Regulations on arrangement and safe operation of equipment and pipelines at Nuclear power plants";
– seismic stability category I in conformity with NP–031–01 "Design Standarts for aseismic nuclear power stations";

pipelines for drainage of tunnels (ø89x3):
– safety class 3 NP–001–97 (PNAE G–01–011–97) "General regulations on safety assurance at Nuclear power plants". OPB – 88/97;
– group C, category V as per SN 527–80 "Instruction on designing of steel technological pipelines Py up to 10 MPa;
– seismic stability category I in conformity with NP–031–01 "Design Standarts for aseismic nuclear power stations";

pipelines for drying–out of tunnels (ø180x16,4):
– safety class 4 NP–001–97 (PNAE G–01–011–97) "General regulations on safety assurance at Nuclear power plants". OPB – 88/97;
– seismic stability category II in conformity with NP–031–01 "Design Standarts for aseismic nuclear power stations";

4 Thickness of pipes is accepted rating the internal pressure of water considering increase of pipe wall thickness to pipe walls corrosion value during the whole period of operation.

5 Pipelines PEB emptying is to be executed through drain units that should be placed in lower points of pipelines and imply water discharge to the drainage pits in the tunnels UQZ.

Drainage units diameter is accepted due to pipelines gravity emptying within two hours.

Emptying pipelines PEB are to be laid out in tunnels 31UQZ on the slope towards water discharge into the pits. Pipelines gradient is determined by the tunnel floor slope.

6 Tunnels drainage and water discharge at emptying of PEB pipelines into the siphon well 34UQX is carried out by artesian pumps, suction tubes of which are placed in the drainage pits.

7 Tunnels drying–out in case of pipeline break is to be carried out by portable submerged–type pumps with drainage water discharge into the outlet canal 32UQN.

8 Drainage and drying–out pipelines are to be laid in compartment 31UUQ, in the ground and in the territory of the siphon well 34UQX.

9 Temperature rolling–out compensation is carried out due to natural turning angle of pipeline route.

All the forces and moments appeared from load combination (axial load, side load and weight load) are sustained by fixed supports.

10 Placing of emptying pipelines PEB is to be carried out of blocks by flange connections. Pipelines are made of carbon steel ASME–SA–106 Gr.B. The fittings and the flanges are made of carbon steel in accordance with ASME–SA–105.

Placing of drainage and drying–out pipelines is to be carried out of blocks at welding. Pipelines 89x3 are made of titanium alloy. Pipelines 180x16,4 are made of NDPE.

Assembly of pipelines is carried out directly at site of parts (pipes, pipe bends, flanges of blocks).

11 Welding joints are as per PNAE G–7–010–89 "Equipment and pipelines for Nuclear power plants. Welding joints and depositions. Rules of control" for drainage of tunnels are related to category II, subcategory IIb.

12 Welding joints quality control is as per PNAE G–7–010–89 "Equipment and pipelines for Nuclear power plants. Welding joints and depositions. Rules of control".

13 End welding of polyethvlene pipeline elements is performed by a welding machine equipped with a hydraulic CNC drive with a logging unit.

14 Pipelines PEB emptying are to be laid using anticorrosion protection coating of internal and external surfaces of pipes from sea water, ground and atmospheric oxygen impact in accordance with the technical requirements of R28.KK34.0.0.TW.TT.WD002.

The given works are to be implemented by separate designs and are not in the scope of present set of working documentation.

15 Civil part is to be implemented on drawings of package 3 9 2 17.

СХЕМА РАСПОЛОЖЕНИЯ
KEY PLAN

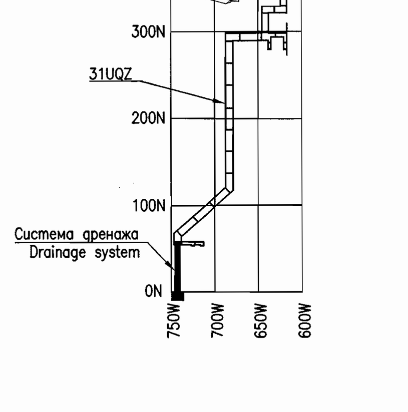

Package Number 3 12 6 44

File: R37 KK34 31UQZ PUQ TW OK WD001_01=0

Rev N	Issue N	Issued for	Signature	Issue sheet N

Принял / Accepted: Kats
FSUE "Atomenergoproekt" Moscow 2018
Arch. No | Date

При переписке в ссылке на документ (лист документа) следует указывать его обозначение, приведенное в основной надписи

In correspondence referring to the document (sheet of the document) it is necessary to specify its designation, given in the basic inscription

Данный чертеж не подлежит размножению или передаче другим организациям и лицам без согласия АО "Мособлгидропроект"

This drawing is not to be reproduced or transferred to other organizations or private persons without approval of Joint–stock Company "Institute HYDROPROJECT"

Изм. Rev.	N уч. N pat.	Лист Sheet	N док. Doc. No	Подпись Signature	Дата Date
Утвердил Approved	Togoev				07.18
Н. контр. Inspector	Alfimova				07.18
Разраб. Designed	Panov				07.18

NUCLEAR POWER CORPORATION OF INDIA LTD

R37.KK34.31UQZ.PUQ.TW.OK.WD001

АЭС "КУДАНКУЛАМ" БЛОК 3
NPP "KUDANKULAM" UNIT 3

31UQZ
Система дренажа сбросных вод. Дренаж воды из туннелей в случае разрыва трубопровода
31UQZ
Drain water removal system. Water removal from tunnels in case of pipeline break

Стадия Phase	Лист Sheet	Листов Sheets
WD	1	75

Общие данные
General data

Joint-stock Company "Institute HYDROPROJECT" Dedowsk 2018

формат A2x4

Inv.Nr 28286 Date 20.08.2018

Orig. arch. Nr.	Date	Replace arch. Nr.
428	12.07.2018	

СХЕМА ПРИНЦИПИАЛЬНАЯ
SCHEMATIC DIAGRAM

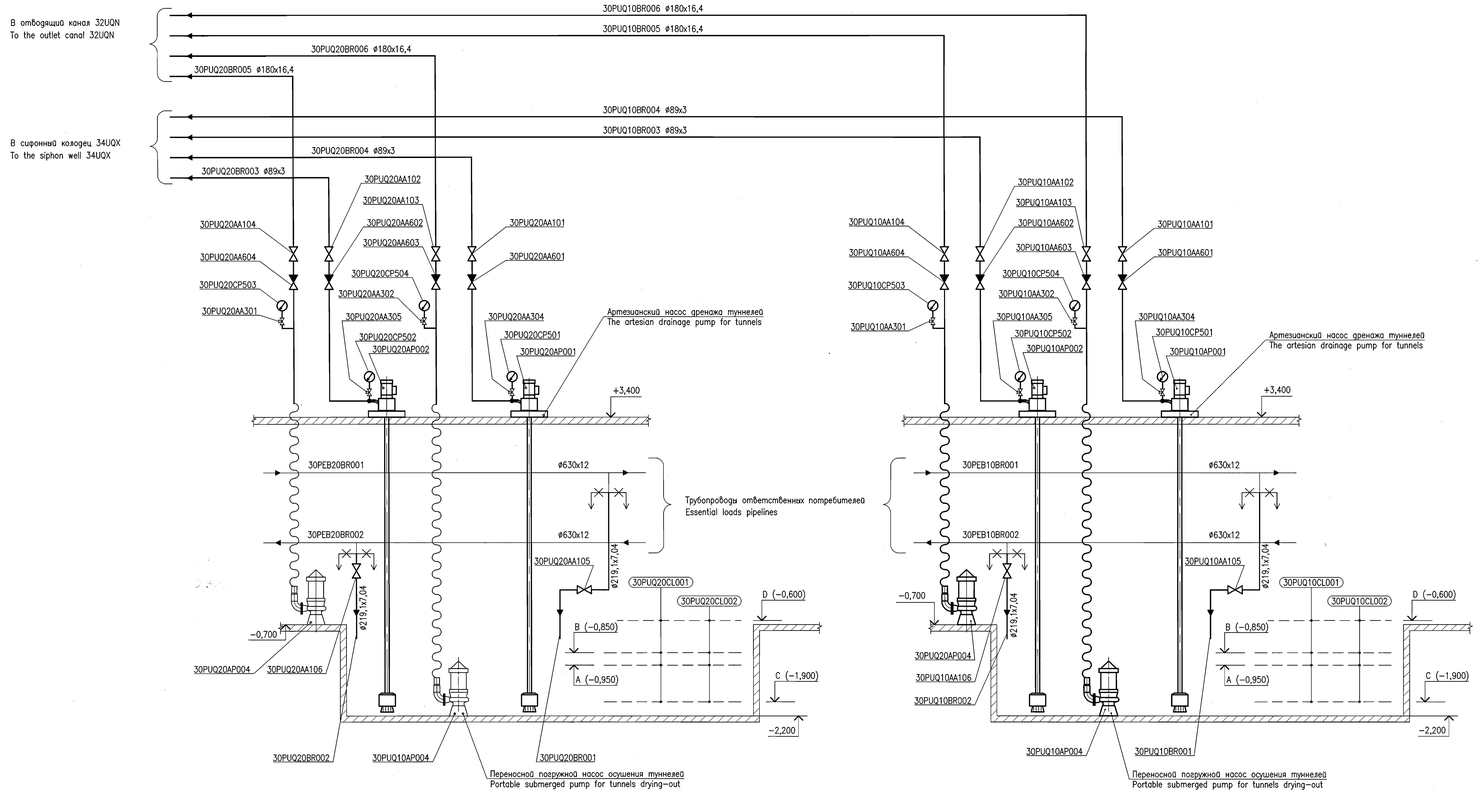

A – Включение первого насоса
Actuation of the first pump
B – Включение второго насоса
Actuation of the second pump
C – Отключение насосов
Switching-off of pumps
D – Включение аварийного сигнала затопления
Actuation of the emergency flooding signal

ПЕРЕЧЕНЬ ЭЛЕМЕНТОВ
LIST OF ELEMENTS

Поз. по СЗС Item as per specification of buildings and compartments	Код по системе KKS Code as per KKS	Наименование Name	Кол. Quant.	Примечание Note
	30PUQ10AP001 30PUQ10AP002 30PUQ20AP001 30PUQ20AP002	Агрегат насосный артезианского типа Artesian pump unit of type	4	Q=20 м³/ч H=0,3 МПа Q=20 m³/h H=0,3 MPa
	30PUQ10CP501 30PUQ10CP502 30PUQ20CP501 30PUQ20CP502	Манометр Pressure gauge	4	Комплектно с агрегатом насосным артезианского типа Complete with artesian pump unit
	30PUQ10AA304 30PUQ10AA305 30PUQ20AA304 30PUQ20AA305	Кран под манометр Pressure gauge valve	4	Комплектно с агрегатом насосным артезианского типа Complete with artesian pump unit
	30PUQ10AP004 30PUQ20AP004	Электронасос погружной Submerged pump	2	Q=180 м³/ч H=0,3 МПа Q=180 m³/h H=0,3 MPa
	30PUQ10AA103 30PUQ10AA104 30PUQ20AA103 30PUQ20AA104	Двустворчатый клапан Butterfly valve	4	DN 150 P 1,0 МПа DN 150 P 1,0 MPa
	30PUQ10AA105 30PUQ10AA106 30PUQ20AA105 30PUQ20AA106	Двустворчатый клапан Butterfly valve	4	DN 200 P 1,0 МПа DN 200 P 1,0 MPa
	30PUQ10AA101 30PUQ10AA102 30PUQ20AA101 30PUQ20AA102	Двустворчатый клапан Butterfly valve	4	DN 80 P 1,0 МПа DN 80 P 1,0 MPa
	30PUQ10AA603 30PUQ10AA604 30PUQ20AA603 30PUQ20AA604	Затвор обратный Check valve	4	DN 150 P 1,0 МПа DN 150 P 1,0 MPa
	30PUQ10AA601 30PUQ10AA602 30PUQ20AA601 30PUQ20AA602	Затвор обратный Check valve	4	DN 80 P 1,0 МПа DN 80 P 1,0 MPa
	30PUQ10CP503 30PUQ10CP504 30PUQ20CP503 30PUQ20CP504	Мановакуумметр показывающий Combined pressure-and-vacuum gauge indicating	4	
	30PUQ10AA301 30PUQ10AA302 30PUQ20AA301 30PUQ20AA302	Игольчатый вентиль Needle valve	4	DN 10 P 1,0 МПа DN 10 P 1,0 MPa
	30PUQ10CL001 30PUQ10CL002 30PUQ20CL001 30PUQ20CL002	Погружной датчик уровня Submersible Level Transmitter	4	

СХЕМА РАСПОЛОЖЕНИЯ
KEY PLAN

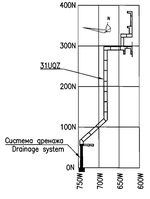

Package Number 3 12 6 44
File: R37 KK34 31UQZ PUQ TW OK WD001_02=0

Данный чертеж не подлежит размножению или передаче другим организациям и лицам без согласия АО "Мособлгидропроект"

This drawing is not to be reproduced or transferred to other organizations or private persons without approval of Joint-stock Company "Institute HYDROPROJECT"

Изм.	N уч.	Лист	N док.	Подпись	Дата
Rev.	N pat.	Sheet	Doc. No	Signature	Date
Утвердил Approved		Panov			04.07
Н. контр. Inspector		Alfimova			03.07
Разраб. Designed		Solodovnikova			03.07

R37.KK34.31UQZ.PUQ.TW.OK.WD001

АЭС "КУДАНКУЛАМ" БЛОК 3
NPP "KUDANKULAM" UNIT 3

31UQZ
Система дренажа сбросных вод. Дренаж воды из туннелей в случае разрыва трубопровода
31UQZ
Drain water removal system. Water removal from tunnels in case of pipeline break

Стадия	Лист	Листов
Phase	Sheet	Sheets
WD	2	

Схема принципиальная
Schematic diagram

Joint-Stock Company "Institute HYDROPROJECT"
Dubna ø 2018

Формат А2х3

Инв. N подл.	Подпись и дата	Взамен инв. N
428	12.07.2018	

Inv. Nr 28286 Date 20.08.2018

ПЛАН РАЗБИВКИ ТРУБОПРОВОДОВ 30PUQ10BR001, 30PUQ10BR002,30PUQ20BR001, 30PUQ20BR002 НА БЛОКИ.
BLOCK DIVISION PLAN OF PIPELINES 30PUQ10BR001, 30PUQ10BR002,30PUQ20BR001, 30PUQ20BR002

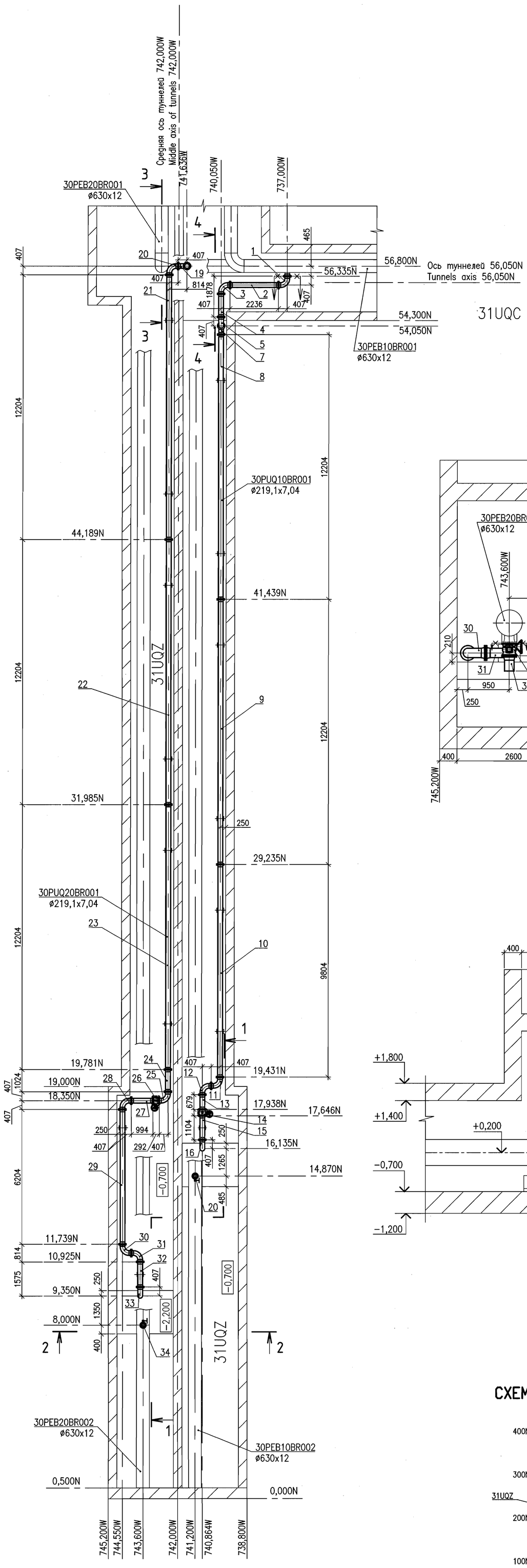

РАЗРЕЗ 4–4
SECTION 4–4

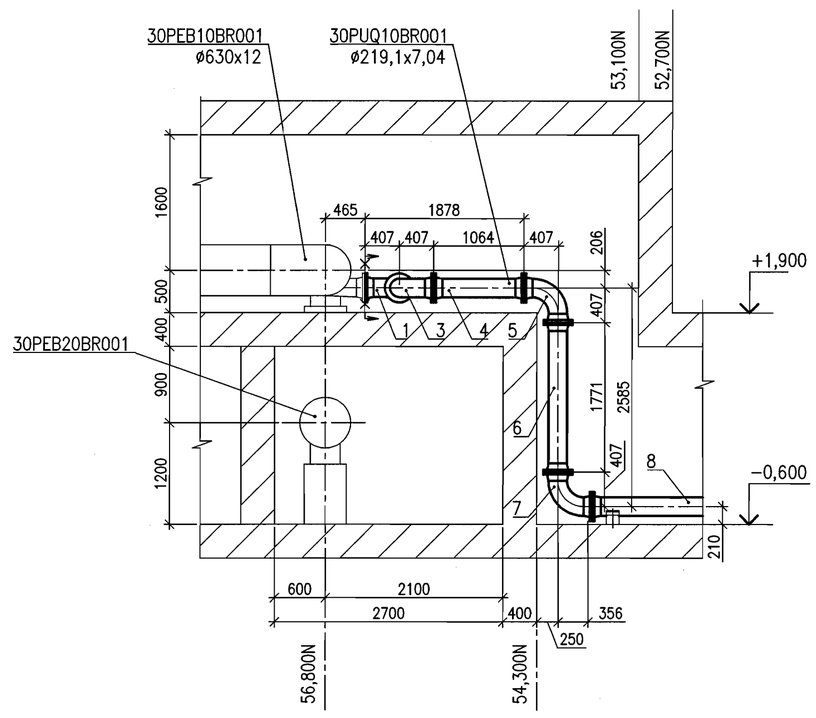

РАЗРЕЗ 2–2
SECTION 2–2

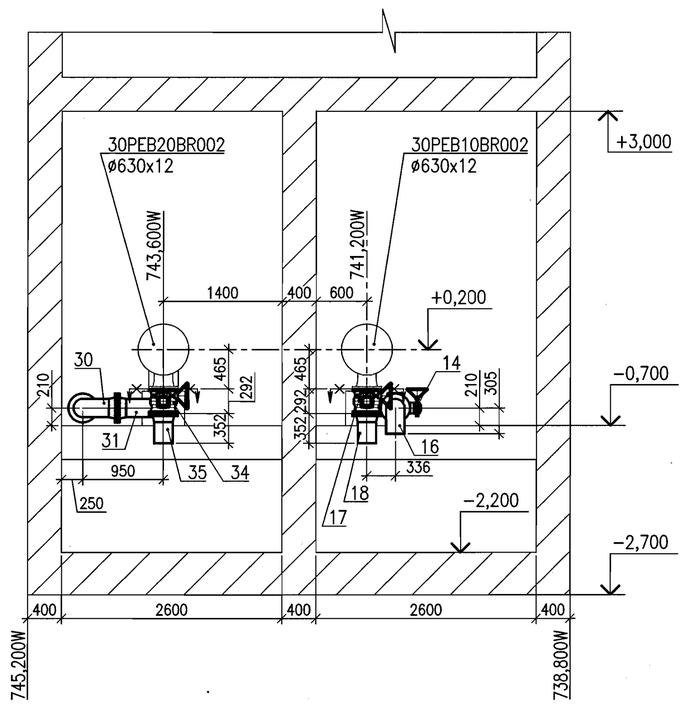

РАЗРЕЗ 3–3
SECTION 3–3

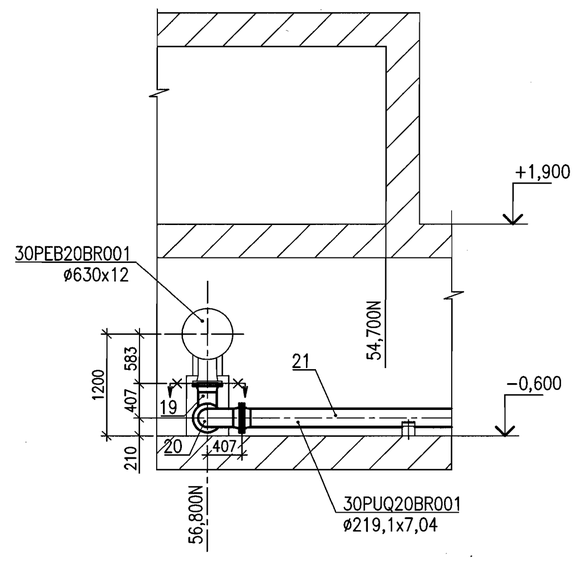

РАЗРЕЗ 1–1
SECTION 1–1

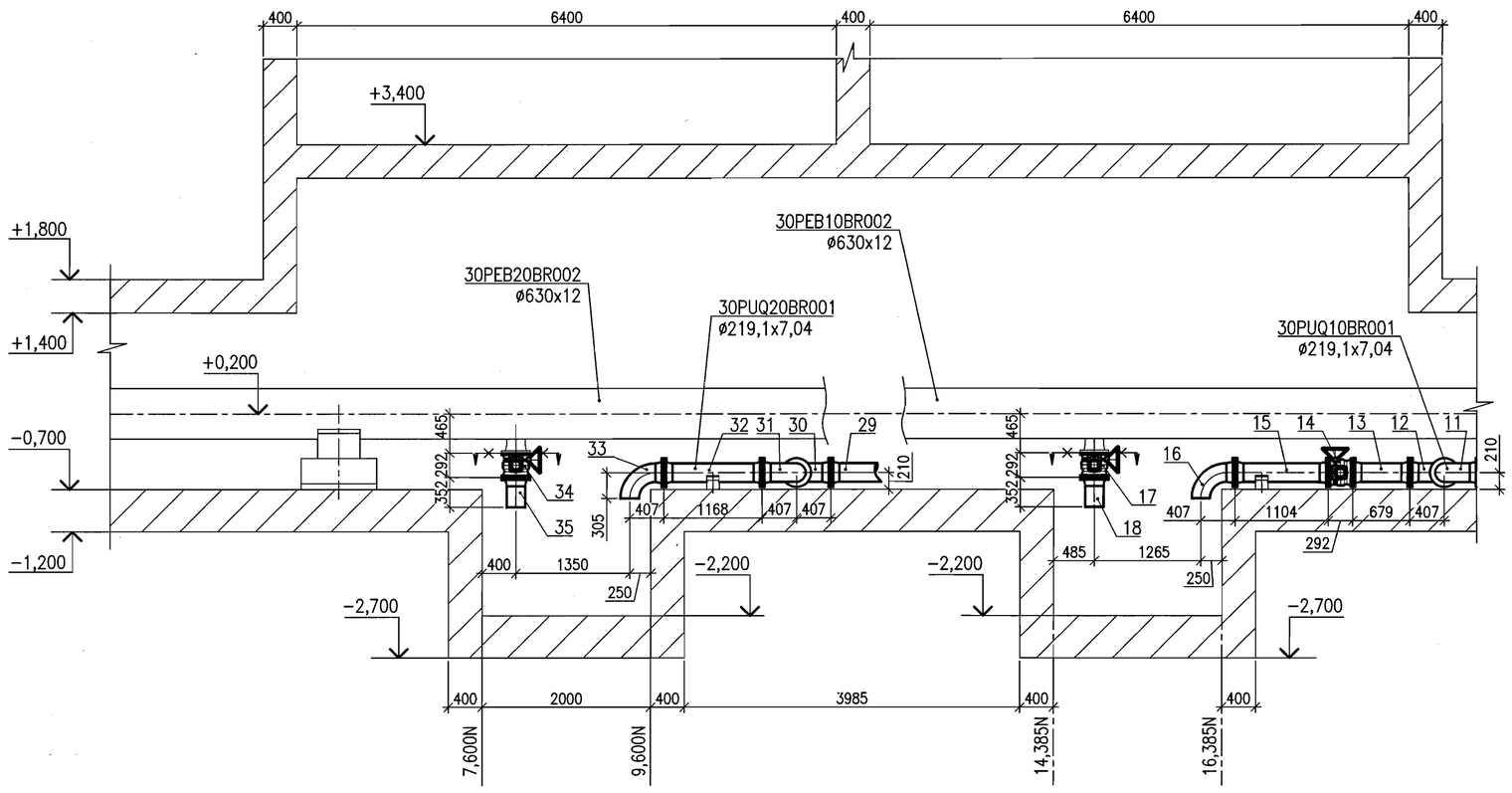

СХЕМА РАСПОЛОЖЕНИЯ
KEY PLAN

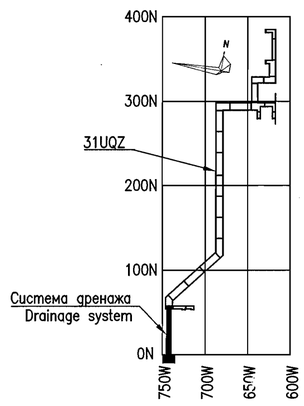

Package Number 3 12 6 44
File: R37 KK34 31UQZ PUQ TW OK WD001_03=0

Данный чертеж не подлежит размножению или передаче другим организациям и лицам без согласия АО "Мособлгидропроект"

This drawing is not to be reproduced or transferred to other organizations or private persons without approval of Joint-stock Company "Institute HYDROPROJECT"

Изм. / Rev.	N уч. / N pat.	Лист / Sheet	N док. / Doc. No	Подпись / Signature	Дата / Date
Утвердил / Approved		Panov			07.18
Н. контр. / Inspector		Alfimova			07.18
Разраб. / Designed		Solodovnikova			07.18

R37.KK34.31UQZ.PUQ.TW.OK.WD001

АЭС "КУДАНКУЛАМ" БЛОК 3
NPP "KUDANKULAM" UNIT 3

31UQZ
Система дренажа сбросных вод. Дренаж воды из туннелей в случае разрыва трубопровода
31UQZ
Drain water removal system. Water removal from tunnels in case of pipeline break

План разбивки трубопроводов 30PUQ10BR001, 30PUQ10BR002, 30PUQ20BR001, 30PUQ20BR002 на блоки, разрезы 1–1...4–4
Block division plan of pipelines 30PUQ10BR001, 30PUQ10BR002, 30PUQ20BR001, 30PUQ20BR002, sections 1–1...4–4

Стадия / Phase	Лист / Sheet	Листов / Sheets
WD	3	

Joint-stock Company "Institute HYDROPROJECT" Dedovsk 2018

Формат A1

Inv.Nr 28286 Date 20.08.2018
Replace arch. Nr.
Date 12.07.2018
Orig. arch. Nr. 4.2.8

СПЕЦИФИКАЦИЯ БЛОКОВ ТРУБОПРОВОДОВ 30PUQ10BR001, 30PUQ10BR002, 30PUQ20BR001, 30PUQ20BR002
BLOCKS SPECIFICATION OF PIPELINES 30PUQ10BR001, 30PUQ10BR002, 30PUQ20BR001, 30PUQ20BR002

Поз. Pos.	Обозначение Designation	Наименование Name of block	Кол. Q-ty	Масса ед., кг Unit weight, kg	Примечание Note
27	R37.KK34.31UQZ.PUQ.TW.OK.WD001 лист 25 Sheet 25	Блок 30PUQ20BR001MR027 Block 30PUQ20BR001MR027	1	64.5	
28	R37.KK34.31UQZ.PUQ.TW.OK.WD001 лист 22 Sheet 22	Блок 30PUQ20BR001MR028 Block 30PUQ20BR001MR028	1	65,9	
29	R37.KK34.31UQZ.PUQ.TW.OK.WD001 лист 26 Sheet 26	Блок 30PUQ20BR001MR029 Block 30PUQ20BR001MR029	1	256.1	
30	R37.KK34.31UQZ.PUQ.TW.OK.WD001 лист 22 Sheet 22	Блок 30PUQ20BR001MR030 Block 30PUQ20BR001MR030	1	65,9	
31	R37.KK34.31UQZ.PUQ.TW.OK.WD001 лист 22 Sheet 22	Блок 30PUQ20BR001MR031 Block 30PUQ20BR001MR031	1	65,9	
32	R37.KK34.31UQZ.PUQ.TW.OK.WD001 лист 27 Sheet 27	Блок 30PUQ20BR001MR032 Block 30PUQ20BR001MR032	1	70.9	
33	R37.KK34.31UQZ.PUQ.TW.OK.WD001 лист 28 Sheet 28	Блок 30PUQ20BR001MR033 Block 30PUQ20BR001MR033	1	48.2	
34	ASME B16.34-2006	Двустворчатый клапан DN 200; P 1,0 МПа Butterfly valve DN 200; P 1,0 MPa 30PUQ20AA106	1	–	
35	R37.KK34.31UQZ.PUQ.TW.OK.WD001 лист 29 Sheet 29	Блок 30PUQ20BR002MR035 Block 30PUQ20BR002MR035	1	26.9	

Поз. Pos.	Обозначение Designation	Наименование Name of block	Кол. Q-ty	Масса ед., кг Unit weight, kg	Примечание Note
14	ASME B16.34-2006	Двустворчатый клапан DN 200; P 1,0 МПа Butterfly valve DN 200; P 1,0 MPa 30PUQ10AA105	1	–	
15	R37.KK34.31UQZ.PUQ.TW.OK.WD001 лист 19 Sheet 19	Блок 30PUQ10BR001MR015 Block 30PUQ10BR001MR015	1	68,5	
16	R37.KK34.31UQZ.PUQ.TW.OK.WD001 лист 20 Sheet 20	Блок 30PUQ10BR001MR016 Block 30PUQ10BR001MR016	1	48,2	
17	ASME B16.34-2006	Двустворчатый клапан DN 200; P 1,0 МПа Butterfly valve DN 200; P 1,0 MPa 30PUQ10AA106	1	–	
18	R37.KK34.31UQZ.PUQ.TW.OK.WD001 лист 21 Sheet 21	Блок 30PUQ10BR002MR018 Block 30PUQ10BR002MR018	1	26.9	
19	R37.KK34.31UQZ.PUQ.TW.OK.WD001 лист 22 Sheet 22	Блок 30PUQ20BR001MR019 Block 30PUQ20BR001MR019	1	65,9	
20	R37.KK34.31UQZ.PUQ.TW.OK.WD001 лист 22 Sheet 22	Блок 30PUQ20BR001MR020 Block 30PUQ20BR001MR020	1	65,9	
21	R37.KK34.31UQZ.PUQ.TW.OK.WD001 лист 23 Sheet 23	Блок 30PUQ20BR001MR021 Block 30PUQ20BR001MR021	1	476,9	
22	R37.KK34.31UQZ.PUQ.TW.OK.WD001 лист 23 Sheet 23	Блок 30PUQ20BR001MR022 Block 30PUQ20BR001MR022	1	476,9	
23	R37.KK34.31UQZ.PUQ.TW.OK.WD001 лист 23 Sheet 23	Блок 30PUQ20BR001MR023 Block 30PUQ20BR001MR023	1	476,9	
24	R37.KK34.31UQZ.PUQ.TW.OK.WD001 лист 24 Sheet 24	Блок 30PUQ20BR001MR024 Block 30PUQ20BR001MR024	1	65.6	
25	R37.KK34.31UQZ.PUQ.TW.OK.WD001 лист 22 Sheet 22	Блок 30PUQ20BR001MR025 Block 30PUQ20BR001MR025	1	65,9	
26	ASME B16.34-2006	Двустворчатый клапан DN 200; P 1,0 МПа Butterfly valve DN 200; P 1,0 MPa 30PUQ20AA105	1	–	

Поз. Pos.	Обозначение Designation	Наименование Name of block	Кол. Q-ty	Масса ед., кг Unit weight, kg	Примечание Note
1	R37.KK34.31UQZ.PUQ.TW.OK.WD001 лист 12 Sheet 12	Блок 30PUQ10BR001MR001 Block 30PUQ10BR001MR001	1	65,9	
2	R37.KK34.31UQZ.PUQ.TW.OK.WD001 лист 13 Sheet 13	Блок 30PUQ10BR001MR002 Block 30PUQ10BR001MR002	1	110,2	
3	R37.KK34.31UQZ.PUQ.TW.OK.WD001 лист 12 Sheet 12	Блок 30PUQ10BR001MR003 Block 30PUQ10BR001MR003	1	65,9	
4	R37.KK34.31UQZ.PUQ.TW.OK.WD001 лист 14 Sheet 14	Блок 30PUQ10BR001MR004 Block 30PUQ10BR001MR004	1	67,0	
5	R37.KK34.31UQZ.PUQ.TW.OK.WD001 лист 12 Sheet 12	Блок 30PUQ10BR001MR005 Block 30PUQ10BR001MR005	1	65,9	
6	R37.KK34.31UQZ.PUQ.TW.OK.WD001 лист 15 Sheet 15	Блок 30PUQ10BR001MR006 Block 30PUQ10BR001MR006	1	93,0	
7	R37.KK34.31UQZ.PUQ.TW.OK.WD001 лист 12 Sheet 12	Блок 30PUQ10BR001MR007 Block 30PUQ10BR001MR007	1	65,9	
8	R37.KK34.31UQZ.PUQ.TW.OK.WD001 лист 16 Sheet 16	Блок 30PUQ10BR001MR008 Block 30PUQ10BR001MR008	1	476,9	
9	R37.KK34.31UQZ.PUQ.TW.OK.WD001 лист 16 Sheet 16	Блок 30PUQ10BR001MR009 Block 30PUQ10BR001MR009	1	476,9	
10	R37.KK34.31UQZ.PUQ.TW.OK.WD001 лист 17 Sheet 17	Блок 30PUQ10BR001MR010 Block 30PUQ10BR001MR010	1	388,6	
11	R37.KK34.31UQZ.PUQ.TW.OK.WD001 лист 12 Sheet 12	Блок 30PUQ10BR001MR011 Block 30PUQ10BR001MR011	1	65,9	
12	R37.KK34.31UQZ.PUQ.TW.OK.WD001 лист 12 Sheet 12	Блок 30PUQ10BR001MR012 Block 30PUQ10BR001MR012	1	65,9	
13	R37.KK34.31UQZ.PUQ.TW.OK.WD001 лист 18 Sheet 18	Блок 30PUQ10BR001MR013 Block 30PUQ10BR001MR013	1	52,9	

Номера позиций данной спецификации соответствуют номерам блоков на листе 3.
Position numbers of this specification correspond with blocks numeration on Sheet 3.

Package Number 3 12 6 44
File: R37 KK34 31UQZ PUQ TW OK WD001_04=0

Данный чертеж не подлежит размножению или передаче другим организациям и лицам без согласия АО "Мособлгидропроект"

This drawing is not to be reproduced or transferred to other organizations or private persons without approval of Joint-stock Company "Institute HYDROPROJECT"

Изм. Rev.	N уч. N pat.	Лист Sheet	N док. Doc. No	Подпись Signature	Дата Date
Утвердил Approved	Panov				03.18
Н. контр. Inspector	Alfimova				03.18
Разраб. Designed	Solodovnikova				03.18

R37.KK34.31UQZ.PUQ.TW.OK.WD001

АЭС "КУДАНКУЛАМ" БЛОК 3
NPP "KUDANKULAM" UNIT 3

31UQZ
Система дренажа сбросных вод. Дренаж воды из туннелей в случае разрыва трубопровода
31UQZ
Drain water removal system. Water removal from tunnels in case of pipeline break

Спецификация блоков трубороводов 30PUQ10BR001, 30PUQ10BR002, 30PUQ20BR001, 30PUQ20BR002
Blocks specification of pipelines 30PUQ10BR001, 30PUQ10BR002, 30PUQ20BR001, 30PUQ20BR002

Стадия Phase	Лист Sheet	Листов Sheets
WD	4	

Joint-Stock Company "Institute HYDROPROJECT" Dedowsk 2018

Формат А2

Inv.Nr 28286 Date 20.08.2018

Orig. arch. Nr.	Date	Replace arch. Nr.
428	12. 07. 2018	

ПЛАН РАССТАНОВКИ ОПОР НА ТРУБОПРОВОДАХ 30PUQ10BR001, 30PUQ20BR001.
LAYOUT OF SUPPORTS ON THE PIPELINES 30PUQ10BR001, 30PUQ20BR001.

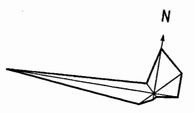

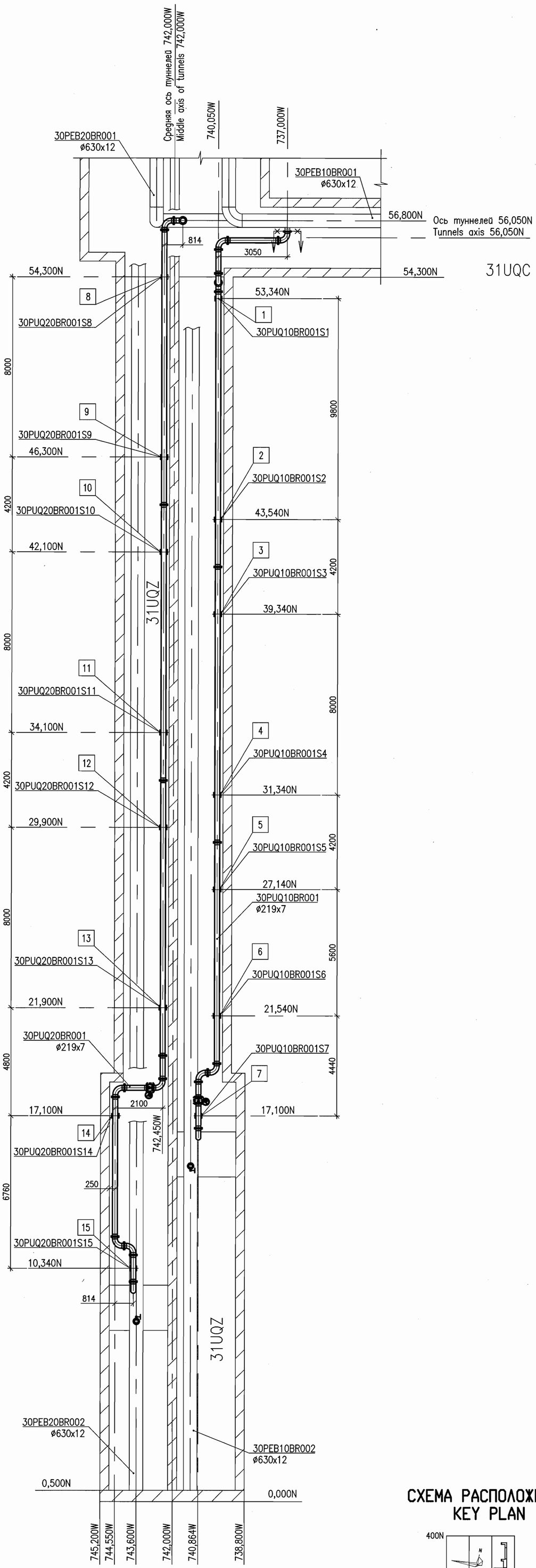

СХЕМА РАСПОЛОЖЕНИЯ
KEY PLAN

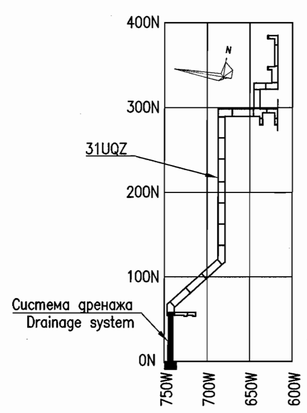

ВЕДОМОСТЬ ОПОР ТРУБОПРОВОДОВ 30PUQ10BR001, 30PUQ20BR001
LIST OF PIPELINES SUPPORTS 30PUQ10BR001, 30PUQ20BR001

Номер опоры на плане Support number on the plan	Код по системе KKS Code as per KKS	Наименование Description: Технологическая опора, ОСТ Technological support, OST	Кол. Q-ty	Масса ед.,кг Unit weight, kg	Отметка Elevation: Пол туннеля Tunnel floor	Ось трубопровода Pipeline axis
1	30PUQ10BR001S1	Скользящая опора Sliding support	1	5,91	−0,590	−0,380
2	30PUQ10BR001S2	Скользящая опора Sliding support	1	5,91	−0,627	−0,417
3	30PUQ10BR001S3	Скользящая опора Sliding support	1	5,91	−0,640	−0,430
4	30PUQ10BR001S4	Скользящая опора Sliding support	1	5,91	−0,665	−0,455
5	30PUQ10BR001S5	Скользящая опора Sliding support	1	5,91	−0,678	−0,468
6	30PUQ10BR001S6	Скользящая опора Sliding support	1	5,91	−0,695	−0,485
7	30PUQ10BR001S7	Неподвижная опора Fixed support	1	5,91	−0,700	−0,490
8	30PUQ20BR001S8	Скользящая опора Sliding support	1	5,91	−0,590	−0,380
9	30PUQ20BR001S9	Скользящая опора Sliding support	1	5,91	−0,618	−0,408
10	30PUQ20BR001S10	Скользящая опора Sliding support	1	5,91	−0,631	−0,421
11	30PUQ20BR001S11	Скользящая опора Sliding support	1	5,91	−0,656	−0,446
12	30PUQ20BR001S12	Скользящая опора Sliding support	1	5,91	−0,669	−0,459
13	30PUQ20BR001S13	Скользящая опора Sliding support	1	5,91	−0,694	−0,484
14	30PUQ20BR001S14	Скользящая опора Sliding support	1	5,91	−0,700	−0,490
15	30PUQ20BR001S15	Неподвижная опора Fixed support	1	5,91	−0,700	−0,490

Package Number 3 12 6 44
File: R37 KK34 31UQZ PUQ TW OK WD001_05=0

Данный чертеж не подлежит размножению или передаче другим организациям и лицам без согласия АО "Мособлгидропроект"

This drawing is not to be reproduced or transferred to other organizations or private persons without approval of Joint-stock Company "Institute HYDROPROJECT"

Изм. Rev.	N уч. N pat.	Лист Sheet	N док. Doc. No	Подпись Signature	Дата Date
Утвердил Approved		Panov			12.07.19
Н. контр. Inspector		Alfimova			07.19
Разраб. Designed		Solodovnikova			12.07.19

R37.KK34.31UQZ.PUQ.TW.OK.WD001

АЭС "КУДАНКУЛАМ" БЛОК 3
NPP "KUDANKULAM" UNIT

31UQZ
Система дренажа сбросных вод. Дренаж воды из туннелей в случае разрыва трубопровода
31UQZ
Drain water removal system. Water removal from tunnels in case of pipeline break

Стадия Phase	Лист Sheet	Листов Sheets
WD	5	

План расстановки опор на трубопроводах 30PUQ10BR001, 30PUQ20BR001, ведомость опор трубопроводов 30PUQ10BR001, 30PUQ20BR001
Layout of supports on the pipelines 30PUQ10BR001, 30PUQ20BR001, list of pipelines supports 30PUQ10BR001, 30PUQ20BR001

Joint-stock Company "Institute HYDROPROJECT" Dedovsk 2018

Формат А1

Inv.Nr 28286 Date 20.08.2018
Replace arch. Nr
Date 12.07.2019
Orig. arch. Nr. 428

ПЛАН РАЗБИВКИ ТРУБОПРОВОДОВ 30PUQ10(20)BR003, 30PUQ10(20)BR004, 30PUQ10(20)BR005, 30PUQ10(20)BR006 НА БЛОКИ
BLOCK DIVISION PLAN OF PIPELINES 30PUQ10(20)BR003, 30PUQ10(20)BR004, 30PUQ10(20)BR005, 30PUQ10(20)BR006

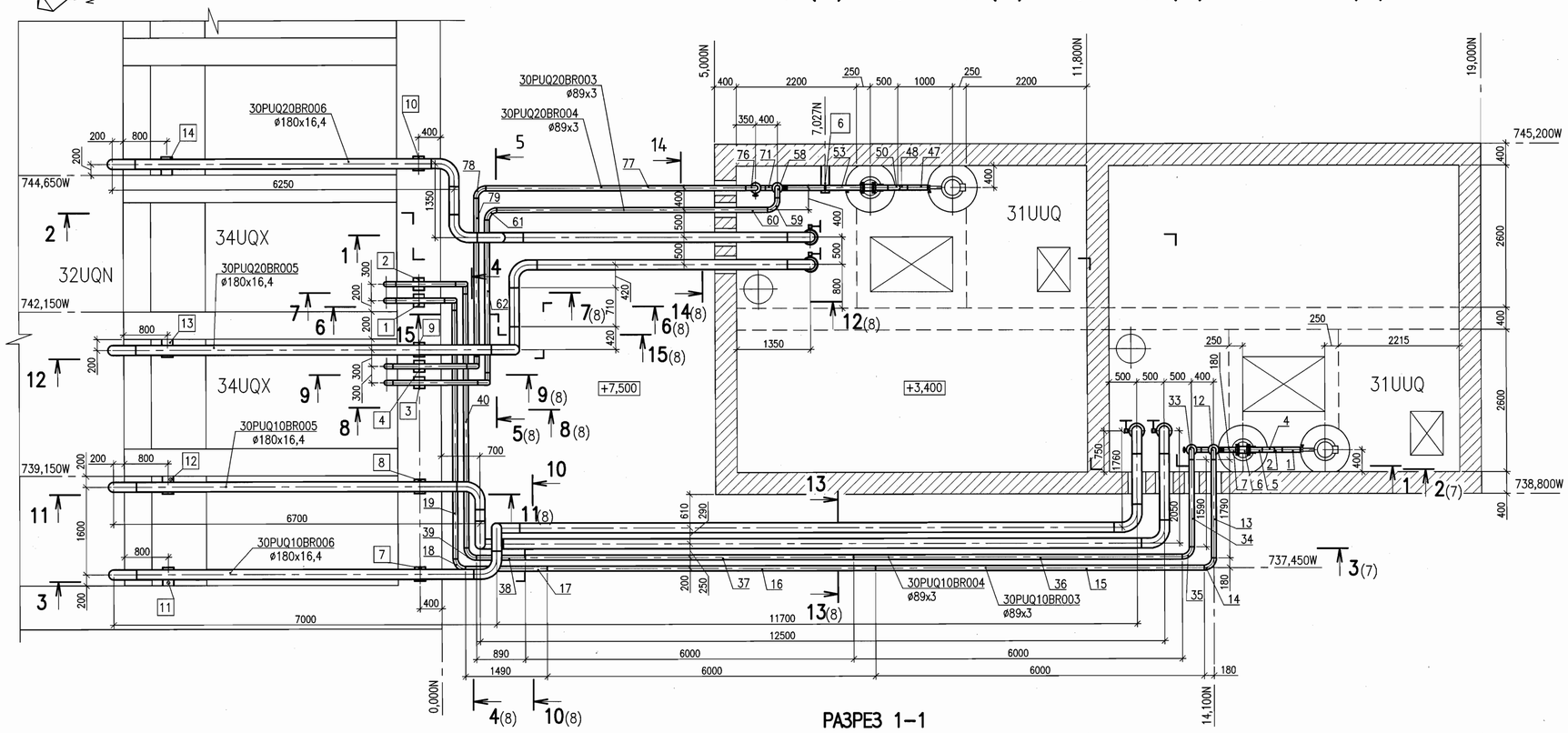

РАЗРЕЗ 1–1
SECTION 1–1

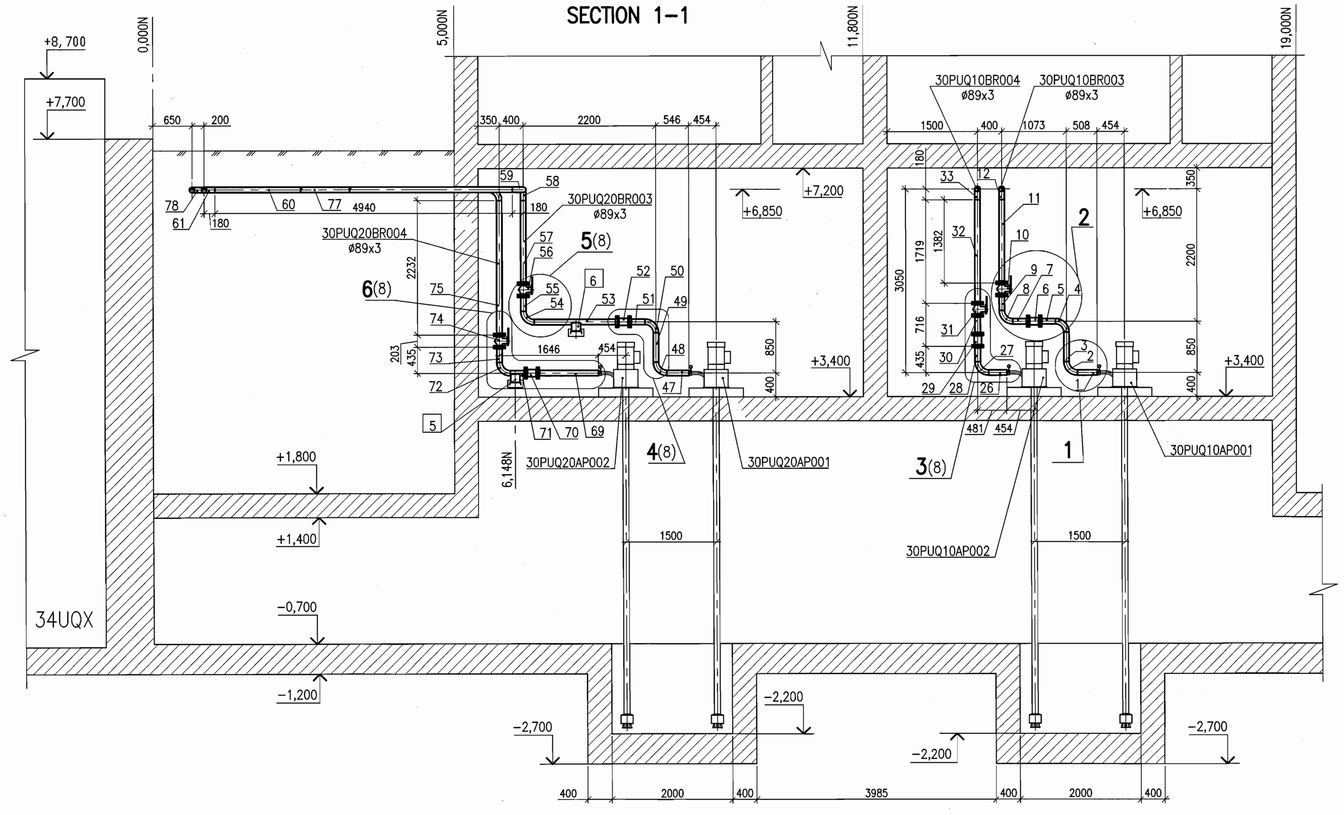

1

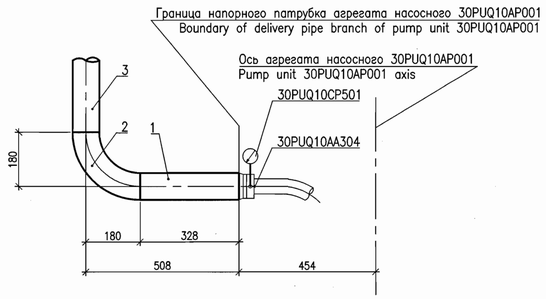

2

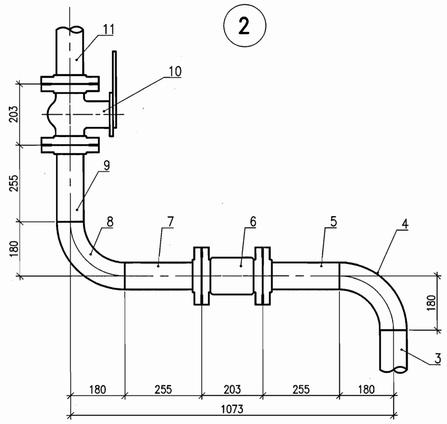

1 Спецификацию блоков трубопроводов смотри листы 9, 10, 11.
2 Ведомость опор трубопроводов смотри лист 74.

1 For pipelines blocks specification see sheets 9, 10, 11.
2 For list of pipelines supports see sheet 74.

СХЕМА РАСПОЛОЖЕНИЯ
KEY PLAN

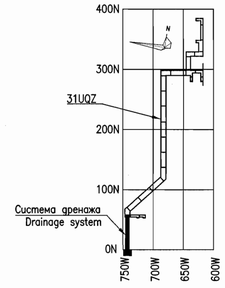

Package Number 3 12 6 44
File: R37 KK34 31UQZ PUQ TW OK WD001_06=0

Данный чертеж не подлежит размножению или передаче другим организациям и лицам без согласия АО "Мособлгидропроект"

This drawing is not to be reproduced or transferred to other organizations or private persons without approval of Joint-stock Company "Institute HYDROPROJECT"

Изм. / Rev.	N уч. / N pat.	Лист / Sheet	N док. / Doc. No	Подпись / Signature	Дата / Date
Утвердил / Approved		Panov			07.17
Н. контр. / Inspector		Alfimova			07.17
Разраб. / Designed		Solodovnikova			07.17

R37.KK34.31UQZ.PUQ.TW.OK.WD001

АЭС "КУДАНКУЛАМ" БЛОК 3
NPP "KUDANKULAM" UNIT 3

31UQZ
Система дренажа сбросных вод. Дренаж воды из туннелей в случае разрыва трубопровода
31UQZ
Drain water removal system. Water removal from tunnels in case of pipeline break

План разбивки трубопроводов 30PUQ10(20)BR003, 30PUQ10(20)BR004, 30PUQ10(20)BR005, 30PUQ10(20)BR006 на блоки, разрез 1–1, узел 1, 2
Block division plan of pipelines 30PUQ10(20)BR003, 30PUQ10(20)BR004, 30PUQ10(20)BR005, 30PUQ10(20)BR006 section 1–1, units 1, 2

Стадия / Phase	Лист / Sheet	Листов / Sheets
WD	6	

Joint-stock Company "Institute HYDROPROJECT"
Dedovsk 2018

Формат А1

Inv. Nr 28286 Date 20.08.2018

Orig. arch. Nr	Date	Replace arch. Nr
428	12.07.2018	

РАЗРЕЗ 2–2(6)
SECTION 2–2(6)

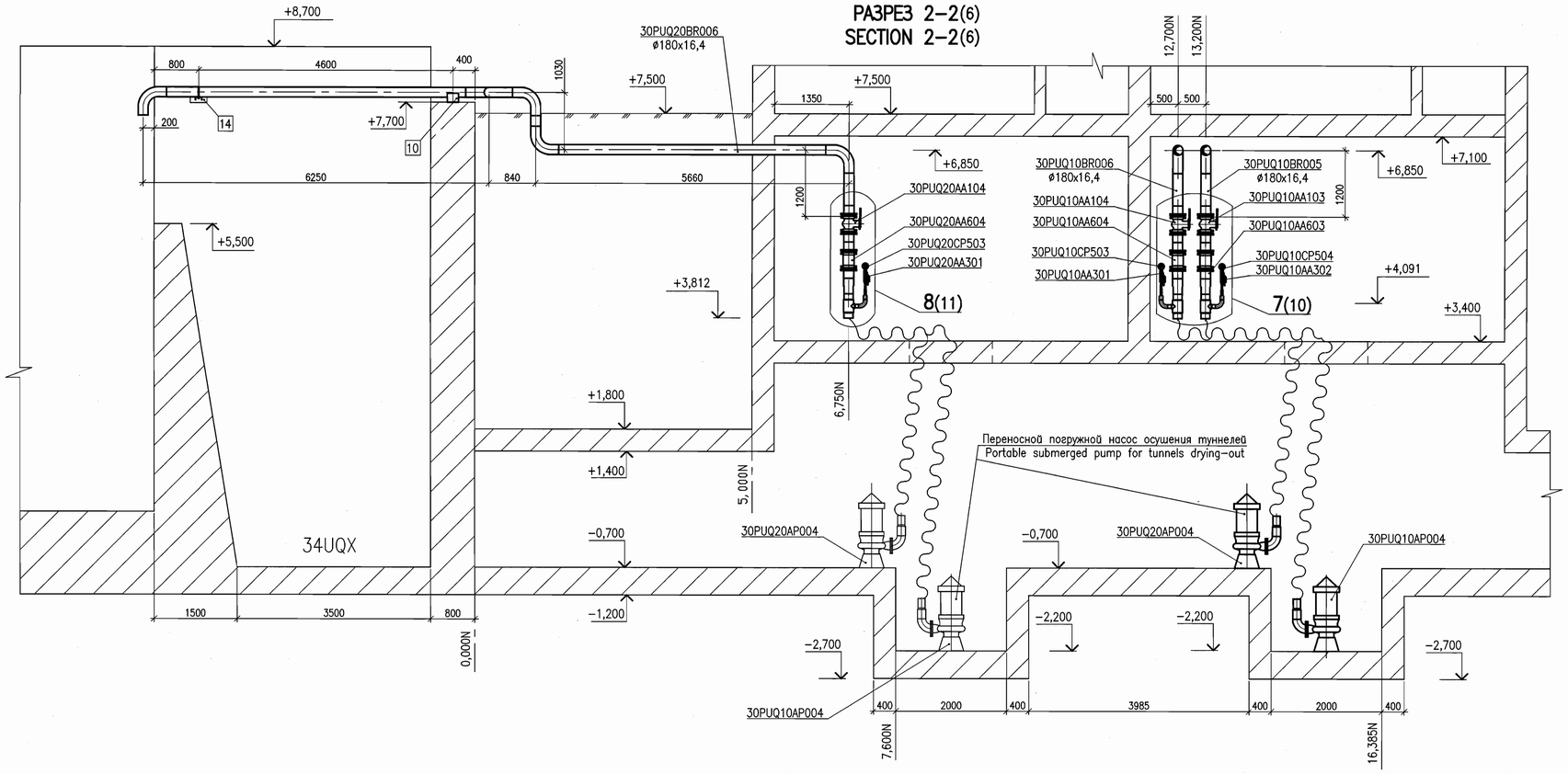

РАЗРЕЗ 3–3(6)
SECTION 3–3(6)

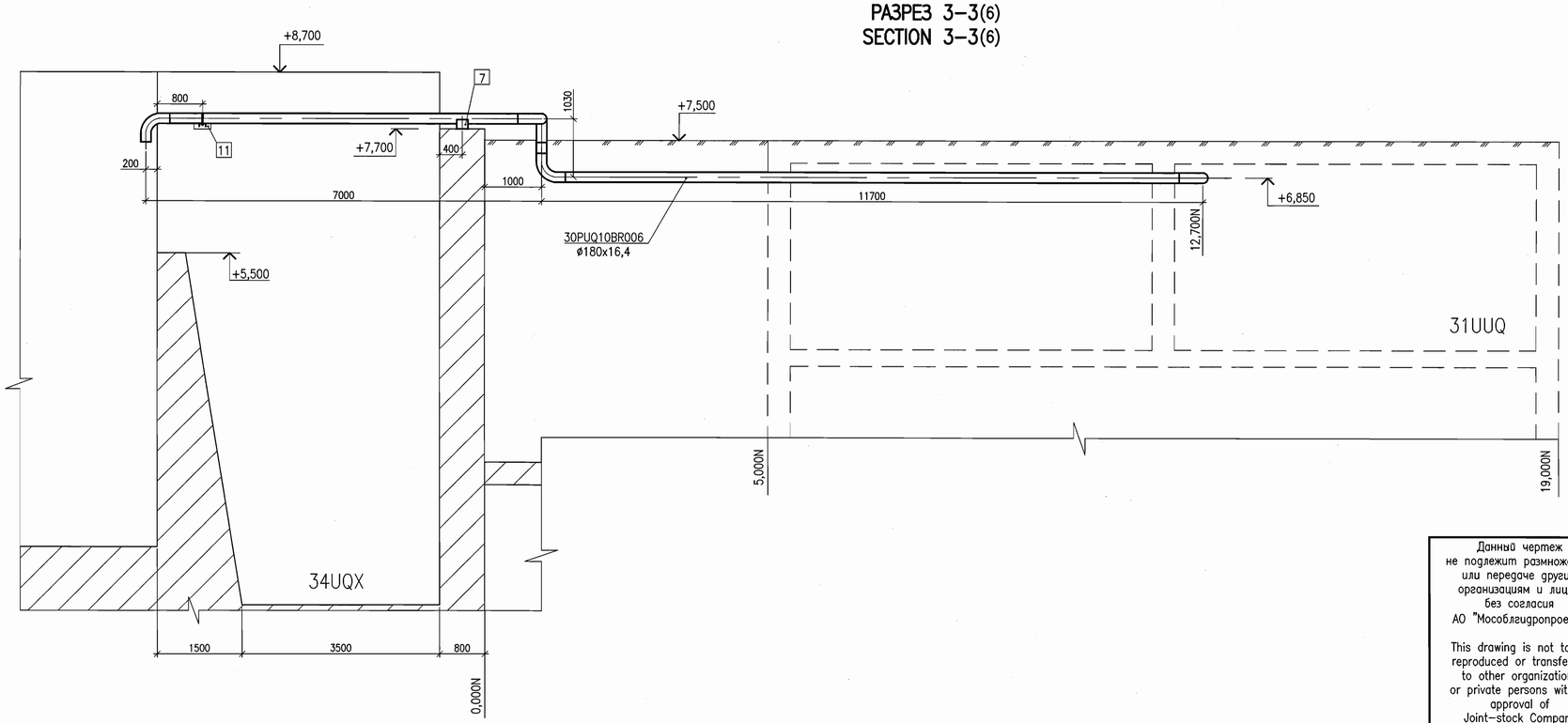

СХЕМА РАСПОЛОЖЕНИЯ
KEY PLAN

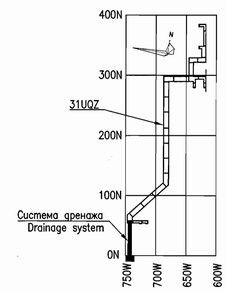

Package Number 3 12 6 44
File: R37 KK34 31UQZ PUQ TW OK WD001_07=0

Данный чертеж не подлежит размножению или передаче другим организациям и лицам без согласия АО "Мособлгидропроект"

This drawing is not to be reproduced or transferred to other organizations or private persons without approval of Joint-stock Company "Institute HYDROPROJECT"

Изм. Rev.	N уч. N pat.	Лист Sheet	N док. Doc. No	Подпись Signature	Дата Date
Утвердил Approved		Panov			07.18
Н. контр. Inspector		Alfimova			07.18
Разраб. Designed		Solodovnikova			07.18

R37.KK34.31UQZ.PUQ.TW.OK.WD001

АЭС "КУДАНКУЛАМ" БЛОК 3
NPP "KUDANKULAM" UNIT 3

31UQZ
Система дренажа сбросных вод. Дренаж воды из туннелей в случае разрыва трубопровода
31UQZ
Drain water removal system. Water removal from tunnels in case of pipeline break

Разрезы 2–2, 3–3
Sections 2–2, 3–3

Стадия Phase	Лист Sheet	Листов Sheets
WD	7	

Joint-stock Company "Institute HYDROPROJECT"
Dedovsk 2018

Формат А1

Inv.Nr: 28286 Date 20.08.2018

Orig. arch. Nr.	Date	Replace arch. Nr
428	14.07.2018	

РАЗРЕЗ 4–4(6)
SECTION 4–4(6)

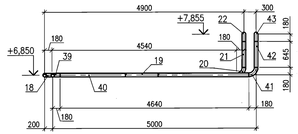

РАЗРЕЗ 5–5(6)
SECTION 5–5(6)

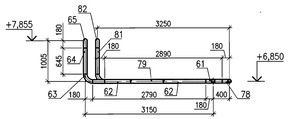

РАЗРЕЗ 6–6(6)
SECTION 6–6(6)

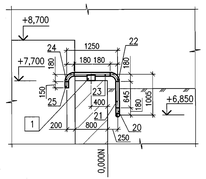

РАЗРЕЗ 7–7(6)
SECTION 7–7(6)

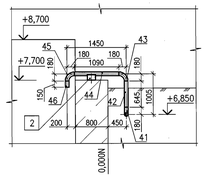

РАЗРЕЗ 11–11(6)
SECTION 11–11(6)

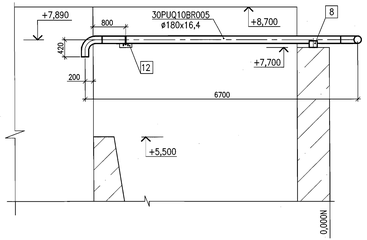

РАЗРЕЗ 8–8(6)
SECTION 8–8(6)

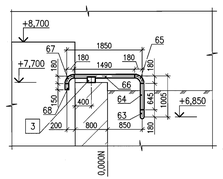

РАЗРЕЗ 9–9(6)
SECTION 9–9(6)

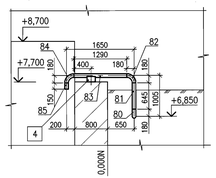

РАЗРЕЗ 10–10(6)
SECTION 10–10(6)

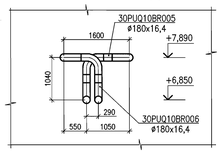

РАЗРЕЗ 12–12(6)
SECTION 12–12(6)

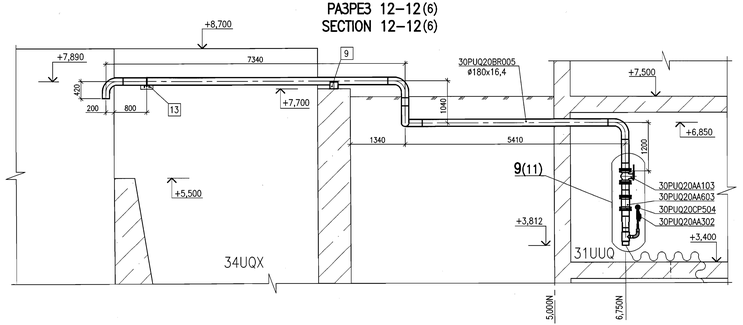

РАЗРЕЗ 13–13(6)
SECTION 13–13(6)

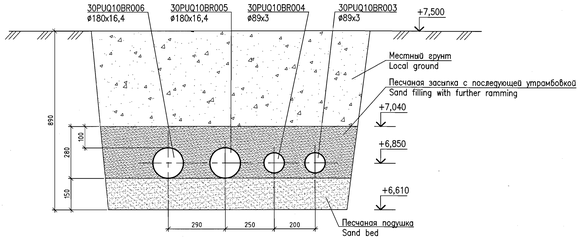

РАЗРЕЗ 14–14(6)
SECTION 14–14(6)

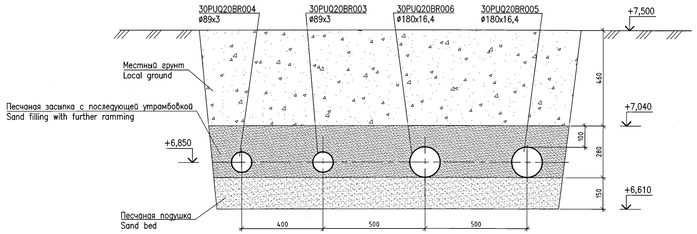

РАЗРЕЗ 15–15 (6)
SECTION 15–15 (6)

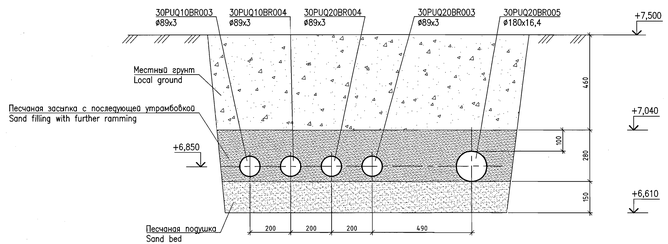

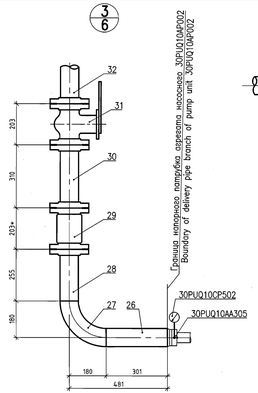

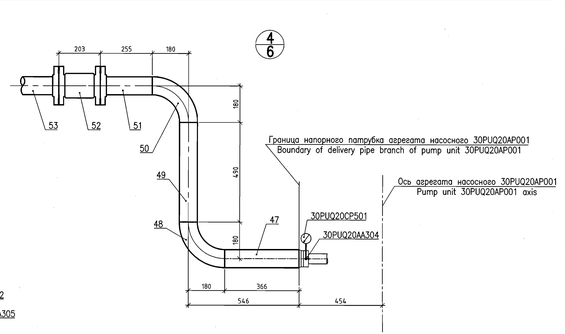

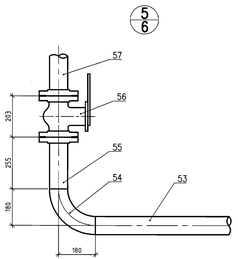

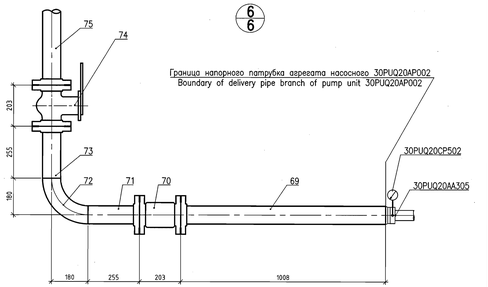

СХЕМА РАСПОЛОЖЕНИЯ
KEY PLAN

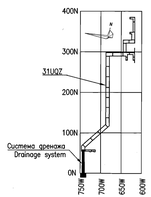

Package Number 3 12 6 44
File: R37 KK34 31UQZ PUQ TW OK WD001_08=0

Данный чертеж не подлежит размножению или передаче другим организациям и лицам без согласия АО "Мособлгидропроект"

This drawing is not to be reproduced or transferred to other organizations or private persons without approval of Joint-stock Company "Institute HYDROPROJECT"

Изм. N уч.	Лист N док.	Подпись	Дата
Rev. N pot.	Sheet No.	Signature	Date
Утверди	Panov		07.08
Approved			
Н. контр.	Alfimova		4.5.18
Inspector			
Разраб.	Solodnikova		07.08
Designed			

R37.KK34.31UQZ.PUQ.TW.OK.WD001

АЭС "КУДАНКУЛАМ" БЛОК 3
NPP "KUDANKULAM" UNIT 3

31UQZ

Система дренажа сбросная бод. Дренаж воды из туннелей в случае разрыва трубопровода
31UQZ

Drain water removal system. Water removal from tunnels in case of pipeline break

Стадия	Лист	Листов
Phase	Sheet	Sheets
WD	8	

Разрезы 4–4...15–15, узлы 3...6
Sections 4–4...15–15, units 3...6

Joint-Stock Company "Institute HYDROPROJECT" Dubna-ok 2018

Формат А2х3

Inv. Nr 29286 Date 20.08.2018

Инв. N подл.	Подпись и дата	Взам. инв. N
4 2 8	12.07.2018	

СПЕЦИФИКАЦИЯ БЛОКОВ ТРУБОПРОВОДОВ 30PUQ10BR003, 30PUQ20BR003
SPECIFICATION OF PIPELINES BLOCKS 30PUQ10BR003, 30PUQ20BR003

Поз. Pos.	Обозначение Designation	Наименование Name of Block	Кол. Quant	Масса ед., Unit weight, kg	Примечание Note
69	R37.KK.31UQZ.PUQ.TW.OK.WD001 лист 65 Sheet 65	Блок 30PUQ20BR004MR069 Block 30PUQ20BR004MR069	1	3,7	
70	ASME B16.34–2009	Затвор обратный DN 80; P 1,0 МПа Check valve DN 80; P 1,0 MPa 30PUQ20AA602	1	–	
71	R37.KK.31UQZ.PUQ.TW.OK.WD001 лист 66 Sheet 66	Блок 30PUQ20BR004MR071 Block 30PUQ20BR004MR071	1	3,1	
72	R37.KK.31UQZ.PUQ.TW.OK.WD001 лист 67 Sheet 67	Блок 30PUQ20BR004MR072 Block 30PUQ20BR004MR072	1	1,4	
73	R37.KK.31UQZ.PUQ.TW.OK.WD001 лист 66 Sheet 66	Блок 30PUQ20BR004MR073 Block 30PUQ20BR004MR073	1	3,1	
74	ASME B16.34–2009	Двустворчатый клапан DN 80; P 1,0 МПа Butterfly valve DN 80; P 1,0 MPa 30PUQ20AA102	1	–	
75	R37.KK.31UQZ.PUQ.TW.OK.WD001 лист 68 Sheet 68	Блок 30PUQ20BR004MR075 Block 30PUQ20BR004MR075	1	10,3	
76	R37.KK.31UQZ.PUQ.TW.OK.WD001 лист 67 Sheet 67	Блок 30PUQ20BR004MR076 Block 30PUQ20BR004MR076	1	1,4	
77	R37.KK.31UQZ.PUQ.TW.OK.WD001 лист 69 Sheet 69	Блок 30PUQ20BR004MR077 Block 30PUQ20BR004MR077	1	17,3	
78	R37.KK.31UQZ.PUQ.TW.OK.WD001 лист 67 Sheet 67	Блок 30PUQ20BR004MR078 Block 30PUQ20BR004MR078	1	1,4	
79	R37.KK.31UQZ.PUQ.TW.OK.WD001 лист 70 Sheet 70	Блок 30PUQ20BR004MR079 Block 30PUQ20BR004MR079	1	10,6	
80	R37.KK.31UQZ.PUQ.TW.OK.WD001 лист 67 Sheet 67	Блок 30PUQ20BR004MR080 Block 30PUQ20BR004MR080	1	1,4	
81	R37.KK.31UQZ.PUQ.TW.OK.WD001 лист 71 Sheet 71	Блок 30PUQ20BR004MR081 Block 30PUQ20BR004MR081	1	2,4	
82	R37.KK.31UQZ.PUQ.TW.OK.WD001 лист 67 Sheet 67	Блок 30PUQ20BR004MR082 Block 30PUQ20BR004MR082	1	1,4	
83	R37.KK.31UQZ.PUQ.TW.OK.WD001 лист 72 Sheet 72	Блок 30PUQ20BR004MR083 Block 30PUQ20BR004MR083	1	4,7	
84	R37.KK.31UQZ.PUQ.TW.OK.WD001 лист 67 Sheet 67	Блок 30PUQ20BR004MR084 Block 30PUQ20BR004MR084	1	1,4	
85	R37.KK.31UQZ.PUQ.TW.OK.WD001 лист 73 Sheet 73	Блок 30PUQ20BR004MR085 Block 30PUQ20BR004MR085	1	0,6	

Поз. Pos.	Обозначение Designation	Наименование Name of Block	Кол. Quant	Масса ед., Unit weight, kg	Примечание Note
47	R37.KK.31UQZ.PUQ.TW.OK.WD001 лист 54 Sheet 54	Блок 30PUQ20BR003MR047 Block 30PUQ20BR003MR047	1	1,7	
48	R37.KK.31UQZ.PUQ.TW.OK.WD001 лист 55 Sheet 55	Блок 30PUQ20BR003MR048 Block 30PUQ20BR003MR048	1	1,4	
49	R37.KK.31UQZ.PUQ.TW.OK.WD001 лист 56 Sheet 56	Блок 30PUQ20BR003MR049 Block 30PUQ20BR003MR049	1	1,8	
50	R37.KK.31UQZ.PUQ.TW.OK.WD001 лист 55 Sheet 55	Блок 30PUQ20BR003MR050 Block 30PUQ20BR003MR050	1	1,4	
51	R37.KK.31UQZ.PUQ.TW.OK.WD001 лист 57 Sheet 57	Блок 30PUQ20BR003MR051 Block 30PUQ20BR003MR051	1	3,1	
52	ASME B16.34–2009	Затвор обратный DN 80; P 1,0 МПа Check valve DN 80; P 1,0 MPa 30PUQ20AA601	1	–	
53	R37.KK.31UQZ.PUQ.TW.OK.WD001 лист 58 Sheet 58	Блок 30PUQ20BR003MR053 Block 30PUQ20BR003MR053	1	7,3	
54	R37.KK.31UQZ.PUQ.TW.OK.WD001 лист 55 Sheet 55	Блок 30PUQ20BR003MR054 Block 30PUQ20BR003MR054	1	1,4	
55	R37.KK.31UQZ.PUQ.TW.OK.WD001 лист 57 Sheet 57	Блок 30PUQ20BR003MR055 Block 30PUQ20BR003MR055	1	3,1	
56	ASME B16.34–2009	Двустворчатый клапан DN 80; P 1,0 МПа Butterfly valve DN 80; P 1,0 MPa 30PUQ20AA101	1	–	
57	R37.KK.31UQZ.PUQ.TW.OK.WD001 лист 58 Sheet 58	Блок 30PUQ20BR003MR057 Block 30PUQ20BR003MR057	1	7,3	
58	R37.KK.31UQZ.PUQ.TW.OK.WD001 лист 55 Sheet 55	Блок 30PUQ20BR003MR058 Block 30PUQ20BR003MR058	1	1,4	
59	R37.KK.31UQZ.PUQ.TW.OK.WD001 лист 59 Sheet 59	Блок 30PUQ20BR003MR059 Block 30PUQ20BR003MR059	1	1,5	
60	R37.KK.31UQZ.PUQ.TW.OK.WD001 лист 60 Sheet 60	Блок 30PUQ20BR003MR060 Block 30PUQ20BR003MR060	1	18,0	
61	R37.KK.31UQZ.PUQ.TW.OK.WD001 лист 55 Sheet 55	Блок 30PUQ20BR003MR061 Block 30PUQ20BR003MR061	1	1,4	
62	R37.KK.31UQZ.PUQ.TW.OK.WD001 лист 61 Sheet 61	Блок 30PUQ20BR003MR062 Block 30PUQ20BR003MR062	1	10,2	
63	R37.KK.31UQZ.PUQ.TW.OK.WD001 лист 55 Sheet 55	Блок 30PUQ20BR003MR063 Block 30PUQ20BR003MR063	1	1,4	
64	R37.KK.31UQZ.PUQ.TW.OK.WD001 лист 62 Sheet 62	Блок 30PUQ20BR003MR064 Block 30PUQ20BR003MR064	1	2,4	
65	R37.KK.31UQZ.PUQ.TW.OK.WD001 лист 55 Sheet 55	Блок 30PUQ20BR003MR065 Block 30PUQ20BR003MR065	1	1,4	
66	R37.KK.31UQZ.PUQ.TW.OK.WD001 лист 63 Sheet 63	Блок 30PUQ20BR003MR066 Block 30PUQ20BR003MR066	1	5,4	
67	R37.KK.31UQZ.PUQ.TW.OK.WD001 лист 55 Sheet 55	Блок 30PUQ20BR003MR067 Block 30PUQ20BR003MR067	1	1,4	
68	R37.KK.31UQZ.PUQ.TW.OK.WD001 лист 64 Sheet 64	Блок 30PUQ20BR003MR068 Block 30PUQ20BR003MR068	1	0,6	

Поз. Pos.	Обозначение Designation	Наименование Name of Block	Кол. Quant	Масса ед., Unit weight, kg	Примечание Note
26	R37.KK.31UQZ.PUQ.TW.OK.WD001 лист 42 Sheet 42	Блок 30PUQ10BR004MR026 Block 30PUQ10BR004MR026	1	1,5	
27	R37.KK.31UQZ.PUQ.TW.OK.WD001 лист 43 Sheet 43	Блок 30PUQ10BR004MR027 Block 30PUQ10BR004MR027	1	1,4	
28	R37.KK.31UQZ.PUQ.TW.OK.WD001 лист 44 Sheet 44	Блок 30PUQ10BR004MR028 Block 30PUQ10BR004MR028	1	3,1	
29	ASME B16.34–2009	Затвор обратный DN 80; P 1,0 МПа Check valve DN 80; P 1,0 MPa 30PUQ10AA602	1	–	
30	R37.KK.31UQZ.PUQ.TW.OK.WD001 лист 45 Sheet 45	Блок 30PUQ10BR004MR030 Block 30PUQ10BR004MR030	1	5,5	
31	ASME B16.34–2009	Двустворчатый клапан DN 80; P 1,0 МПа Butterfly valve DN 80; P 1,0 MPa 30PUQ10AA102	1	–	
32	R37.KK.31UQZ.PUQ.TW.OK.WD001 лист 46 Sheet 46	Блок 30PUQ10BR004MR032 Block 30PUQ10BR004MR032	1	8,5	
33	R37.KK.31UQZ.PUQ.TW.OK.WD001 лист 43 Sheet 43	Блок 30PUQ10BR004MR033 Block 30PUQ10BR004MR033	1	1,4	
34	R37.KK.31UQZ.PUQ.TW.OK.WD001 лист 47 Sheet 47	Блок 30PUQ10BR004MR034 Block 30PUQ10BR004MR034	1	5,8	
35	R37.KK.31UQZ.PUQ.TW.OK.WD001 лист 43 Sheet 43	Блок 30PUQ10BR004MR035 Block 30PUQ10BR004MR035	1	1,4	
36	R37.KK.31UQZ.PUQ.TW.OK.WD001 лист 48 Sheet 48	Блок 30PUQ10BR004MR036 Block 30PUQ10BR004MR036	1	21,9	
37	R37.KK.31UQZ.PUQ.TW.OK.WD001 лист 48 Sheet 48	Блок 30PUQ10BR004MR037 Block 30PUQ10BR004MR037	1	21,9	
38	R37.KK.31UQZ.PUQ.TW.OK.WD001 лист 49 Sheet 49	Блок 30PUQ10BR004MR038 Block 30PUQ10BR004MR038	1	3,3	
39	R37.KK.31UQZ.PUQ.TW.OK.WD001 лист 43 Sheet 43	Блок 30PUQ10BR004MR039 Block 30PUQ10BR004MR039	1	1,4	
40	R37.KK.31UQZ.PUQ.TW.OK.WD001 лист 50 Sheet 50	Блок 30PUQ10BR004MR040 Block 30PUQ10BR004MR040	1	16,9	
41	R37.KK.31UQZ.PUQ.TW.OK.WD001 лист 43 Sheet 43	Блок 30PUQ10BR004MR041 Block 30PUQ10BR004MR041	1	1,4	
42	R37.KK.31UQZ.PUQ.TW.OK.WD001 лист 51 Sheet 51	Блок 30PUQ10BR004MR042 Block 30PUQ10BR004MR042	1	2,4	
43	R37.KK.31UQZ.PUQ.TW.OK.WD001 лист 43 Sheet 43	Блок 30PUQ10BR004MR043 Block 30PUQ10BR004MR043	1	1,4	
44	R37.KK.31UQZ.PUQ.TW.OK.WD001 лист 52 Sheet 52	Блок 30PUQ10BR004MR044 Block 30PUQ10BR004MR044	1	4,0	
45	R37.KK.31UQZ.PUQ.TW.OK.WD001 лист 43 Sheet 43	Блок 30PUQ10BR004MR045 Block 30PUQ10BR004MR045	1	1,4	
46	R37.KK.31UQZ.PUQ.TW.OK.WD001 лист 53 Sheet 53	Блок 30PUQ10BR004MR046 Block 30PUQ10BR004MR046	1	0,6	

Поз. Pos.	Обозначение Designation	Наименование Name of Block	Кол. Quant	Масса ед., Unit weight, kg	Примечание Note
1	R37.KK.31UQZ.PUQ.TW.OK.WD001 лист 30 Sheet 30	Блок 30PUQ10BR003MR001 Block 30PUQ10BR003MR001	1	1,6	
2	R37.KK.31UQZ.PUQ.TW.OK.WD001 лист 31 Sheet 31	Блок 30PUQ10BR003MR002 Block 30PUQ10BR003MR002	1	1,4	
3	R37.KK.31UQZ.PUQ.TW.OK.WD001 лист 32 Sheet 32	Блок 30PUQ10BR003MR003 Block 30PUQ10BR003MR003	1	1,8	
4	R37.KK.31UQZ.PUQ.TW.OK.WD001 лист 31 Sheet 31	Блок 30PUQ10BR003MR004 Block 30PUQ10BR003MR004	1	1,4	
5	R37.KK.31UQZ.PUQ.TW.OK.WD001 лист 33 Sheet 33	Блок 30PUQ10BR003MR005 Block 30PUQ10BR003MR005	1	3,1	
6	ASME B16.34–2009	Затвор обратный DN 80; P 1,0 МПа Check valve DN 80; P 1,0 MPa 30PUQ10AA601	1	–	
7	R37.KK.31UQZ.PUQ.TW.OK.WD001 лист 33 Sheet 33	Блок 30PUQ10BR003MR007 Block 30PUQ10BR003MR007	1	3,1	
8	R37.KK.31UQZ.PUQ.TW.OK.WD001 лист 31 Sheet 31	Блок 30PUQ10BR003MR008 Block 30PUQ10BR003MR008	1	1,4	
9	R37.KK.31UQZ.PUQ.TW.OK.WD001 лист 33 Sheet 33	Блок 30PUQ10BR003MR009 Block 30PUQ10BR003MR009	1	3,1	
10	ASME B16.34–2009	Двустворчатый клапан DN 80; P 1,0 МПа Butterfly valve DN 80; P 1,0 MPa 30PUQ10AA101	1	–	
11	R37.KK.31UQZ.PUQ.TW.OK.WD001 лист 34 Sheet 34	Блок 30PUQ10BR003MR011 Block 30PUQ10BR003MR011	1	7,2	
12	R37.KK.31UQZ.PUQ.TW.OK.WD001 лист 31 Sheet 31	Блок 30PUQ10BR003MR012 Block 30PUQ10BR003MR012	1	1,4	
13	R37.KK.31UQZ.PUQ.TW.OK.WD001 лист 35 Sheet 35	Блок 30PUQ10BR003MR013 Block 30PUQ10BR003MR013	1	6,5	
14	R37.KK.31UQZ.PUQ.TW.OK.WD001 лист 31 Sheet 31	Блок 30PUQ10BR003MR014 Block 30PUQ10BR003MR014	1	1,4	
15	R37.KK.31UQZ.PUQ.TW.OK.WD001 лист 36 Sheet 36	Блок 30PUQ10BR003MR015 Block 30PUQ10BR003MR015	1	21,6	
16	R37.KK.31UQZ.PUQ.TW.OK.WD001 лист 36 Sheet 36	Блок 30PUQ10BR003MR016 Block 30PUQ10BR003MR016	1	21,6	
17	R37.KK.31UQZ.PUQ.TW.OK.WD001 лист 37 Sheet 37	Блок 30PUQ10BR003MR017 Block 30PUQ10BR003MR017	1	5,4	
18	R37.KK.31UQZ.PUQ.TW.OK.WD001 лист 31 Sheet 31	Блок 30PUQ10BR003MR018 Block 30PUQ10BR003MR018	1	1,4	
19	R37.KK.31UQZ.PUQ.TW.OK.WD001 лист 38 Sheet 38	Блок 30PUQ10BR003MR019 Block 30PUQ10BR003MR019	1	16,6	
20	R37.KK.31UQZ.PUQ.TW.OK.WD001 лист 31 Sheet 31	Блок 30PUQ10BR003MR020 Block 30PUQ10BR003MR020	1	1,4	
21	R37.KK.31UQZ.PUQ.TW.OK.WD001 лист 39 Sheet 39	Блок 30PUQ10BR003MR021 Block 30PUQ10BR003MR021	1	2,4	
22	R37.KK.31UQZ.PUQ.TW.OK.WD001 лист 31 Sheet 31	Блок 30PUQ10BR003MR022 Block 30PUQ10BR003MR022	1	1,4	
23	R37.KK.31UQZ.PUQ.TW.OK.WD001 лист 40 Sheet 40	Блок 30PUQ10BR003MR023 Block 30PUQ10BR003MR023	1	3,3	
24	R37.KK.31UQZ.PUQ.TW.OK.WD001 лист 31 Sheet 31	Блок 30PUQ10BR003MR024 Block 30PUQ10BR003MR024	1	1,4	
25	R37.KK.31UQZ.PUQ.TW.OK.WD001 лист 41 Sheet 41	Блок 30PUQ10BR003MR025 Block 30PUQ10BR003MR025	1	0.6	

Номера позиций данной спецификации соответствуют номерам блоков на листах 6, 7, 8.

Position numbers of this specification correspond with blocks numbers on Sheet 6, 7, 8.

Package Number 3 12 6 44
File: R37 KK34 31UQZ PUQ TW OK WD001_09=0

Данный чертеж не подлежит размножению или передаче другим организациям и лицам без согласия АО "Мособлгидропроект"

This drawing is not to be reproduced or transferred to other organizations or private persons without approval of Joint-stock Company "Institute HYDROPROJECT"

Изм. Rev.	N уч. N pat.	Лист Sheet	N док. Doc. No	Подпись Signature	Дата Date
Утвердил Approved		Panov			
Н. контр. Inspector		Alfimova			
Разраб. Designed		Solodovnikova			

R37.KK34.31UQZ.PUQ.TW.OK.WD001

АЭС "КУДАНКУЛАМ" БЛОК 3
NPP "KUDANKULAM" UNIT 3

31UQZ
Система дренажа сбросных вод. Дренаж воды из туннелей в случае разрыва трубопровода
31UQZ
Drain water removal system. Water removal from tunnels in case of pipeline break

Спецификация блоков трубопроводов 30PUQ10BR003, 30PUQ20BR003
Specification of pipelines blocks 30PUQ10BR003, 30PUQ20BR003

Стадия Phase	Лист Sheet	Листов Sheets
WD	9	

Joint-stock Company "Institute HYDROPROJECT" Dedovsk 2018

Формат A1

Inv.Nr 28286 Date 20.08.2018

Orig. arch. Nr. 428 | Date 12.07.2018 | Replace arch. Nr.

ПРИНЦИПИАЛЬНАЯ СХЕМА ТРУБОПРОВОДОВ 30PUQ10BR005, BR006
SCHEMATIC DIAGRAM OF PIPELINES 30PUQ10BR005, BR006

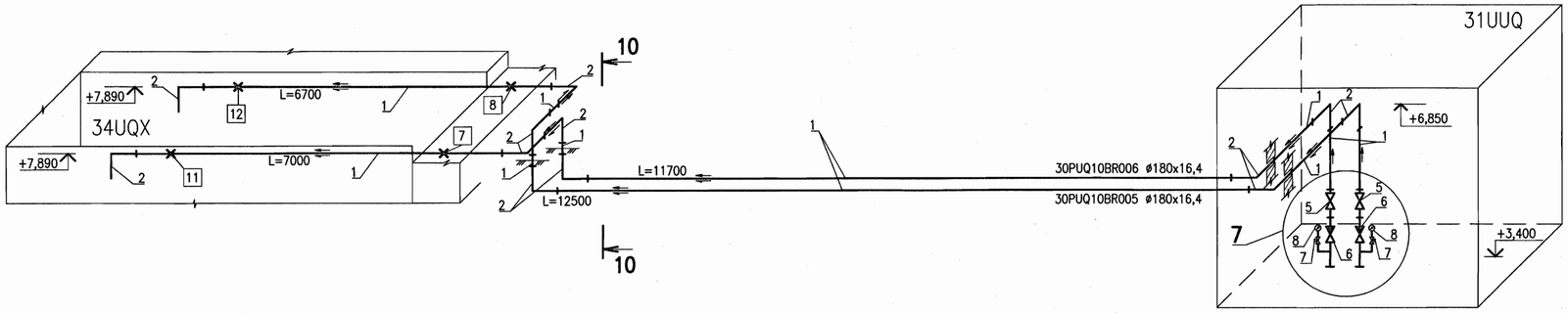

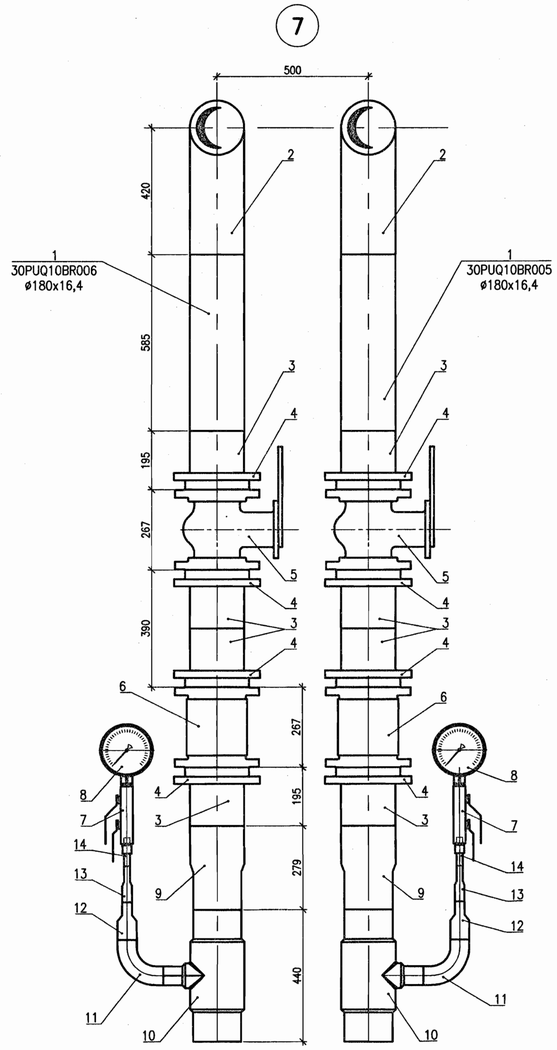

РАЗРЕЗ 10–10
SECTION 10–10

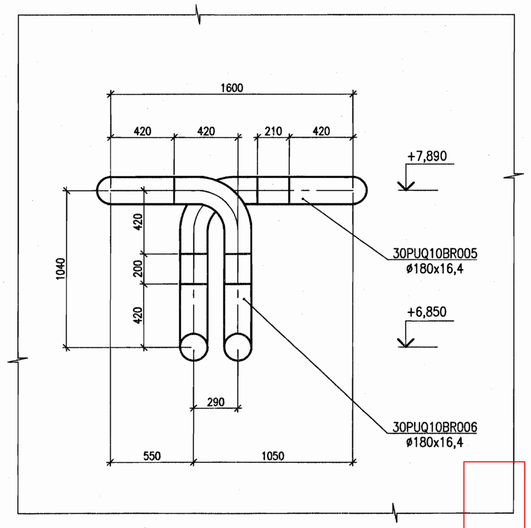

СПЕЦИФИКАЦИЯ ТРУБОПРОВОДОВ 30PUQ10BR005, BR006
SPECIFICATION OF PIPELINES 30PUQ10BR005, BR006

Поз. Pos	Обозначение Designation	Наименование Name of Block	Кол. Q-ty	Масса ед., кг Unit weight, kg	Примечание Note
1	ISO 4427	Труба 180x16,4 PE100&SDR11 / NDPE ISO 4427 Pipe 180x16,4 PE100&SDR11 / NDPE ISO 4427	40	8,4	метры metres
2	ISO 4427-3:2007	Отвод 90° d180 PE100 SDR11 Pipe-bend 90° d180 PE100 SDR11	12	4,4	шт. pcs.
3		Фланцевый адаптер d180 PE100 SDR11 Flanges adaptor d180 PE100 SDR11	8	–	шт. pcs.
4		Фланец стальной для фланцевого адаптера Flanges steel for flanges adapter	8	–	шт. pcs.
5	30PUQ10AA103 30PUQ10AA104	Двухстворчатый клапан DN150 ASME B16.34-2004 Butterfly valve 150NB Class150 ASME B16.34-2004	2	–	шт. pcs.
6	30PUQ10AA603 30PUQ10AA604	Поворотный обратный клапан DN150 ASME B16.34-2004 Swing check valve 150NB Class150 ASME B16.34-2004	2	–	шт. pcs.
7	30PUQ10AA301 30PUQ10AA302	Игольчатый вентиль DN10 ASME B16.34-2004 Needle valve 10NB Class150 ASME B16.34-2004	2	–	шт. pcs.
8	30PUQ10AA503 30PUQ10AA506	Мановакуумметр показывающий Combined pressure-and-vacuum gauge indicating	2	–	шт. pcs.
9		Переход редукционный 180x160 Reducer long 180x160 PE100 SDR11	2	–	шт. pcs.
10		Тройник 90° 160x63 PE100 SDR11 Tee 90° 160x63 PE100 SDR11	2	–	шт. pcs.
11		Отвод 90° d63 Pipe-bend 90° d63 PE100 SDR11	2	–	шт. pcs.
12		Переход редукционный 63x32 Reducer long 63x32 PE100 SDR11	2	–	шт. pcs.
13		Переход редукционный 32x20 Reducer long 32x20 PE100 SDR11	2	–	шт. pcs.
14		Переход 20-G1/2 ПЭ-сталь с наружной резьбой Transition long 20-G1/2 male-thread-con	2	–	шт. pcs.

СХЕМА РАСПОЛОЖЕНИЯ
KEY PLAN

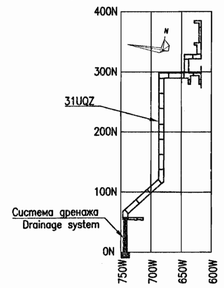

Package Number 3 12 6 44
File: R37 KK34 31UQZ PUQ TW OK WD001_10=0

Данный чертеж не подлежит размножению или передаче другим организациям и лицам без согласия АО "Мособлгидропроект"

This drawing is not to be reproduced or transferred to other organizations or private persons without approval of Joint-stock Company "Institute HYDROPROJECT"

Изм. Rev.	N уч. N pat.	Лист Sheet	N док. Doc. No	Подпись Signature	Дата Date
Утвердил Approved	Panov				17.8
Н. контр. Inspector	Alfimova				07.7.18
Разраб. Designed	Solodovnikova				7.8

R37.KK34.31UQZ.PUQ.TW.OK.WD001

АЭС "КУДАНКУЛАМ" БЛОК 3
NPP "KUDANKULAM" UNIT

31UQZ
Система дренажа сбросных вод. Дренаж воды из туннелей в случае разрыва трубопровода
31UQZ
Drain water removal system. Water removal from tunnels in case of pipeline break

Принципиальная схема трубопроводов 30PUQ10BR005, BR006, разрез 10–10, узел 7, спецификация трубопроводов 30PUQ10BR005, BR006
Schematic diagram of pipelines 30PUQ10BR005, BR006, section 10–10, unit 7, specification of pipelines 30PUQ10BR005, BR006

Стадия Phase	Лист Sheet	Листов Sheets
WD	10	

Joint-stock Company "Institute HYDROPROJECT" Dodovsk 2018

Формат A1

Инв. № подл. | Подпись и дата | Взам. инв. №
428 | 12.07.2018

Inv.Nr 28286 Date 20.08.2018

ПРИНЦИПИАЛЬНАЯ СХЕМА ТРУБОПРОВОДОВ 30PUQ20BR005, BR006
SCHEMATIC DIAGRAM OF PIPELINES 30PUQ20BR005, BR006

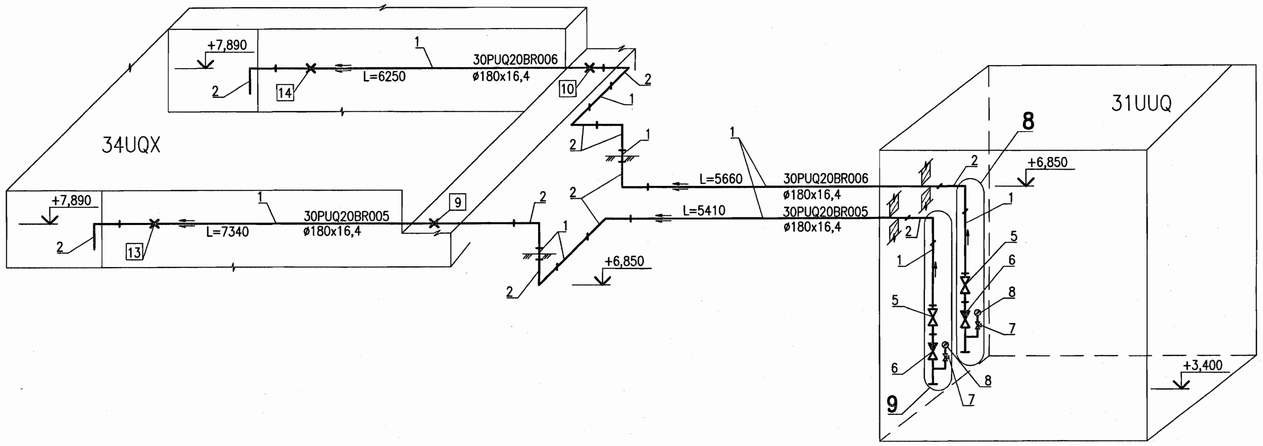

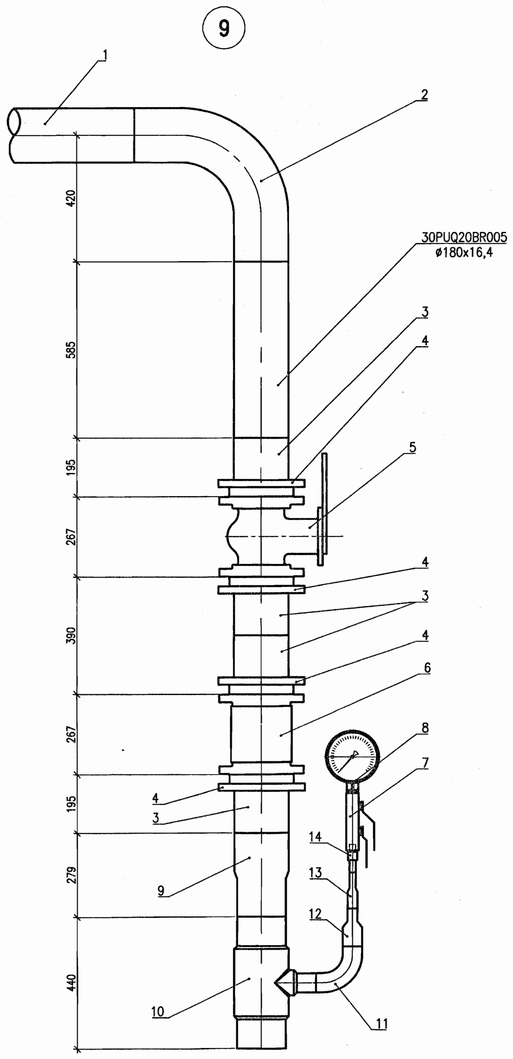

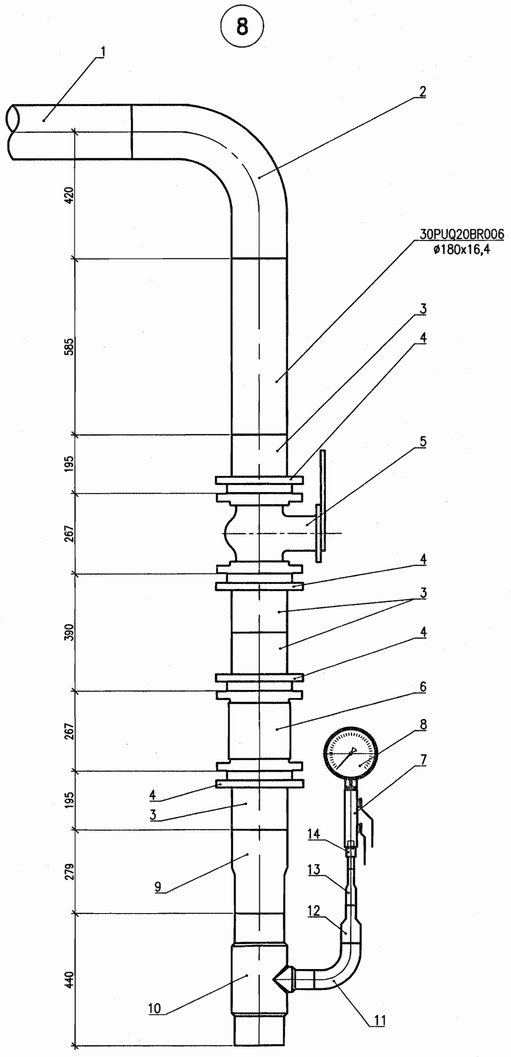

СПЕЦИФИКАЦИЯ ТРУБОПРОВОДОВ 30PUQ20BR005, BR006
SPECIFICATION OF PIPELINES 30PUQ20BR005, BR006

Поз. Pos	Обозначение Designation	Наименование Name of Block	Кол. Q-ty	Масса ед., кг Unit weight, kg	Примечание Note
1	ISO 4427	Труба 180x16,4 PE100-SDR11 NDPE ISO 4427 Pipe 180x16,4 PE100-SDR11 NDPE ISO 4427	25	8,4	метры metres
2	ISO 4427-3:2007	Отвод 90° d180 PE100 SDR11 Pipe-bend 90° d180 PE100 SDR11	11	4,4	шт. pcs.
3		Фланцевый адаптер d180 PE100 SDR11 Flanges adaptor d180 PE100 SDR11	8	–	шт. pcs.
4		Фланец стальной для фланцевого адаптера Flanges steel for flanges adapter	8	–	шт. pcs.
5	30PUQ20AA103 30PUQ20AA104	Дбустворчатый клапан DN150 ASME B16.34-2004 Butterfly valve 150NB Class150 ASME B16.34-2004	2	–	шт. pcs.
6	30PUQ20AA603 30PUQ20AA604	Поворотный обратный клапан DN150 ASME B16.34-2004 Swing check valve 150NB Class150 ASME B16.34-2004	2	–	шт. pcs.
7	30PUQ20AA301 30PUQ20AA302	Игольчатый вентиль DN10 ASME B16.34-2004 Needle valve 10NB Class150 ASME B16.34-2004	2	–	шт. pcs.
8	30PUQ20AA503 30PUQ20AA506	Мановакуумметр показывающий Combined pressure-and-vacuum gauge indicating	2	–	шт. pcs.
9		Переход редукционный 180x160 Reducer long 180x160 PE100 SDR11	2	–	шт. pcs.
10		Тройник 90° 160x63 PE100 SDR11 Tee 90° 160x63 PE100 SDR11	2	–	шт. pcs.
11		Отвод 90° d63 Pipe-bend 90° d63 PE100 SDR11	2	–	шт. pcs.
12		Переход редукционный 63x32 Reducer long 63x32 PE100 SDR11	2	–	шт. pcs.
13		Переход редукционный 32x20 Reducer long 32x20 PE100 SDR11	2	–	шт. pcs.
14		Переход 20-G1/2 ПЭ-сталь с наружной резьбой Transition long 20-G1/2 male-thread-con	2	–	шт. pcs.

СХЕМА РАСПОЛОЖЕНИЯ
KEY PLAN

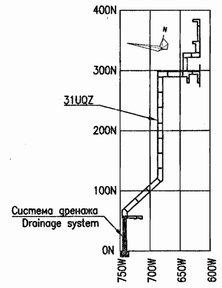

Package Number 3 12 6 44
File: R37 KK34 31UQZ PUQ TW OK WD001_11=0

Данный чертеж не подлежит размножению или передаче другим организациям и лицам без согласия АО "Мособлгидропроект"

This drawing is not to be reproduced or transferred to other organizations or private persons without approval of Joint-stock Company "Institute HYDROPROJECT"

Изм. Rev.	N уч. N pat.	Лист Sheet	N док. Doc. No	Подпись Signature	Дата Date
Утвердил Approved		Panov			27.12
Н. контр. Inspector		Alfimova			07.12
Разраб. Designed		Solodovnikova			27.12

R37.KK34.31UQZ.PUQ.TW.OK.WD001

АЭС "КУДАНКУЛАМ" БЛОК 3
NPP "KUDANKULAM" UNIT 3

31UQZ
Система дренажа сбросных вод. Дренаж воды из туннелей 0 случае разрыва трубопровода 31UQZ
Drain water removal system. Water removal from tunnels in case of pipeline break

Принципиальная схема трубопроводов 30PUQ20BR005, BR006, узлы 8, 9, спецификация трубопроводов 30PUQ20BR005, BR006
Schematik diagram of pipelines 30PUQ20BR005, BR006, units 8, 9, specification of pipelines 30PUQ20BR005, BR006

Стадия Phase	Лист Sheet	Листов Sheets
WD	11	

Joint-stock Company "Institute HYDROPROJECT" Dedovsk 2018

Формат A1

Inv.Nr 28286 Date 20.08.2018

Отиг. arch. Nr.	Date	Replace arch. Nr
428 - 4	12. 07. 2018	

ВЕДОМОСТЬ РАБОЧИХ ЧЕРТЕЖЕЙ ОСНОВНОГО КОМПЛЕКТА
LIST OF THE WORKING DRAWINGS OF MAIN SET

Лист Sheet	Наименование Description	Примечание Note
1	Общие данные General data	
2	Схема принципиальная Schematic diagram	
3	План разбивки трубопроводов 30PUQ30BR001, 30PUQ30BR002, 30PUQ40BR001, 30PUQ40BR002 на блоки, разрезы 1–1...4–4 Block division plan of pipelines 30PUQ30BR001, 30PUQ30BR002, 30PUQ40BR001, 30PUQ40BR002, section 1–1...4–4	
4	План расстановки опор на трубопроводах 30PUQ30(40)BR001, спецификация блоков трубопроводов 30PUQ30(40)BR001, 30PUQ30(40)BR002 Layout of supports on the pipelines 30PUQ30(40)BR001, blocks specification of pipelines 30PUQ30(40)BR001, 30PUQ30(40)BR002	
5	План разбивки трубопроводов 30PUQ30(40)BR003, 30PUQ30(40)BR004, 30PUQ30(40)BR005, 30PUQ30(40)BR006 на блоки, разрез 1–1, узлы 1, 2 Block division plan of pipelines 30PUQ30(40)BR003, 30PUQ30(40)BR004, 30PUQ30(40)BR005, 30PUQ30(40)BR006, section 1–1, units 1, 2	
6	Разрезы 2–2, 3–3 Sections 2–2, 3–3	
7	Разрезы 4–4...13–13, узлы 3...6 Sections 4–4...13–13, units 3...6	
8	Спецификация блоков трубопроводов 30PUQ30(40)BR003, 30PUQ30(40)BR004 Specification of pipelines blocks 30PUQ30(40)BR003, 30PUQ30(40)BR004	
9	Принципиальная схема трубопроводов 30PUQ30BR005, 30PUQ30BR006, узел 7, спецификация трубопроводов 30PUQ30BR005, 30PUQ30BR006 Schematik diagram of pipelines 30PUQ30BR005, 30PUQ30BR006 unit 7, specification of pipelines 30PUQ30BR005, 30PUQ30BR006	
10	Принципиальная схема трубопроводов 30PUQ40BR005, 30PUQ40BR006, узлы 8, 9, спецификация трубопроводов 30PUQ40BR005, 30PUQ40BR006 Schematik diagram of pipelines 30PUQ40BR005, 30PUQ40BR006, units 8, 9, specification of pipelines 30PUQ40BR005, 30PUQ40BR006	
11	Установка опор трубопроводов Installation of pipelines supports	
12	Блоки 30PUQ30BR001MR001 Blocks 30PUQ30BR001MR001	
13	Блок 30PUQ30BR001MR002, 003 Block 30PUQ30BR001MR002, 003	
14	Блок 30PUQ30BR001MR004 Block 30PUQ30BR001MR004	
15	Блок 30PUQ30BR001MR006 Block 30PUQ30BR001MR006	
16	Блоки 30PUQ30BR001MR007 Blocks 30PUQ30BR001MR007	
17	Блоки 30PUQ30BR002MR009 Blocks 30PUQ30BR002MR009	
18	Блоки 30PUQ40BR001MR010, 012, 014, 016 Blocks 30PUQ40BR001MR010, 012, 014, 016	
19	Блок 30PUQ40BR001MR011 Block 30PUQ40BR001MR011	
20	Блок 30PUQ40BR001MR013 Block 30PUQ40BR001MR013	
21	Блок 30PUQ40BR001MR015 Block 30PUQ40BR001MR015	
22	Блок 30PUQ40BR001MR017 Block 30PUQ40BR001MR017	
23	Блок 30PUQ40BR001MR019 Block 30PUQ40BR001MR019	
24	Блок 30PUQ40BR001MR020 Block 30PUQ40BR001MR020	
25	Блок 30PUQ40BR002MR022 Block 30PUQ40BR002MR022	
26	Блок 30PUQ30BR003MR001 Block 30PUQ30BR003MR001	
27	Блоки 30PUQ30BR003MR002, 004, 008, 012, 014, 018, 020, 022, 024 Blocks 30PUQ30BR003MR002, 004, 008, 012, 014, 018, 020, 022, 024	
28	Блок 30PUQ30BR003MR003 Block 30PUQ30BR003MR003	
29	Блоки 30PUQ30BR003MR005, 007, 009 Blocks 30PUQ30BR003MR005, 007, 009	
30	Блок 30PUQ30BR003MR011 Block 30PUQ30BR003MR011	
31	Блок 30PUQ30BR003MR013 Block 30PUQ30BR003MR013	
32	Блоки 30PUQ30BR003MR015, 016 Blocks 30PUQ30BR003MR015, 016	
33	Блок 30PUQ310BR003MR017 Block 30PUQ30BR003MR017	
34	Блок 30PUQ30BR003MR019 Block 30PUQ30BR003MR019	
35	Блок 30PUQ30BR003MR021 Block 30PUQ30BR003MR021	
36	Блок 30PUQ30BR003MR023 Block 30PUQ30BR003MR023	
37	Блок 30PUQ30BR003MR025 Block 30PUQ30BR003MR025	
38	Блок 30PUQ10BR004MR026 Block 30PUQ10BR004MR026	
39	Блоки 30PUQ30BR004MR027, 033, 035, 039, 041, 043, 045 Blocks 30PUQ30BR004MR027, 033, 035, 039, 041, 043, 045	
40	Блок 30PUQ30BR004MR028 Block 30PUQ30BR004MR028	
41	Блок 30PUQ30BR004MR030 Block 30PUQ30BR004MR030	
42	Блок 30PUQ30BR004MR032 Block 30PUQ30BR004MR032	
43	Блок 30PUQ30BR004MR034 Block 30PUQ30BR004MR034	
44	Блоки 30PUQ30BR004MR036, 037 Blocks 30PUQ30BR004MR036, 037	
45	Блок 30PUQ30BR004MR038 Block 30PUQ30BR004MR038	
46	Блок 30PUQ30BR004MR040 Block 30PUQ30BR004MR040	
47	Блок 30PUQ30BR004MR042 Block 30PUQ30BR004MR042	
48	Блок 30PUQ30BR004MR044 Block 30PUQ10BR004MR044	
49	Блок 30PUQ30BR004MR046 Block 30PUQ30BR004MR046	
50	Блок 30PUQ40BR003MR047 Block 30PUQ40BR003MR047	
51	Блоки 30PUQ40BR003MR048, 050, 054, 058, 061, 063, 065, 067 Blocks 30PUQ40BR003MR048, 050, 054, 058, 061, 063, 065, 067	
52	Блок 30PUQ40BR003MR049 Block 30PUQ40BR003MR049	
53	Блоки 30PUQ40BR003MR051, 055 Blocks 30PUQ40BR003MR051, 055	
54	Блоки 30PUQ40BR003MR053, 057 Blocks 30PUQ40BR003MR053, 057	
55	Блок 30PUQ40BR003MR059 Block 30PUQ40BR003MR059	
56	Блок 30PUQ40BR003MR060 Block 30PUQ40BR003MR060	
57	Блок 30PUQ40BR003MR062 Block 30PUQ40BR003MR062	
58	Блок 30PUQ40BR003MR064 Block 30PUQ40BR003MR064	
59	Блок 30PUQ40BR003MR066 Block 30PUQ40BR003MR066	
60	Блок 30PUQ40BR003MR068 Block 30PUQ40BR003MR068	
61	Блок 30PUQ40BR004MR069 Block 30PUQ40BR004MR069	
62	Блоки 30PUQ40BR004MR071, 073 Blocks 30PUQ40BR004MR071, 073	
63	Блоки 30PUQ40BR004MR072, 076, 078, 080, 082, 084 Blocks 30PUQ40BR004MR072, 076, 078, 080, 082, 084	
64	Блок 30PUQ40BR004MR075 Block 30PUQ40BR004MR075	
65	Блок 30PUQ40BR004MR077 Block 30PUQ40BR004MR077	
66	Блок 30PUQ40BR004MR079 Block 30PUQ40BR004MR079	
67	Блок 30PUQ40BR004MR081 Block 30PUQ40BR004MR081	
68	Блок 30PUQ40BR004MR083 Block 30PUQ40BR004MR083	
69	Блок 30PUQ40BR004MR085 Block 30PUQ40BR004MR085	
70	План на отм. –0,600, разрезы 1–1...4–4, узел А, спецификация Plan at elev. –0,600, section 1–1...4–4, unit A, specification	

ВЕДОМОСТЬ СПЕЦИФИКАЦИЙ
SPECIFICATION LIST

Лист Sheet	Наименование Description	Примечание Note
4	Спецификация блоков трубопроводов 30PUQ30BR001, 30PUQ40BR002, 30PUQ30BR001, 30PUQ40BR002 Blocks specification of pipelines 30PUQ30BR001, 30PUQ40BR002, 30PUQ30BR001, 30PUQ40BR002	
8	Спецификация блоков трубопроводов 30PUQ30BR003, 30PUQ30BR004, 30PUQ40BR003, 30PUQ40BR004 Blocks specification of pipelines 30PUQ30BR003, 30PUQ30BR004, 30PUQ40BR003, 30PUQ40BR004	
9	Спецификация блоков трубопроводов 30PUQ30BR005, 30PUQ30BR006 Blocks specification of pipelines 30PUQ30BR005, 30PUQ30BR006	
10	Спецификация блоков трубопроводов 30PUQ40BR005, 30PUQ40BR006 Blocks specification of pipelines 30PUQ40BR005, 30PUQ40BR006	

ВЕДОМОСТЬ ССЫЛОЧНЫХ И ПРИЛАГАЕМЫХ ДОКУМЕНТОВ
LIST OF REFERENCE AND ATTACHED DOCUMENTS

Обозначение Designation	Наименование Name	Примечание Note
Ссылочные документы Reference documents		
R37.KK34.32UQZ.PEB.TW.OK.WD001	32UQZ. Металлические конструкции трубопроводов ответственных потребителей 32UQZ. Metalwork Pipelines of essential services	
R37.KK34.32UQZ.0.KZ.OK.WD001	32UQZ. Строительные конструкции. Геометрия 32UQZ. Structures. Geometry	
R37.KK34.31UUP.0.AR.OK.WD001	Вентцентры туннелей трубопроводов ответственных потребителей. 31–37 UUP. Архитектурные решения Vent centers of Tunnels of pipelines essential consumers. 31–37 UUP. Architectural solutions	
R28.KK34.32UQX.0.KZ.OK.WD001	32UQX, 33UQX. Строительные конструкции. Геометрия 32UQX, 33UQX. Structures. Geometry	

ТЕХНИЧЕСКАЯ ХАРАКТЕРИСТИКА И СВОДКА МАСС ТРУБОПРОВОДОВ
PERFORMANCE AND WEIGHT DATA OF PIPELINES

Обозначение трубопровода Pipeline designation	Наименование транспортируемого продукта Description of transported matter	Подведомственность Subject to	Рабочие условия трубопровода / Pipeline operating conditions: Давление, МПа Pressure, MPa	Температура, °С Temperature, °C	Условия гидроиспытаний / Hydraulic test conditions: Давление, МПа Pressure, MPa	Минимальная температура стенки, °С Minimal temperature of pipe wall, °C	Диаметр и толщина стенки трубопровода Dxs, мм Diameter and thickness of pipe wall Dxs, mm	Масса трубопроводов, кг / Pipeline weight, kg: Общая Total	В том числе / Including: Трубопровода Pipeline weight	Опор Support weight	Арматуры Reinforcement weight
30PUQ30BR001	Морская вода Sea water	ПНАЭ Г-7-008-89 PNAE G-7-008-89	0,6	32	1,0	19	219,1x7,04	505,2	493,4	11,8	*
30PUQ30BR002			0,3	38	0,6			26,9	26,9	–	*
30PUQ40BR001			0,6	32	1,0			997,8	980,1	17,7	*
30PUQ40BR002			0,3	38	0,6			26,9	26,9	–	*
30PUQ30BR003		ПНАЭ Г-7-008-89 PNAE G-7-008-89	0,3	38	0,6	19	89x3	111,8	110,7	1,1	*
30PUQ30BR004								105,9	104,8	1,1	*
30PUQ40BR003								75,3	73,2	2,1	*
30PUQ40BR004								66,3	64,2	2,1	*
30PUQ30BR005		ПНАЭ Г-7-008-89 PNAE G-7-008-89	0,3	38	0,6	19	180x16,4	173,3	169,2	4,1	*
30PUQ30BR006								202,9	198,8	4,1	*
30PUQ40BR005								177,5	173,4	4,1	*
30PUQ40BR006								202,7	198,6	4,1	*

* Вес арматуры уточняется при выборе поставщика.
* The weight of reinforcement is specified when selecting a supplier.

МЕТОДЫ И ОБЪЕМЫ КОНТРОЛЯ СВАРНЫХ СОЕДИНЕНИЙ
METHODS AND DEGREE OF INSPECTION OF WELDED JOINTS

Номер трубопровода Pipeline number	Категория сварных соединений или категория трубопровода Category of welded joints or category of pipeline	Номинальная толщина свариваемых деталей, мм Nominal thickness of welded parts, mm	Неразрушающего, % / Non-destructive, %: Визуального и измерительного Visual and measuring inspection	Гидравлические испытания Hydraulic test	Капилярного или магнитопорошкового Capillary or magnetic particle inspection	Радиографического Radiographic inspection	Ультразвукового Ultrasonic inspection	Подзонка металлическим калибром Run with metal pass	Контроль герметичности Leakproofness test	Разрушающего / Destructive: Определение механических свойств Determination of stress-strain properties	Металлографические исследования Metallographic examination	Испытания на стойкость к межкристаллитной коррозии Intercrystalline corrosion proofness test
30PUQ30BR003	IIв	3	100	100	100	50	50	–	–	–	–	–
30PUQ30BR004												
30PUQ40BR003												
30PUQ40BR004												

ХИМИЧЕСКИЙ СОСТАВ МОРСКОЙ ВОДЫ
CHEMICAL COMPOSITION OF SEA WATER

	Название Element	Величина Valne	Примечание Note
1	Кальций, мг/л Calcium, mg/l	360...420	
2	Магний, мг/л Magnesium, mg/l	1248...1322	
3	Натрий, мг/л Sodium, mg/l	7500...8500	
4	Калий, мг/л Potassium, mg/l	390...415	
5	Гидрокарбонаты, мг/л Hydrocarbonates, mg/l	73,2...109,8	
6	Карбонаты, мг/л Carbonates, mg/l	67,2...76,8	
7	Сульфаты, мг/л Sulphates, mg/l	2709...2761	
8	Хлориды, мг/л Chlorides, mg/l	19500	
9	Общее содержание, % General salt content, %	3,6000	
10	Жесткость (CaC_3), мг/л	6500	
11	Водородный показатель pH pH value	8	
12	Нерастворимые вещества, мг/л Insaluble matters, mg/l	20	
13	Биологические данные, мг/100 м³ Biological assay data, mg/100 m³	70	

УСЛОВНЫЕ ОБОЗНАЧЕНИЯ
LEGEND

	Граница проектирования Design boundary
	Переход Adapter
	Спуск воды из трубопровода Water discharge from pipeline
	Соединение трубопроводов Connection of pipeline
	Соединение трубопроводов отсутствует No connection of pipeline
5	Порядковый номер скользящей опоры Sequence number of sliding support
1	Порядковый номер неподвижной опоры Sequence number of fixed support
105	Порядковый номер блока трубопровода Sequence number of pipeline block
	Направление движения среды Medium motion direction
	Рукав напорный Delivery hose
	Игольчатый вентиль Needle valve
	Двустворчатый клапан Butterfly valve
	Затвор обратный Check valve
	Граница блока Limit of block
	Точка контроля и обозначение измеряемого параметра Check point and designation of the parameter to be measured

ОБЩИЕ УКАЗАНИЯ

1 Рабочие чертежи разработаны в соответствии с контрактом No77–258/1415800 на разработку рабочей документации.

2 Рабочая документация разработана в соответствии с Российскими нормативными документами, действующими на 15.05.2009.

3 Классификация элементов трубопроводов:

трубопроводы опорожнения PEB (ø219,1x7,04):
- класс безопасности 2 по НП–001–97 (ПНАЭ Г–01–011–97) "Общие положения обеспечения безопасности атомных станций." ОПБ–88/97;
- группа В по ПНАЭ Г–7–008–89 "Правила устройства и безопасной эксплуатации оборудования и трубопроводов атомных энергетических установок";
- категория сейсмостойкости I по НП–031–01 "Нормы проектирования сейсмостойких атомных станций";

трубопроводы дренажа туннелей (ø89x3):
- класс безопасности 3 по НП–001–97 (ПНАЭ Г–01–011–97) "Общие положения обеспечения безопасности атомных станций." ОПБ–88/97;
- группа С, категория V по СН 527–80 "Инструкция по проектированию технологических стальных трубопроводов Ру до 10 МПа";
- категория сейсмостойкости I по НП–031–01 "Нормы проектирования сейсмостойких атомных станций";

трубопроводы осушения туннелей (ø180x16,4):
- класс безопасности 4 по НП–001–97 (ПНАЭ Г–01–011–97) "Общие положения обеспечения безопасности атомных станций." ОПБ–88/97;
- категория сейсмостойкости II по НП–031–01 "Нормы проектирования сейсмостойких атомных станций";

4 Толщина труб принята по расчету на внутреннее давление воды с учетом увеличения толщины стенки труб на величину коррозии стенок труб в течении всего периода эксплуатации.

5 Опорожнение трубопроводов PEB предусматривается через дренажные узлы, которые устанавливаются в нижних точках трубопроводов со сбросом воды в специально предусмотреные дренажные приямки в туннелях UQZ.

Диаметр дренажных узлов принят из условия самотечного опорожнения трубопроводов в течение двух часов.

Трубопроводы опорожнения PEB прокладываются в туннелях 32UQZ с уклоном в сторону слива воды в приямки. Величина уклона трубопроводов определяется величиной уклона дна туннелей.

6 Дренаж туннелей и сброс воды при опорожнении трубопроводов PEB в сифонный колодец 33UQX осуществляется артезианскими насосами, всасывающие патрубки которых находятся в дренажных приямках.

7 Осушение туннелей в случае разрыва трубопровода предусматривается переносными погружными насосами со сбросом откачиваемой воды в отводящий канал 31UQN.

8 Трубопроводы дренажа и трубопроводы осушения туннелей прокладываются в помещении 31UUP, в земле и по территории сифонного колодца 33UQX.

9 Компенсация температурных удлинений осуществляется за счет естественных углов поворота трассы трубопроводов.

Все усилия и моменты, возникающие от сочетания действующих нагрузок (осевых, боковых и весовых), воспринимаются неподвижными опорами.

10 Монтаж трубопроводов опорожнения PEB осуществляется из блоков с фланцевыми соединениями. Трубопроводы изготавливаются из углеродистой стали по ASME–SA–106 Gr.B. Фитинги и фланцы изготавливаются из углеродистой стали по ASME–SA–105.

Монтаж трубопроводов дренажа туннелей и трубопроводов осушения туннелей осуществляется из блоков на сварке. Трубопроводы 89x3 изготавливаются из титанового сплава. Трубопроводы 180x16,4 изготавливаются из полиэтилена.

Сборка трубопроводов осуществляется непосредственно на стройке из деталей (трубы, отводы, фланцы блоков).

11 Сварные соединения по ПНАЭ Г–7–010–89 "Оборудование и трубопроводы атомных энергетических установок. Сварные соединения и наплавки. Правила контроля" для трубопроводов дренажа туннелей относятся к категории II, подкатегории IIв.

12 Контроль качества сварных соединений по ПНАЭ Г–7–010–89 "Оборудование и трубопроводы атомных энергетических установок. Сварные соединения и наплавки. Правила контроля".

13 Торцевая сварка элементов полиэтиленовых трубопроводов выполняется сварочным аппаратом, оснащенным гидравлическим приводом с ЧПУ с блоком протоколирования.

14 Трубопроводы опорожнения PEB монтируются с обязательным устройством антикоррозийного защитного покрытия внутренней и наружной поверхности труб от влияния морской воды, грунта и кислорода воздуха в соответствии с техническими требованиями R28.KK34.0.0.TW.TT.WD002.

Данные работы выполняются отдельными проектами и в состав данного комплекта рабочей документации не входят.

15 Строительная часть выполняется по чертежам пакетов 3 9 2 17.

GENERAL GUIDELINES

1 The working drawings have been developed in accordance with basic provisions of the Contract No77–258/1415800 on elaboration of working documentation.

2 Working documents have been worked out in compliance with the Russian regulatory documents in force as on 15.05.2009.

3 Classification of pipelines elements:

emptying pipelines PEB (ø219,1x7,04):
- safety class 2 NP–001–97 (PNAE G–01–011–97) "General regulations on safety assurance at Nuclear power plants". OPB – 88/97;
- group B as per PNAE G–7–008–89 "Regulations on arrangement and safe operation of equipment and pipelines at Nuclear power plants";
- seismic stability category I in conformity with NP–031–01 "Design Standarts for aseismic nuclear power stations";

pipelines for drainage of tunnels (ø89x3):
- safety class 3 NP–001–97 (PNAE G–01–011–97) "General regulations on safety assurance at Nuclear power plants". OPB – 88/97;
- group C, category V as per SN 527–80 "Instruction on designing of steel technological pipelines Py up to 10 MPa;
- seismic stability category I in conformity with NP–031–01 "Design Standarts for aseismic nuclear power stations";

pipelines for drying–out of tunnels (ø180x16,4):
- safety class 4 NP–001–97 (PNAE G–01–011–97) "General regulations on safety assurance at Nuclear power plants". OPB – 88/97;
- seismic stability category II in conformity with NP–031–01 "Design Standarts for aseismic nuclear power stations";

4 Thickness of pipes is accepted rating the internal pressure of water considering increase of pipe wall thickness to pipe walls corrosion value during the whole period of operation.

5 Pipelines PEB emptying is to be executed through drain units that should be placed in lower points of pipelines and imply water discharge to the drainage pits in the tunnels UQZ.

Drainage units diameter is accepted due to pipelines gravity emptying within two hours.

Emptying pipelines PEB are to be laid out in tunnels 32UQZ on the slope towards water discharge into the pits. Pipelines gradient is determined by the tunnel floor slope.

6 Tunnels drainage and water discharge at emptying of PEB pipelines into the siphon well 33UQX is carried out by artesian pumps, suction tubes of which are placed in the drainage pits.

7 Tunnels drying–out in case of pipeline break is to be carried out by portable submerged–type pumps with drainage water discharge into the outlet canal 31UQN.

8 Drainage and drying–out pipelines are to be laid in compartment 31UUP, in the ground and in the territory of the siphon well 33UQX.

9 Temperature rolling–out compensation is carried out due to natural turning angle of pipeline route.

All the forces and moments appeared from load combination (axial load, side load and weight load) are sustained by fixed supports.

10 Placing of emptying pipelines PEB is to be carried out of blocks by flange connections. Pipelines are made of carbon steel ASME–SA–106 Gr.B. The fittings and the flanges are made of carbon steel in accordance with ASME–SA–105.

Placing of drainage and drying–out pipelines is to be carried out of blocks at welding. Pipelines 89x3 are made of titanium alloy. Pipelines 180x16,4 are made of NDPE.

Assembly of pipelines is carried out directly at site of parts (pipes, pipe bends, flanges of blocks).

11 Welding joints are as per PNAE G–7–010–89 "Equipment and pipelines for Nuclear power plants. Welding joints and depositions. Rules of control" for drainage of tunnels are related to category II, subcategory IIb.

12 Welding joints quality control is as per PNAE G–7–010–89 "Equipment and pipelines for Nuclear power plants. Welding joints and depositions. Rules of control".

13 End welding of polyethylene pipeline elements is performed by a welding machine equipped with a hydraulic CNC drive with a logging unit.

14 Pipelines PEB emptying are to be laid using anticorrosion protection coating of internal and external surfaces of pipes from sea water, ground and atmospheric oxygen impact in accordance with the technical requirements of R28.KK34.0.0.TW.TT.WD002.

The given works are to be implemented by separate designs and are not in the scope of present set of working documentation.

15 Civil part is to be implemented on drawings of package 3 9 2 17.

СХЕМА РАСПОЛОЖЕНИЯ
KEY PLAN

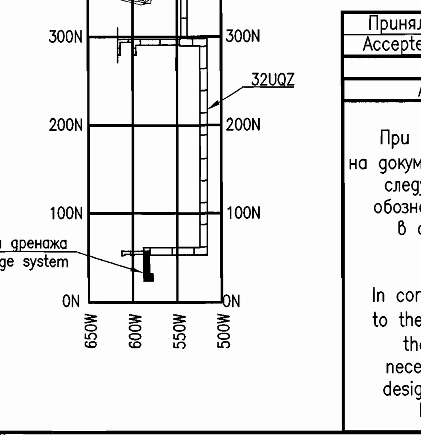

Package Number 3 12 6 44

File: R37 KK34 32UQZ PUQ TW OK WD001_01=0

Rev N	Issue N	Issued for	Signature	Issue sheet N

Принял / Accepted	Kats	
Arch. No		Date

FSUE "Atomenergoproekt" Moscow 2018

При переписке в ссылке на документ (лист документа) следует указывать его обозначение, приведенное в основной надписи

In correspondence referring to the document (sheet of the document) it is necessary to specify its designation, given in the basic inscription

Данный чертеж не подлежит размножению или передаче другим организациям и лицам без согласия АО "Мособлгидропроект"

This drawing is not to be reproduced or transferred to other organizations or private persons without approval of Joint–stock Company "Institute HYDROPROJECT"

NUCLEAR POWER CORPORATION OF INDIA LTD

R37.KK34.32UQZ.PUQ.TW.OK.WD001

АЭС "КУДАНКУЛАМ" БЛОК 3
NPP "KUDANKULAM" UNIT 3

Изм. Rev.	N уч. N pat.	Лист Sheet	N док. Doc. No	Подпись Signature	Дата Date
Утвердил / Approved		Togoev			07.18
Н. контр. / Inspector		Alfimova			07.18
Разраб. / Designed		Panov			07.18

32UQZ
Система дренажа сбросных вод. Дренаж воды из туннелей в случае разрыва трубопровода
32UQZ
Drain water removal system. Water removal from tunnels in case of pipeline break

Стадия Phase	Лист Sheet	Листов Sheets
WD	1	70

Общие данные
General data

Joint-stock Company "Institute HYDROPROJECT" Dedowsk 2018

формат A2x4

Inv. Nr. 28285 Date 20.08.2018

Orig. arch. Nr.	Date	Replace arch. Nr
429	13.07.2018	

СХЕМА ПРИНЦИПИАЛЬНАЯ
SCHEMATIC DIAGRAM

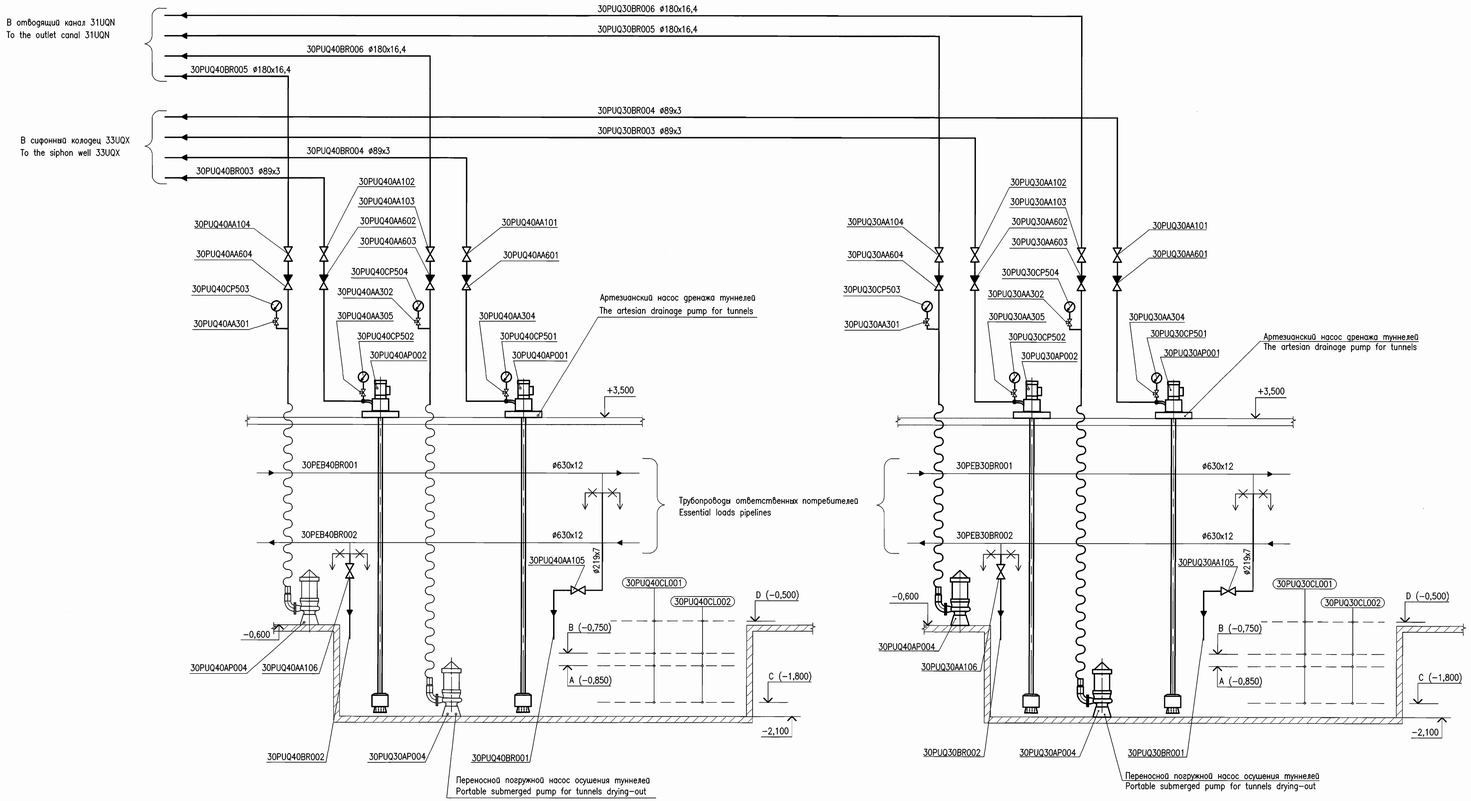

A – Включение первого насоса
Actuation of the first pump
B – Включение второго насоса
Actuation of the second pump
C – Отключение насосов
Switching-off of pumps
D – Включение аварийного сигнала затопления
Actuation of the emergency flooding signal

ПЕРЕЧЕНЬ ЭЛЕМЕНТОВ
LIST OF ELEMENTS

Поз. по СЗС Item as per specification of buildings and compartments	Код по системе KKS Code as per KKS	Наименование Name	Кол. Quant.	Примечание Note
	30PUQ30AP001 30PUQ30AP002 30PUQ40AP001 30PUQ40AP002	Агрегат насосный артезианского типа Artesian pump unit of type	4	Q=20 м³/ч H=0,3 МПа Q=20 m³/h H=0,3 MPa
	30PUQ30CP501 30PUQ30CP502 30PUQ40CP501 30PUQ40CP502	Манометр Pressure gauge	4	Комплектно с агрегатом насосным артезианского типа Complete with artesian pump unit
	30PUQ30AA304 30PUQ30AA305 30PUQ40AA304 30PUQ40AA305	Кран под манометр Pressure gauge valve	4	Комплектно с агрегатом насосным артезианского типа Complete with artesian pump unit
	30PUQ30AP004 30PUQ40AP004	Электронасос погружной Submerged pump	2	Q=180 м³/ч H=0,3 МПа Q=180 m³/h H=0,3 MPa
	30PUQ30AA103 30PUQ30AA104 30PUQ40AA103 30PUQ40AA104	Двустворчатый клапан Butterfly valve	4	DN 150 P 1,0 МПа DN 150 P 1,0 MPa
	30PUQ30AA105 30PUQ30AA106 30PUQ40AA105 30PUQ40AA106	Двустворчатый клапан Butterfly valve	4	DN 200 P 1,0 МПа DN 200 P 1,0 MPa
	30PUQ30AA101 30PUQ30AA102 30PUQ40AA101 30PUQ40AA102	Двустворчатый клапан Butterfly valve	4	DN 80 P 1,0 МПа DN 80 P 1,0 MPa
	30PUQ30AA603 30PUQ30AA604 30PUQ40AA603 30PUQ40AA604	Затвор обратный Check valve	4	DN 150 P 1,0 МПа DN 150 P 1,0 MPa
	30PUQ30AA601 30PUQ30AA602 30PUQ40AA601 30PUQ40AA602	Затвор обратный Check valve	4	DN 80 P 1,0 МПа DN 80 P 1,0 MPa
	30PUQ30CP503 30PUQ30CP504 30PUQ40CP503 30PUQ40CP504	Мановакуумметр показывающий Combined pressure-and-vacuum gauge indicating	4	
	30PUQ30AA301 30PUQ30AA302 30PUQ40AA301 30PUQ40AA302	Игольчатый вентиль Needle valve	4	DN 10 P 1,0 МПа DN 10 P 1,0 MPa
	30PUQ30CL001 30PUQ30CL002 30PUQ40CL001 30PUQ40CL002	Погружной датчик уровня Submersible Level Transmitter	4	

СХЕМА РАСПОЛОЖЕНИЯ
KEY PLAN

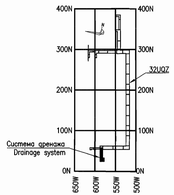

Package Number 3 12 6 44
File: R37 KK34 32UQZ PUQ TW OK WD001_02=0

Данный чертеж не подлежит размножению или передаче другим организациям и лицам без согласия АО "Мособлгидропроект"

This drawing is not to be reproduced or transferred to other organizations or private persons without approval of Joint-stock Company "Institute HYDROPROJECT"

Изм. N уч.	Лист N	док.	Подпись	Дата
Rev. N pat.	Sheet	Doc. No	Signature	Date
Утверди л Approved	Panov			09.19
Н. контр. Inspector	Alfimova			09.19
Разраб. Designed	Sokolovnikova			09.19

R37.KK34.32UQZ.PUQ.TW.OK.WD001

АЭС "КУДАНКУЛАМ" БЛОК 3
NPP "KUDANKULAM" UNIT 3

32UQZ
Система дренажа сбросных вод. Дренаж воды из туннелей в случае разрыва трубопровода 32UQZ
Drain water removal system. Water removal from tunnels in case of pipeline break

Схема принципиальная
Schematic diagram

Стадия	Лист	Листов
Phase	Sheet	Sheets
WD	2	

Joint-Stock Company "Institute HYDROPROJECT" Dubna 2018

Формат А2х3

Инв. N подл.	Подпись и дата	Взамен инв. N
4 2 9	11.09.2018	

Inv. Nr: 28285 Date 20.08.2018

ПЛАН РАЗБИВКИ ТРУБОПРОВОДОВ 30PUQ30BR001, 30PUQ30BR002, 30PUQ40BR001, 30PUQ40BR002 НА БЛОКИ.
BLOCK DIVISION PLAN OF PIPELINES 30PUQ30BR001, 30PUQ30BR002, 30PUQ40BR001, 30PUQ40BR002

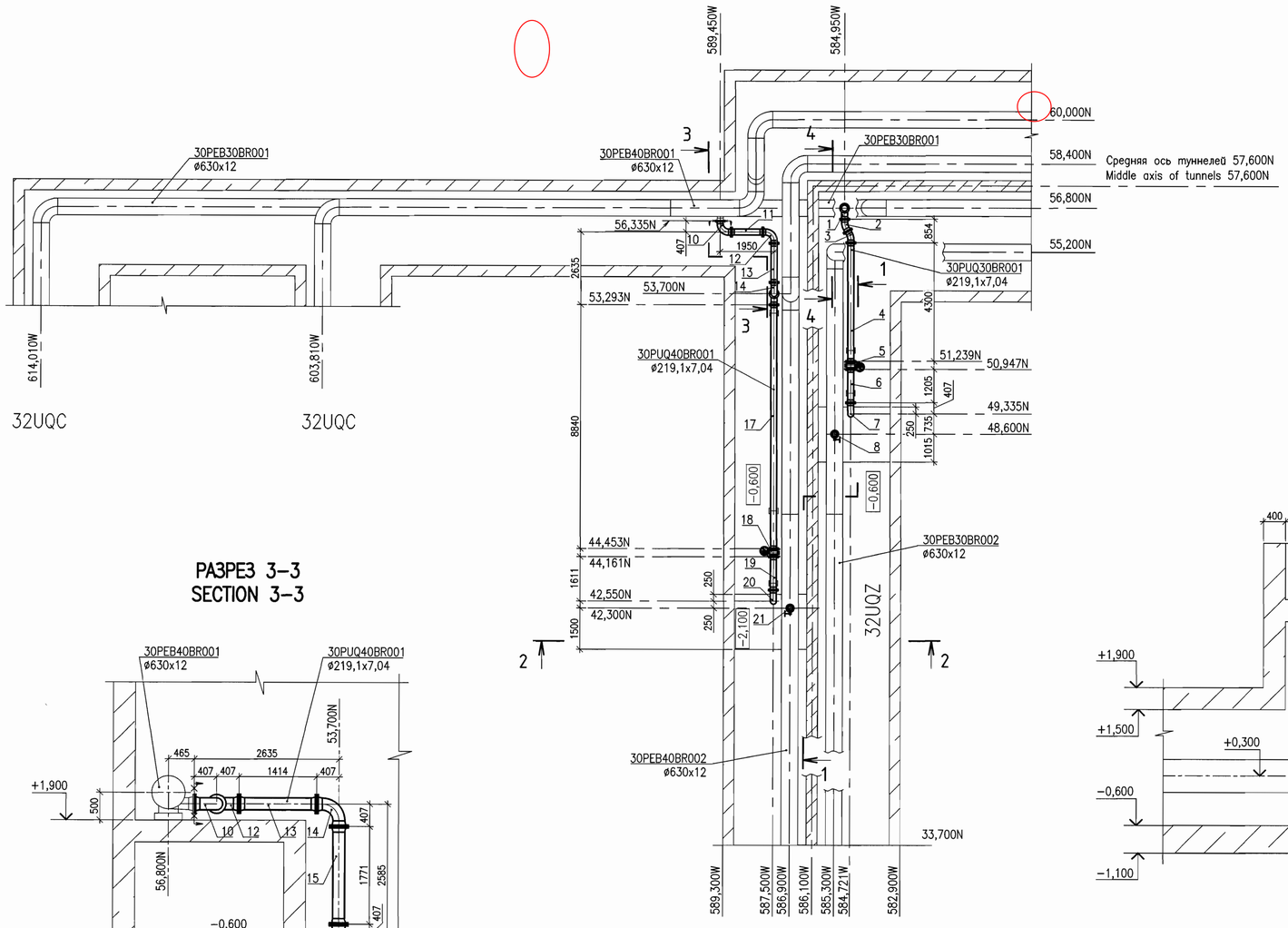

РАЗРЕЗ 2–2
SECTION 2–2

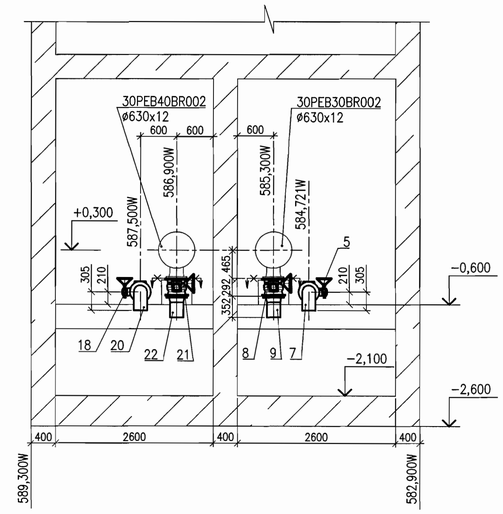

РАЗРЕЗ 1–1
SECTION 1–1

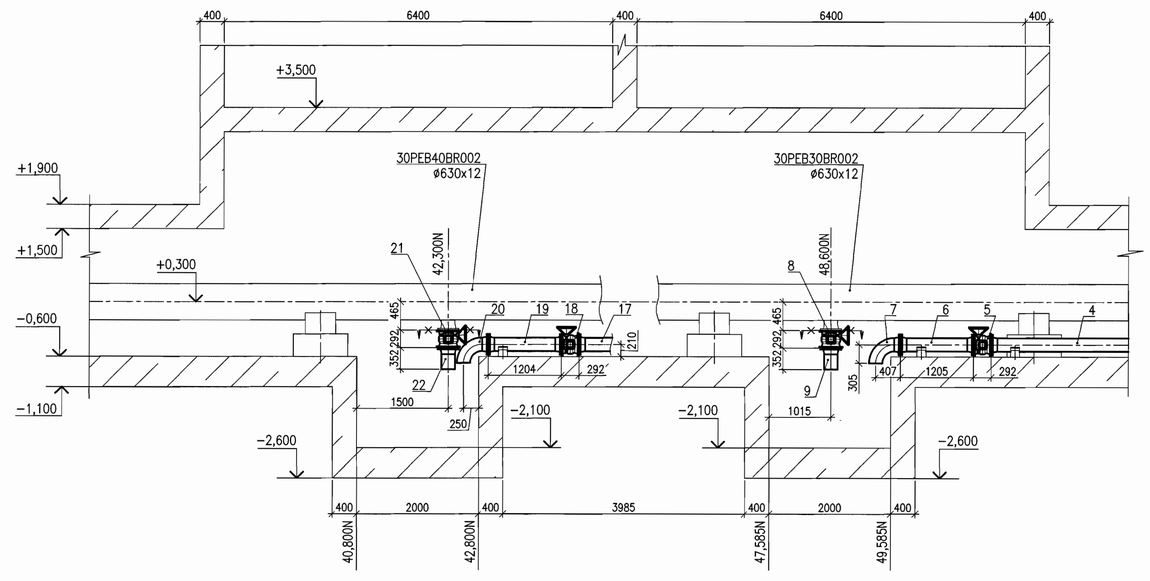

РАЗРЕЗ 3–3
SECTION 3–3

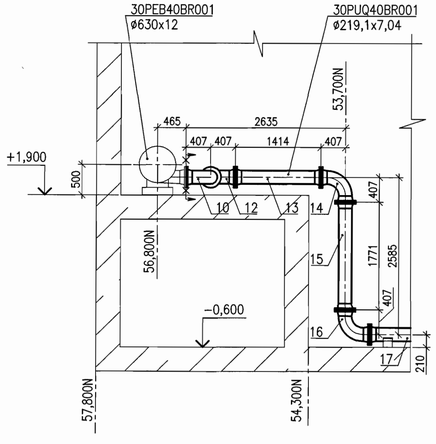

РАЗРЕЗ 4–4
SECTION 4–4

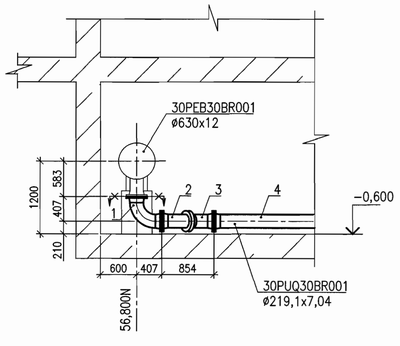

СХЕМА РАСПОЛОЖЕНИЯ
KEY PLAN

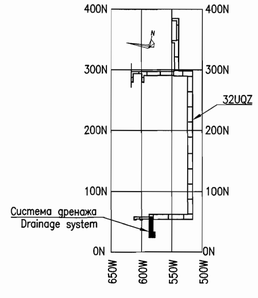

Спецификацию блоков трубопроводов смотри лист 4.

For pipelines blocks specification see sheet 4.

Package Number 3 12 6 44
File: R37 KK34 32UQZ PUQ TW OK WD001_03=0

Данный чертеж не подлежит размножению или передаче другим организациям и лицам без согласия АО "Мособлгидропроект"

This drawing is not to be reproduced or transferred to other organizations or private persons without approval of Joint-stock Company "Institute HYDROPROJECT"

Изм. / Rev.	N уч. / N pat.	Лист / Sheet	N док. / Doc. No	Подпись / Signature	Дата / Date
Утвердил / Approved		Panov			07.18
Н. контр. / Inspector		Alfimova			07.18
Разраб. / Designed		Solodovnikova			07.18

R37.KK34.32UQZ.PUQ.TW.OK.WD001

АЭС "КУДАНКУЛАМ" БЛОК 3
NPP "KUDANKULAM" UNIT 3

32UQZ
Система дренажа сбросных вод. Дренаж воды из туннелей в случае разрыва трубопровода
32UQZ
Drain water removal system. Water removal from tunnels in case of pipeline break

Стадия / Phase	Лист / Sheet	Листов / Sheets
WD	3	

План разбивки трубопроводов 30PUQ30BR001, 30PUQ30BR002, 30PUQ40BR001, 30PUQ40BR002 на блоки, разрезы 1–1...4–4
Block division plan of pipelines 30PUQ30BR001, 30PUQ30BR002, 30PUQ40BR001, 30PUQ40BR002, section 1–1...4–4

Joint-stock Company "Institute HYDROPROJECT"
Dedovsk 2018

Формат A1

Orig. arch. Nr. 429 | Date 13.07.2018 | Replace arch. Nr. | Inv. Nr. 28285 | Date 20.08.2018

ПЛАН РАССТАНОВКИ ОПОР НА ТРУБОПРОВОДАХ 30PUQ30BR001, 30PUQ40BR001.
LAYOUT OF SUPPORTS ON THE PIPELINES 30PUQ30BR001, 30PUQ40BR001.

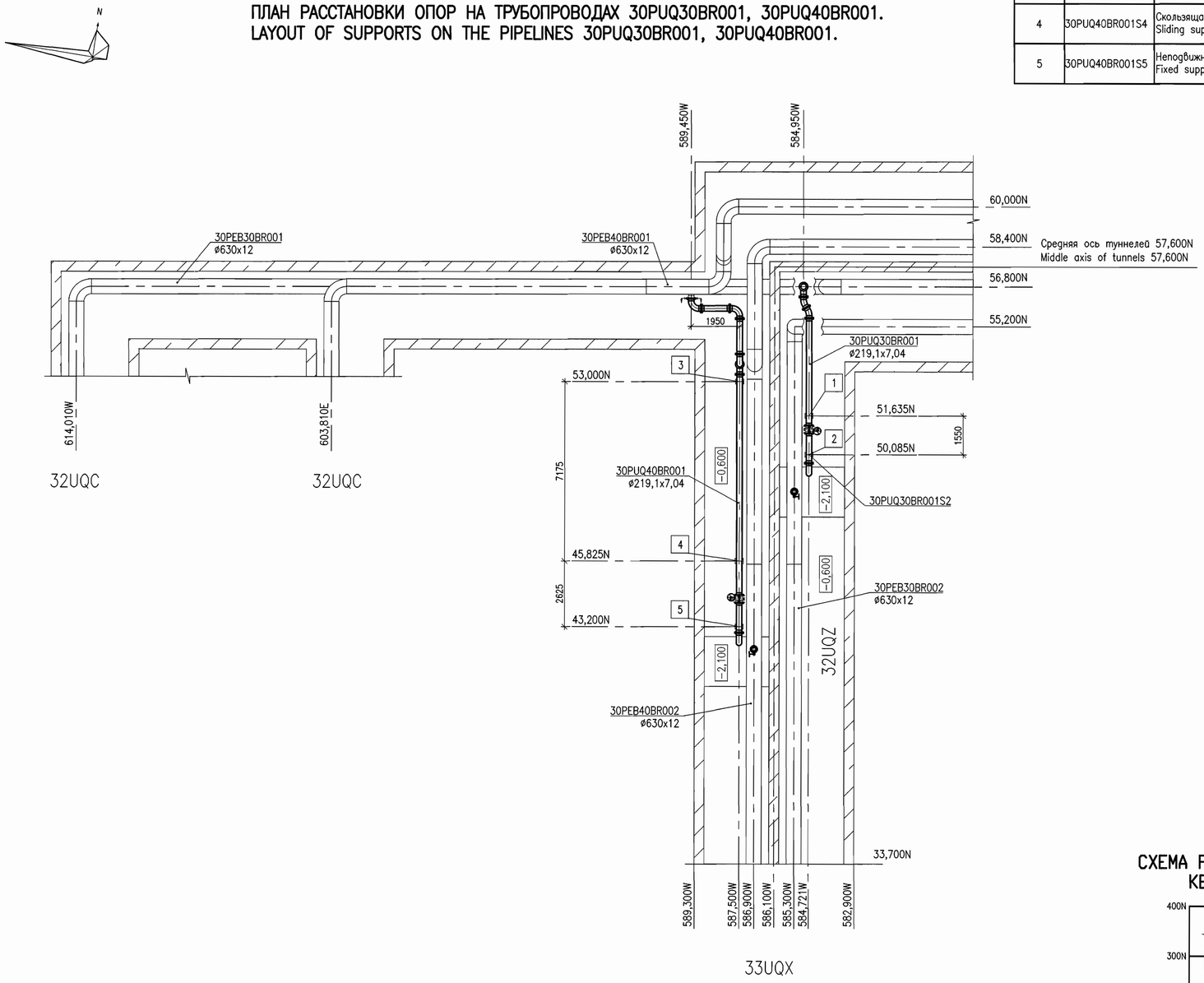

ВЕДОМОСТЬ ОПОР ТРУБОПРОВОДОВ 30PUQ30(40)BR001
LIST OF PIPELINES SUPPORTS 30PUQ30(40)BR001

Номер опоры на плане Support number on the plan	Код по системе KKS Code as per KKS	Наименование Description			Отметка Elevation	
		Технологическая опора Technological support	Кол. Q–ty	Масса ед.,кг Unit weight, kg	Пол туннеля Tunnel floor	Ось трубопровода Pipeline axis
1	30PUQ30BR001S1	Скользящая опора Sliding support	1	5,91	–0,600	–0,390
2	30PUQ30BR001S2	Неподвижная опора Fixed support	1	5,91	–0,600	–0,390
3	30PUQ40BR001S3	Скользящая опора Sliding support	1	5,91	–0,600	–0,390
4	30PUQ40BR001S4	Скользящая опора Sliding support	1	5,91	–0,600	–0,390
5	30PUQ40BR001S5	Неподвижная опора Fixed support	1	5,91	–0,600	–0,390

СПЕЦИФИКАЦИЯ БЛОКОВ ТРУБОПРОВОДОВ 30PUQ30(40)BR001, BR002
BLOCKS SPECIFICATION OF PIPELINES 30PUQ30(40)BR001, BR002

Поз. Pos.	Обозначение Designation	Наименование Name of block	Кол. Q–ty	Масса ед., кг Unit weight, kg	Примечание Note
1	R37.KK34.32UQZ.PUQ.TW.OK.WD001 лист 12 Sheet 12	Блок 30PUQ30BR001MR001 Block 30PUQ30BR001MR001	1	65,9	
2	R37.KK34.32UQZ.PUQ.TW.OK.WD001 лист 13 Sheet 13	Блок 30PUQ30BR001MR002 Block 30PUQ30BR001MR002	1	60,4	
3	R37.KK34.32UQZ.PUQ.TW.OK.WD001 лист 13 Sheet 13	Блок 30PUQ30BR001MR003 Block 30PUQ30BR001MR003	1	60,4	
4	R37.KK34.32UQZ.PUQ.TW.OK.WD001 лист 14 Sheet 14	Блок 30PUQ30BR001MR004 Block 30PUQ30BR001MR004	1	186,2	
5	ASME B16.34–2006	Двухстворчатый клапан DN 200; P 1,0 МПа Butterfly valve DN 200; P 1,0 MPa 30PUQ30AA105	1	–	
6	R37.KK34.32UQZ.PUQ.TW.OK.WD001 лист 15 Sheet 15	Блок 30PUQ30BR001MR006 Block 30PUQ30BR001MR006	1	72,3	
7	R37.KK34.32UQZ.PUQ.TW.OK.WD001 лист 16 Sheet 16	Блок 30PUQ30BR001MR007 Block 30PUQ30BR001MR007	1	48,2	
8	ASME B16.34–2006	Двухстворчатый клапан DN 200; P 1,0 МПа Butterfly valve DN 200; P 1,0 MPa 30PUQ30AA106	1	–	
9	R37.KK34.32UQZ.PUQ.TW.OK.WD001 лист 17 Sheet 17	Блок 30PUQ30BR002MR009 Block 30PUQ30BR002MR009	1	26,9	
10	R37.KK34.32UQZ.PUQ.TW.OK.WD001 лист 18 Sheet 18	Блок 30PUQ40BR001MR010 Block 30PUQ40BR001MR010	1	65,9	
11	R37.KK34.32UQZ.PUQ.TW.OK.WD001 лист 19 Sheet 19	Блок 30PUQ40BR001MR011 Block 30PUQ40BR001MR011	1	69,7	
12	R37.KK34.32UQZ.PUQ.TW.OK.WD001 лист 18 Sheet 18	Блок 30PUQ40BR001MR012 Block 30PUQ40BR001MR012	1	65,9	
13	R37.KK34.32UQZ.PUQ.TW.OK.WD001 лист 20 Sheet 20	Блок 30PUQ40BR001MR013 Block 30PUQ40BR001MR013	1	79,9	
14	R37.KK34.32UQZ.PUQ.TW.OK.WD001 лист 18 Sheet 18	Блок 30PUQ40BR001MR014 Block 30PUQ40BR001MR014	1	65,9	
15	R37.KK34.32UQZ.PUQ.TW.OK.WD001 лист 21 Sheet 21	Блок 30PUQ40BR001MR015 Block 30PUQ40BR001MR015	1	93,1	
16	R37.KK34.32UQZ.PUQ.TW.OK.WD001 лист 18 Sheet 18	Блок 30PUQ40BR001MR016 Block 30PUQ40BR001MR016	1	65,9	
17	R37.KK34.32UQZ.PUQ.TW.OK.WD001 лист 22 Sheet 22	Блок 30PUQ40BR001MR017 Block 30PUQ40BR001MR017	1	353,4	
18	ASME B16.34–2006	Двухстворчатый клапан DN 200; P 1,0 МПа Butterfly valve DN 200; P 1,0 MPa 30PUQ40AA105	1	–	
19	R37.KK34.32UQZ.PUQ.TW.OK.WD001 лист 23 Sheet 23	Блок 30PUQ40BR001MR019 Block 30PUQ40BR001MR019	1	72,2	
20	R37.KK34.32UQZ.PUQ.TW.OK.WD001 лист 24 Sheet 24	Блок 30PUQ40BR001MR020 Block 30PUQ40BR001MR020	1	48,2	
21	ASME B16.34–2006	Двухстворчатый клапан DN 200; P 1,0 МПа Butterfly valve DN 200; P 1,0 MPa 30PUQ40AA106	1	–	
22	R37.KK34.32UQZ.PUQ.TW.OK.WD001 лист 25 Sheet 25	Блок 30PUQ40BR002MR022 Block 30PUQ40BR002MR022	1	26,9	

Номера позиций данной спецификации соответствуют номерам блоков на листе 3.
Position numbers of this specification correspond with blocks numeration on Sheet 3.

СХЕМА РАСПОЛОЖЕНИЯ
KEY PLAN

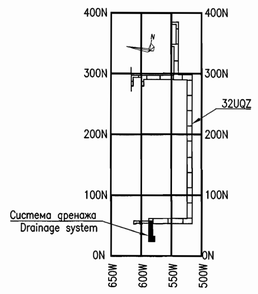

Package Number 3 12 6 44
File: R37 KK34 32UQZ PUQ TW OK WD001_04=0

Данный чертеж не подлежит размножению или передаче другим организациям и лицам без согласия АО "Мособлгидропроект"

This drawing is not to be reproduced or transferred to other organizations or private persons without approval of Joint–stock Company "Institute HYDROPROJECT"

Изм. Rev.	N уч. N pat.	Лист Sheet	N док. Doc. No	Подпись Signature	Дата Date
Утвердил Approved	Panov				07.8
Н. контр. Inspector	Alfimova				07.18
Разраб. Designed	Solodovnikova				07.8

R37.KK34.32UQZ.PUQ.TW.OK.WD001

АЭС "КУДАНКУЛАМ" БЛОК 3
NPP "KUDANKULAM" UNIT 3

32UQZ
Система дренажа сбросных вод. Дренаж воды из туннелей в случае разрыва трубопровода
32UQZ
Drain water removal system. Water removal from tunnels in case of pipeline break

Стадия Phase	Лист Sheet	Листов Sheets
WD	4	

План расстановки опор на трубопроводах 30PUQ30(40)BR001, спецификация блоков трубопроводов 30PUQ30(40)BR001, 30PUQ30(40)BR002
Layout of supports on the pipelines 30PUQ30(40)BR001, blocks specification of pipelines 30PUQ30(40)BR001, 30PUQ30(40)BR002

Joint-stock Company "Institute HYDROPROJECT" Dedovsk 2018

Формат А1

Orig. arch. Nr. 429 | Date 13.07.2018 | Replace arch. Nr.

Inv. Nr. 28285 Date 20.08.2018

ПЛАН РАЗБИВКИ ТРУБОПРОВОДОВ 30PUQ30(40)BR003, 30PUQ30(40)BR004, 30PUQ30(40)BR005, 30PUQ30(40)BR006 НА БЛОКИ

BLOCK DIVISION PLAN OF PIPELINES 30PUQ30(40)BR003, 30PUQ30(40)BR004, 30PUQ30(40)BR005, 30PUQ30(40)BR006

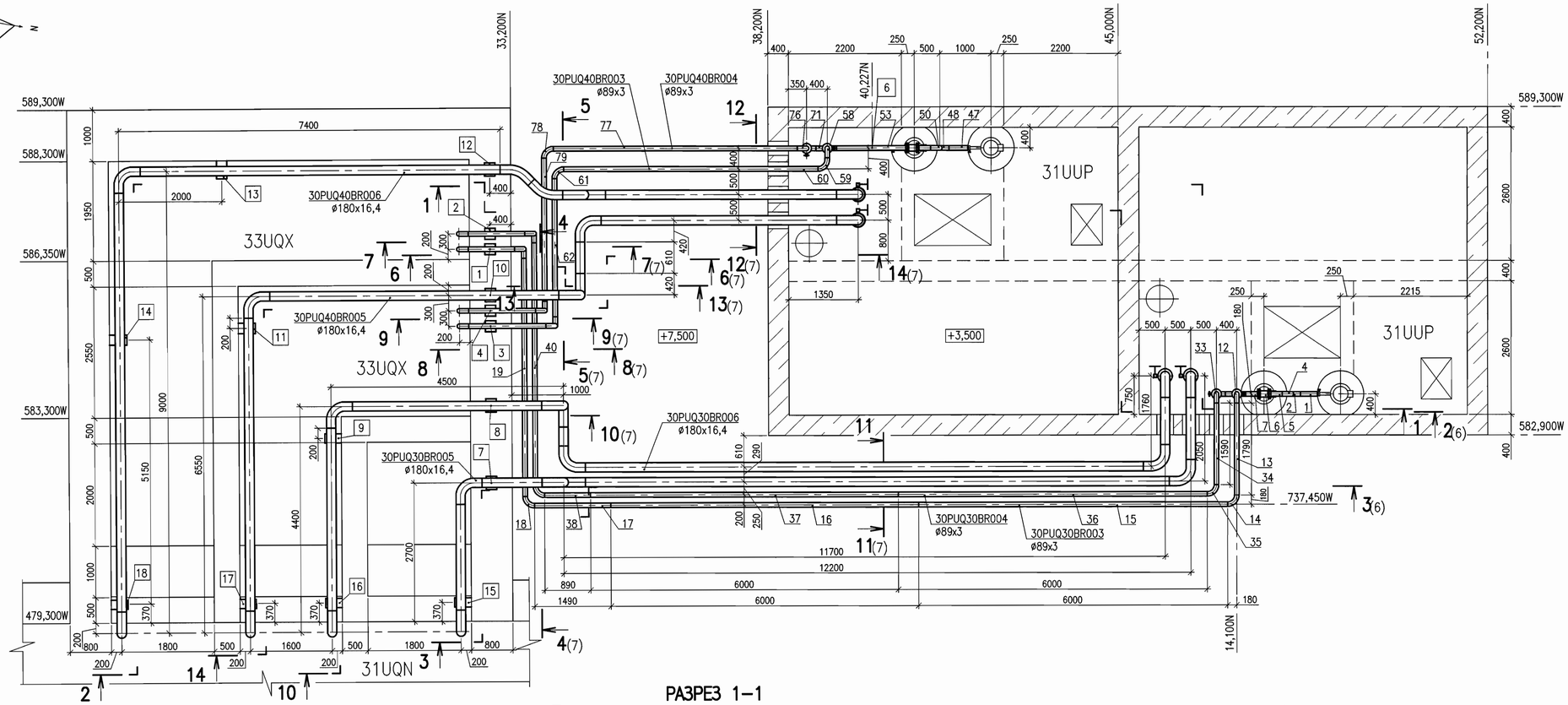

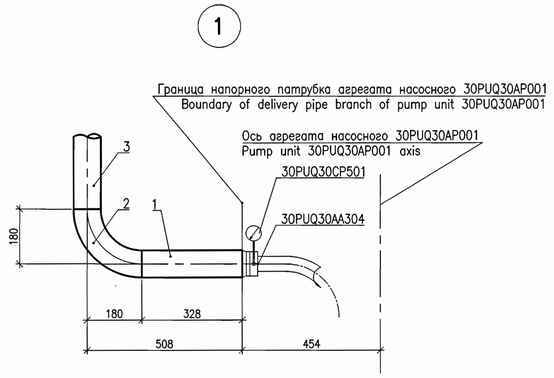

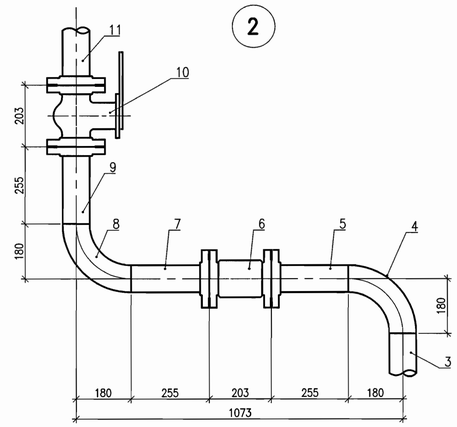

1 Спецификацию блоков трубопроводов смотри листы 8, 9, 10.
2 Ведомость опор трубопроводов смотри лист 11.

1 For pipelines blocks specification see sheets 8, 9, 10.
2 For list of pipelines supports see sheet 11.

РАЗРЕЗ 1–1
SECTION 1–1

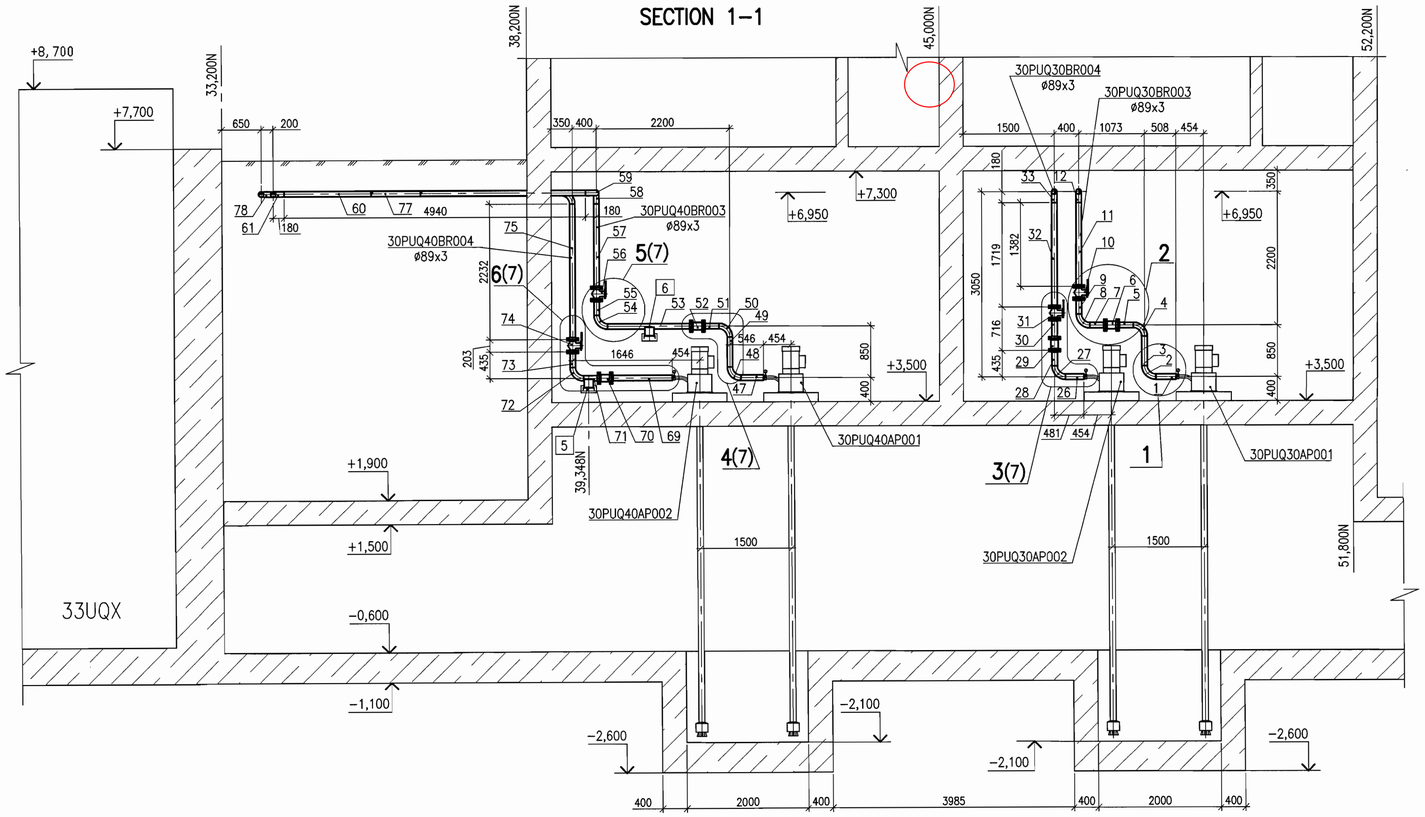

СХЕМА РАСПОЛОЖЕНИЯ
KEY PLAN

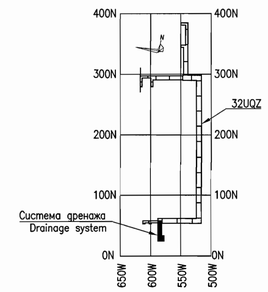

Package Number 3 12 6 44
File: R37 KK34 32UQZ PUQ TW OK WD001_05=0

Данный чертеж не подлежит размножению или передаче другим организациям и лицам без согласия АО "Мособлгидропроект"

This drawing is not to be reproduced or transferred to other organizations or private persons without approval of Joint-stock Company "Institute HYDROPROJECT"

Изм.	N уч.	Лист	N док.	Подпись	Дата
Rev.	N pat.	Sheet	Doc. No	Signature	Date
Утвердил Approved		Panov			07.11
Н. контр. Inspector		Alfimova			07.11
Разраб. Designed		Solodovnikova			07.11

R37.KK34.32UQZ.PUQ.TW.OK.WD001

АЭС "КУДАНКУЛАМ" БЛОК 3
NPP "KUDANKULAM" UNIT 3

32UQZ
Система дренажа сбросных вод. Дренаж воды из туннелей в случае разрыва трубопровода
32UQZ
Drain water removal system. Water removal from tunnels in case of pipeline break

Стадия	Лист	Листов
Phase	Sheet	Sheets
WD	5	

План разбивки трубопроводов 30PUQ30(40)BR003, 30PUQ30(40)BR004, 30PUQ30(40)BR005, 30PUQ30(40)BR006 на блоки, разрез 1–1, узлы 1, 2
Block division plan of pipelines 30PUQ30(40)BR003, 30PUQ30(40)BR004, 30PUQ30(40)BR005, 30PUQ30(40)BR006, section 1–1, units 1, 2

Joint-stock Company "Institute HYDROPROJECT"
Dedovsk 2018

Формат А1

Inv. Nr. 28285 Date 20.08.2018

Orig. arch. Nr.	Date	Replace arch. Nr.
429	13.07.2018	

РАЗРЕЗ 2–2(5)
SECTION 2–2(5)

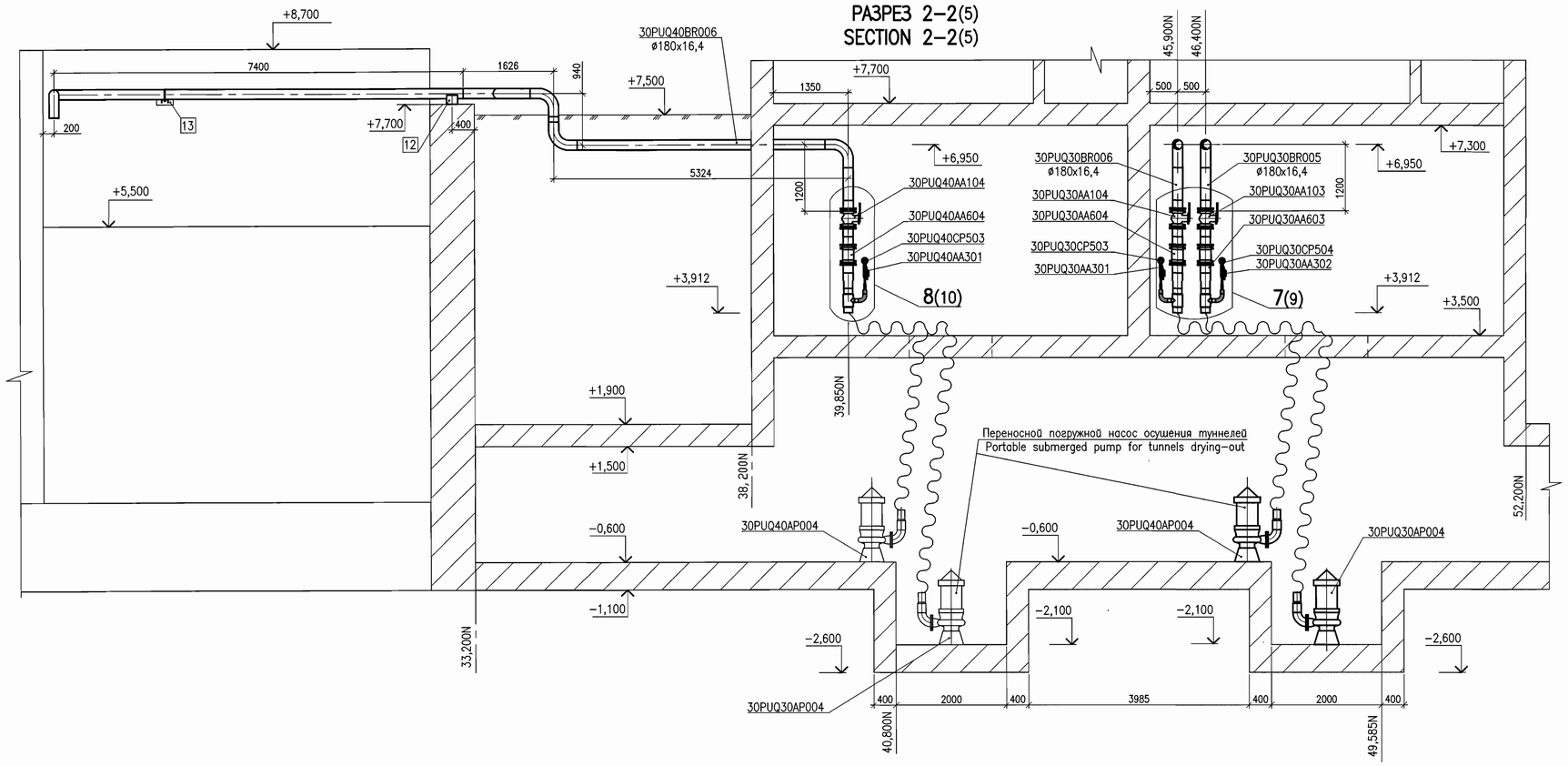

РАЗРЕЗ 3–3(5)
SECTION 3–3(5)

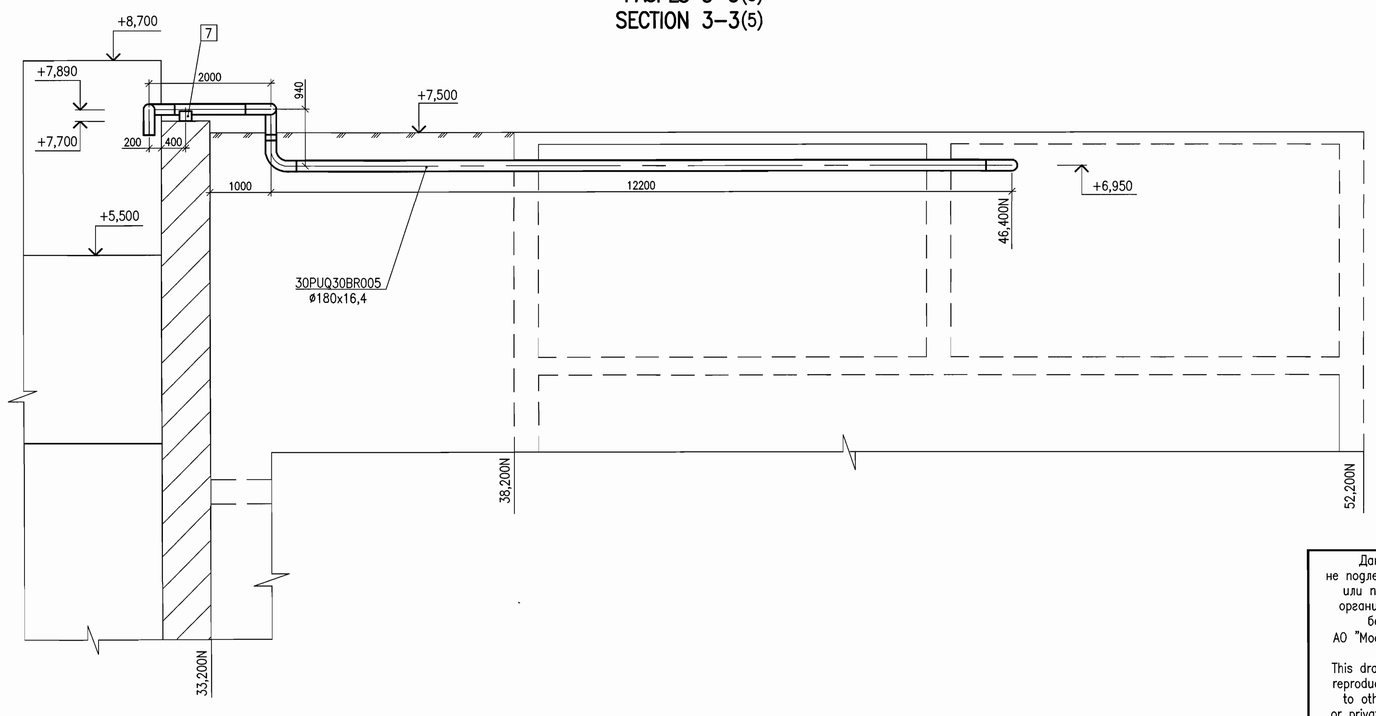

СХЕМА РАСПОЛОЖЕНИЯ
KEY PLAN

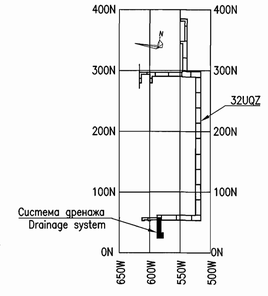

Package Number 3 12 6 44
File: R37 KK34 32UQZ PUQ TW OK WD001_06=0

Данный чертеж не подлежит размножению или передаче другим организациям и лицам без согласия АО "Мособлгидропроект"

This drawing is not to be reproduced or transferred to other organizations or private persons without approval of Joint-stock Company "Institute HYDROPROJECT"

Изм. / Rev.	N уч. / N pat.	Лист / Sheet	N док. / Doc. No	Подпись / Signature	Дата / Date
Утвердил / Approved		Panov			04.18
Н. контр. / Inspector		Alfimova			03.18
Разраб. / Designed		Solodovnikova			03.18

R37.KK34.32UQZ.PUQ.TW.OK.WD001

АЭС "КУДАНКУЛАМ" БЛОК 3
NPP "KUDANKULAM" UNIT 3

32UQZ
Система дренажа сбросных вод. Дренаж воды из туннелей в случае разрыва трубопровода
32UQZ
Drain water removal system. Water removal from tunnels in case of pipeline break

Разрезы 2–2, 3–3
Sections 2–2, 3–3

Стадия / Phase	Лист / Sheet	Листов / Sheets
WD	6	

Joint-stock Company "Institute HYDROPROJECT"
Dedovsk 2018

Формат А1

Inv. Nr. 28285 Date 20.08.2018

Orig. arch. Nr.	Date	Replace arch. Nr.
429	13.07.2018	

РАЗРЕЗ 4–4(5)
SECTION 4–4(5)

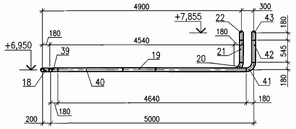

РАЗРЕЗ 5–5(5)
SECTION 5–5(5)

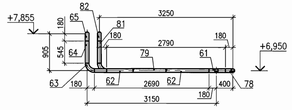

РАЗРЕЗ 6–6(5)
SECTION 6–6(5)

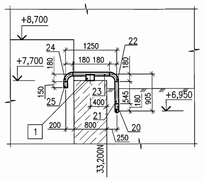

РАЗРЕЗ 7–7(5)
SECTION 7–7(5)

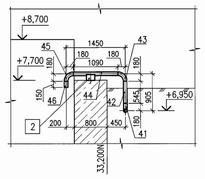

РАЗРЕЗ 10–10(5)
SECTION 10–10(5)

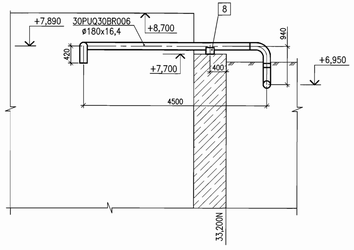

РАЗРЕЗ 8–8(5)
SECTION 8–8(5)

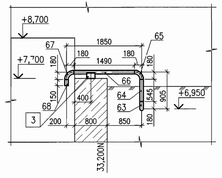

РАЗРЕЗ 9–9(5)
SECTION 9–9(5)

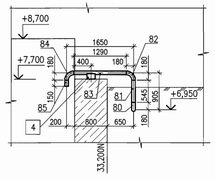

РАЗРЕЗ 11–11(5)
SECTION 11–11(5)

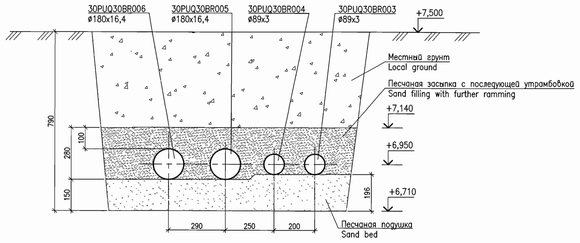

РАЗРЕЗ 12–12(5)
SECTION 12–12(5)

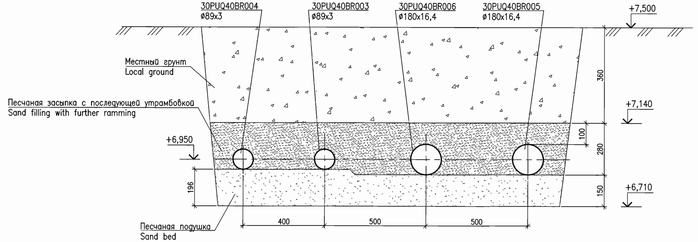

РАЗРЕЗ 13–13(5)
SECTION 13–13(5)

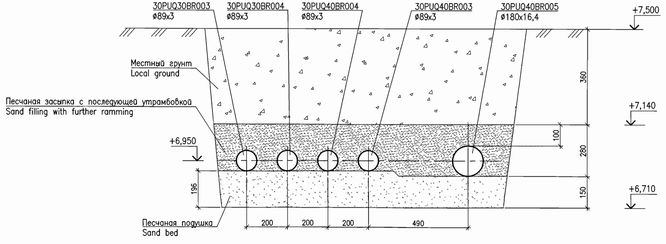

РАЗРЕЗ 14–14(5)
SECTION 14–14(5)

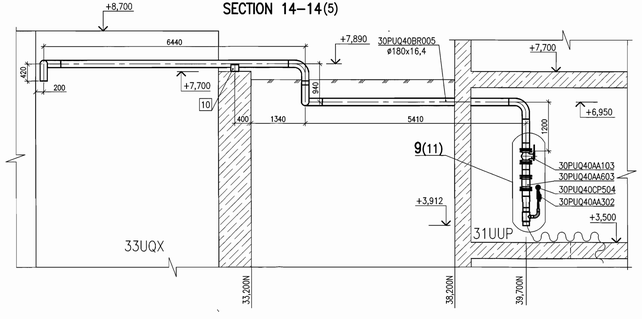

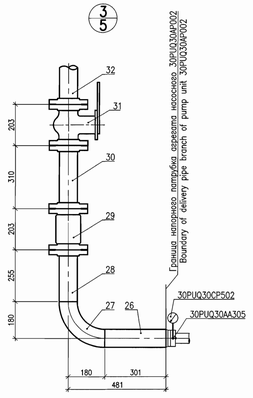

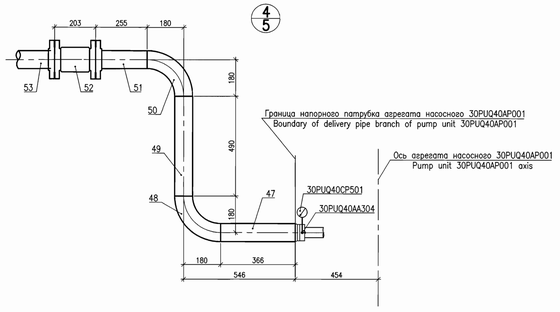

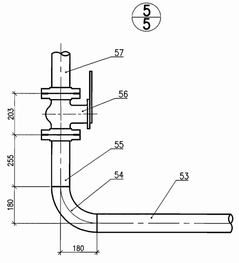

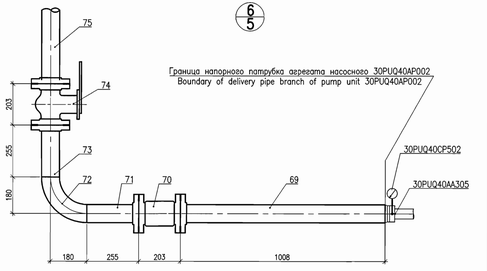

СХЕМА РАСПОЛОЖЕНИЯ
KEY PLAN

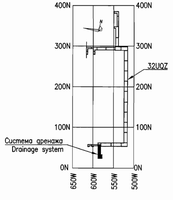

Package Number 3 12 6 44
File: R37 KK34 32UQZ PUQ TW OK WD001_07=0

Данный чертеж не подлежит размножению или передаче другим организациям и лицам без согласия АО "Мособлгидропроект"

This drawing is not to be reproduced or transferred to other organizations or private persons without approval of Joint-stock Company "Institute HYDROPROJECT"

Изм. Rev.	N уч. N pot.	Лист Sheet	N док. Doc. No	Подпись Signature	Дата Date
Утверждая Approved		Panov			09.07
Н. контр. Inspector		Alfimova			07.11
Разраб. Designed		Sokolovnikova			07.11

R37.KK34.32UQZ.PUQ.TW.OK.WD001

АЭС "КУДАНКУЛАМ" БЛОК 3
NPP "KUDANKULAM" UNIT 3

32UQZ
Система дренажа сбросных вод. Дренаж воды из туннеля в случае разрыва трубопровода
32UQZ
Drain water removal system. Water removal from tunnels in case of pipeline break

Разрезы 4–4...13–13, узлы 3...6
Sections 4–4...13–13, units 3...6

Стадия	Лист	Листов
Phase	Sheet	Sheets
WD	7	

Joint-Stock Company "Institute HYDROPROJECT" Godinvod 2019

Формат А2х3

Inv. Nr. 28285 Date 20.08.2018

Orig. arch. Nr.	Date	Replace arch. Nr.
427	13.07.2018	

СПЕЦИФИКАЦИЯ БЛОКОВ ТРУБОПРОВОДОВ 30PUQ30(40)BR003, 30PUQ30(40)BR004
SPECIFICATION OF PIPELINES BLOCKS 30PUQ30(40)BR003, 30PUQ30(40)BR004

Поз. Pos.	Обозначение Designation	Наименование Name of Block	Кол. Quant	Масса ед. Unit weight, kg	Примечание Note
76	R37.KK.32UQZ.PUQ.TW.OK.WD001 лист 63 Sheet 63	Блок 30PUQ40BR004MR076 Block 30PUQ40BR004MR076	1	1,4	
77	R37.KK.32UQZ.PUQ.TW.OK.WD001 лист 65 Sheet 65	Блок 30PUQ40BR004MR077 Block 30PUQ40BR004MR077	1	17,3	
78	R37.KK.32UQZ.PUQ.TW.OK.WD001 лист 63 Sheet 63	Блок 30PUQ40BR004MR078 Block 30PUQ40BR004MR078	1	1,4	
79	R37.KK.32UQZ.PUQ.TW.OK.WD001 лист 66 Sheet 66	Блок 30PUQ40BR004MR079 Block 30PUQ40BR004MR079	1	10,2	
80	R37.KK.32UQZ.PUQ.TW.OK.WD001 лист 63 Sheet 63	Блок 30PUQ40BR004MR080 Block 30PUQ40BR004MR080	1	1,4	
81	R37.KK.32UQZ.PUQ.TW.OK.WD001 лист 67 Sheet 67	Блок 30PUQ40BR004MR081 Block 30PUQ40BR004MR081	1	2,0	
82	R37.KK.32UQZ.PUQ.TW.OK.WD001 лист 63 Sheet 63	Блок 30PUQ40BR004MR082 Block 30PUQ40BR004MR082	1	1,4	
83	R37.KK.32UQZ.PUQ.TW.OK.WD001 лист 68 Sheet 68	Блок 30PUQ40BR004MR083 Block 30PUQ40BR004MR083	1	4,7	
84	R37.KK.32UQZ.PUQ.TW.OK.WD001 лист 63 Sheet 63	Блок 30PUQ40BR004MR084 Block 30PUQ40BR004MR084	1	1,4	
85	R37.KK.32UQZ.PUQ.TW.OK.WD001 лист 69 Sheet 69	Блок 30PUQ40BR004MR085 Block 30PUQ40BR004MR085	1	0,6	

Поз. Pos.	Обозначение Designation	Наименование Name of Block	Кол. Quant	Масса ед. Unit weight, kg	Примечание Note
51	R37.KK.32UQZ.PUQ.TW.OK.WD001 лист 53 Sheet 53	Блок 30PUQ40BR003MR051 Block 30PUQ40BR003MR051	1	3,1	
52	ASME B16.34–2009	Затвор обратный DN 80; P 1,0 МПа Check valve DN 80; P 1,0 MPa 30PUQ40AA601	1	–	
53	R37.KK.32UQZ.PUQ.TW.OK.WD001 лист 54 Sheet 54	Блок 30PUQ40BR003MR053 Block 30PUQ40BR003MR053	1	7,3	
54	R37.KK.32UQZ.PUQ.TW.OK.WD001 лист 51 Sheet 51	Блок 30PUQ40BR003MR054 Block 30PUQ40BR003MR054	1	1,4	
55	R37.KK.32UQZ.PUQ.TW.OK.WD001 лист 53 Sheet 53	Блок 30PUQ40BR003MR055 Block 30PUQ40BR003MR055	1	3,1	
56	ASME B16.34–2009	Двустворчатый клапан DN 80; P 1,0 МПа Butterfly valve DN 80; P 1,0 MPa 30PUQ40AA101	1	–	
57	R37.KK.32UQZ.PUQ.TW.OK.WD001 лист 54 Sheet 54	Блок 30PUQ40BR003MR057 Block 30PUQ40BR003MR057	1	7,3	
58	R37.KK.32UQZ.PUQ.TW.OK.WD001 лист 51 Sheet 51	Блок 30PUQ40BR003MR058 Block 30PUQ40BR003MR058	1	1,4	
59	R37.KK.32UQZ.PUQ.TW.OK.WD001 лист 55 Sheet 55	Блок 30PUQ40BR003MR059 Block 30PUQ40BR003MR059	1	1,5	
60	R37.KK.32UQZ.PUQ.TW.OK.WD001 лист 56 Sheet 56	Блок 30PUQ40BR003MR060 Block 30PUQ40BR003MR060	1	18,0	
61	R37.KK.32UQZ.PUQ.TW.OK.WD001 лист 51 Sheet 51	Блок 30PUQ40BR003MR061 Block 30PUQ40BR003MR061	1	1,4	
62	R37.KK.32UQZ.PUQ.TW.OK.WD001 лист 57 Sheet 57	Блок 30PUQ40BR003MR062 Block 30PUQ40BR003MR062	1	9,8	
63	R37.KK.32UQZ.PUQ.TW.OK.WD001 лист 51 Sheet 51	Блок 30PUQ40BR003MR063 Block 30PUQ40BR003MR063	1	1,4	
64	R37.KK.32UQZ.PUQ.TW.OK.WD001 лист 58 Sheet 58	Блок 30PUQ40BR003MR064 Block 30PUQ40BR003MR064	1	2,0	
65	R37.KK.32UQZ.PUQ.TW.OK.WD001 лист 51 Sheet 51	Блок 30PUQ40BR003MR065 Block 30PUQ40BR003MR065	1	1,4	
66	R37.KK.32UQZ.PUQ.TW.OK.WD001 лист 59 Sheet 59	Блок 30PUQ40BR003MR066 Block 30PUQ40BR003MR066	1	5,4	
67	R37.KK.32UQZ.PUQ.TW.OK.WD001 лист 51 Sheet 51	Блок 30PUQ40BR003MR067 Block 30PUQ40BR003MR067	1	1,4	
68	R37.KK.32UQZ.PUQ.TW.OK.WD001 лист 60 Sheet 60	Блок 30PUQ40BR003MR068 Block 30PUQ40BR003MR068	1	0,6	
69	R37.KK.32UQZ.PUQ.TW.OK.WD001 лист 61 Sheet 61	Блок 30PUQ40BR004MR069 Block 30PUQ40BR004MR069	1	6,2	
70	ASME B16.34–2009	Затвор обратный DN 80; P 1,0 МПа Check valve DN 80; P 1,0 MPa 30PUQ40AA602	1	–	
71	R37.KK.32UQZ.PUQ.TW.OK.WD001 лист 62 Sheet 62	Блок 30PUQ40BR004MR071 Block 30PUQ40BR004MR071	1	3,1	
72	R37.KK.32UQZ.PUQ.TW.OK.WD001 лист 63 Sheet 63	Блок 30PUQ40BR004MR072 Block 30PUQ40BR004MR072	1	1,4	
73	R37.KK.32UQZ.PUQ.TW.OK.WD001 лист 62 Sheet 62	Блок 30PUQ40BR004MR073 Block 30PUQ40BR004MR073	1	3,1	
74	ASME B16.34–2009	Двустворчатый клапан DN 80; P 1,0 МПа Butterfly valve DN 80; P 1,0 MPa 30PUQ40AA102	1	–	
75	R37.KK.32UQZ.PUQ.TW.OK.WD001 лист 64 Sheet 64	Блок 30PUQ40BR004MR075 Block 30PUQ40BR004MR075	1	10,3	

Поз. Pos.	Обозначение Designation	Наименование Name of Block	Кол. Quant	Масса ед. Unit weight, kg	Примечание Note
26	R37.KK.32UQZ.PUQ.TW.OK.WD001 лист 38 Sheet 38	Блок 30PUQ30BR004MR026 Block 30PUQ30BR004MR026	1	1,5	
27	R37.KK.32UQZ.PUQ.TW.OK.WD001 лист 39 Sheet 39	Блок 30PUQ30BR004MR027 Block 30PUQ30BR004MR027	1	1,4	
28	R37.KK.32UQZ.PUQ.TW.OK.WD001 лист 40 Sheet 40	Блок 30PUQ30BR004MR028 Block 30PUQ30BR004MR028	1	3,1	
29	ASME B16.34–2009	Затвор обратный DN 80; P 1,0 МПа Check valve DN 80; P 1,0 MPa 30PUQ30AA602	1	–	
30	R37.KK.32UQZ.PUQ.TW.OK.WD001 лист 41 Sheet 41	Блок 30PUQ30BR004MR030 Block 30PUQ30BR004MR030	1	5,5	
31	ASME B16.34–2009	Двустворчатый клапан DN 80; P 1,0 МПа Butterfly valve DN 80; P 1,0 MPa 30PUQ30AA102	1	–	
32	R37.KK.32UQZ.PUQ.TW.OK.WD001 лист 42 Sheet 42	Блок 30PUQ30BR004MR032 Block 30PUQ30BR004MR032	1	8,5	
33	R37.KK.32UQZ.PUQ.TW.OK.WD001 лист 39 Sheet 39	Блок 30PUQ30BR004MR033 Block 30PUQ30BR004MR033	1	1,4	
34	R37.KK.32UQZ.PUQ.TW.OK.WD001 лист 43 Sheet 43	Блок 30PUQ30BR004MR034 Block 30PUQ30BR004MR034	1	5,8	
35	R37.KK.32UQZ.PUQ.TW.OK.WD001 лист 39 Sheet 39	Блок 30PUQ30BR004MR035 Block 30PUQ30BR004MR035	1	1,4	
36	R37.KK.32UQZ.PUQ.TW.OK.WD001 лист 44 Sheet 44	Блок 30PUQ30BR004MR036 Block 30PUQ30BR004MR036	1	21,9	
37	R37.KK.32UQZ.PUQ.TW.OK.WD001 лист 44 Sheet 44	Блок 30PUQ30BR004MR037 Block 30PUQ30BR004MR037	1	21,9	
38	R37.KK.32UQZ.PUQ.TW.OK.WD001 лист 45 Sheet 45	Блок 30PUQ30BR004MR038 Block 30PUQ30BR004MR038	1	3,3	
39	R37.KK.32UQZ.PUQ.TW.OK.WD001 лист 39 Sheet 39	Блок 30PUQ30BR004MR039 Block 30PUQ30BR004MR039	1	1,4	
40	R37.KK.32UQZ.PUQ.TW.OK.WD001 лист 46 Sheet 46	Блок 30PUQ30BR004MR040 Block 30PUQ30BR004MR040	1	16,9	
41	R37.KK.32UQZ.PUQ.TW.OK.WD001 лист 39 Sheet 39	Блок 30PUQ30BR004MR041 Block 30PUQ30BR004MR041	1	1,4	
42	R37.KK.32UQZ.PUQ.TW.OK.WD001 лист 47 Sheet 47	Блок 30PUQ30BR004MR042 Block 30PUQ30BR004MR042	1	2,0	
43	R37.KK.32UQZ.PUQ.TW.OK.WD001 лист 39 Sheet 39	Блок 30PUQ30BR004MR043 Block 30PUQ30BR004MR043	1	1,4	
44	R37.KK.32UQZ.PUQ.TW.OK.WD001 лист 48 Sheet 48	Блок 30PUQ30BR004MR044 Block 30PUQ30BR004MR044	1	4,0	
45	R37.KK.32UQZ.PUQ.TW.OK.WD001 лист 39 Sheet 39	Блок 30PUQ30BR004MR045 Block 30PUQ30BR004MR045	1	1,4	
46	R37.KK.32UQZ.PUQ.TW.OK.WD001 лист 49 Sheet 49	Блок 30PUQ30BR004MR046 Block 30PUQ30BR004MR046	1	0,6	
47	R37.KK.32UQZ.PUQ.TW.OK.WD001 лист 50 Sheet 50	Блок 30PUQ40BR003MR047 Block 30PUQ40BR003MR047	1	1,7	
48	R37.KK.32UQZ.PUQ.TW.OK.WD001 лист 51 Sheet 51	Блок 30PUQ40BR003MR048 Block 30PUQ40BR003MR048	1	1,4	
49	R37.KK.32UQZ.PUQ.TW.OK.WD001 лист 52 Sheet 52	Блок 30PUQ40BR003MR049 Block 30PUQ40BR003MR049	1	1,8	
50	R37.KK.32UQZ.PUQ.TW.OK.WD001 лист 51 Sheet 51	Блок 30PUQ40BR003MR050 Block 30PUQ40BR003MR050	1	1,4	

Поз. Pos.	Обозначение Designation	Наименование Name of Block	Кол. Quant	Масса ед. Unit weight, kg	Примечание Note
1	R37.KK.32UQZ.PUQ.TW.OK.WD001 лист 26 Sheet 26	Блок 30PUQ30BR003MR001 Block 30PUQ30BR003MR001	1	1,6	
2	R37.KK.32UQZ.PUQ.TW.OK.WD001 лист 27 Sheet 27	Блок 30PUQ30BR003MR002 Block 30PUQ30BR003MR002	1	1,4	
3	R37.KK.32UQZ.PUQ.TW.OK.WD001 лист 28 Sheet 28	Блок 30PUQ30BR003MR003 Block 30PUQ30BR003MR003	1	1,8	
4	R37.KK.32UQZ.PUQ.TW.OK.WD001 лист 27 Sheet 27	Блок 30PUQ30BR003MR004 Block 30PUQ30BR003MR004	1	1,4	
5	R37.KK.32UQZ.PUQ.TW.OK.WD001 лист 29 Sheet 29	Блок 30PUQ30BR003MR005 Block 30PUQ30BR003MR005	1	3,1	
6	ASME B16.34–2009	Затвор обратный DN 80; P 1,0 МПа Check valve DN 80; P 1,0 MPa 30PUQ30AA601	1	–	
7	R37.KK.32UQZ.PUQ.TW.OK.WD001 лист 29 Sheet 29	Блок 30PUQ30BR003MR007 Block 30PUQ30BR003MR007	1	3,1	
8	R37.KK.32UQZ.PUQ.TW.OK.WD001 лист 27 Sheet 27	Блок 30PUQ30BR003MR008 Block 30PUQ30BR003MR008	1	1,4	
9	R37.KK.32UQZ.PUQ.TW.OK.WD001 лист 29 Sheet 29	Блок 30PUQ30BR003MR009 Block 30PUQ30BR003MR009	1	3,1	
10	ASME B16.34–2009	Двустворчатый клапан DN 80; P 1,0 МПа Butterfly valve DN 80; P 1,0 MPa 30PUQ30AA101	1	–	
11	R37.KK.32UQZ.PUQ.TW.OK.WD001 лист 30 Sheet 30	Блок 30PUQ30BR003MR011 Block 30PUQ30BR003MR011	1	7,2	
12	R37.KK.32UQZ.PUQ.TW.OK.WD001 лист 27 Sheet 27	Блок 30PUQ30BR003MR012 Block 30PUQ30BR003MR012	1	1,4	
13	R37.KK.32UQZ.PUQ.TW.OK.WD001 лист 31 Sheet 31	Блок 30PUQ30BR003MR013 Block 30PUQ30BR003MR013	1	6,5	
14	R37.KK.32UQZ.PUQ.TW.OK.WD001 лист 27 Sheet 27	Блок 30PUQ30BR003MR014 Block 30PUQ30BR003MR014	1	1,4	
15	R37.KK.32UQZ.PUQ.TW.OK.WD001 лист 32 Sheet 32	Блок 30PUQ30BR003MR015 Block 30PUQ30BR003MR015	1	21,6	
16	R37.KK.32UQZ.PUQ.TW.OK.WD001 лист 32 Sheet 32	Блок 30PUQ30BR003MR016 Block 30PUQ30BR003MR016	1	21,6	
17	R37.KK.32UQZ.PUQ.TW.OK.WD001 лист 33 Sheet 33	Блок 30PUQ30BR003MR017 Block 30PUQ30BR003MR017	1	5,4	
18	R37.KK.32UQZ.PUQ.TW.OK.WD001 лист 27 Sheet 27	Блок 30PUQ30BR003MR018 Block 30PUQ30BR003MR018	1	1,4	
19	R37.KK.32UQZ.PUQ.TW.OK.WD001 лист 34 Sheet 34	Блок 30PUQ30BR003MR019 Block 30PUQ30BR003MR019	1	16,6	
20	R37.KK.32UQZ.PUQ.TW.OK.WD001 лист 27 Sheet 27	Блок 30PUQ30BR003MR020 Block 30PUQ30BR003MR020	1	1,4	
21	R37.KK.32UQZ.PUQ.TW.OK.WD001 лист 35 Sheet 35	Блок 30PUQ30BR003MR021 Block 30PUQ30BR003MR021	1	2,0	
22	R37.KK.32UQZ.PUQ.TW.OK.WD001 лист 27 Sheet 27	Блок 30PUQ30BR003MR022 Block 30PUQ30BR003MR022	1	1,4	
23	R37.KK.32UQZ.PUQ.TW.OK.WD001 лист 36 Sheet 36	Блок 30PUQ30BR003MR023 Block 30PUQ30BR003MR023	1	3,3	
24	R37.KK.32UQZ.PUQ.TW.OK.WD001 лист 27 Sheet 27	Блок 30PUQ30BR003MR024 Block 30PUQ30BR003MR024	1	1,4	
25	R37.KK.32UQZ.PUQ.TW.OK.WD001 лист 37 Sheet 37	Блок 30PUQ30BR003MR025 Block 30PUQ30BR003MR025	1	0.6	

Номера позиций данной спецификации соответствуют номерам блоков на листах 5, 6, 7.

Position numbers of this specification coorespond with blocks numbers on Sheet 5, 6, 7.

Package Number 3 12 6 44
File: R37 KK34 32UQZ PUQ TW OK WD001_08=0

Данный чертеж не подлежит размножению или передаче другим организациям и лицам без согласия АО "Мособлгидропроект"

This drawing is not to be reproduced or transferred to other organizations or private persons without approval of Joint-stock Company "Institute HYDROPROJECT"

R37.KK34.32UQZ.PUQ.TW.OK.WD001

АЭС "КУДАНКУЛАМ" БЛОК 3
NPP "KUDANKULAM" UNIT

Изм. Rev.	N уч. N pat.	Лист Sheet	N док. Doc. No	Подпись Signature	Дата Date	32UQZ Система дренажа сбросных вод. Дренаж воды из туннелей в случае разрыва трубопровода 32UQZ Drain water removal system. Water removal from tunnels in case of pipeline break	Стадия Phase	Лист Sheet	Листов Sheets
Утвердил Approved		Panov					WD	8	
Н. контр. Inspector		Alfimova			07.19	Спецификация блоков трубопроводов 30PUQ30(40)BR003, 30PUQ30(40)BR004 Specification of pipelines blocks 0PUQ30(40)BR003, 30PUQ30(40)BR004	Joint-stock Company "Institute HYDROPROJECT" Dedovsk 2018		
Разраб. Designed		Solodovnikova			07.19				

Формат А1

Inv. Nr. 28285 Date 20.08.2018

Orig. arch. Nr.	Date	Replace arch. Nr
4269	17.07.2018	

ПРИНЦИПИАЛЬНАЯ СХЕМА ТРУБОПРОВОДОВ 30PUQ30BR005, 30PUQ30BR006
SCHEMATIC DIAGRAM OF PIPELINES 30PUQ30BR005, 30PUQ30BR006

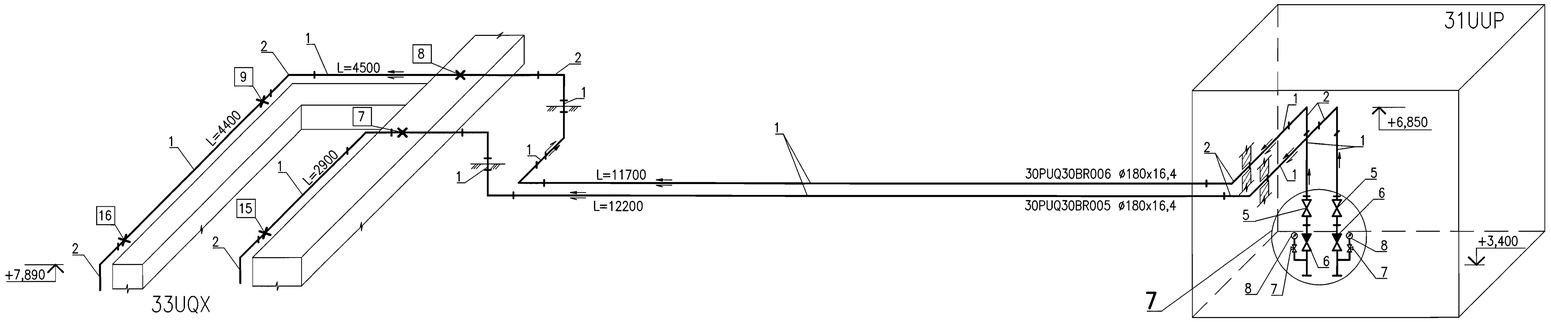

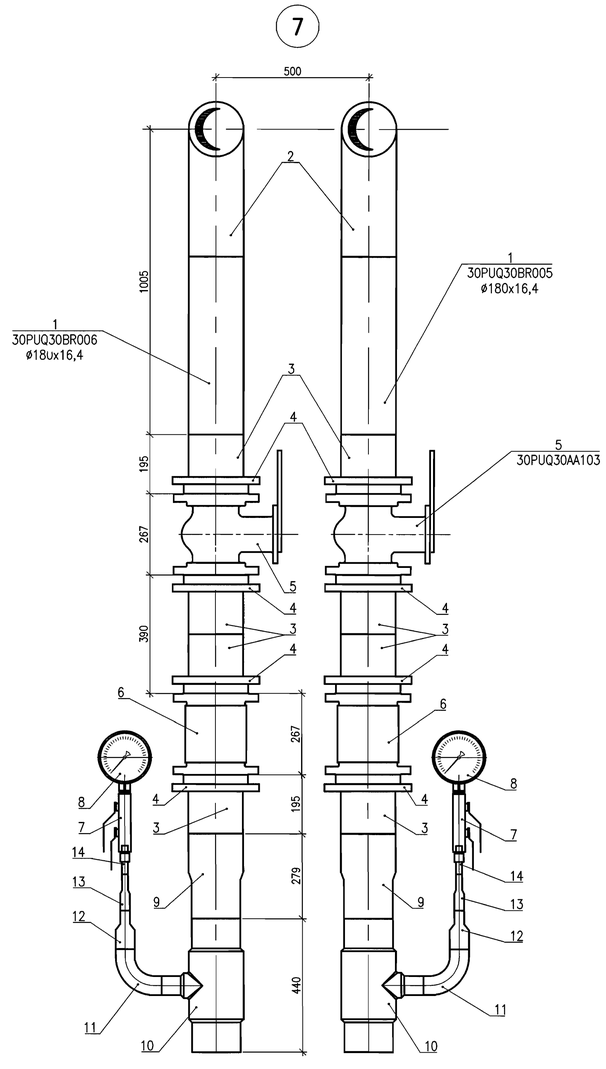

СПЕЦИФИКАЦИЯ ТРУБОПРОВОДОВ 30PUQ30BR005, 30PUQ30BR006
SPECIFICATION OF PIPELINES 30PUQ30BR005, 30PUQ30BR006

Поз. Pos	Обозначение Designation	Наименование Name of Block	Кол. Q-ty	Масса ед., кг Unit weight, kg	Примечание Note
1	ISO 4427	Труба 180x16,4 PE100&SDR11 / NDPE ISO 4427 Pipe 180x16,4 PE100&SDR11 / NDPE ISO 4427	37	8,4	метры metres
2	ISO 4427-3:2007	Отвод 90° d180 PE100 SDR11 Pipe-bend 90° d180 PE100 SDR11	13	4,4	шт. pcs.
3		Фланцевый адаптер d180 PE100 SDR11 Flanges adaptor d180 PE100 SDR11	8	–	шт. pcs.
4		Фланец стальной для фланцевого адаптера Flanges steel for flanges adapter	8	–	шт. pcs.
5	30PUQ30AA103 30PUQ30AA104	Двустворчатый клапан DN150 ASME B16.34-2004 Butterfly valve 150NB Class150 ASME B16.34-2004	2	–	шт. pcs.
6	30PUQ30AA603 30PUQ30AA604	Поворотный обратный клапан DN150 ASME B16.34-2004 Swing check valve 150NB Class150 ASME B16.34-2004	2	–	шт. pcs.
7	30PUQ30AA301 30PUQ30AA302	Игольчатый вентиль DN10 ASME B16.34-2004 Needle valve 10NB Class150 ASME B16.34-2004	2	–	шт. pcs.
8	30PUQ30AA503 30PUQ30AA506	Манвакуумметр показывающий Combined pressure-and-vacuum gauge indicating	2	–	шт. pcs.
9		Переход редукционный 180x160 Reducer long 180x160 PE100 SDR11	2	–	шт. pcs.
10		Тройник 90° 160x63 PE100 SDR11 Tee 90° 160x63 PE100 SDR11	2	–	шт. pcs.
11		Отвод 90° d63 Pipe-bend 90° d63 PE100 SDR11	2	–	шт. pcs.
12		Переход редукционный 63x32 Reducer long 63x32 PE100 SDR11	2	–	шт. pcs.
13		Переход редукционный 32x20 Reducer long 32x20 PE100 SDR11	2	–	шт. pcs.
14		Переход 20-G1/2 ПЭ-сталь с наружной резьбой Transition long 20-G1/2 male-thread-con	2	–	шт. pcs.

СХЕМА РАСПОЛОЖЕНИЯ
KEY PLAN

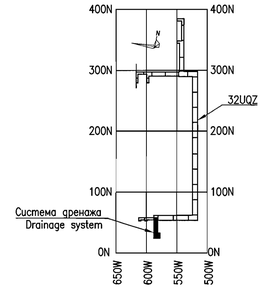

Package Number 3 12 6 44
File: R37 KK34 32UQZ PUQ TW OK WD001_09=0

Данный чертеж не подлежит размножению или передаче другим организациям и лицам без согласия АО "Мособлгидропроект"

This drawing is not to be reproduced or transferred to other organizations or private persons without approval of Joint-stock Company "Institute HYDROPROJECT"

Изм. Rev.	N уч. N pat.	Лист Sheet	N док. Doc. No	Подпись Signature	Дата Date
Утвердил Approved		Panov			07.18
Н. контр. Inspector		Alfimova			07.18
Разраб. Designed		Solodovnikova			07.18

R37.KK34.32UQZ.PUQ.TW.OK.WD001

АЭС "КУДАНКУЛАМ" БЛОК 3
NPP "KUDANKULAM" UNIT 3

32UQZ
Система дренажа сбросных вод. Дренаж воды из туннелей в случае разрыва трубопровода
32UQZ
Drain water removal system. Water removal from tunnels in case of pipeline break

Принципиальная схема трубопроводов 30PUQ30BR005, 30PUQ30BR006, узел 7, спецификация трубопроводов 30PUQ30BR005, 30PUQ30BR006
Schematic diagram of pipelines 30PUQ30BR005, 30PUQ30BR006 unit 7, specification of pipelines 30PUQ30BR005, 30PUQ30BR006

Стадия Phase	Лист Sheet	Листов Sheets
WD	9	

Joint-stock Company "Institute HYDROPROJECT"
Dedovsk 2018

Формат А1

Inv. Nr. 28285 Date 20.08.2018

Orig. arch. Nr.	Date	Replace arch. Nr.
429 -	13.07.2018	

ПРИНЦИПИАЛЬНАЯ СХЕМА ТРУБОПРОВОДОВ 30PUQ40BR005, 30PUQ40BR006
SCHEMATIC DIAGRAM OF PIPELINES 30PUQ40BR005, 30PUQ40BR006

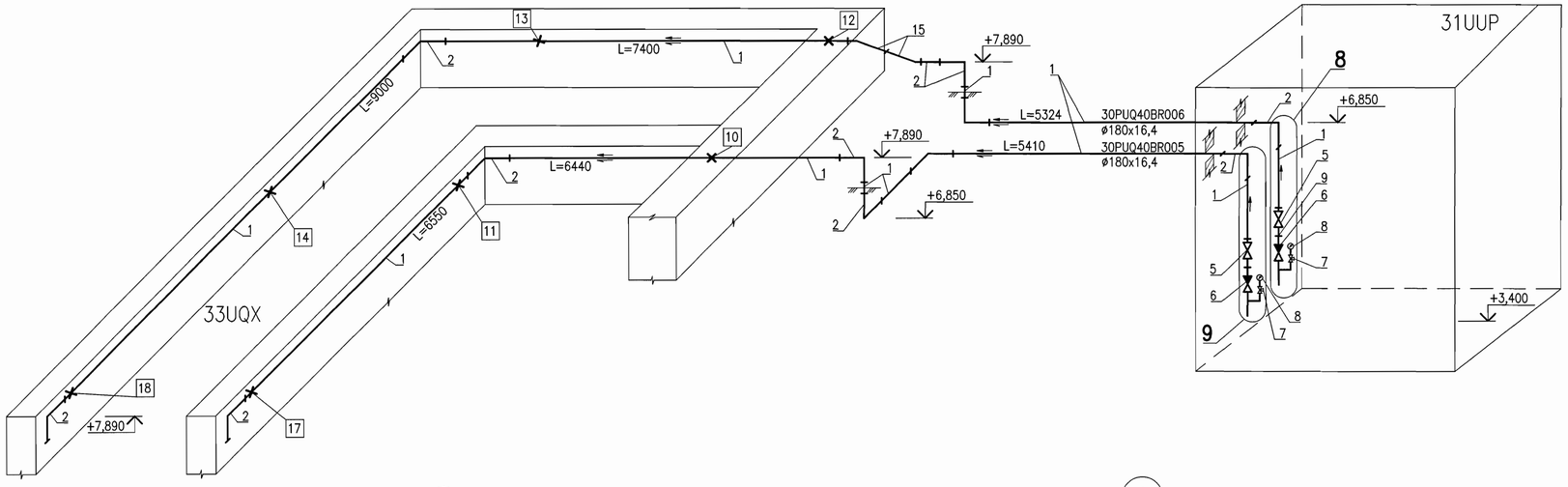

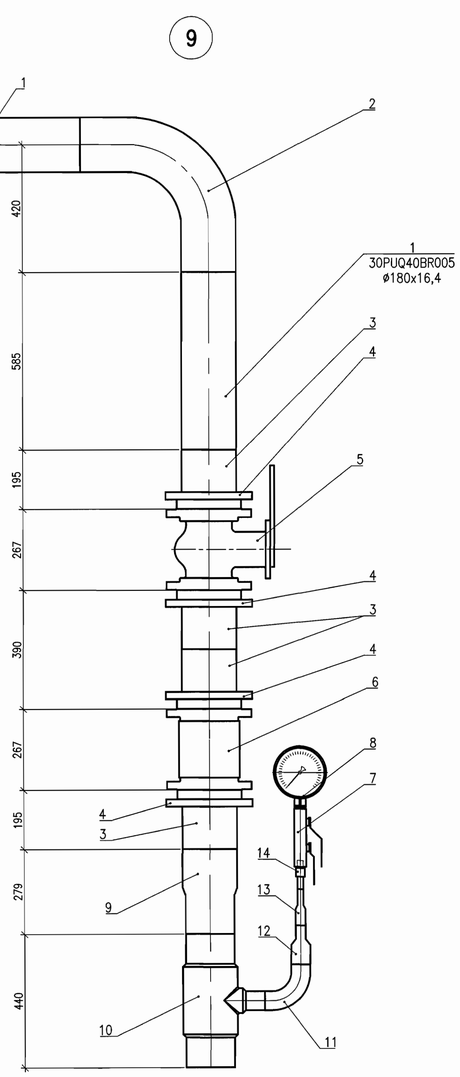

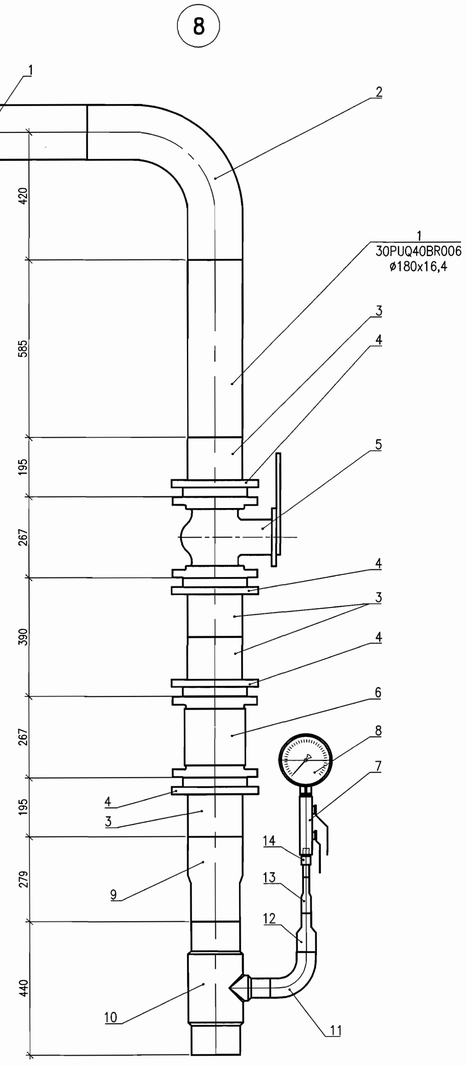

СПЕЦИФИКАЦИЯ ТРУБОПРОВОДОВ 30PUQ40BR005, 30PUQ40BR006
SPECIFICATION OF PIPELINES 30PUQ40BR005, 30PUQ40BR006

Поз. Pos	Обозначение Designation	Наименование Name of Block	Кол. Q-ty	Масса ед., кг Unit weight, kg	Примечание Note
1	ISO 4427	Труба 180x16,4 PE100&SDR11 NDPE ISO 4427 Pipe 180x16,4 PE100&SDR11 NDPE ISO 4427	38	8,4	метры metres
2	ISO 4427-3:2007	Отвод 90° d180 PE100 SDR11 Pipe-bend 90° d180 PE100 SDR11	11	4,4	шт. pcs.
3		Фланцевый адаптер d180 PE100 SDR11 Flanges adaptor d180 PE100 SDR11	8	–	шт. pcs.
4		Фланец стальной для фланцевого адаптера Flanges steel for flanges adapter	8	–	шт. pcs.
5	30PUQ40AA103 30PUQ40AA104	Двустворчатый клапан DN150 ASME B16.34-2004 Butterfly valve 150NB Class150 ASME B16.34-2004	2	–	шт. pcs.
6	30PUQ40AA603 30PUQ40AA604	Поворотный обратный клапан DN150 ASME B16.34-2004 Swing check valve 150NB Class150 ASME B16.34-2004	2	–	шт. pcs.
7	30PUQ40AA301 30PUQ40AA302	Игольчатый вентиль DN10 ASME B16.34-2004 Needle valve 10NB Class150 ASME B16.34-2004	2	–	шт. pcs.
8	30PUQ40AA503 30PUQ40AA506	Мановакуумметр показывающий Combined pressure-and-vacuum gage indicating	2	–	шт. pcs.
9		Переход редукционный 180x160 Reducer long 180x160 PE100 SDR11	2	–	шт. pcs.
10		Тройник 90° 160x63 PE100 SDR11 Tee 90° 160x63 PE100 SDR11	2	–	шт. pcs.
11		Отвод 90° d63 Pipe-bend 90° d63 PE100 SDR11	2	–	шт. pcs.
12		Переход редукционный 63x32 Reducer long 63x32 PE100 SDR11	2	–	шт. pcs.
13		Переход редукционный 32x20 Reducer long 32x20 PE100 SDR11	2	–	шт. pcs.
14		Переход 20-G1/2 ПЭ-сталь с наружной резьбой Transition long 20-G1/2 male-thread-con	2	–	шт. pcs.
15	ISO 4427-3:2007	Отвод 45° d180 PE100 SDR11 Pipe-bend 45° d180 PE100 SDR11	2	2,2	шт. pcs.

СХЕМА РАСПОЛОЖЕНИЯ
KEY PLAN

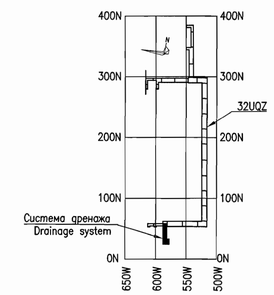

Package Number 3 12 6 44
File: R37 KK34 32UQZ PUQ TW OK WD001_10=0

Данный чертеж не подлежит размножению или передаче другим организациям и лицам без согласия АО "Мособлгидропроект"

This drawing is not to be reproduced or transferred to other organizations or private persons without approval of Joint-stock Company "Institute HYDROPROJECT"

Изм. Rev.	N уч. N pat.	Лист Sheet	N док. Doc. No	Подпись Signature	Дата Date
Утвердил Approved	Panov				07.18
Н. контр. Inspector	Alfimova				07.18
Разраб. Designed	Solodovnikova				07.18

R37.KK34.32UQZ.PUQ.TW.OK.WD001

АЭС "КУДАНКУЛАМ" БЛОК 3
NPP "KUDANKULAM" UNIT 3

32UQZ
Система дренажа сбросных вод. Дренаж воды из туннелей в случае разрыва трубопровода
32UQZ
Drain water removal system. Water removal from tunnels in case of pipeline break

Принципиальная схема трубопроводов 30PUQ40BR005 30PUQ40BR006, узлы 8, 9, спецификация трубопроводов 30PUQ40BR005, 30PUQ40BR006
Schematik diagram of pipelines 30PUQ40BR005, 30PUQ40BR006, units 8, 9, specification of pipelines 30PUQ40BR005, 30PUQ40BR006

Стадия Phase	Лист Sheet	Листов Sheets
WD	10	

Joint-stock Company "Institute HYDROPROJECT" Dedovsk 2018

Формат А1

Inv. Nr. 28285 Date 20.08.2018

Orig. arch. Nr.	Date	Replace arch. Nr.
429	13.07.2018	

УСТАНОВКА ОПОР ТРУБОПРОВОДОВ
INSTALLATION OF PIPELINES SUPPORTS

ОПОРЫ ТРУБОПРОВОДОВ 30PUQ30(40)BR001
PIPELINES SUPPORTS 30PUQ30(40)BR001

ОПОРЫ 30PUQ30BR001S1, 30PUQ40BR001S3, S4 (СКОЛЬЗЯЩИЕ ОПОРЫ)
SUPPORTS 30PUQ30BR001S1, 30PUQ40BR001S3, S4 (SLIDING SUPPORTS)

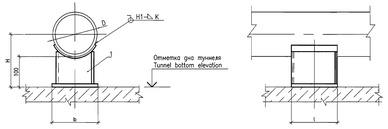

ОПОРЫ 30PUQ30BR001S2, 30PUQ40BR001S5 (НЕПОДВИЖНЫЕ ОПОРЫ)
SUPPORTS 30PUQ30BR001S2, 30PUQ40BR001S5 (FIXED SUPPORTS)

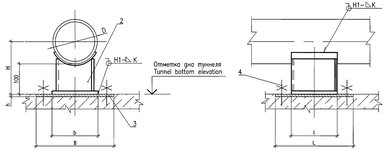

Опорная плита (поз.3)
Base plate (item. 3)

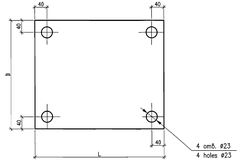

ОПОРЫ ТРУБОПРОВОДОВ 30PUQ30(40)BR003
PIPELINES SUPPORTS 30PUQ30(40)BR003

ОПОРЫ 30PUQ40BR003S5, S6 (СКОЛЬЗЯЩИЕ ОПОРЫ)
SUPPORTS 30PUQ40BR003S5, S6 (SLIDING SUPPORTS)

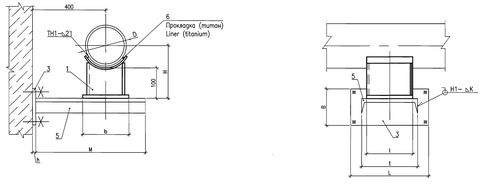

ОПОРЫ 30PUQ30BR003S1, S2; 30PUQ40BR003S3, S4 (НЕПОДВИЖНЫЕ ОПОРЫ)
SUPPORTS 30PUQ30BR003S1, S2; 30PUQ40BR003S3, S4 (FIXED SUPPORTS)

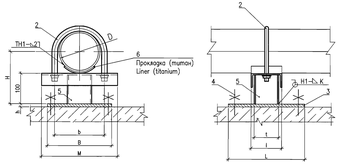

ОПОРЫ ТРУБОПРОВОДОВ 30PUQ30(40)BR004
PIPELINES SUPPORTS 30PUQ30(40)BR004

ОПОРЫ 30PUQ30BR004S7, S8; 30PUQ40BR004S10, S12 (тип 1)
SUPPORTS 30PUQ30BR004S7, S8; 30PUQ40BR004S10, S12 (type 1)

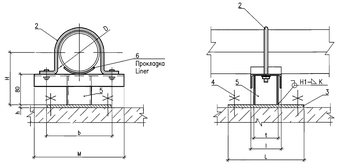

ОПОРЫ 30PUQ30BR004S9, S15, S16; 30PUQ40BR004S11, S13, S14, S17, S18 (тип 2)
SUPPORTS 30PUQ30BR004S9, S15, S16; 30PUQ40BR004S11, S13, S14, S17, S18 (type 2)

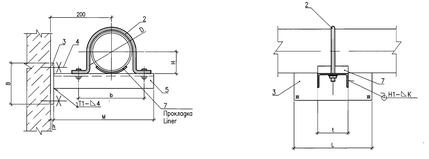

ВЕДОМОСТЬ ОПОР ТРУБОПРОВОДОВ 30PUQ30(40)BR003, 30PUQ30(40)BR004, 30PUQ30(40)BR005, 30PUQ30(40)BR006
LIST OF PIPELINES SUPPORTS 30PUQ30(40)BR003, 30PUQ30(40)BR004, 30PUQ30(40)BR005, 30PUQ30(40)BR006

Номер опоры на плане Support number on the plan	Код по системе KKS Code as per KKS	Наименование Description: Технологическая опора Technological support	Кол. Q-ty	Масса ед.кг Unit weight kg	Отметка Elevation: Верхняя грань подпорной стенки или бера подпорной конструкции Upper face of the retaining wall or retaining structure top	Ось трубопровода Pipeline axis
1	30PUQ30BR003S1	Неподвижная опора Fixed support	1	1.07	+7,700	+7,855
2	30PUQ30BR003S2	Неподвижная опора Fixed support	1	1.07	+7,700	+7,855
3	30PUQ40BR003S3	Неподвижная опора Fixed support	1	1.07	+7,700	+7,855
4	30PUQ40BR003S4	Неподвижная опора Fixed support	1	1.07	+7,700	+7,855
5	30PUQ40BR003S5	Скользящая опора Sliding support	1	1.07	+3,755	+3,900
6	30PUQ40BR003S6	Скользящая опора Sliding support	1	1.07	+4,605	+4,750
7	30PUQ30BR004S7	Опора тип 1 Support type 1	1	2.05	+7,700	+7,890
8	30PUQ30BR004S8	Опора тип 1 Support type 1	1	2.05	+7,700	+7,890
9	30PUQ30BR004S9	Опора тип 2 Support type 2	1	2.05	+7,700	+7,890
10	30PUQ40BR004S10	Опора тип 1 Support type 1	1	2.05	+7,700	+7,890
11	30PUQ40BR004S11	Опора тип 2 Support type 2	1	2.05	+7,700	+7,890
12	30PUQ40BR004S12	Опора тип 1 Support type 1	1	2.05	+7,700	+7,890
13	30PUQ40BR004S13	Опора тип 2 Support type 2	1	2.05	+7,700	+7,890
14	30PUQ40BR004S14	Опора тип 2 Support type 2	1	2.05	+7,700	+7,890
15	30PUQ30BR004S15	Опора тип 2 Support type 2	1	2.05	+7,700	+7,890
16	30PUQ30BR004S16	Опора тип 2 Support type 2	1	2.05	+7,700	+7,890
17	30PUQ40BR004S17	Опора тип 2 Support type 2	1	2.05	+7,700	+7,890
18	30PUQ40BR004S18	Опора тип 2 Support type 2	1	2.05	+7,700	+7,890

ТАБЛИЦА ОПОР ТРУБОПРОВОДОВ
TABLE OF PIPELINES SUPPORTS

Диаметр и толщина стенки трубопровода Dvs, мм Diameter and wall thickness of pipeline Dvs, mm	Тип опоры Support type	Размеры, мм Dimensions, mm: Технологическая опора Technological support: H	b	i	K	Опорная плита (поз.3) Base plate (item 3): B	L	t	M	Швеллер (поз.5) Channel (item 5)	Количество Quantity: Скользящая опора (поз.1) Sliding support (item 1)	Неподвижная опора (поз.2) Fixed support (item 2)	Опорная плита (поз.3) Base plate (item 3)	Анкер HILTI HDA-T/IF/TR M12x25/30 (поз.4) Anchor HILTI HDA-T/IF/TR M12x25/30 (item 4)	Швеллер (поз.5) Channel (item 5)	Прокладка титановая (поз.6) Liner (titanium) (item 6)	Прокладка резиновая (поз.7) Liner (ribbon) (item 7)	Масса опоры, кг Support weight, kg	Примечание Note
89x3	Скользящая опора Sliding support	145	60	100	3	10	210	250	140	460	2	–	2	8	2	2	–	1,07	
	Неподвижная опора Fixed support	145	180	120	3	10	210	250	100	95	–	4	4	16	4	4	–	1,07	
180x16,4	Опора тип 1 Support type 1	190	120	150	4	–	–	–	–	–	–	–	–	–	–	–	4	2,05	
	Опора тип 2 Support type 2	90	216	–	4	10	270	300	100	150	–	12	12	48	12	–	12	2,05	
219,1x7,04	Скользящая опора Sliding support	210	200	200	6	–	–	–	–	–	3	–	–	–	–	–	–	5,91	
	Неподвижная опора Fixed support	210	200	200	6	10	350	350	–	–	–	2	2	8	–	–	–	5,91	

1 План расстановки опор по трассе смотри листы 4, 5.
2 Для установки опорных плит (поз.3) на дне тоннелей выполнить выемку бетона под ними на глубину 10 мм. При установке опорных плит (поз. 3) на верхней грани подпорной стены сифонных колодцев (отметка +7,700) и отметке выемку бетона не производить.
3 Опорная плита (поз. 3) крепится анкерными болтами (поз.4) в четырех точках.
4 Существующая подбетонка дна тоннеля в местах установки опор, если она есть, удаляется.
5 Подпорные конструкции смотри Пакет 3 9 2 90 и чертежи подпорных стен сифонного колодца 33UQX.

1 For layout plan of supports along the route see sheets 4, 5.
2 For installation of base plates (item 3) it is required to execute taking out of concrete under these base plates to the depth 10 mm. At installation of base plates (item 3) on the upper face of the retaining wall of siphon wells (elevation +7.700), the taking out of concrete is not to be performed.
3 The base plates (item 3) are to be fastened by anchor bolts (item 4) in four attaching points.
4 If there is a concrete layer at the tunnel bottom in the sections of supports placement, then it should be removed.
5 For retaining structures see Package 3 9 2 90 and drawings of siphon well 33UQX retaining walls.

СХЕМА РАСПОЛОЖЕНИЯ
KEY PLAN

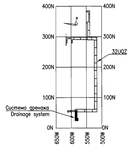

Package Number 3 12 6 44
File: R37 KK34 32UQZ PUQ TW OK WD001_11=0

Данный чертеж не подлежит размножению или передаче другим организациям и лицам без согласия АО "Гидропроект".
This drawing is not to be reproduced or transferred to other organizations or private persons without approval of Joint-stock Company "Institute HYDROPROJECT"

Изм. Rev.	N уч. N pol.	Лист N Sheet	Док. No.	Подпись Signature	Дата Date
Утверждал Approved		Panov			
Н. контр. Inspector		Alifmova			
Разраб. Designed		Sokolovskaya			

R37.KK34.32UQZ.PUQ.TW.OK.WD001
АЭС "КУДАНКУЛАМ" БЛОК 3
NPP "KUDANKULAM" UNIT 3
32UQZ
Система дренажа сбросных вод. Дренаж воды из тоннелей в случае разрыва трубопровода
Drain water removal system. Water removal from tunnels in case of pipeline break

Установка опор трубопроводов
Installation of pipelines supports

Стадия Phase	Лист Sheet	Листов Sheets
WD	11	

Joint-Stock Company "Institute HYDROPROJECT" (Subsid. JSC)

Формат А2х4

Inv. Nr. 28285 Date 20.08.2018

Взам.инв.N	Подпись и дата	Инв.N подл.

ВЕДОМОСТЬ РАБОЧИХ ЧЕРТЕЖЕЙ ОСНОВНОГО КОМПЛЕКТА
LIST OF THE WORKING DRAWINGS OF MAIN SET

Лист Sheet	Наименование Description	Примечание Note
1	Общие данные General data	
2	Схема принципиальная Schematic diagram	
3	План разбивки трубопроводов 40PUQ10BR001, 40PUQ10BR002, 40PUQ20BR001, 40PUQ20BR002 на блоки, разрезы 1–1...4–4 Block division plan of pipelines 40PUQ10BR001, 40PUQ10BR002, 40PUQ20BR001, 40PUQ20BR002, sections 1–1...4–4	
4	Спецификация блоков труборoводов 40PUQ10BR001, 40PUQ10BR002, 40PUQ20BR001, 40PUQ20BR002 Blocks specification of pipelines 40PUQ10BR001, 40PUQ10BR002, 40PUQ20BR001, 40PUQ20BR002	
5	План расстановки опор на трубопроводах 40PUQ10BR001, 40PUQ20BR001, ведомость опор трубопроводов 40PUQ10BR001, 40PUQ20BR001 Layout of supports on the pipelines 40PUQ10BR001, 40PUQ20BR001, list of pipelines supports 40PUQ10BR001, 40PUQ20BR001	
6	План разбивки трубопроводов 40PUQ10(20)BR003, 40PUQ10(20)BR004, 40PUQ10(20)BR005, 40PUQ10(20)BR006 на блоки, разрез 5–5, узлы 1, 2 Block division plan of pipelines 40PUQ10(20)BR003, 40PUQ10(20)BR004, 40PUQ10(20)BR005, 40PUQ10(20)BR006 section 5–5, units 1, 2	
7	Разрезы 6–6, 7–7 Sections 6–6, 7–7	
8	Разрезы 8–8...13–13, 15–15...19–19, узлы 3...6 Sections 8–8...13–13, 15–15...19–19, units 3...6	
9	Спецификация блоков трубопроводов 40PUQ10BR003, 40PUQ10BR004, 40PUQ20BR003, 40PUQ20BR004 Specification of pipelines blocks 40PUQ10BR003, 40PUQ10BR004, 40PUQ20BR003, 40PUQ20BR004	
10	Принципиальная схема трубопроводов 40PUQ10BR005, BR006, разрез 14–14, узел 7, спецификация трубопроводов 40PUQ10BR005, BR006 Schematik diagram of pipelines 40PUQ10BR005, BR006, section 14–14, unit 7, specification of pipelines 40PUQ10BR005, BR006	
11	Принципиальная схема трубопроводов 40PUQ20BR005, BR006, узлы 8, 9, спецификация трубопроводов 40PUQ20BR005, BR006 Schematik diagram of pipelines 40PUQ20BR005, BR006, units 8, 9, specification of pipelines 40PUQ20BR005, BR006	
12	Блоки 40PUQ10BR001MR001, 003, 005, 007, 011, 012 Blocks 40PUQ10BR001MR001, 003, 005, 007, 011, 012	
13	Блок 40PUQ10BR001MR002 Block 40PUQ10BR001MR002	
14	Блок 40PUQ10BR001MR004 Block 40PUQ10BR001MR004	
15	Блок 40PUQ10BR001MR006 Block 40PUQ10BR001MR006	
16	Блоки 40PUQ10BR001MR008, 009 Blocks 40PUQ10BR001MR008, 009	
17	Блоки 40PUQ10BR001MR010 Blocks 40PUQ10BR001MR010	
18	Блок 40PUQ10BR001MR013 Block 40PUQ10BR001MR013	
19	Блок 40PUQ10BR001MR015 Block 40PUQ10BR001MR015	
20	Блок 40PUQ10BR001MR016 Block 40PUQ10BR001MR016	
21	Блок 40PUQ10BR002MR018 Block 40PUQ10BR002MR018	
22	Блоки 40PUQ20BR001MR019, 020, 025, 028, 030, 031 Blocks 40PUQ20BR001MR019, 020, 025, 028, 030, 031	
23	Блоки 40PUQ20BR001MR021, 022, 023 Blocks 40PUQ20BR001MR021, 022, 023	
24	Блок 40PUQ20BR001MR024 Block 40PUQ20BR001MR024	
25	Блок 40PUQ20BR001MR027 Block 40PUQ20BR001MR027	
26	Блок 40PUQ20BR001MR029 Block 40PUQ20BR001MR029	
27	Блок 40PUQ20BR001MR032 Block 40PUQ20BR001MR032	
28	Блок 40PUQ20BR001MR033 Block 40PUQ20BR001MR033	
29	Блок 40PUQ20BR002MR035 Block 40PUQ20BR002MR035	
30	Блок 40PUQ10BR003MR001 Block 40PUQ10BR003MR001	
31	Блоки 40PUQ10BR003MR002, 004, 008, 012, 014, 018, 020, 022, 024 Blocks 40PUQ10BR003MR002, 004, 008, 012, 014, 018, 020, 022, 024	
32	Блок 40PUQ10BR003MR003 Block 40PUQ10BR003MR003	
33	Блоки 40PUQ10BR003MR005, 007, 009 Blocks 40PUQ10BR003MR005, 007, 009	
34	Блок 40PUQ10BR003MR011 Block 40PUQ10BR003MR011	
35	Блок 40PUQ10BR003MR013 Block 40PUQ10BR003MR013	
36	Блоки 40PUQ10BR003MR015, 016 Blocks 40PUQ10BR003MR015, 016	
37	Блок 40PUQ10BR003MR017 Block 40PUQ10BR003MR017	
38	Блок 40PUQ10BR003MR019 Block 40PUQ10BR003MR019	
39	Блок 40PUQ10BR003MR021 Block 40PUQ10BR003MR021	
40	Блок 40PUQ10BR003MR023 Block 40PUQ10BR003MR023	
41	Блок 40PUQ10BR003MR025 Block 40PUQ10BR003MR025	
42	Блок 40PUQ10BR004MR026 Block 40PUQ10BR004MR026	
43	Блоки 40PUQ10BR004MR027, 033, 035, 039, 041, 043, 045 Blocks 40PUQ10BR004MR027, 033, 035, 039, 041, 043, 045	
44	Блок 40PUQ10BR004MR028 Block 40PUQ10BR004MR028	
45	Блок 40PUQ10BR004MR030 Block 40PUQ10BR004MR030	
46	Блок 40PUQ10BR004MR032 Block 40PUQ10BR004MR032	
47	Блок 40PUQ10BR004MR034 Block 40PUQ10BR004MR034	
48	Блоки 40PUQ10BR004MR036, 037 Blocks 40PUQ10BR004MR036, 037	
49	Блок 40PUQ10BR004MR038 Block 40PUQ10BR004MR038	
50	Блок 40PUQ10BR004MR040 Block 40PUQ10BR004MR040	
51	Блок 40PUQ10BR004MR042 Block 40PUQ10BR004MR042	
52	Блок 40PUQ10BR004MR044 Block 40PUQ10BR004MR044	
53	Блок 40PUQ10BR004MR046 Block 40PUQ10BR004MR046	
54	Блок 40PUQ20BR003MR047 Block 40PUQ20BR003MR047	
55	Блоки 40PUQ20BR003MR048, 050, 054, 058, 061, 063, 065, 067 Blocks 40PUQ20BR003MR048, 050, 054, 058, 061, 063, 065, 067	
56	Блок 40PUQ20BR003MR049 Block 40PUQ20BR003MR049	
57	Блоки 40PUQ20BR003MR051, 055 Blocks 40PUQ20BR003MR051, 055	
58	Блоки 40PUQ20BR003MR053, 057 Blocks 40PUQ20BR003MR053, 057	
59	Блок 40PUQ20BR003MR059 Block 40PUQ20BR003MR059	
60	Блок 40PUQ20BR003MR060 Block 40PUQ20BR003MR060	
61	Блок 40PUQ20BR003MR062 Block 40PUQ20BR003MR062	
62	Блок 40PUQ20BR003MR064 Block 40PUQ20BR003MR064	
63	Блок 40PUQ20BR003MR066 Block 40PUQ20BR003MR066	
64	Блок 40PUQ20BR003MR068 Block 40PUQ20BR003MR068	
65	Блок 40PUQ20BR004MR069 Block 40PUQ20BR004MR069	
66	Блоки 40PUQ20BR004MR071, 073 Blocks 40PUQ20BR004MR071, 073	
67	Блоки 40PUQ20BR004MR072, 076, 078, 080, 082, 084 Blocks 40PUQ20BR004MR072, 076, 078, 080, 082, 084	
68	Блок 40PUQ20BR004MR075 Block 40PUQ20BR004MR075	
69	Блок 40PUQ20BR004MR077 Block 40PUQ20BR004MR077	
70	Блок 40PUQ20BR004MR079 Block 40PUQ20BR004MR079	
71	Блок 40PUQ20BR004MR081 Block 40PUQ20BR004MR081	
72	Блок 40PUQ20BR004MR083 Block 40PUQ20BR004MR083	
73	Блок 40PUQ20BR004MR085 Block 40PUQ80BR004MR085	
74	Установка опор трубопроводов Installation of pipelines supports	
75	План на отм. –0,700, разрезы 20–20...23–23, узел 10, спецификация Plan at elev. –0,700, section 20–20...23–23, unit 10, specification	

ВЕДОМОСТЬ ССЫЛОЧНЫХ И ПРИЛАГАЕМЫХ ДОКУМЕНТОВ
LIST OF REFERENCE AND ATTACHED DOCUMENTS

Обозначение Designation	Наименование Name	Примечание Note
	Ссылочные документы Reference documents	
R37.KK34.41UQZ.PEB.TW.OK.WD001	41UQZ. Металлические конструкции трубопроводов ответственных потребителей 41UQZ. Metalwork Pipelines of essential services	
R37.KK34.41UQZ.0.KZ.OK.WD001	41UQZ. Строительные конструкции. Геометрия 41UQZ. Structures. Geometry	
R37.KK34.41UUQ.0.AR.OK.WD001	Вентцентры туннелей трубопроводов ответственных потребителей. 41–47 UUQ. Архитектурные решения Vent centers of Tunnels of pipelines essential consumers. 41–47 UUQ. Architectural solutions	
R28.KK34.43UQX.0.KZ.OK.WD001	43UQX. Строительные конструкции. Геометрия 43UQX. Structures. Geometry	

ВЕДОМОСТЬ СПЕЦИФИКАЦИЙ
SPECIFICATION LIST

Лист Sheet	Наименование Description	Примечание Note
4	Спецификация блоков трубопроводов 40PUQ10BR001, 40PUQ10BR002, 40PUQ20BR001, 40PUQ20BR002 Blocks specification of pipelines 40PUQ10BR001, 40PUQ10BR002, 40PUQ20BR001, 40PUQ20BR002	
9	Спецификация блоков трубопроводов 40PUQ10BR003, 40PUQ10BR004, 40PUQ20BR003, 40PUQ20BR004 Blocks specification of pipelines 40PUQ10BR003, 40PUQ10BR004, 40PUQ20BR003, 40PUQ20BR004	
10	Спецификация трубопроводов 40PUQ10BR005, 40PUQ10BR006 Specification of pipelines 40PUQ10BR005, 40PUQ10BR006	
11	Спецификация блоков трубопроводов 40PUQ20BR005, 40PUQ20BR006 Specification of pipelines 40PUQ20BR005, 40PUQ20BR006	

ТЕХНИЧЕСКАЯ ХАРАКТЕРИСТИКА И СВОДКА МАСС ТРУБОПРОВОДОВ
PERFORMANCE AND WEIGHT DATA OF PIPELINES

Обозначение трубопровода Pipeline designation	Наименование транспортируемого продукта Description of transported matter	Подведомственность Subject to	Рабочие условия трубопровода / Pipeline operating conditions: Давление, МПа / Pressure, MPa	Температура, °С / Temperature, °C	Условия гидроиспытаний / Hydraulic test conditions: Давление, МПа / Pressure, MPa	Минимальная температура стенки, °С / Minimal temperature of pipe wall, °C	Диаметр и толщина стенки трубопровода Dxs, мм / Diameter and thickness of pipe wall Dxs, mm	Масса трубопроводов, кг / Pipeline weight, kg: Общая / Total	В том числе / Including: Трубопровода / Pipeline weight	Опор / Support weight	Арматуры / Reinforcement weight
40PUQ10BR001	Морская вода Sea water	ПНАЭ Г–7–008–89 PNAE G–7–008–89	0,6	32	1,0	19	219,1x7,04	2248,1	2177,7	70,4	*
40PUQ10BR002			0,3	38	0,6			26,9	26,9	–	*
40PUQ20BR001			0,6	32	1,0			2410,0	2327,9	82,1	*
40PUQ20BR002			0,3	38	0,6			26,9	26,9	–	*
40PUQ10BR003		ПНАЭ Г–7–008–89 PNAE G–7–008–89	0,3	38	0,6	19	89x3	115,2	114,7	0,5	*
40PUQ10BR004								110,1	109,6	0,5	*
40PUQ20BR003								78,4	76,9	1,5	*
40PUQ20BR004								68,7	67,2	1,5	*
40PUQ10BR005		СНиП 3.05.05–84 SNiP 3.05.05–84	0,3	38	0,6	19	180x16,4	245,8	244,8	1,0	*
40PUQ10BR006								212,2	211,2	1,0	*
40PUQ20BR005								165,8	164,8	1,0	*
40PUQ20BR006								187,0	186,0	1,0	*

* Вес арматуры уточняется при выборе поставщика.
* The weight of reinforcement is specified when selecting a supplier.

МЕТОДЫ И ОБЪЕМЫ КОНТРОЛЯ СВАРНЫХ СОЕДИНЕНИЙ
METHODS AND DEGREE OF INSPECTION OF WELDED JOINTS

Объем контроля / Degree of inspection: Неразрушающего, % / Non–destructive, %; Разрушающего / Destructive

Номер трубопровода Pipeline number	Категория сварных соединений или категория трубопровода Category of welded joints or category of pipeline	Номинальная толщина свариваемых деталей, мм Nominal thickness of welded parts, mm	Визуального и измерительного Visual and measuring inspection	Гидравлические испытания Hydraulic test	Капилярного или магнитопорошкового Capillary or magnetic particle inspection	Радиографического Radiographic inspection	Ультразвукового Ultrasonic inspection	Прогонка металлическим калибром Run with metal pass	Контроль герметичности Leakproofness test	Определение механических свойств Determination of stress–strain properties	Металлографические исследования Metallographic examination	Испытания на стойкость к межкристаллитной коррозии Intercrystalline corrosion proofness test
40PUQ10BR003	IIв	3	100	100	100	50	50	–	–	–	–	–
40PUQ10BR004												
40PUQ20BR003												
40PUQ20BR004												

ХИМИЧЕСКИЙ СОСТАВ МОРСКОЙ ВОДЫ
CHEMICAL COMPOSITION OF SEA WATER

	Название Element	Величина Valne	Примечание Note
1	Кальций, мг/л Calcium, mg/l	360...420	
2	Магний, мг/л Magnesium, mg/l	1248...1322	
3	Натрий, мг/л Sodium, mg/l	7500...8500	
4	Калий, мг/л Potassium, mg/l	390...415	
5	Гидрокарбонаты, мг/л Hydrocarbonates, mg/l	73,2...109,8	
6	Карбонаты, мг/л Carbonates, mg/l	67,2...76,8	
7	Сульфаты, мг/л Sulphates, mg/l	2709...2761	
8	Хлориды, мг/л Chlorides, mg/l	19500	
9	Общее содержание, % General salt content, %	3,6000	
10	Жесткость (CaC_3), мг/л	6500	
11	Водородный показатель pH pH value	8	
12	Нерастворимые вещества, мг/л Insaluble matters, mg/l	20	
13	Биологические данные, мг/100 м^3 Biological assay data, mg/100 m^3	70	

УСЛОВНЫЕ ОБОЗНАЧЕНИЯ
LEGEND

	Граница проектирования Design boundary
	Переход Adapter
	Спуск воды из трубопровода Water discharge from pipeline
	Соединение трубопроводов Connection of pipeline
	Соединение трубопроводов отсутствует No connection of pipeline
5	Порядковый номер скользящей опоры Sequence number of sliding support
1	Порядковый номер неподвижной опоры Seguence number of fixed support
105	Порядковый номер блока трубопровода Sequence number of pipeline block
	Направление движения среды Medium motion direction
	Рукав напорный Delivery hose
	Игольчатый вентиль Needle valve
	Двустворчатый клапан Butterfly valve
	Затвор обратный Check valve
	Граница блока Limit of block
	Точка контроля и обозначение измеряемого параметра Check point and designation of the parameter to be measured

ОБЩИЕ УКАЗАНИЯ

1 Рабочие чертежи разработаны в соответствии с контрактом No77–258/1415800 на разработку рабочей документации.

2 Рабочая документация разработана в соответствии с Российскими нормативными документами, действующими на 15.05.2009.

3 Классификация элементов трубопроводов:

трубопроводы опорожнения PEB (ø219,1x7,04):
- класс безопасности 2 по НП–001–97 (ПНАЭ Г–01–011–97) "Общие положения обеспечения безопасности атомных станций." ОПБ–88/97;
- группа В по ПНАЭ Г–7–008–89 "Правила устройства и безопасной эксплуатации оборудования и трубопроводов атомных энергетических установок";
- категория сейсмостойкости I по НП–031–01 "Нормы проектирования сейсмостойких атомных станций";

трубопроводы дренажа туннелей (ø89x3):
- класс безопасности 3 по НП–001–97 (ПНАЭ Г–01–011–97) "Общие положения обеспечения безопасности атомных станций." ОПБ–88/97;
- группа С по ПНАЭ Г–7–008–89 "Правила устройства и безопасной эксплуатации оборудования и трубопроводов атомных энергетических установок";
- категория сейсмостойкости I по НП–031–01 "Нормы проектирования сейсмостойких атомных станций";

трубопроводы осушения туннелей (ø180x16,4):
- класс безопасности 4 по НП–001–97 (ПНАЭ Г–01–011–97) "Общие положения обеспечения безопасности атомных станций." ОПБ–88/97;
- категория сейсмостойкости II по НП–031–01 "Нормы проектирования сейсмостойких атомных станций";

4 Толщина труб принята по расчету на внутреннее давление воды с учетом увеличения толщины стенки труб на величину коррозии стенок труб в течении всего периода эксплуатации.

5 Опорожнение трубопроводов PEB предусматривается через дренажные узлы, которые устанавливаются в нижних точках трубопроводов со сбросом воды в специально предусмотренные дренажные приямки в туннелях UQZ.

Диаметр дренажных узлов принят из условия самотечного опорожнения трубопроводов в течение двух часов.

Трубопроводы опорожнения PEB прокладываются в туннелях 41UQZ с уклоном в сторону слива воды в приямки. Величина уклона трубопроводов определяется величиной уклона дна туннелей.

6 Дренаж туннелей и сброс воды при опорожнении трубопроводов PEB в сифонный колодец 43UQX осуществляется артезианскими насосами, всасывающие патрубки которых находятся в дренажных приямках.

7 Осушение туннелей в случае разрыва трубопровода предусматривается переносными погружными насосами со сбросом откачиваемой воды в отводящий канал 42UQN.

8 Трубопроводы дренажа и трубопроводы осушения туннелей прокладываются в помещении 41UUQ, в земле и по территории сифонного колодца 43UQX.

9 Компенсация температурных удлинений осуществляется за счет естественных углов поворота трассы трубопроводов.

Все усилия и моменты, возникающие от сочетания действующих нагрузок (осевых, боковых и весовых), воспринимаются неподвижными опорами.

10 Монтаж трубопроводов опорожнения PEB осуществляется из блоков с фланцевыми соединениями. Трубопроводы изготавливаются из углеродистой стали по ASME–SA–106 Gr.B. Фитинги и фланцы изготавливаются из углеродистой стали по ASME–SA–105.

Монтаж трубопроводов дренажа туннелей и трубопроводов осушения туннелей осуществляется из блоков на сварке. Трубопроводы 89x3 изготавливаются из титанового сплава. Трубопроводы 180x16,4 изготавливаются из полиэтилена.

Сборка трубопроводов осуществляется непосредственно на стройке из деталей (трубы, отводы, фланцы блоков).

11 Сварные соединения по ПНАЭ Г–7–010–89 "Оборудование и трубопроводы атомных энергетических установок. Сварные соединения и наплавки. Правила контроля" для трубопроводов дренажа туннелей относятся к категории II, подкатегории IIв. Контроль качества сварных соединений по ПНАЭ Г–7–010–89 "Оборудование и трубопроводы атомных энергетических установок. Сварные соединения и наплавки. Правила контроля".

12 Торцевая сварка элементов полиэтиленовых трубопроводов выполняется сварочным аппаратом, оснащенным гидравлическим приводом с ЧПУ с блоком протоколирования. Контроль качества сварных соединений по СНиП 3.05.05–84 "Технологическое оборудование и технологические трубопроводы".

13 Трубопроводы опорожнения PEB монтируются с обязательным устройством антикоррозийного защитного покрытия внутренней и наружной поверхности труб от влияния морской воды, грунта и кислорода воздуха в соответствии с техническими требованиями R28.KK36.0.0.TW.TT.WD002.

Данные работы выполняются отдельными проектами и в состав данного комплекта рабочей документации не входят.

14 Строительная часть выполняется по чертежам пакета 3 10 2 8.

15 Узлы проходок трубопроводов через железобетонные конструкции сифонного колодца 43UQX в состав данного комплекта рабочей документации не входят.

GENERAL GUIDELINES

1 The working drawings have been developed in accordance with basic provisions of the Contract No77–258/1415800 on elaboration of working documentation.

2 Working documents have been worked out in compliance with the Russian regulatory documents in force as on 15.05.2009.

3 Classification of pipelines elements:

emptying pipelines PEB (ø219,1x7,04):
- safety class 2 NP–001–97 (PNAE G–01–011–97) "General regulations on safety assurance at Nuclear power plants". OPB – 88/97;
- group B as per PNAE G–7–008–89 "Regulations on arrangement and safe operation of equipment and pipelines at Nuclear power plants";
- seismic stability category I in conformity with NP–031–01 "Design Standards for aseismic nuclear power stations";

pipelines for drainage of tunnels (ø89x3):
- safety class 3 NP–001–97 (PNAE G–01–011–97) "General regulations on safety assurance at Nuclear power plants". OPB – 88/97;
- group C as per PNAE G–7–008–89 "Regulations on arrangement and safe operation of equipment and pipelines at Nuclear power plants";
- seismic stability category I in conformity with NP–031–01 "Design Standards for aseismic nuclear power stations";

pipelines for drying–out of tunnels (ø180x16,4):
- safety class 4 NP–001–97 (PNAE G–01–011–97) "General regulations on safety assurance at Nuclear power plants". OPB – 88/97;
- seismic stability category II in conformity with NP–031–01 "Design Standards for aseismic nuclear power stations";

4 Thickness of pipes is accepted rating the internal pressure of water considering increase of pipe wall thickness to pipe walls corrosion value during the whole period of operation.

5 Pipelines PEB emptying is to be executed through drain units that should be placed in lower points of pipelines and imply water discharge to the drainage pits in the tunnels UQZ.

Drainage units diameter is accepted due to pipelines gravity emptying within two hours.

Emptying pipelines PEB are to be laid out in tunnels 41UQZ on the slope towards water discharge into the pits. Pipelines gradient is determined by the tunnel floor slope.

6 Tunnels drainage and water discharge at emptying of PEB pipelines into the siphon well 43UQX is carried out by artesian pumps, suction tubes of which are placed in the drainage pits.

7 Tunnels drying–out in case of pipeline break is to be carried out by portable submerged–type pumps with drainage water discharge into the outlet canal 42UQN.

8 Drainage and drying–out pipelines are to be laid in compartment 41UUQ, in the ground and in the territory of the siphon well 43UQX.

9 Temperature rolling–out compensation is carried out due to natural turning angle of pipeline route.

All the forces and moments appeared from load combination (axial load, side load and weight load) are sustained by fixed supports.

10 Placing of emptying pipelines PEB is to be carried out of blocks by flange connections. Pipelines are made of carbon steel ASME–SA–106 Gr.B. The fittings and the flanges are made of carbon steel in accordance with ASME–SA–105.

Placing of drainage and drying–out pipelines is to be carried out of blocks at welding. Pipelines 89x3 are made of titanium alloy. Pipelines 180x16,4 are made of NDPE.

Assembly of pipelines is carried out directly at site of parts (pipes, pipe bends, flanges of blocks).

11 Welding joints are as per PNAE G–7–010–89 "Equipment and pipelines for Nuclear power plants. Welding joints and depositions. Rules of control" for drainage of tunnels are related to category II, subcategory IIb. Welding joints quality control is as per PNAE G–7–010–89 "Equipment and pipelines for Nuclear power plants. Welding joints and depositions. Rules of control".

12 End welding of polyethylene pipeline elements is performed by a welding machine equipped with a hydraulic CNC drive with a logging unit. Welding joints quality control is as per SNiP 3.05.05–84 "Technological equipment and technological pipelines".

13 Pipelines PEB emptying are to be laid using anticorrosion protection coating of internal and external surfaces of pipes from sea water, ground and atmospheric oxygen impact in accordance with the technical requirements of R28.KK36.0.0.TW.TT.WD002.

The given works are to be implemented by separate designs and are not in the scope of present set of working documentation.

14 Civil part is to be implemented on drawings of package 3 10 2 8.

15 Nodes penetrations of pipelines through concrete structures siphon well 43UQX part of the documentation package are not included.

СХЕМА РАСПОЛОЖЕНИЯ
KEY PLAN

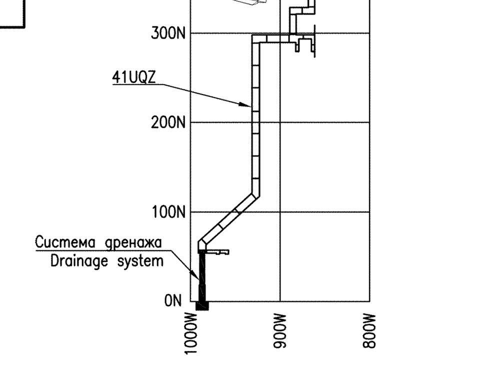

Package Number 3 13 6 63

File: R37 KK34 41UQZ PUQ TW OK WD001_01=0

Rev N	Issue N	Issued for	Signature	Issue sheet N

Принял / Accepted	Kats		FSUE "Atomenergoproekt" Moscow 2018
Arch. No		Date	
При переписке в ссылке на документ (лист документа) следует указывать его обозначение, приведенное в основной надписи In correspondence referring to the document (sheet of the document) it is necessary to specify its designation, given in the basic inscription		Данный чертеж не подлежит размножению или передаче другим организациям и лицам без согласия АО "Мособлгидропроект" This drawing is not to be reproduced or transferred to other organizations or private persons without approval of Joint–stock Company "Institute HYDROPROJECT"	

NUCLEAR POWER CORPORATION OF INDIA LTD

R37.KK34.41UQZ.PUQ.TW.OK.WD001

АЭС "КУДАНКУЛАМ" БЛОК 4
NPP "KUDANKULAM" UNIT 4

Изм. Rev.	N уч. N pat.	Лист Sheet	N док. Doc. No	Подпись Signature	Дата Date
Утвердил Approved		Togoev			10.18
Н. контр. Inspector		Alfimova			10.18
Разраб. Designed		Panov			10.18

41UQZ
Система дренажа сбросных вод. Дренаж воды из туннелей в случае разрыва трубопровода
41UQZ
Drain water removal system. Water removal from tunnels in case of pipeline break

Стадия Phase	Лист Sheet	Листов Sheets
WD	1	75

Общие данные
General data

Joint-stock Company "Institute HYDROPROJECT" Dedowsk 2018

Format A2x4

Inv.Nr 29741 Date 22.01.19

Orig. arch. Nr.	Date	Replace arch. Nr
450	02.11.2018	

СХЕМА ПРИНЦИПИАЛЬНАЯ
SCHEMATIC DIAGRAM

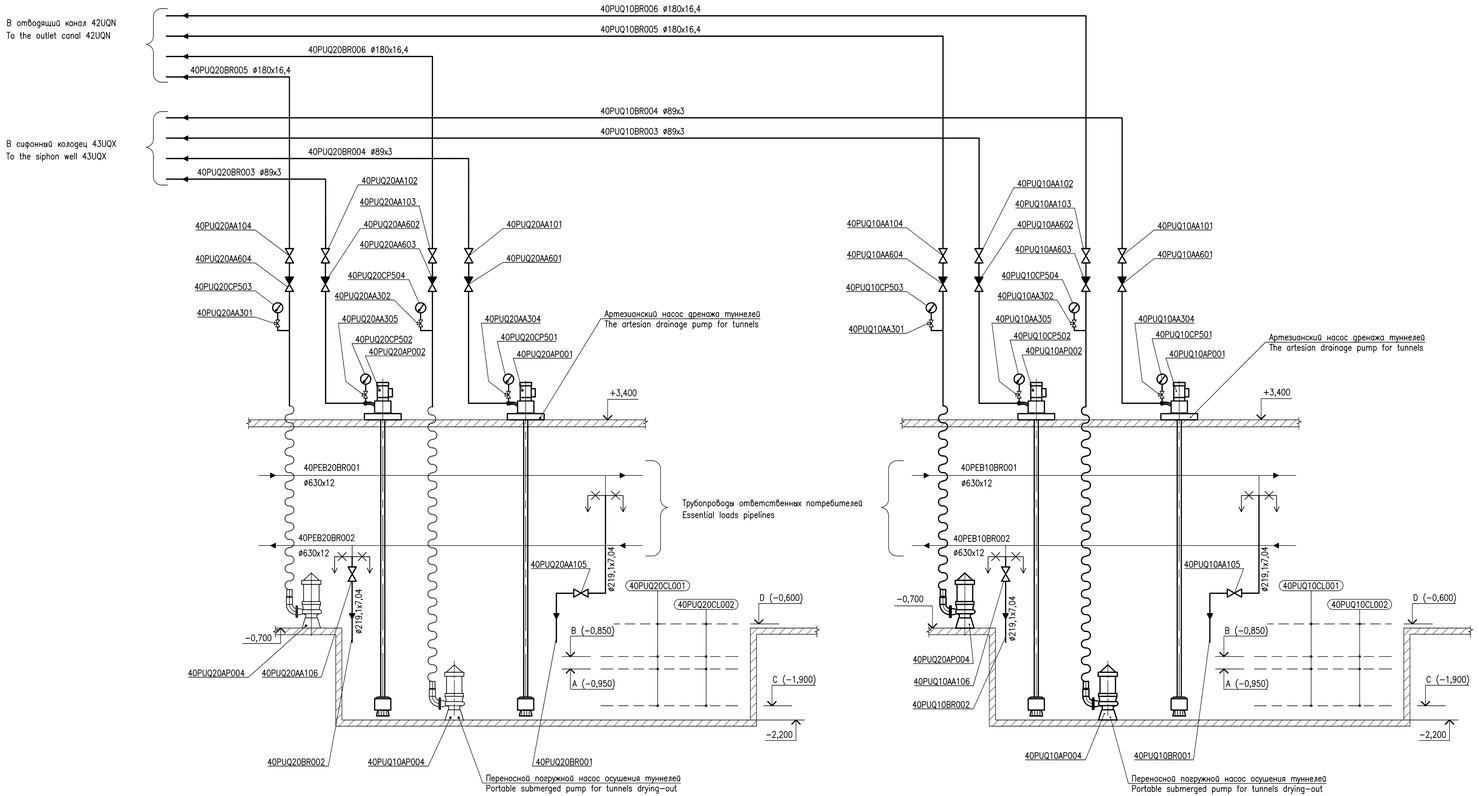

A – Включение первого насоса
Actuation of the first pump
B – Включение второго насоса
Actuation of the second pump
C – Отключение насосов
Switching-off of pumps
D – Включение аварийного сигнала затопления
Actuation of the emergency flooding signal

ПЕРЕЧЕНЬ ЭЛЕМЕНТОВ
LIST OF ELEMENTS

Поз. по СЗС Item as per specification of buildings and compartments	Код по системе KKS Code as per KKS	Наименование Name	Кол. Quant.	Примечание Note
	40PUQ10AP001 40PUQ10AP002 40PUQ20AP001 40PUQ20AP002	Агрегат насосный артезианского типа Artesian pump unit of type	4	Q=20 м³/ч H=0,3 МПа Q=20 m³/h H=0,3 MPa
	40PUQ10CP501 40PUQ10CP502 40PUQ20CP501 40PUQ20CP502	Манометр Pressure gauge	4	Комплектно с агрегатом насосным артезианского типа Complete with artesian pump unit
	40PUQ10AA304 40PUQ10AA305 40PUQ20AA304 40PUQ20AA305	Кран под манометр Pressure gauge valve	4	Комплектно с агрегатом насосным артезианского типа Complete with artesian pump unit
	40PUQ10AP004 40PUQ20AP004	Электронасос погружной Submerged pump	2	Q=180 м³/ч H=0,3 МПа Q=180 m³/h H=0,3 MPa
	40PUQ10AA103 40PUQ10AA104 40PUQ20AA103 40PUQ20AA104	Двустворчатый клапан Butterfly valve	4	150 NB Класс 150 150 NB Class 150
	40PUQ10AA105 40PUQ10AA106 40PUQ20AA105 40PUQ20AA106	Двустворчатый клапан Butterfly valve	4	200 NB Класс 150 200 NB Class 150
	40PUQ10AA101 40PUQ10AA102 40PUQ20AA101 40PUQ20AA102	Двустворчатый клапан Butterfly valve	4	80 NB Класс 150 80 NB Class 150
	40PUQ10AA603 40PUQ10AA604 40PUQ20AA603 40PUQ20AA604	Затвор обратный Check valve	4	150 NB Класс 150 150 NB Class 150
	40PUQ10AA601 40PUQ10AA602 40PUQ20AA601 40PUQ20AA602	Затвор обратный Check valve	4	80 NB Класс 150 80 NB Class 150
	40PUQ10CP503 40PUQ10CP504 40PUQ20CP503 40PUQ20CP504	Манновакуумметр показывающий Combined pressure-and-vacuum gauge indicating	4	
	40PUQ10AA301 40PUQ10AA302 40PUQ20AA301 40PUQ20AA302	Игольчатый вентиль Needle valve	4	10 NB Класс 150 10 NB Class 150
	40PUQ10CL001 40PUQ10CL002 40PUQ20CL001 40PUQ20CL002	Погружной датчик уровня Submersible Level Transmitter	4	

СХЕМА РАСПОЛОЖЕНИЯ
KEY PLAN

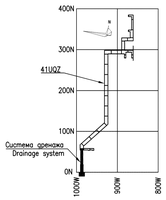

Package Number 3 13 6 63
File: R37 KK34 41UQZ PUQ TW OK WD001_02=0

Данный чертеж не подлежит размножению или передаче другим организациям и лицам без согласия АО "Мособлгидропроект"

This drawing is not to be reproduced or transferred to other organizations or private persons without approval of Joint-stock Company "Institute HYDROPROJECT"

Изм. Rev.	N уч. N pot.	Лист Sheet	N док. Doc. No	Подпись Signature	Дата Date
Утверждал Approved		Panov			10.18
Н. контр. Inspector		Afimova			10.18
Разраб. Designed		Solodonkova			10.18

R37.KK34.41UQZ.PUQ.TW.OK.WD001

АЭС "КУДАНКУЛАМ" БЛОК 4
NPP "KUDANKULAM" UNIT 4

41UQZ
Система дренажа сбросных вод. Дренаж воды из туннелей в случае разрыва трубопровода
41UQZ
Drain water removal system. Water removal from tunnels in case of pipeline break

Схема принципиальная
Schematic diagram

Стадия Phase	Лист Sheet	Листов Sheets
WD	2	

Joint-Stock Company "Institute HYDROPROJECT" Dedicated 2018

Format A2x3

Inv.N 29741 Date 22.01.19

Инв.№ arch. №	Подпись Date
	22.11.2018

Инв. arch. № 450

ПЛАН РАЗБИВКИ ТРУБОПРОВОДОВ 40PUQ10BR001, 40PUQ10BR002,40PUQ20BR001, 40PUQ20BR002 НА БЛОКИ.
BLOCK DIVISION PLAN OF PIPELINES 40PUQ10BR001, 40PUQ10BR002,40PUQ20BR001, 40PUQ20BR002

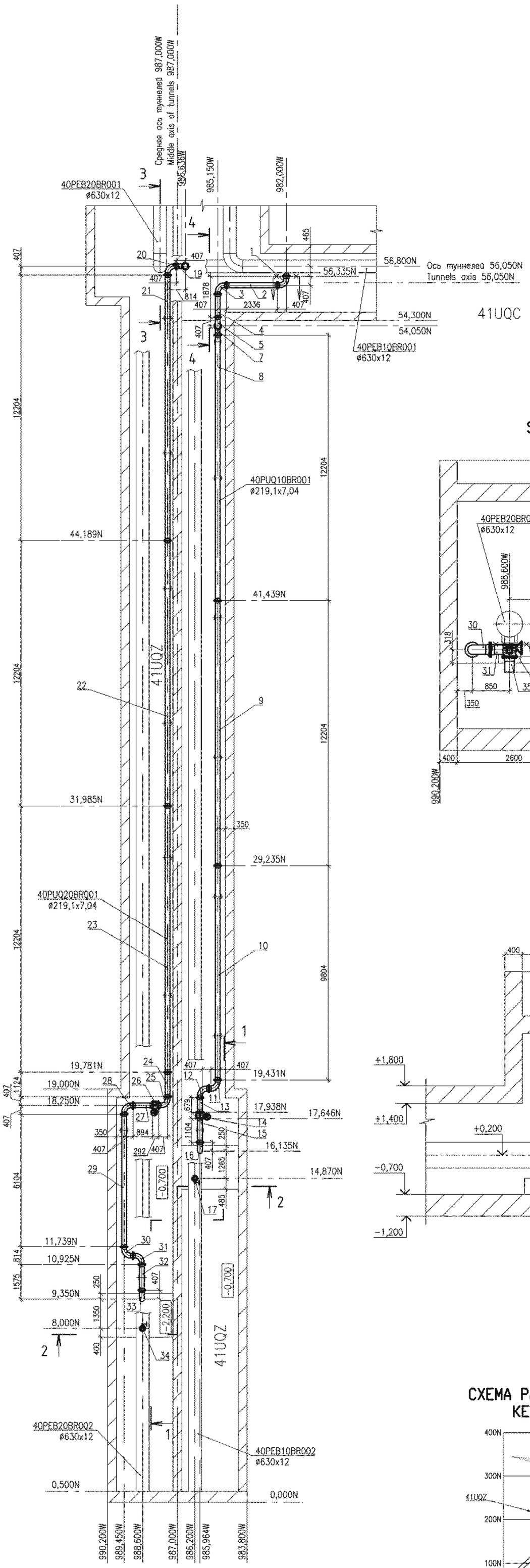

РАЗРЕЗ 4–4
SECTION 4–4

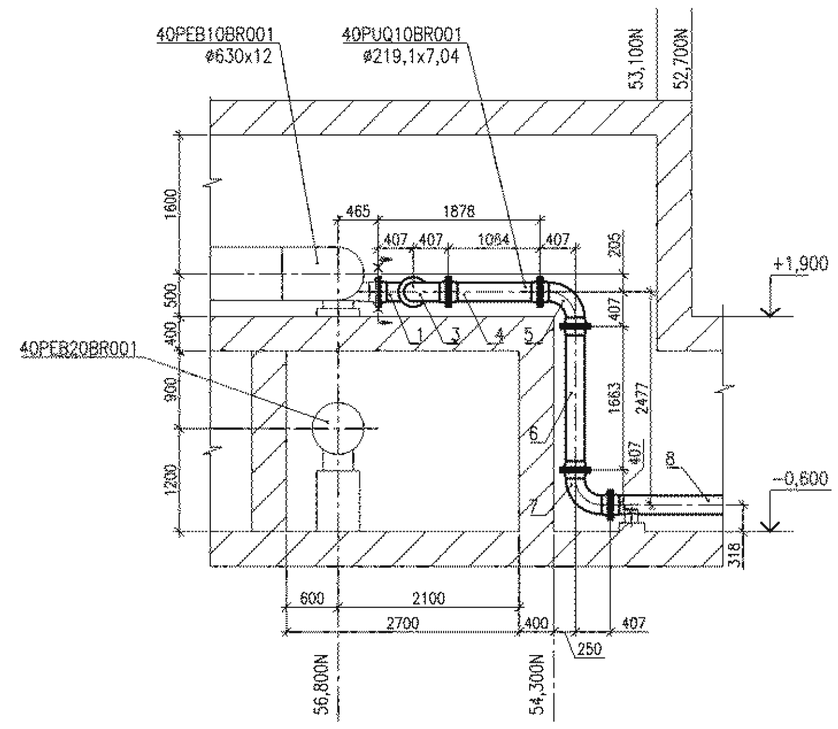

РАЗРЕЗ 2–2
SECTION 2–2

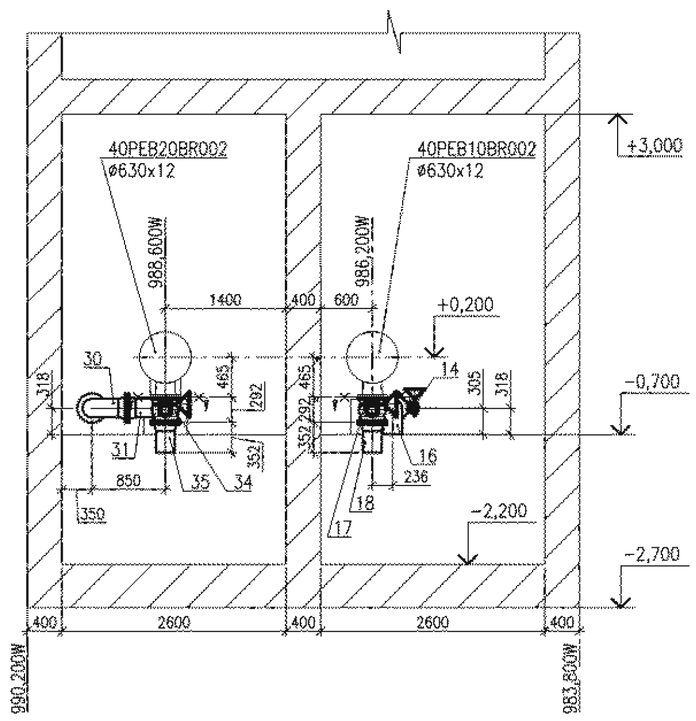

РАЗРЕЗ 3–3
SECTION 3–3

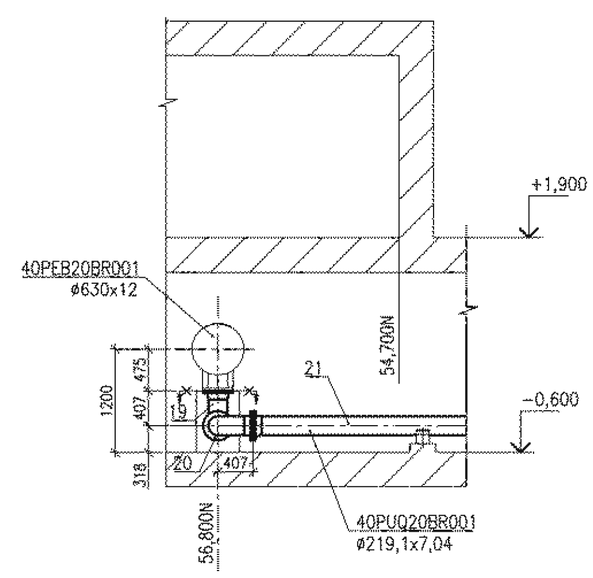

РАЗРЕЗ 1–1
SECTION 1–1

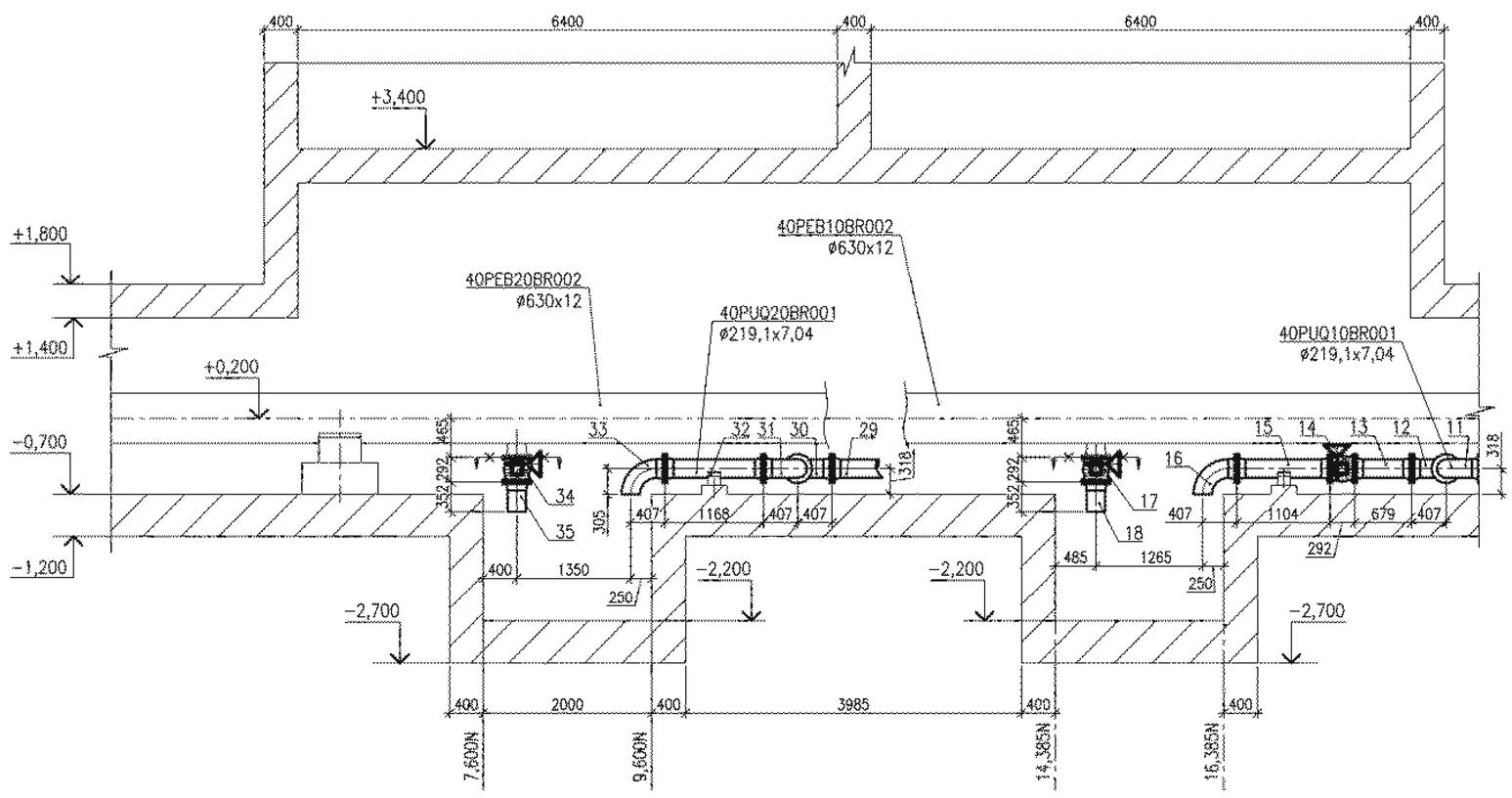

СХЕМА РАСПОЛОЖЕНИЯ
KEY PLAN

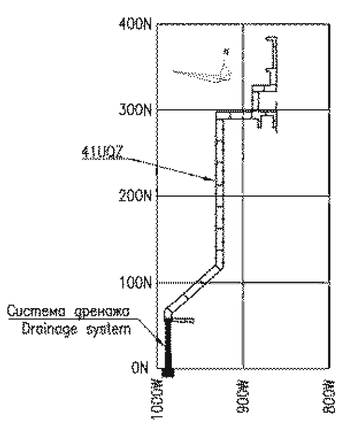

Package Number 3 13 6 63
File: R37 KK34 41UQZ PUQ TW OK WD001_03=0

Данный чертеж не подлежит размножению или передаче другим организациям и лицам без согласия АО "Мособлгидропроект"

This drawing is not to be reproduced or transferred to other organizations or private persons without approval of Joint-stock Company "Institute HYDROPROJECT"

Изм. / Rev.	N уч. / N pat.	Лист / Sheet	N док. / Doc. No	Подпись / Signature	Дата / Date
Утверждл / Approved		Panov			10.18
Н. контр. / Inspector		Alfimova			10.18
Разраб. / Designed		Solodovnikova			10.18

R37.KK34.41UQZ.PUQ.TW.OK.WD001

АЭС "КУДАНКУЛАМ" БЛОК 4
NPP "KUDANKULAM" UNIT

41UQZ
Система дренажа сбросных вод. Дренаж воды из туннелей в случае разрыва трубопровода
41UQZ
Drain water removal system. Water removal from tunnels in case of pipeline break

План разбивки трубопроводов 40PUQ10BR001, 40PUQ10BR002, 40PUQ20BR001, 40PUQ20BR002 на блоки, разрезы 1–1...4–4
Block division plan of pipelines 40PUQ10BR001, 40PUQ10BR002, 40PUQ20BR001, 40PUQ20BR002, sections 1–1...4–4

Стадия / Phase	Лист / Sheet	Листов / Sheets
WD	3	

Joint-stock Company "Institute HYDROPROJECT" Dedovsk 2018

Format A1

Inv.Nr 29741 Date 22.01.19

Orig. arch. Nr	Date	Replace arch. Nr
450	02.11.2016	

СПЕЦИФИКАЦИЯ БЛОКОВ ТРУБОПРОВОДОВ 40PUQ10BR001, 40PUQ10BR002, 40PUQ20BR001, 40PUQ20BR002
BLOCKS SPECIFICATION OF PIPELINES 40PUQ10BR001, 40PUQ10BR002, 40PUQ20BR001, 40PUQ20BR002

Поз. Pos.	Обозначение Designation	Наименование Name of block	Кол. Q-ty	Масса ед., кг Unit weight, kg	Примечание Note
26	ASME B16.34-2006	Двустворчатый клапан 200 NB; Класс 150 Butterfly valve 200 NB; Class 150 40PUQ20AA105	1	–	
27	R37.KK34.41UQZ.PUQ.TW.OK.WD001 лист 25 Sheet 25	Блок 40PUQ20BR001MR027 Block 40PUQ20BR001MR027	1	60,8	
28	R37.KK34.41UQZ.PUQ.TW.OK.WD001 лист 22 Sheet 22	Блок 40PUQ20BR001MR028 Block 40PUQ20BR001MR028	1	65,9	
29	R37.KK34.41UQZ.PUQ.TW.OK.WD001 лист 26 Sheet 26	Блок 40PUQ20BR001MR029 Block 40PUQ20BR001MR029	1	252,6	
30	R37.KK34.41UQZ.PUQ.TW.OK.WD001 лист 22 Sheet 22	Блок 40PUQ20BR001MR030 Block 40PUQ20BR001MR030	1	65,9	
31	R37.KK34.41UQZ.PUQ.TW.OK.WD001 лист 22 Sheet 22	Блок 40PUQ20BR001MR031 Block 40PUQ20BR001MR031	1	65,9	
32	R37.KK34.41UQZ.PUQ.TW.OK.WD001 лист 27 Sheet 27	Блок 40PUQ20BR001MR032 Block 40PUQ20BR001MR032	1	70,9	
33	R37.KK34.41UQZ.PUQ.TW.OK.WD001 лист 28 Sheet 28	Блок 40PUQ20BR001MR033 Block 40PUQ20BR001MR033	1	48,2	
34	ASME B16.34-2006	Двустворчатый клапан 200 NB; Класс 150 Butterfly valve 200 NB; Class 150 40PUQ20AA106	1	–	
35	R37.KK34.41UQZ.PUQ.TW.OK.WD001 лист 29 Sheet 29	Блок 40PUQ20BR002MR035 Block 40PUQ20BR002MR035	1	26,9	

Поз. Pos.	Обозначение Designation	Наименование Name of block	Кол. Q-ty	Масса ед., кг Unit weight, kg	Примечание Note
14	ASME B16.34-2006	Двустворчатый клапан 200 NB; Класс 150 Butterfly valve 200 NB; Class 150 40PUQ10AA105	1	–	
15	R37.KK34.41UQZ.PUQ.TW.OK.WD001 лист 19 Sheet 19	Блок 40PUQ10BR001MR015 Block 40PUQ10BR001MR015	1	68,5	
16	R37.KK34.41UQZ.PUQ.TW.OK.WD001 лист 20 Sheet 20	Блок 40PUQ10BR001MR016 Block 40PUQ10BR001MR016	1	48,2	
17	ASME B16.34-2006	Двустворчатый клапан 200 NB; Класс 150 Butterfly valve 200 NB; Class 150 40PUQ10AA106	1	–	
18	R37.KK34.41UQZ.PUQ.TW.OK.WD001 лист 21 Sheet 21	Блок 40PUQ10BR002MR018 Block 40PUQ10BR002MR018	1	26,9	
19	R37.KK34.41UQZ.PUQ.TW.OK.WD001 лист 22 Sheet 22	Блок 40PUQ20BR001MR019 Block 40PUQ20BR001MR019	1	65,9	
20	R37.KK34.41UQZ.PUQ.TW.OK.WD001 лист 22 Sheet 22	Блок 40PUQ20BR001MR020 Block 40PUQ20BR001MR020	1	65,9	
21	R37.KK34.41UQZ.PUQ.TW.OK.WD001 лист 23 Sheet 23	Блок 40PUQ20BR001MR021 Block 40PUQ20BR001MR021	1	476,9	
22	R37.KK34.41UQZ.PUQ.TW.OK.WD001 лист 23 Sheet 23	Блок 40PUQ20BR001MR022 Block 40PUQ20BR001MR022	1	476,9	
23	R37.KK34.41UQZ.PUQ.TW.OK.WD001 лист 23 Sheet 23	Блок 40PUQ20BR001MR023 Block 40PUQ20BR001MR023	1	476,9	
24	R37.KK34.41UQZ.PUQ.TW.OK.WD001 лист 24 Sheet 24	Блок 40PUQ20BR001MR024 Block 40PUQ20BR001MR024	1	69,3	
25	R37.KK34.41UQZ.PUQ.TW.OK.WD001 лист 22 Sheet 22	Блок 40PUQ20BR001MR025 Block 40PUQ20BR001MR025	1	65,9	

Поз. Pos.	Обозначение Designation	Наименование Name of block	Кол. Q-ty	Масса ед., кг Unit weight, kg	Примечание Note
1	R37.KK34.41UQZ.PUQ.TW.OK.WD001 лист 12 Sheet 12	Блок 40PUQ10BR001MR001 Block 40PUQ10BR001MR001	1	65,9	
2	R37.KK34.41UQZ.PUQ.TW.OK.WD001 лист 13 Sheet 13	Блок 40PUQ10BR001MR002 Block 40PUQ10BR001MR002	1	113,9	
3	R37.KK34.41UQZ.PUQ.TW.OK.WD001 лист 12 Sheet 12	Блок 40PUQ10BR001MR003 Block 40PUQ10BR001MR003	1	65,9	
4	R37.KK34.41UQZ.PUQ.TW.OK.WD001 лист 14 Sheet 14	Блок 40PUQ10BR001MR004 Block 40PUQ10BR001MR004	1	67,0	
5	R37.KK34.41UQZ.PUQ.TW.OK.WD001 лист 12 Sheet 12	Блок 40PUQ10BR001MR005 Block 40PUQ10BR001MR005	1	65,9	
6	R37.KK34.41UQZ.PUQ.TW.OK.WD001 лист 15 Sheet 15	Блок 40PUQ10BR001MR006 Block 40PUQ10BR001MR006	1	89,4	
7	R37.KK34.41UQZ.PUQ.TW.OK.WD001 лист 12 Sheet 12	Блок 40PUQ10BR001MR007 Block 40PUQ10BR001MR007	1	65,9	
8	R37.KK34.41UQZ.PUQ.TW.OK.WD001 лист 16 Sheet 16	Блок 40PUQ10BR001MR008 Block 40PUQ10BR001MR008	1	476,9	
9	R37.KK34.41UQZ.PUQ.TW.OK.WD001 лист 16 Sheet 16	Блок 40PUQ10BR001MR009 Block 40PUQ10BR001MR009	1	476,9	
10	R37.KK34.41UQZ.PUQ.TW.OK.WD001 лист 17 Sheet 17	Блок 40PUQ10BR001MR010 Block 40PUQ10BR001MR010	1	388,6	
11	R37.KK34.41UQZ.PUQ.TW.OK.WD001 лист 12 Sheet 12	Блок 40PUQ10BR001MR011 Block 40PUQ10BR001MR011	1	65,9	
12	R37.KK34.41UQZ.PUQ.TW.OK.WD001 лист 12 Sheet 12	Блок 40PUQ10BR001MR012 Block 40PUQ10BR001MR012	1	65,9	
13	R37.KK34.41UQZ.PUQ.TW.OK.WD001 лист 18 Sheet 18	Блок 40PUQ10BR001MR013 Block 40PUQ10BR001MR013	1	52,9	

Номера позиций данной спецификации соответствуют номерам блоков на листе 3.
Position numbers of this specification correspond with blocks numeration on Sheet 3.

Package Number 3 13 6 63
File: R37 KK34 41UQZ PUQ TW OK WD001_04=0

Данный чертеж не подлежит размножению или передаче другим организациям и лицам без согласия АО "Мособлгидропроект"

This drawing is not to be reproduced or transferred to other organizations or private persons without approval of Joint-stock Company "Institute HYDROPROJECT"

Изм. Rev.	N уч. N pat.	Лист Sheet	N док. Doc. No	Подпись Signature	Дата Date
Утвердил Approved		Panov			10.18
Н. контр. Inspector		Alfimova			10.18
Разраб. Designed		Solodovnikova			10.18

R37.KK34.41UQZ.PUQ.TW.OK.WD001

АЭС "КУДАНКУЛАМ" БЛОК 4
NPP "KUDANKULAM" UNIT 4

41UQZ
Система дренажа сбросных вод. Дренаж воды из туннелей в случае разрыва трубопровода
41UQZ
Drain water removal system. Water removal from tunnels in case of pipeline break

Стадия Phase	Лист Sheet	Листов Sheets
WD	4	

Спецификация блоков трубороводов 40PUQ10BR001, 40PUQ10BR002, 40PUQ20BR001, 40PUQ20BR002
Blocks specification of pipelines 40PUQ10BR001, 40PUQ10BR002, 40PUQ20BR001, 40PUQ20BR002

Joint-Stock Company
"Institute HYDROPROJECT"
Dedowsk 2018

Format A2

Inv.Nr 29741 Date 22.01.19

Orig. arch. Nr.	Date	Replace arch. Nr.
450	02.11.2018	

ПЛАН РАССТАНОВКИ ОПОР НА ТРУБОПРОВОДАХ 40PUQ10BR001, 40PUQ20BR001.
LAYOUT OF SUPPORTS ON THE PIPELINES 40PUQ10BR001, 40PUQ20BR001.

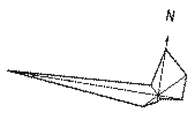

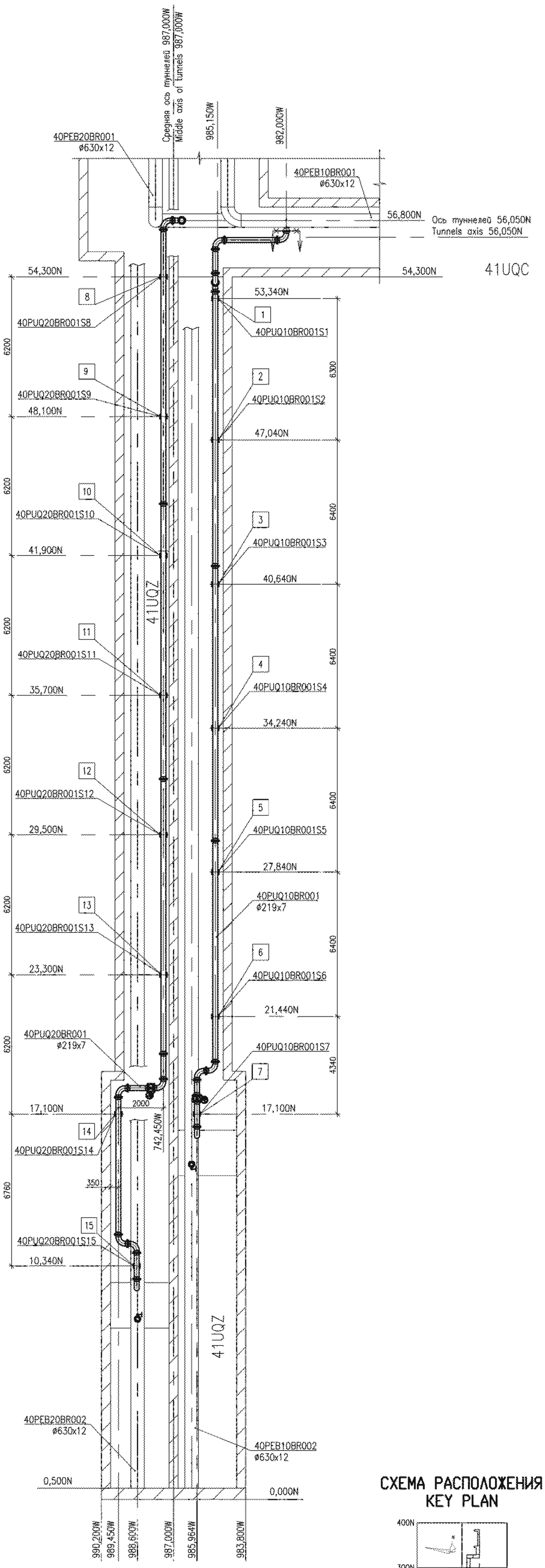

СХЕМА РАСПОЛОЖЕНИЯ
KEY PLAN

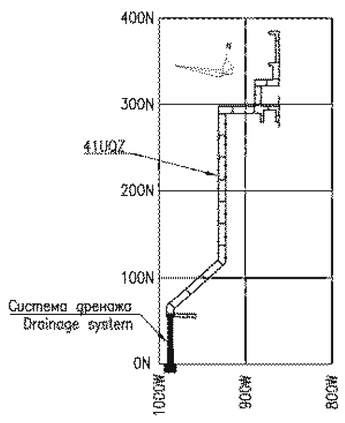

ВЕДОМОСТЬ ОПОР ТРУБОПРОВОДОВ 40PUQ10BR001, 40PUQ20BR001
LIST OF PIPELINES SUPPORTS 40PUQ10BR001, 40PUQ20BR001

Номер опоры на плане Support number on the plan	Код по системе ККС Code as per KKS	Наименование Description			Отметка Elevation	
		Технологическая опора Technological support	Кол. Q-ty	Масса ед.кг Unit weight, kg	Пол туннеля Tunnel floor	Ось трубопровода Pipeline axis
1	40PUQ10BR001S1	Скользящая опора Sliding support	1	5,91	-0,590	-0,272
2	40PUQ10BR001S2	Скользящая направляющая опора Sliding guide support	1	11,72	-0,616	-0,298
3	40PUQ10BR001S3	Скользящая направляющая опора Sliding guide support	1	11,72	-0,636	-0,318
4	40PUQ10BR001S4	Скользящая направляющая опора Sliding guide support	1	11,72	-0,662	-0,344
5	40PUQ10BR001S5	Скользящая направляющая опора Sliding guide support	1	11,72	-0,676	-0,358
6	40PUQ10BR001S6	Скользящая направляющая опора Sliding guide support	1	11,72	-0,696	-0,378
7	40PUQ10BR001S7	Неподвижная опора Fixed support	1	5,91	-0,700	-0,382
8	40PUQ20BR001S8	Скользящая опора Sliding support	1	5,91	-0,590	-0,272
9	40PUQ20BR001S9	Скользящая направляющая опора Sliding guide support	1	11,72	-0,613	-0,295
10	40PUQ20BR001S10	Скользящая направляющая опора Sliding guide support	1	11,72	-0,632	-0,314
11	40PUQ20BR001S11	Скользящая направляющая опора Sliding guide support	1	11,72	-0,651	-0,333
12	40PUQ20BR001S12	Скользящая направляющая опора Sliding guide support	1	11,72	-0,671	-0,353
13	40PUQ20BR001S13	Скользящая направляющая опора Sliding guide support	1	11,72	-0,690	-0,372
14	40PUQ20BR001S14	Скользящая направляющая опора Sliding guide support	1	11,72	-0,700	-0,382
15	40PUQ20BR001S15	Неподвижная опора Fixed support	1	5,91	-0,700	-0,382

Package Number 3 13 6 63
File: R37 KK34 41UQZ PUQ TW OK WD001_05=0

Данный чертеж не подлежит размножению или передаче другим организациям и лицам без согласия АО "Мособлгидропроект"

This drawing is not to be reproduced or transferred to other organizations or private persons without approval of Joint-stock Company "Institute HYDROPROJECT"

Изм. Rev.	N уч. N pat.	Лист Sheet	N док. Doc. No	Подпись Signature	Дата Date
Утверждл. Approved		Panov			10.18
Н. контр. Inspector		Alfimova			10.18
Разраб. Designed		Solodovnikova			10.18

R37.KK34.41UQZ.PUQ.TW.OK.WD001

АЭС "КУДАНКУЛАМ" БЛОК 4
NPP "KUDANKULAM" UNIT

41UQZ
Система дренажа сбросных вод. Дренаж воды из туннелей в случае разрыва трубопровода
41UQZ
Drain water removal system. Water removal from tunnels in case of pipeline break

Стадия Phase	Лист Sheet	Листов Sheets
WD	5	

План расстановки опор на трубопроводах 40PUQ10BR001, 40PUQ20BR001, ведомость опор трубопроводов 40PUQ10BR001, 40PUQ20BR001
Layout of supports on the pipelines 40PUQ10BR001, 40PUQ20BR001, list of pipelines supports 40PUQ10BR001, 40PUQ20BR001

Joint-stock Company "Institute HYDROPROJECT"
Dedovsk 2018

Format A1

Inv.Nr 29741 Date 22.01.19

Replace arch. Nr
Date 02.11.2018
Orig. arch. Nr. 490

ПЛАН РАЗБИВКИ ТРУБОПРОВОДОВ 40PUQ10(20)BR003, 40PUQ10(20)BR004, 40PUQ10(20)BR005, 40PUQ10(20)BR006 НА БЛОКИ
BLOCK DIVISION PLAN OF PIPELINES 40PUQ10(20)BR003, 40PUQ10(20)BR004, 40PUQ10(20)BR005, 40PUQ10(20)BR006

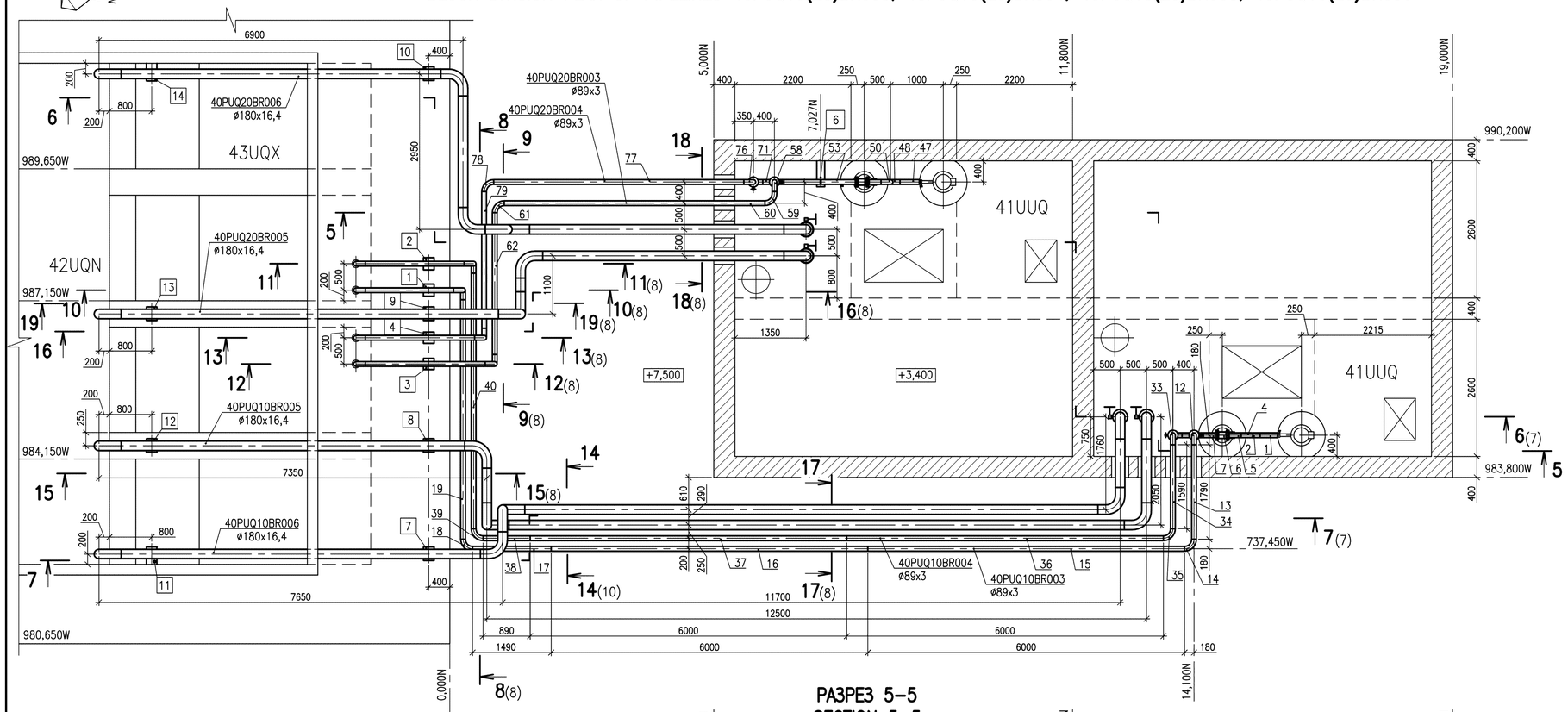

РАЗРЕЗ 5–5
SECTION 5–5

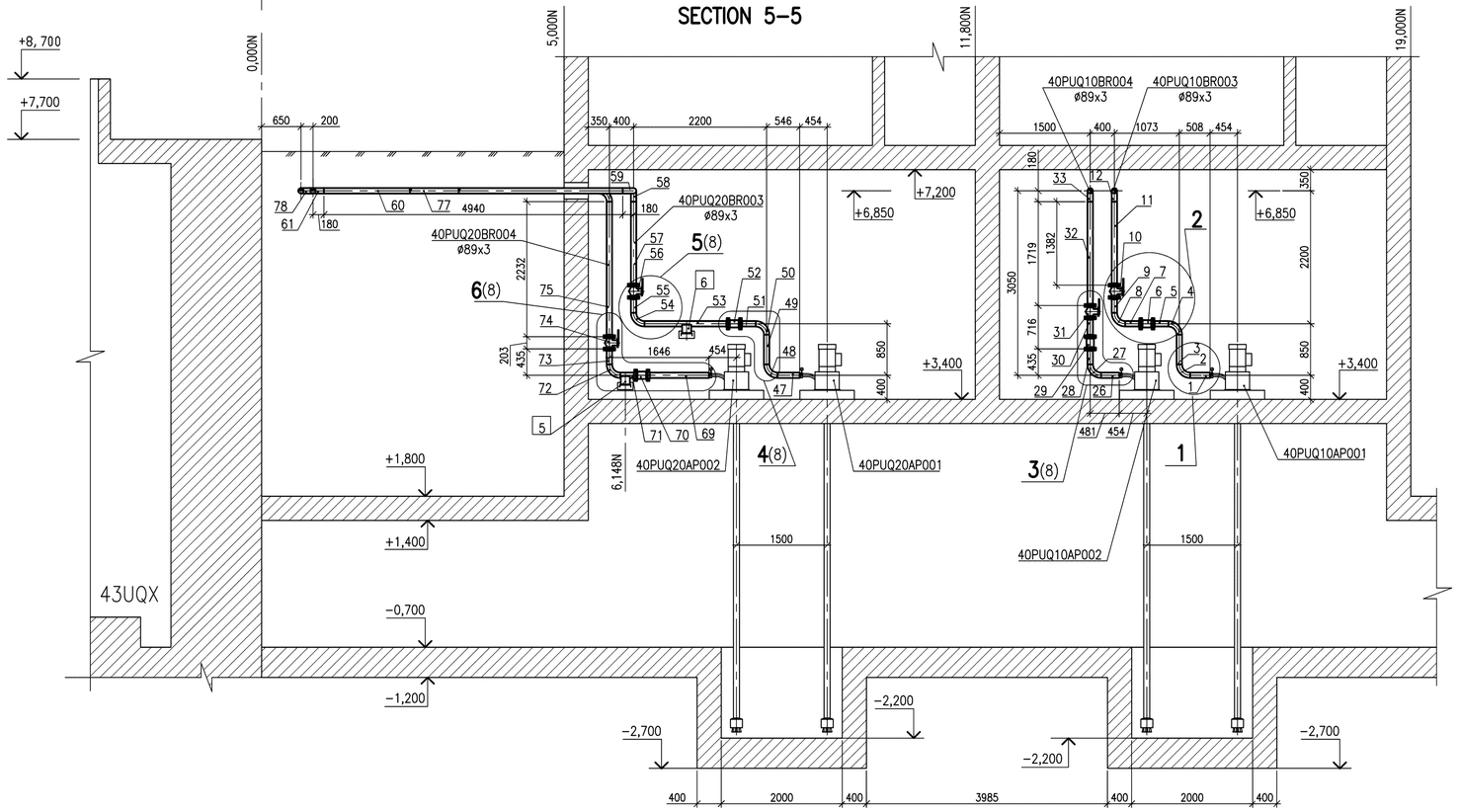

1

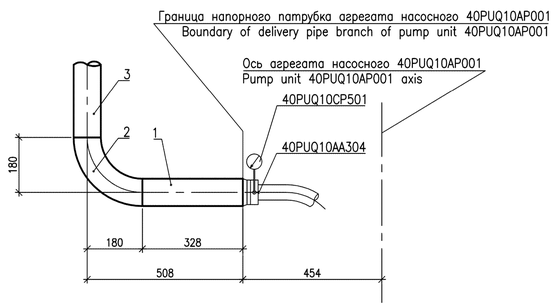

2

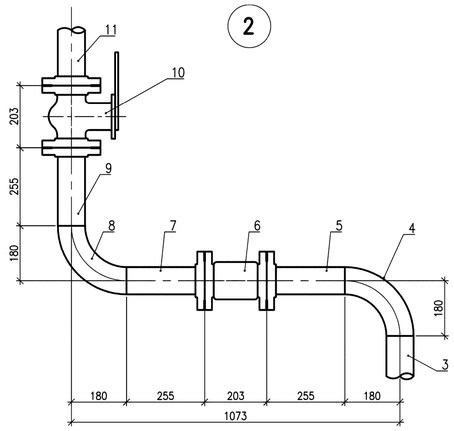

1 Спецификацию блоков трубопроводов смотри листы 9, 10, 11.
2 Ведомость опор трубопроводов смотри лист 74.

1 For pipelines blocks specification see sheets 9, 10, 11.
2 For list of pipelines supports see sheet 74.

СХЕМА РАСПОЛОЖЕНИЯ
KEY PLAN

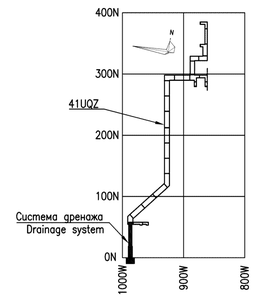

Package Number 3 13 6 63
File: R37 KK34 41UQZ PUQ TW OK WD001_06=0

Данный чертеж не подлежит размножению или передаче другим организациям и лицам без согласия АО "Мособлгидропроект"

This drawing is not to be reproduced or transferred to other organizations or private persons without approval of Joint-stock Company "Institute HYDROPROJECT"

Изм. / Rev.	N уч. / N pat.	Лист / Sheet	N док. / Doc. No	Подпись / Signature	Дата / Date
Утвердил / Approved		Panov			10.18
Н. контр. / Inspector		Alfimova			10.18
Разраб. / Designed		Solodovnikova			10.18

R37.KK34.41UQZ.PUQ.TW.OK.WD001

АЭС "КУДАНКУЛАМ" БЛОК 4
NPP "KUDANKULAM" UNIT 4

41UQZ
Система дренажа сбросных вод. Дренаж воды из туннелей в случае разрыва трубопровода
41UQZ
Drain water removal system. Water removal from tunnels in case of pipeline break

План разбивки трубопроводов 40PUQ10(20)BR003, 40PUQ10(20)BR004, 40PUQ10(20)BR005, 40PUQ10(20)BR006 на блоки, разрез 5–5, узел 1, 2
Block division plan of pipelines 40PUQ10(20)BR003, 40PUQ10(20)BR004, 40PUQ10(20)BR005, 40PUQ10(20)BR006 section 5–5, units 1, 2

Стадия / Phase	Лист / Sheet	Листов / Sheets
WD	6	

Joint-stock Company
"Institute HYDROPROJECT"
Dedovsk 2018

Format A1

Inv.Nr 29741 Date 22.01.19

Orig. arch. Nr.	Date	Replace arch. Nr.
450	22.11.2018	

РАЗРЕЗ 6–6(6)
SECTION 6–6(6)

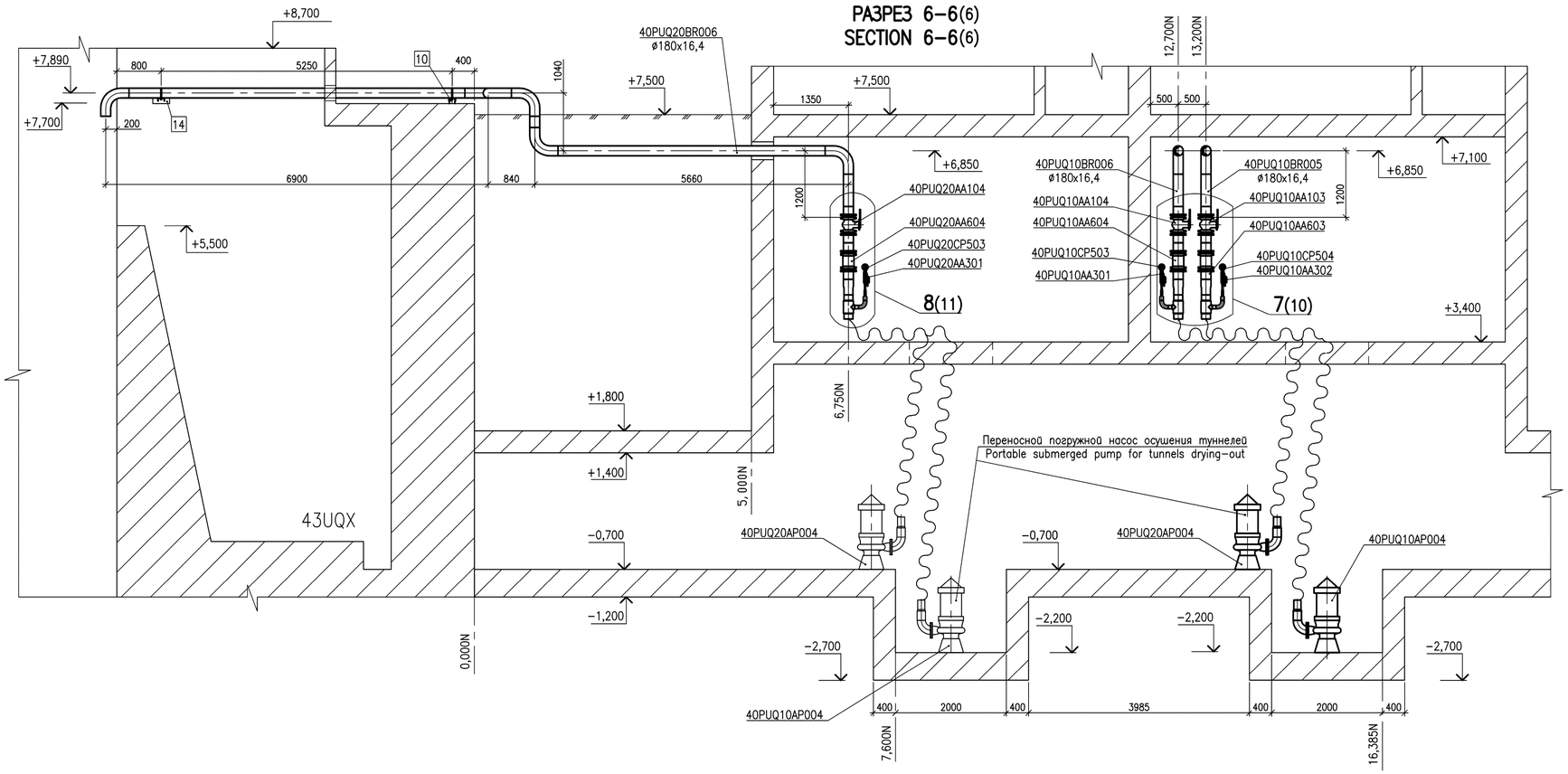

РАЗРЕЗ 7–7(6)
SECTION 7–7(6)

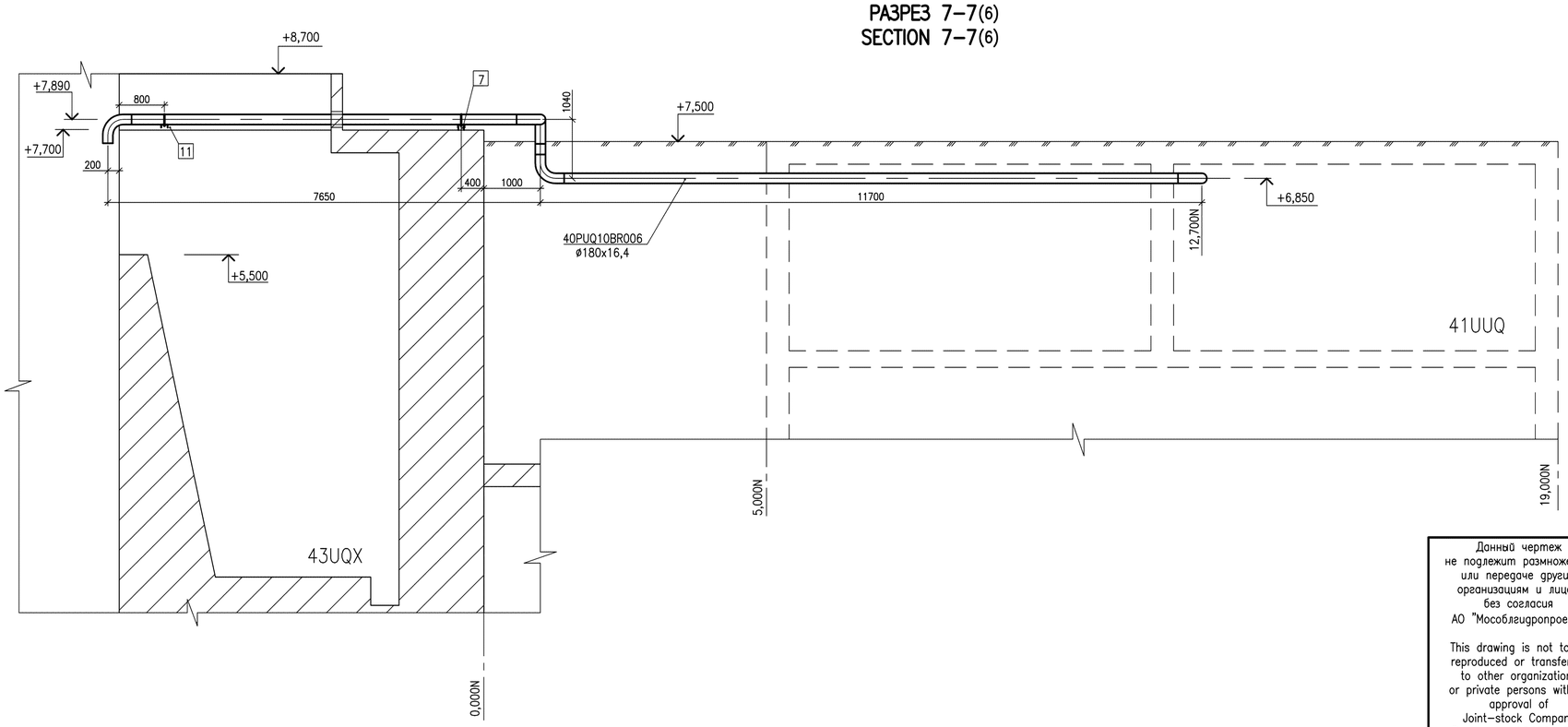

СХЕМА РАСПОЛОЖЕНИЯ
KEY PLAN

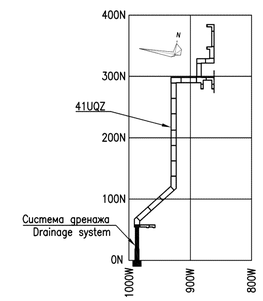

Package Number 3 13 6 63
File: R37 KK34 41UQZ PUQ TW OK WD001_07=0

Данный чертеж не подлежит размножению или передаче другим организациям и лицам без согласия АО "Мособлгидропроект"

This drawing is not to be reproduced or transferred to other organizations or private persons without approval of Joint-stock Company "Institute HYDROPROJECT"

Изм. / Rev.	N уч. / N pat.	Лист / Sheet	N док. / Doc. No	Подпись / Signature	Дата / Date
Утвердил / Approved		Panov			10.18
Н. контр. / Inspector		Alfimova			10.18
Разраб. / Designed		Solodovnikova			10.18

R37.KK34.41UQZ.PUQ.TW.OK.WD001

АЭС "КУДАНКУЛАМ" БЛОК 4
NPP "KUDANKULAM" UNIT 4

41UQZ
Система дренажа сбросных вод. Дренаж воды из туннелей в случае разрыва трубопровода
41UQZ
Drain water removal system. Water removal from tunnels in case of pipeline break

Разрезы 6–6, 7–7
Sections 6–6, 7–7

Стадия / Phase	Лист / Sheet	Листов / Sheets
WD	7	

Joint-stock Company "Institute HYDROPROJECT" Dedovsk 2018

Format A1

Inv.Nr 29741 Date 22.01.19

Replace arch. Nr	
Date	22.11.2018
Orig. arch. Nr.	450

Package Number 3 13 6 63
File: R37 KK34 41UQZ PUQ TW OK WD001_08=0

Данный чертеж не подлежит размножению или передаче другим организациям и лицам без согласия АО "Мособлгидропроект" This drawing is not to be reproduced or transferred to other organizations or private persons without approval of Joint-stock Company "Institute HYDROPROJECT"						R37.KK34.41UQZ.PUQ.TW.OK.WD001
						АЭС "КУДАНКУЛАМ" БЛОК 4 / NPP "KUDANKULAM" UNIT 4
Изм. / Rev.	N уч. / N pat.	Лист / Sheet	N док. / Doc. No	Подпись / Signature	Дата / Date	41UQZ Система дренажа сбросных вод. Дренаж воды из туннелей в случае разрыва трубопровода 41UQZ Drain water removal system. Water removal from tunnels in case of pipeline break
Утвердил / Approved		Panov			10.18	Стадия / Phase: WD; Лист / Sheet: 8; Листов / Sheets:
Н. контр. / Inspector		Alfimova			10.18	Разрезы 8–8...13–13, 15–15...19–19, узлы 3...6 Sections 8–8...13–13, 15–15...19–19, units 3...6
Разраб. / Designed		Solodovnikova			10.18	Joint-Stock Company "Institute HYDROPROJECT" Dedowsk 2018

Format A2x4

СПЕЦИФИКАЦИЯ БЛОКОВ ТРУБОПРОВОДОВ 40PUQ10BR003, 40PUQ10BR004, 40PUQ20BR003, 40PUQ20BR004
SPECIFICATION OF PIPELINES BLOCKS 40PUQ10BR003, 40PUQ10BR004, 40PUQ20BR003, 40PUQ20BR004

Поз. Pos.	Обозначение Designation	Наименование Name of Block	Кол. Quant	Масса ед., Unit weight, kg	Примечание Note
70	ASME B16.34–2009	Затвор обратный 80 NB; Класс 150 Check valve 80 NB; Class 150 40PUQ20AA602	1	–	
71	R37.KK.41UQZ.PUQ.TW.OK.WD001 лист 66 Sheet 66	Блок 40PUQ20BR004MR071 Block 40PUQ20BR004MR071	1	3,1	
72	R37.KK.41UQZ.PUQ.TW.OK.WD001 лист 67 Sheet 67	Блок 40PUQ20BR004MR072 Block 40PUQ20BR004MR072	1	1,4	
73	R37.KK.41UQZ.PUQ.TW.OK.WD001 лист 66 Sheet 66	Блок 40PUQ20BR004MR073 Block 40PUQ20BR004MR073	1	3,1	
74	ASME B16.34–2009	Двустворчатый клапан 80 NB; Класс 150 Butterfly valve 80 NB; Class 150 40PUQ20AA102	1	–	
75	R37.KK.41UQZ.PUQ.TW.OK.WD001 лист 68 Sheet 68	Блок 40PUQ20BR004MR075 Block 40PUQ20BR004MR075	1	10,3	
76	R37.KK.41UQZ.PUQ.TW.OK.WD001 лист 67 Sheet 67	Блок 40PUQ20BR004MR076 Block 40PUQ20BR004MR076	1	1,4	
77	R37.KK.41UQZ.PUQ.TW.OK.WD001 лист 69 Sheet 69	Блок 40PUQ20BR004MR077 Block 40PUQ20BR004MR077	1	17,3	
78	R37.KK.41UQZ.PUQ.TW.OK.WD001 лист 67 Sheet 67	Блок 40PUQ20BR004MR078 Block 40PUQ20BR004MR078	1	1,4	
79	R37.KK.41UQZ.PUQ.TW.OK.WD001 лист 70 Sheet 70	Блок 40PUQ20BR004MR079 Block 40PUQ20BR004MR079	1	9,5	
80	R37.KK.41UQZ.PUQ.TW.OK.WD001 лист 67 Sheet 67	Блок 40PUQ20BR004MR080 Block 40PUQ20BR004MR080	1	1,4	
81	R37.KK.41UQZ.PUQ.TW.OK.WD001 лист 71 Sheet 71	Блок 40PUQ20BR004MR081 Block 40PUQ20BR004MR081	1	2,4	
82	R37.KK.41UQZ.PUQ.TW.OK.WD001 лист 67 Sheet 67	Блок 40PUQ20BR004MR082 Block 40PUQ20BR004MR082	1	1,4	
83	R37.KK.41UQZ.PUQ.TW.OK.WD001 лист 72 Sheet 72	Блок 40PUQ20BR004MR083 Block 40PUQ20BR004MR083	1	7,3	
84	R37.KK.41UQZ.PUQ.TW.OK.WD001 лист 67 Sheet 67	Блок 40PUQ20BR004MR084 Block 40PUQ20BR004MR084	1	1,4	
85	R37.KK.41UQZ.PUQ.TW.OK.WD001 лист 73 Sheet 73	Блок 40PUQ20BR004MR085 Block 40PUQ20BR004MR085	1	2,1	

Поз. Pos.	Обозначение Designation	Наименование Name of Block	Кол. Quant	Масса ед., Unit weight, kg	Примечание Note
47	R37.KK.41UQZ.PUQ.TW.OK.WD001 лист 54 Sheet 54	Блок 40PUQ20BR003MR047 Block 40PUQ20BR003MR047	1	1,7	
48	R37.KK.41UQZ.PUQ.TW.OK.WD001 лист 55 Sheet 55	Блок 40PUQ20BR003MR048 Block 40PUQ20BR003MR048	1	1,4	
49	R37.KK.41UQZ.PUQ.TW.OK.WD001 лист 56 Sheet 56	Блок 40PUQ20BR003MR049 Block 40PUQ20BR003MR049	1	1,8	
50	R37.KK.41UQZ.PUQ.TW.OK.WD001 лист 55 Sheet 55	Блок 40PUQ20BR003MR050 Block 40PUQ20BR003MR050	1	1,4	
51	R37.KK.41UQZ.PUQ.TW.OK.WD001 лист 57 Sheet 57	Блок 40PUQ20BR003MR051 Block 40PUQ20BR003MR051	1	3,1	
52	ASME B16.34–2009	Затвор обратный 80 NB; Класс 150 Check valve 80 NB; Class 150 40PUQ20AA601	1	–	
53	R37.KK.41UQZ.PUQ.TW.OK.WD001 лист 58 Sheet 58	Блок 40PUQ20BR003MR053 Block 40PUQ20BR003MR053	1	7,3	
54	R37.KK.41UQZ.PUQ.TW.OK.WD001 лист 55 Sheet 55	Блок 40PUQ20BR003MR054 Block 40PUQ20BR003MR054	1	1,4	
55	R37.KK.41UQZ.PUQ.TW.OK.WD001 лист 57 Sheet 57	Блок 40PUQ20BR003MR055 Block 40PUQ20BR003MR055	1	3,1	
56	ASME B16.34–2009	Двустворчатый клапан 80 NB; Класс 150 Butterfly valve 80 NB; Class 150 40PUQ20AA101	1	–	
57	R37.KK.41UQZ.PUQ.TW.OK.WD001 лист 58 Sheet 58	Блок 40PUQ20BR003MR057 Block 40PUQ20BR003MR057	1	7,3	
58	R37.KK.41UQZ.PUQ.TW.OK.WD001 лист 55 Sheet 55	Блок 40PUQ20BR003MR058 Block 40PUQ20BR003MR058	1	1,4	
59	R37.KK.41UQZ.PUQ.TW.OK.WD001 лист 59 Sheet 59	Блок 40PUQ20BR003MR059 Block 40PUQ20BR003MR059	1	1,5	
60	R37.KK.41UQZ.PUQ.TW.OK.WD001 лист 60 Sheet 60	Блок 40PUQ20BR003MR060 Block 40PUQ20BR003MR060	1	18,0	
61	R37.KK.41UQZ.PUQ.TW.OK.WD001 лист 55 Sheet 55	Блок 40PUQ20BR003MR061 Block 40PUQ20BR003MR061	1	1,4	
62	R37.KK.41UQZ.PUQ.TW.OK.WD001 лист 61 Sheet 61	Блок 40PUQ20BR003MR062 Block 40PUQ20BR003MR062	1	9,8	
63	R37.KK.41UQZ.PUQ.TW.OK.WD001 лист 55 Sheet 55	Блок 40PUQ20BR003MR063 Block 40PUQ20BR003MR063	1	1,4	
64	R37.KK.41UQZ.PUQ.TW.OK.WD001 лист 62 Sheet 62	Блок 40PUQ20BR003MR064 Block 40PUQ20BR003MR064	1	2,4	
65	R37.KK.41UQZ.PUQ.TW.OK.WD001 лист 55 Sheet 55	Блок 40PUQ20BR003MR065 Block 40PUQ20BR003MR065	1	1,4	
66	R37.KK.41UQZ.PUQ.TW.OK.WD001 лист 63 Sheet 63	Блок 40PUQ20BR003MR066 Block 40PUQ20BR003MR066	1	8,0	
67	R37.KK.41UQZ.PUQ.TW.OK.WD001 лист 55 Sheet 55	Блок 40PUQ20BR003MR067 Block 40PUQ20BR003MR067	1	1,4	
68	R37.KK.41UQZ.PUQ.TW.OK.WD001 лист 64 Sheet 64	Блок 40PUQ20BR003MR068 Block 40PUQ20BR003MR068	1	2,1	
69	R37.KK.41UQZ.PUQ.TW.OK.WD001 лист 65 Sheet 65	Блок 40PUQ20BR004MR069 Block 40PUQ20BR004MR069	1	3,7	

Поз. Pos.	Обозначение Designation	Наименование Name of Block	Кол. Quant	Масса ед., Unit weight, kg	Примечание Note
24	R37.KK.41UQZ.PUQ.TW.OK.WD001 лист 31 Sheet 31	Блок 40PUQ10BR003MR024 Block 40PUQ10BR003MR024	1	1,4	
25	R37.KK.41UQZ.PUQ.TW.OK.WD001 лист 41 Sheet 41	Блок 40PUQ10BR003MR025 Block 40PUQ10BR003MR025	1	2,1	
26	R37.KK.41UQZ.PUQ.TW.OK.WD001 лист 42 Sheet 42	Блок 40PUQ10BR004MR026 Block 40PUQ10BR004MR026	1	1,5	
27	R37.KK.41UQZ.PUQ.TW.OK.WD001 лист 43 Sheet 43	Блок 40PUQ10BR004MR027 Block 40PUQ10BR004MR027	1	1,4	
28	R37.KK.41UQZ.PUQ.TW.OK.WD001 лист 44 Sheet 44	Блок 40PUQ10BR004MR028 Block 40PUQ10BR004MR028	1	3,1	
29	ASME B16.34–2009	Затвор обратный 80 BN; Класс 150 Check valve 80 BN; Class 150 40PUQ10AA602	1	–	
30	R37.KK.41UQZ.PUQ.TW.OK.WD001 лист 45 Sheet 45	Блок 40PUQ10BR004MR030 Block 40PUQ10BR004MR030	1	5,5	
31	ASME B16.34–2009	Двустворчатый клапан 80 NB; Класс 150 Butterfly valve 80 NB; Class 150 40PUQ10AA102	1	–	
32	R37.KK.41UQZ.PUQ.TW.OK.WD001 лист 46 Sheet 46	Блок 40PUQ10BR004MR032 Block 40PUQ10BR004MR032	1	8,5	
33	R37.KK.41UQZ.PUQ.TW.OK.WD001 лист 43 Sheet 43	Блок 40PUQ10BR004MR033 Block 40PUQ10BR004MR033	1	1,4	
34	R37.KK.41UQZ.PUQ.TW.OK.WD001 лист 47 Sheet 47	Блок 40PUQ10BR004MR034 Block 40PUQ10BR004MR034	1	5,8	
35	R37.KK.41UQZ.PUQ.TW.OK.WD001 лист 43 Sheet 43	Блок 40PUQ10BR004MR035 Block 40PUQ10BR004MR035	1	1,4	
36	R37.KK.41UQZ.PUQ.TW.OK.WD001 лист 48 Sheet 48	Блок 40PUQ10BR004MR036 Block 40PUQ10BR004MR036	1	21,9	
37	R37.KK.41UQZ.PUQ.TW.OK.WD001 лист 48 Sheet 48	Блок 40PUQ10BR004MR037 Block 40PUQ10BR004MR037	1	21,9	
38	R37.KK.41UQZ.PUQ.TW.OK.WD001 лист 49 Sheet 49	Блок 40PUQ10BR004MR038 Block 40PUQ10BR004MR038	1	3,3	
39	R37.KK.41UQZ.PUQ.TW.OK.WD001 лист 43 Sheet 43	Блок 40PUQ10BR004MR039 Block 40PUQ10BR004MR039	1	1,4	
40	R37.KK.41UQZ.PUQ.TW.OK.WD001 лист 50 Sheet 50	Блок 40PUQ10BR004MR040 Block 40PUQ10BR004MR040	1	17,7	
41	R37.KK.41UQZ.PUQ.TW.OK.WD001 лист 43 Sheet 43	Блок 40PUQ10BR004MR041 Block 40PUQ10BR004MR041	1	1,4	
42	R37.KK.41UQZ.PUQ.TW.OK.WD001 лист 51 Sheet 51	Блок 40PUQ10BR004MR042 Block 40PUQ10BR004MR042	1	2,4	
43	R37.KK.41UQZ.PUQ.TW.OK.WD001 лист 43 Sheet 43	Блок 40PUQ10BR004MR043 Block 40PUQ10BR004MR043	1	1,4	
44	R37.KK.41UQZ.PUQ.TW.OK.WD001 лист 52 Sheet 52	Блок 40PUQ10BR004MR044 Block 40PUQ10BR004MR044	1	6,5	
45	R37.KK.41UQZ.PUQ.TW.OK.WD001 лист 43 Sheet 43	Блок 40PUQ10BR004MR045 Block 40PUQ10BR004MR045	1	1,4	
46	R37.KK.41UQZ.PUQ.TW.OK.WD001 лист 53 Sheet 53	Блок 40PUQ10BR004MR046 Block 40PUQ10BR004MR046	1	2,1	

Поз. Pos.	Обозначение Designation	Наименование Name of Block	Кол. Quant	Масса ед., Unit weight, kg	Примечание Note
1	R37.KK.41UQZ.PUQ.TW.OK.WD001 лист 30 Sheet 30	Блок 40PUQ10BR003MR001 Block 40PUQ10BR003MR001	1	1,6	
2	R37.KK.41UQZ.PUQ.TW.OK.WD001 лист 31 Sheet 31	Блок 40PUQ10BR003MR002 Block 40PUQ10BR003MR002	1	1,4	
3	R37.KK.41UQZ.PUQ.TW.OK.WD001 лист 32 Sheet 32	Блок 40PUQ10BR003MR003 Block 40PUQ10BR003MR003	1	1,8	
4	R37.KK.41UQZ.PUQ.TW.OK.WD001 лист 31 Sheet 31	Блок 40PUQ10BR003MR004 Block 40PUQ10BR003MR004	1	1,4	
5	R37.KK.41UQZ.PUQ.TW.OK.WD001 лист 33 Sheet 33	Блок 40PUQ10BR003MR005 Block 40PUQ10BR003MR005	1	3,1	
6	ASME B16.34–2009	Затвор обратный 80 NB; Класс 150 Check valve 80 NB; Class 150 40PUQ10AA601	1	–	
7	R37.KK.41UQZ.PUQ.TW.OK.WD001 лист 33 Sheet 33	Блок 40PUQ10BR003MR007 Block 40PUQ10BR003MR007	1	3,1	
8	R37.KK.41UQZ.PUQ.TW.OK.WD001 лист 31 Sheet 31	Блок 40PUQ10BR003MR008 Block 40PUQ10BR003MR008	1	1,4	
9	R37.KK.41UQZ.PUQ.TW.OK.WD001 лист 33 Sheet 33	Блок 40PUQ10BR003MR009 Block 40PUQ10BR003MR009	1	3,1	
10	ASME B16.34–2009	Двустворчатый клапан 80 NB; Класс 150 Butterfly valve 80 NB; Class 150 40PUQ10AA101	1	–	
11	R37.KK.41UQZ.PUQ.TW.OK.WD001 лист 34 Sheet 34	Блок 40PUQ10BR003MR011 Block 40PUQ10BR003MR011	1	7,2	
12	R37.KK.41UQZ.PUQ.TW.OK.WD001 лист 31 Sheet 31	Блок 40PUQ10BR003MR012 Block 40PUQ10BR003MR012	1	1,4	
13	R37.KK.41UQZ.PUQ.TW.OK.WD001 лист 35 Sheet 35	Блок 40PUQ10BR003MR013 Block 40PUQ10BR003MR013	1	6,5	
14	R37.KK.41UQZ.PUQ.TW.OK.WD001 лист 31 Sheet 31	Блок 40PUQ10BR003MR014 Block 40PUQ10BR003MR014	1	1,4	
15	R37.KK.41UQZ.PUQ.TW.OK.WD001 лист 36 Sheet 36	Блок 40PUQ10BR003MR015 Block 40PUQ10BR003MR015	1	21,6	
16	R37.KK.41UQZ.PUQ.TW.OK.WD001 лист 36 Sheet 36	Блок 40PUQ10BR003MR016 Block 40PUQ10BR003MR016	1	21,6	
17	R37.KK.41UQZ.PUQ.TW.OK.WD001 лист 37 Sheet 37	Блок 40PUQ10BR003MR017 Block 40PUQ10BR003MR017	1	5,4	
18	R37.KK.41UQZ.PUQ.TW.OK.WD001 лист 31 Sheet 31	Блок 40PUQ10BR003MR018 Block 40PUQ10BR003MR018	1	1,4	
19	R37.KK.41UQZ.PUQ.TW.OK.WD001 лист 38 Sheet 38	Блок 40PUQ10BR003MR019 Block 40PUQ10BR003MR019	1	16,6	
20	R37.KK.41UQZ.PUQ.TW.OK.WD001 лист 31 Sheet 31	Блок 40PUQ10BR003MR020 Block 40PUQ10BR003MR020	1	1,4	
21	R37.KK.41UQZ.PUQ.TW.OK.WD001 лист 39 Sheet 39	Блок 40PUQ10BR003MR021 Block 40PUQ10BR003MR021	1	2,4	
22	R37.KK.41UQZ.PUQ.TW.OK.WD001 лист 31 Sheet 31	Блок 40PUQ10BR003MR022 Block 40PUQ10BR003MR022	1	1,4	
23	R37.KK.41UQZ.PUQ.TW.OK.WD001 лист 40 Sheet 40	Блок 40PUQ10BR003MR023 Block 40PUQ10BR003MR023	1	5,8	

Номера позиций данной спецификации соответствуют номерам блоков на листах 6, 7, 8.

Position numbers of this specification correspond with blocks numbers on Sheet 6, 7, 8.

Package Number 3 13 6 63
File: R37 KK34 41UQZ PUQ TW OK WD001_09=0

Данный чертеж не подлежит размножению или передаче другим организациям и лицам без согласия АО "Мособлгидропроект"

This drawing is not to be reproduced or transferred to other organizations or private persons without approval of Joint-stock Company "Institute HYDROPROJECT"

R37.KK34.41UQZ.PUQ.TW.OK.WD001

АЭС "КУДАНКУЛАМ" БЛОК 4
NPP "KUDANKULAM" UNIT 4

41UQZ Система дренажа сбросных вод. Дренаж воды из туннелей в случае разрыва трубопровода
41UQZ Drain water removal system. Water removal from tunnels in case of pipeline break

Спецификация блоков трубопроводов 40PUQ10BR003, 40PUQ10BR004, 40PUQ20BR003, 40PUQ20BR004
Specification of pipelines blocks 0PUQ10BR003, 40PUQ10BR004, 40PUQ20BR003, 40PUQ20BR004

Изм. Rev.	N уч. N pat.	Лист Sheet	N док. Doc. No	Подпись Signature	Дата Date
Утвердил Approved		Panov			10.18
Н. контр. Inspector		Alfimova			10.18
Разраб. Designed		Solodovnikova			10.18

Стадия Phase	Лист Sheet	Листов Sheets
WD	9	

Joint-stock Company "Institute HYDROPROJECT" Dedovsk 2018

Format A1

Inv.Nr 29741 Date 22.01.19

Orig. arch. Nr.	Date	Replace arch. Nr
4450	02.11.2018	

ПРИНЦИПИАЛЬНАЯ СХЕМА ТРУБОПРОВОДОВ 40PUQ10BR005, BR006
SCHEMATIC DIAGRAM OF PIPELINES 40PUQ10BR005, BR006

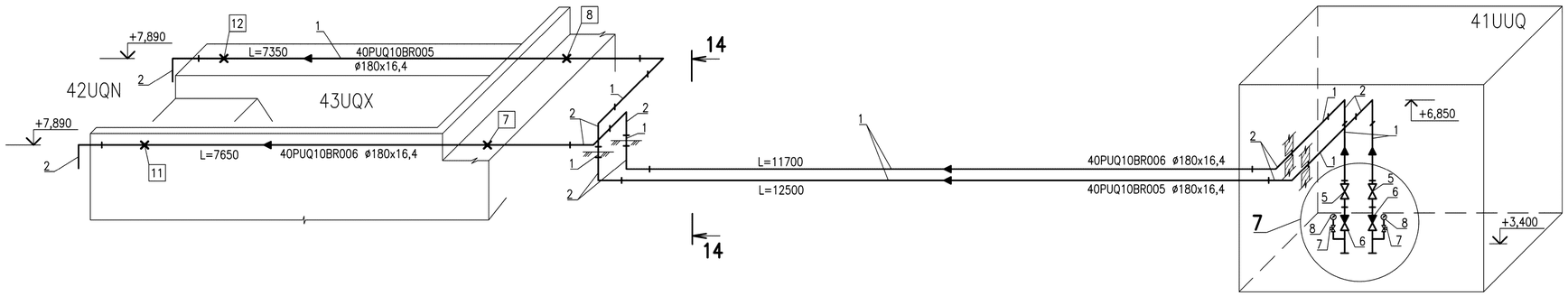

СПЕЦИФИКАЦИЯ ТРУБОПРОВОДОВ 40PUQ10BR005, BR006
SPECIFICATION OF PIPELINES 40PUQ10BR005, BR006

Поз. Pos	Обозначение Designation	Наименование Name of Block	Кол. Q-ty	Масса ед., кг Unit weight, kg	Примечание Note
1	ISO 4427-1:2007	Труба 180x16,4 ПЭ100 SDR11 Pipe 180x16,4 PE100 SDR11	48	8,4	метры metres
2	ISO 4427-3:2007	Отвод 90° d180 PE100 SDR11 Pipe-bend 90° d180 PE100 SDR11	12	4,4	шт. pcs.
3		Фланцевой адаптер d180 PE100 SDR11 Flanges adaptor d180 PE100 SDR11	8	–	шт. pcs.
4		Фланец стальной для фланцевого адаптера d180 PE100 SDR11 Flanges steel for flanges adapter d180 PE100 SDR11	8	–	шт. pcs.
5	40PUQ10AA103 40PUQ10AA104	Двустворчатый клапан 150NB Class150 ASME B16.34-2004 Butterfly valve 150NB Class150 ASME B16.34-2004	2	–	шт. pcs.
6	40PUQ10AA603 40PUQ10AA604	Поворотный обратный клапан 150NB Class150 ASME B16.34-2004 Swing check valve 150NB Class150 ASME B16.34-2004	2	–	шт. pcs.
7	40PUQ10AA301 40PUQ10AA302	Игольчатый вентиль 10NB Class150 ASME B16.34-2004 Needle valve 10NB Class150 ASME B16.34-2004	2	–	шт. pcs.
8	40PUQ10AA503 40PUQ10AA506	Мановакуумметр показывающий Combined pressure-and-vacuum gauge indicating	2	–	шт. pcs.
9		Переход редукционный d180xd160 ПЭ100 SDR11 Reducer long d180xd160 PE100 SDR11	2	–	шт. pcs.
10	ISO 4427-3:2007	Тройник 90° d160xd63 ПЭ100 SDR11 Tee 90° d160xd63 PE100 SDR11	2	–	шт. pcs.
11	ISO 4427-3:2007	Отвод 90° d63 ПЭ100 SDR11 Pipe-bend 90° d63 PE100 SDR11	2	–	шт. pcs.
12		Переход редукционный d63xd32 ПЭ100 SDR11 Reducer long d63xd32 PE100 SDR11	2	–	шт. pcs.
13		Переход редукционный d32xd20 ПЭ100 SDR11 Reducer long d32xd20 PE100 SDR11	2	–	шт. pcs.
14		Переход 20-G1/2 ПЭ-сталь с наружной резьбой Transition long 20-G1/2 male-thread-con	2	–	шт. pcs.

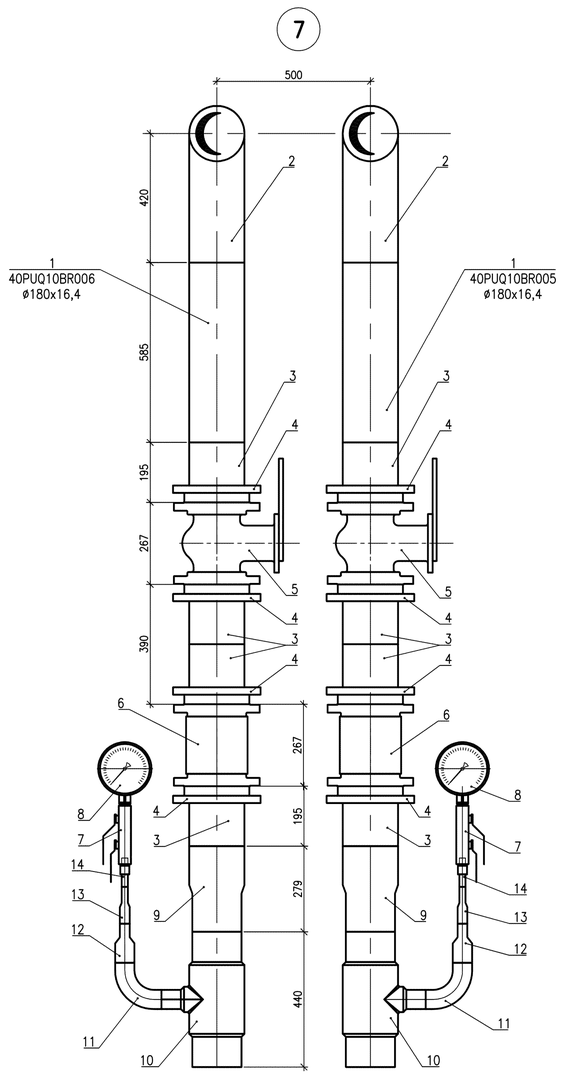

РАЗРЕЗ 14-14 (6)
SECTION 14-14 (6)

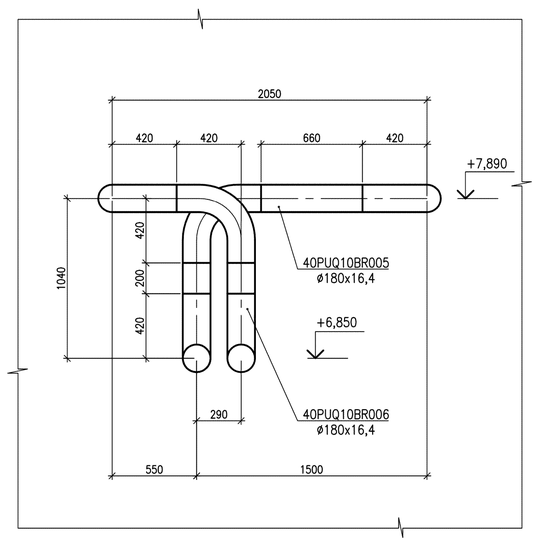

СХЕМА РАСПОЛОЖЕНИЯ
KEY PLAN

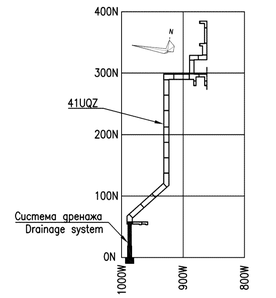

Package Number 3 13 6 63
File: R37 KK34 41UQZ PUQ TW OK WD001_10=0

Данный чертеж не подлежит размножению или передаче другим организациям и лицам без согласия АО "Мособлгидропроект"

This drawing is not to be reproduced or transferred to other organizations or private persons without approval of Joint-stock Company "Institute HYDROPROJECT"

Изм. Rev.	N уч. N pat.	Лист Sheet	N док. Doc-No	Подпись Signature	Дата Date
Утвердил Approved		Panov			10.18
Н. контр. Inspector		Alfimova			10.18
Разраб. Designed		Solodovnikova			10.18

R37.KK34.41UQZ.PUQ.TW.OK.WD001

АЭС "КУДАНКУЛАМ" БЛОК 4
NPP "KUDANKULAM" UNIT 4

41UQZ
Система дренажа сбросных вод. Дренаж воды из туннелей в случае разрыва трубопровода
41UQZ
Drain water removal system. Water removal from tunnels in case of pipeline break

Принципиальная схема трубопроводов 40PUQ10BR005 BR006, разрез 14-14, узел 7, спецификация трубопроводов 40PUQ10BR005, BR006
Schematik diagram of pipelines 40PUQ10BR005, BR006, section 14-14, unit 7, specification of pipelines 40PUQ10BR005, BR006

Стадия Phase	Лист Sheet	Листов Sheets
WD	10	

Joint-stock Company "Institute HYDROPROJECT" Dedovsk 2018

Format A1

Inv.Nr 29741 Date 22.01.19

Replace arch. Nr	
Date	22.11.2018
Orig. arch. Nr.	450

ПРИНЦИПИАЛЬНАЯ СХЕМА ТРУБОПРОВОДОВ 40PUQ20BR005, BR006
SCHEMATIC DIAGRAM OF PIPELINES 40PUQ20BR005, BR006

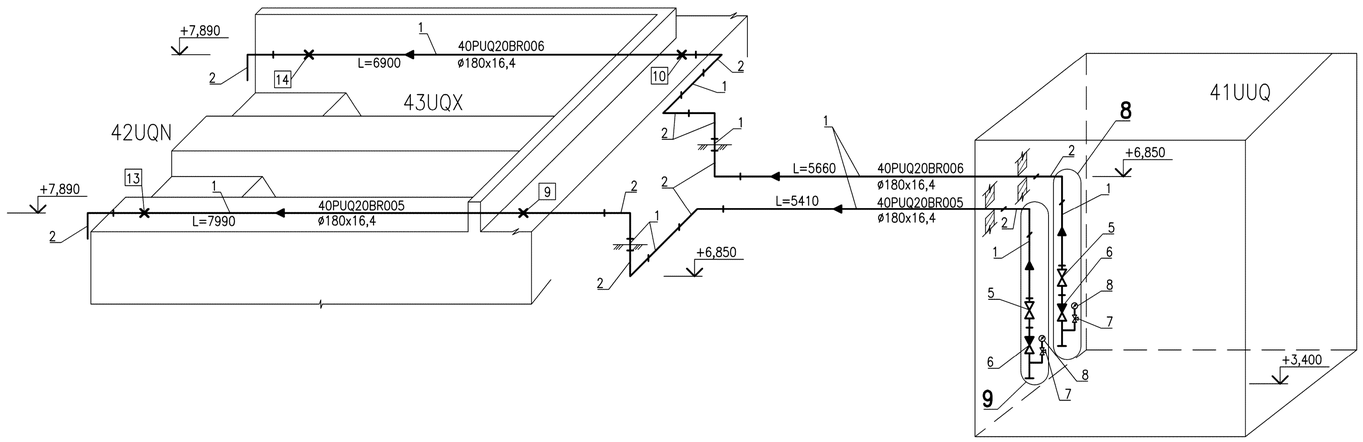

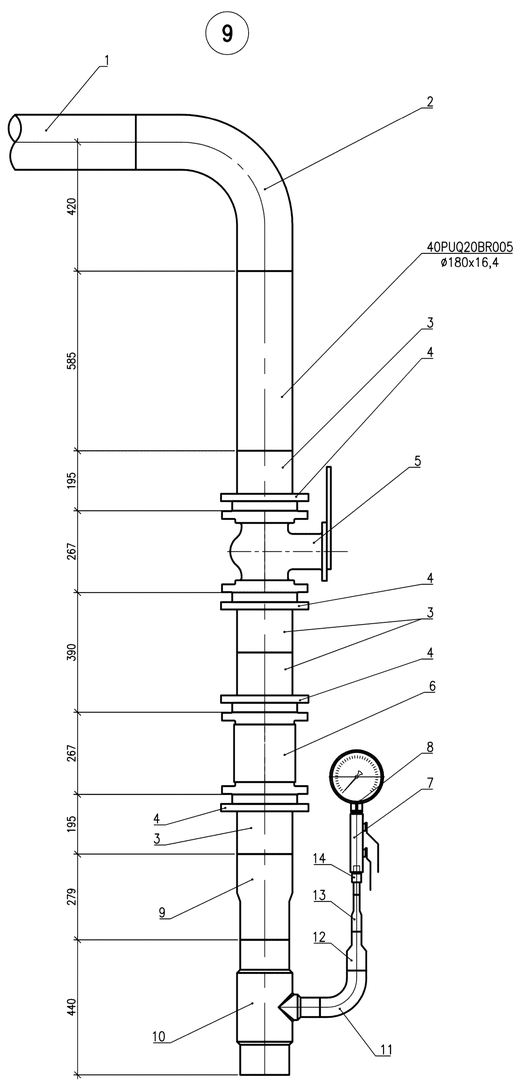

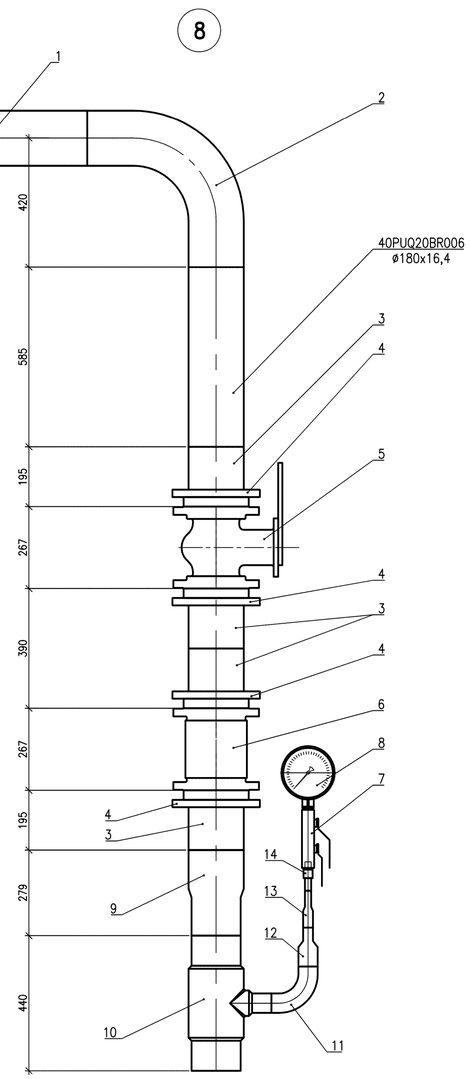

СПЕЦИФИКАЦИЯ ТРУБОПРОВОДОВ 40PUQ20BR005, BR006
SPECIFICATION OF PIPELINES 40PUQ20BR005, BR006

Поз. Pos	Обозначение Designation	Наименование Name of Block	Кол. Q-ty	Масса ед., кг Unit weight, kg	Примечание Note
1	ISO 4427-1:2007	Труба 180x16,4 ПЭ100 SDR11 Pipe 180x16,4 PE100 SDR11	35	8,4	метры metres
2	ISO 4427-3:2007	Отвод 90° d180 ПЭ100 SDR11 Pipe-bend 90° d180 PE100 SDR11	11	4,4	шт. pcs.
3		Фланцевый адаптер d180 PE100 SDR11 Flanges adaptor d180 PE100 SDR11	8	–	шт. pcs.
4		Фланец стальной для фланцевого адаптера d180 PE100 SDR11 Flanges steel for flanges adapter d180 PE100 SDR11	8	–	шт. pcs.
5	40PUQ20AA103 40PUQ20AA104	Двухстворчатый клапан 150NB Class150 ASME B16.34-2004 Butterfly valve 150NB Class150 ASME B16.34-2004	2	–	шт. pcs.
6	40PUQ20AA603 40PUQ20AA604	Поворотный обратный клапан 150NB Class150 ASME B16.34-2004 Swing check valve 150NB Class150 ASME B16.34-2004	2	–	шт. pcs.
7	40PUQ20AA301 40PUQ20AA302	Игольчатый вентиль 10NB Class150 ASME B16.34-2004 Needle valve 10NB Class150 ASME B16.34-2004	2	–	шт. pcs.
8	40PUQ20AA503 40PUQ20AA506	Мановакуумметр показывающий Combined pressure-and-vacuum gauge indicating	2	–	шт. pcs.
9		Переход редукционный d180xd160 ПЭ100 SDR11 Reducer long d180xd160 PE100 SDR11	2	–	шт. pcs.
10	ISO 4427-3:2007	Тройник 90° d160xd63 ПЭ100 SDR11 Tee 90° d160xd63 PE100 SDR11	2	–	шт. pcs.
11	ISO 4427-3:2007	Отвод 90° d63 ПЭ100 SDR11 Pipe-bend 90° d63 PE100 SDR11	2	–	шт. pcs.
12		Переход редукционный d63xd32 ПЭ100 SDR11 Reducer long d63xd32 PE100 SDR11	2	–	шт. pcs.
13		Переход редукционный d32xd20 ПЭ100 SDR11 Reducer long d32xd20 PE100 SDR11	2	–	шт. pcs.
14		Переход 20-G1/2 ПЭ-сталь с наружной резьбой Transition long 20-G1/2 male-thread-con	2	–	шт. pcs.

СХЕМА РАСПОЛОЖЕНИЯ
KEY PLAN

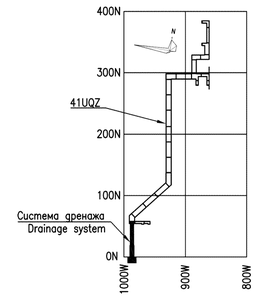

Package Number 3 13 6 63
File: R37 KK34 41UQZ PUQ TW OK WD001_11=0

Данный чертеж не подлежит размножению или передаче другим организациям и лицам без согласия АО "Мособлгидропроект"

This drawing is not to be reproduced or transferred to other organizations or private persons without approval of Joint-stock Company "Institute HYDROPROJECT"

Изм. Rev.	N уч. N pat.	Лист Sheet	N док. Doc. No	Подпись Signature	Дата Date
Утверди л Approved		Panov			10.18
Н. контр. Inspector		Alfimova			10.18
Разраб. Designed		Solodovnikova			10.18

R37.KK34.41UQZ.PUQ.TW.OK.WD001

АЭС "КУДАНКУЛАМ" БЛОК 4
NPP "KUDANKULAM" UNIT 4

41UQZ
Система дренажа сбросных вод. Дренаж воды из туннелей в случае разрыва трубопровода
41UQZ
Drain water removal system. Water removal from tunnels in case of pipeline break

Принципиальная схема трубопроводов 40PUQ20BR005, BR006, узлы 8, 9, спецификация трубопроводов 40PUQ20BR005, BR006
Schematik diagram of pipelines 40PUQ20BR005, BR006, units 8, 9, specification of pipelines 40PUQ20BR005, BR006

Стадия Phase	Лист Sheet	Листов Sheets
WD	11	

Joint-stock Company "Institute HYDROPROJECT" Dedovsk 2018

Format A1

Inv.Nr 29741 Date 22.01.19

Replace arch. №	Date	Orig. arch. Nr.
	22.11.2018	450

ВЕДОМОСТЬ РАБОЧИХ ЧЕРТЕЖЕЙ ОСНОВНОГО КОМПЛЕКТА
LIST OF THE WORKING DRAWINGS OF MAIN SET

Лист Sheet	Наименование Description	Примечание Note
1	Общие данные General data	
2	Схема принципиальная Schematic diagram	
3	План разбивки трубопроводов 40PUQ30BR001, 40PUQ30BR002, 40PUQ40BR001, 40PUQ40BR002 на блоки, разрезы 1–1...4–4 Block division plan of pipelines 40PUQ30BR001, 40PUQ30BR002, 40PUQ40BR001, 40PUQ40BR002, section 1–1...4–4	
4	План расстановки опор на трубопроводах 40PUQ30(40)BR001, спецификация блоков трубопроводов 40PUQ30(40)BR001, 40PUQ30(40)BR002 Layout of supports on the pipelines 40PUQ30(40)BR001, blocks specification of pipelines 40PUQ30(40)BR001, 40PUQ30(40)BR002	
5	План разбивки трубопроводов 40PUQ30(40)BR003, 40PUQ30(40)BR004, 40PUQ30(40)BR005, 40PUQ30(40)BR006 на блоки, разрез 5–5, узлы 1, 2 Block division plan of pipelines 40PUQ30(40)BR003, 40PUQ30(40)BR004, 40PUQ30(40)BR005, 40PUQ30(40)BR006, section 5–5, units 1, 2	
6	Разрезы 6–6, 7–7 Sections 6–6, 7–7	
7	Разрезы 8–8...18–18, узлы 3...6 Sections 8–8...18–18, units 3...6	
8	Спецификация блоков трубопроводов 40PUQ30(40)BR003, 40PUQ30(40)BR004 Specification of pipelines blocks 40PUQ30(40)BR003, 40PUQ30(40)BR004	
9	Принципиальная схема трубопроводов 40PUQ30BR005, 40PUQ30BR006, узел 7, спецификация трубопроводов 40PUQ30BR005, 40PUQ30BR006 Schematik diagram of pipelines 40PUQ30BR005, 40PUQ30BR006 unit 7, specification of pipelines 40PUQ30BR005, 40PUQ30BR006	
10	Принципиальная схема трубопроводов 40PUQ40BR005, 40PUQ40BR006, узлы 8, 9, спецификация трубопроводов 40PUQ40BR005, 40PUQ40BR006 Schematik diagram of pipelines 40PUQ40BR005, 40PUQ40BR006, units 8, 9, specification of pipelines 40PUQ40BR005, 40PUQ40BR006	
11	Установка опор трубопроводов Installation of pipelines supports	
12	Блок 40PUQ30BR001MR001 Block 40PUQ30BR001MR001	
13	Блоки 40PUQ30BR001MR002, 003 Blocks 40PUQ30BR001MR002, 003	
14	Блок 40PUQ30BR001MR004 Block 40PUQ30BR001MR004	
15	Блок 40PUQ30BR001MR006 Block 40PUQ30BR001MR006	
16	Блок 40PUQ30BR001MR007 Block 40PUQ30BR001MR007	
17	Блок 40PUQ30BR002MR009 Block 40PUQ30BR002MR009	
18	Блоки 40PUQ40BR001MR010, 012, 014, 016 Blocks 40PUQ40BR001MR010, 012, 014, 016	
19	Блок 40PUQ40BR001MR011 Block 40PUQ40BR001MR011	
20	Блок 40PUQ40BR001MR013 Block 40PUQ40BR001MR013	
21	Блок 40PUQ40BR001MR015 Block 40PUQ40BR001MR015	
22	Блок 40PUQ40BR001MR017 Block 40PUQ40BR001MR017	
23	Блок 40PUQ40BR001MR019 Block 40PUQ40BR001MR019	
24	Блок 40PUQ40BR001MR020 Block 40PUQ40BR001MR020	
25	Блок 40PUQ40BR002MR022 Block 40PUQ40BR002MR022	
26	Блок 40PUQ30BR003MR001 Block 40PUQ30BR003MR001	
27	Блоки 40PUQ30BR003MR002, 004, 008, 012, 014, 018, 020, 022, 024 Blocks 40PUQ30BR003MR002, 004, 008, 012, 014, 018, 020, 022, 024	
28	Блок 40PUQ30BR003MR003 Block 40PUQ30BR003MR003	
29	Блоки 40PUQ30BR003MR005, 007, 009 Blocks 40PUQ30BR003MR005, 007, 009	
30	Блок 40PUQ30BR003MR011 Block 40PUQ30BR003MR011	
31	Блок 40PUQ30BR003MR013 Block 40PUQ30BR003MR013	
32	Блоки 40PUQ30BR003MR015, 016 Blocks 40PUQ30BR003MR015, 016	
33	Блок 40PUQ310BR003MR017 Block 40PUQ30BR003MR017	
34	Блок 40PUQ30BR003MR019 Block 40PUQ30BR003MR019	
35	Блок 40PUQ30BR003MR021 Block 40PUQ30BR003MR021	
36	Блок 40PUQ30BR003MR023 Block 40PUQ30BR003MR023	
37	Блок 40PUQ30BR003MR025 Block 40PUQ30BR003MR025	
38	Блок 40PUQ10BR004MR026 Block 40PUQ10BR004MR026	
39	Блоки 40PUQ30BR004MR027, 033, 035, 039, 041, 043, 045 Blocks 40PUQ30BR004MR027, 033, 035, 039, 041, 043, 045	
40	Блок 40PUQ30BR004MR028 Block 40PUQ30BR004MR028	
41	Блок 40PUQ30BR004MR030 Block 40PUQ30BR004MR030	
42	Блок 40PUQ30BR004MR032 Block 40PUQ30BR004MR032	
43	Блок 40PUQ30BR004MR034 Block 40PUQ30BR004MR034	
44	Блоки 40PUQ30BR004MR036, 037 Blocks 40PUQ30BR004MR036, 037	
45	Блок 40PUQ30BR004MR038 Block 40PUQ30BR004MR038	
46	Блок 40PUQ30BR004MR040 Block 40PUQ30BR004MR040	
47	Блок 40PUQ30BR004MR042 Block 40PUQ30BR004MR042	
48	Блок 40PUQ30BR004MR044 Block 40PUQ10BR004MR044	
49	Блок 40PUQ30BR004MR046 Block 40PUQ30BR004MR046	
50	Блок 40PUQ40BR003MR047 Block 40PUQ40BR003MR047	
51	Блоки 40PUQ40BR003MR048, 050, 054, 058, 061, 063, 065, 067 Blocks 40PUQ40BR003MR048, 050, 054, 058, 061, 063, 065, 067	
52	Блок 40PUQ40BR003MR049 Block 40PUQ40BR003MR049	
53	Блоки 40PUQ40BR003MR051, 055 Blocks 40PUQ40BR003MR051, 055	
54	Блоки 40PUQ40BR003MR053, 057 Blocks 40PUQ40BR003MR053, 057	
55	Блок 40PUQ40BR003MR059 Block 40PUQ40BR003MR059	
56	Блок 40PUQ40BR003MR060 Block 40PUQ40BR003MR060	
57	Блок 40PUQ40BR003MR062 Block 40PUQ40BR003MR062	
58	Блок 40PUQ40BR003MR064 Block 40PUQ40BR003MR064	
59	Блок 40PUQ40BR003MR066 Block 40PUQ40BR003MR066	
60	Блок 40PUQ40BR003MR068 Block 40PUQ40BR003MR068	
61	Блок 40PUQ40BR004MR069 Block 40PUQ40BR004MR069	
62	Блоки 40PUQ40BR004MR071, 073 Blocks 40PUQ40BR004MR071, 073	
63	Блоки 40PUQ40BR004MR072, 076, 078, 080, 082, 084 Blocks 40PUQ40BR004MR072, 076, 078, 080, 082, 084	
64	Блок 40PUQ40BR004MR075 Block 40PUQ40BR004MR075	
65	Блок 40PUQ40BR004MR077 Block 40PUQ40BR004MR077	
66	Блок 40PUQ40BR004MR079 Block 40PUQ40BR004MR079	
67	Блок 40PUQ40BR004MR081 Block 40PUQ40BR004MR081	
68	Блок 40PUQ40BR004MR083 Block 40PUQ40BR004MR083	
69	Блок 40PUQ40BR004MR085 Block 40PUQ40BR004MR085	
70	План на отм. –0,600, разрезы 19–19...22–22, узел 10, спецификация Plan at elev. –0,600, section 19–19...22–22, unit 10, specification	

ВЕДОМОСТЬ СПЕЦИФИКАЦИЙ
SPECIFICATION LIST

Лист Sheet	Наименование Description	Примечание Note
4	Спецификация блоков трубопроводов 40PUQ30(40)BR001, BR002 Blocks specification of pipelines 40PUQ30(40)BR001, BR002	
8	Спецификация блоков трубопроводов 40PUQ30(40)BR003, 40PUQ30(40)BR004 Blocks specification of pipelines 40PUQ30(40)BR003, 40PUQ30(40)BR004	
9	Спецификация трубопроводов 40PUQ30BR005, 40PUQ30BR006 Specification of pipelines 40PUQ30BR005, 40PUQ30BR006	
10	Спецификация трубопроводов 40PUQ40BR005, 40PUQ40BR006 Specification of pipelines 40PUQ40BR005, 40PUQ40BR006	

ВЕДОМОСТЬ ССЫЛОЧНЫХ И ПРИЛАГАЕМЫХ ДОКУМЕНТОВ
LIST OF REFERENCE AND ATTACHED DOCUMENTS

Обозначение Designation	Наименование Name	Примечание Note
Ссылочные документы Reference documents		
R37.KK34.42UQZ.PEB.TW.OK.WD001	42UQZ. Металлические конструкции трубопроводов ответственных потребителей 42UQZ. Metalwork Pipelines of essential services	
R37.KK34.42UQZ.0.KZ.OK.WD001	42UQZ. Строительные конструкции. Геометрия 42UQZ. Structures. Geometry	
R37.KK34.41UUP.0.AR.OK.WD001	Вентцентры туннелей трубопроводов ответственных потребителей. 41–47 UUP. Архитектурные решения Vent centers of Tunnels of pipelines essential consumers. 41–47 UUP. Architectural solutions	
R28.KK34.42UQX.0.KZ.OK.WD001	42UQX. Строительные конструкции. Геометрия 42UQX. Structures. Geometry	

ТЕХНИЧЕСКАЯ ХАРАКТЕРИСТИКА И СВОДКА МАСС ТРУБОПРОВОДОВ
PERFORMANCE AND WEIGHT DATA OF PIPELINES

Обозначение трубопровода / Pipeline designation	Наименование транспортируемого продукта / Description of transported matter	Подведомственность / Subject to	Рабочие условия трубопровода / Pipeline operating conditions: Давление, МПа / Pressure, MPa	Температура, °С / Temperature, °C	Условия гидроиспытаний / Hydraulic test conditions: Давление, МПа / Pressure, MPa	Минимальная температура стенки, °С / Minimal temperature of pipe wall, °C	Диаметр и толщина стенки трубопровода Dxs, мм / Diameter and thickness of pipe wall Dxs, mm	Масса трубопроводов, кг / Pipeline weight, kg: Общая / Total	В том числе / Including: Трубопровода / Pipeline weight	Опор / Support weight	Арматуры / Reinforcement weight
40PUQ30BR001	Морская вода Sea water	ПНАЭ Г–7–008–89 PNAE G–7–008–89	0,6	32	1,0	19	219,1x7,04	511,0	493,4	17,6	*
40PUQ30BR002			0,3	38	0,6			26,9	26,9	–	*
40PUQ40BR001			0,6	32	1,0			1005,8	976,4	29,4	*
40PUQ40BR002			0,3	38	0,6			26,9	26,9	–	*
40PUQ30BR003		ПНАЭ Г–7–008–89 PNAE G–7–008–89	0,3	38	0,6	19	89x3	114,2	113,7	0,5	*
40PUQ30BR004								107,2	106,7	0,5	*
40PUQ40BR003								75,1	73,6	1,5	*
40PUQ40BR004								66,1	64,6	1,5	*
40PUQ30BR005		ПНАЭ Г–7–008–89 PNAE G–7–008–89	0,3	38	0,6	19	180x16,4	187,0	186,0	1,0	*
40PUQ30BR006								208,7	207,2	1,5	*
40PUQ40BR005								174,9	173,4	1,5	*
40PUQ40BR006								234,2	232,2	2,0	*

* Вес арматуры уточняется при выборе поставщика.
* The weight of reinforcement is specified when selecting a supplier.

МЕТОДЫ И ОБЪЕМЫ КОНТРОЛЯ СВАРНЫХ СОЕДИНЕНИЙ
METHODS AND DEGREE OF INSPECTION OF WELDED JOINTS

Номер трубопровода / Pipeline number	Категория сварных соединений или категория трубопровода / Category of welded joints or category of pipeline	Номинальная толщина свариваемых деталей, мм / Nominal thickness of welded parts, mm	Неразрушающего, % / Non-destructive, %: Визуального и измерительного / Visual and measuring inspection	Гидравлические испытания / Hydraulic test	Капилярного или магнитопорошкового / Capillary or magnetic particle inspection	Радиографического / Radiographic inspection	Ультразвукового / Ultrasonic inspection	Подгонка металлическим калибром / Run with metal pass	Контроль герметичности / Leakproofness test	Разрушающего / Destructive: Определение механических свойств / Determination of stress-strain properties	Металлографические исследования / Metallographic examination	Испытания на стойкость к межкристаллитной коррозии / Intercrystalline corrosion proofness test
40PUQ30BR003	IIв	3	100	100	100	50	50	–	–	–	–	–
40PUQ30BR004												
40PUQ40BR003												
40PUQ40BR004												

(Объем контроля / Degree of inspection)

ХИМИЧЕСКИЙ СОСТАВ МОРСКОЙ ВОДЫ
CHEMICAL COMPOSITION OF SEA WATER

	Название Element	Величина Valne	Примечание Note
1	Кальций, мг/л Calcium, mg/l	360...420	
2	Магний, мг/л Magnesium, mg/l	1248...1322	
3	Натрий, мг/л Sodium, mg/l	7500...8500	
4	Калий, мг/л Potassium, mg/l	390...415	
5	Гидрокарбонаты, мг/л Hydrocarbonates, mg/l	73,2...109,8	
6	Карбонаты, мг/л Carbonates, mg/l	67,2...76,8	
7	Сульфаты, мг/л Sulphates, mg/l	2709...2761	
8	Хлориды, мг/л Chlorides, mg/l	19500	
9	Общее содержание, % General salt content, %	3,6000	
10	Жесткость (CaC_3), мг/л	6500	
11	Водородный показатель pH pH value	8	
12	Нерастворимые вещества, мг/л Insaluble matters, mg/l	20	
13	Биологические данные, мг/100 $м^3$ Biological assay data, mg/100 m^3	70	

УСЛОВНЫЕ ОБОЗНАЧЕНИЯ
LEGEND

Обозначение	Наименование
	Граница проектирования Design boundary
	Переход Adapter
	Спуск воды из трубопровода Water discharge from pipeline
	Соединение трубопроводов Connection of pipeline
	Соединение трубопроводов отсутствует No connection of pipeline
5	Порядковый номер скользящей опоры Sequence number of sliding support
1	Порядковый номер неподвижной опоры Sequence number of fixed support
105	Порядковый номер блока трубопровода Sequence number of pipeline block
	Направление движения среды Medium motion direction
	Рукав напорный Delivery hose
	Игольчатый вентиль Needle valve
	Двустворчатый клапан Butterfly valve
	Затвор обратный Check valve
	Граница блока Limit of block
	Точка контроля и обозначение измеряемого параметра Check point and designation of the parameter to be measured

ОБЩИЕ УКАЗАНИЯ

1 Рабочие чертежи разработаны в соответствии с контрактом No77–258/1415800 на разработку рабочей документации.

2 Рабочая документация разработана в соответствии с Российскими нормативными документами, действующими на 15.05.2009.

3 Классификация элементов трубопроводов:

трубопроводы опорожнения PEB (ø219,1x7,04):
- класс безопасности 2 по НП–001–97 (ПНАЭ Г–01–011–97) "Общие положения обеспечения безопасности атомных станций." ОПБ–88/97;
- группа В по ПНАЭ Г–7–008–89 "Правила устройства и безопасной эксплуатации оборудования и трубопроводов атомных энергетических установок";
- категория сейсмостойкости I по НП–031–01 "Нормы проектирования сейсмостойких атомных станций";

трубопроводы дренажа туннелей (ø89x3):
- класс безопасности 3 по НП–001–97 (ПНАЭ Г–01–011–97) "Общие положения обеспечения безопасности атомных станций." ОПБ–88/97;
- группа С по ПНАЭ Г–7–008–89 "Правила устройства и безопасной эксплуатации оборудования и трубопроводов атомных энергетических установок";
- категория сейсмостойкости I по НП–031–01 "Нормы проектирования сейсмостойких атомных станций";

трубопроводы осушения туннелей (ø180x16,4):
- класс безопасности 4 по НП–001–97 (ПНАЭ Г–01–011–97) "Общие положения обеспечения безопасности атомных станций." ОПБ–88/97;
- категория сейсмостойкости II по НП–031–01 "Нормы проектирования сейсмостойких атомных станций";

4 Толщина труб принята по расчету на внутреннее давление воды с учетом увеличения толщины стенки труб на величину коррозии стенок труб в течении всего периода эксплуатации.

5 Опорожнение трубопроводов PEB предусматривается через дренажные узлы, которые устанавливаются в нижних точках трубопроводов со сбросом воды в специально предусмотреные дренажные приямки в туннелях UQZ.

Диаметр дренажных узлов принят из условия самотечного опорожнения трубопроводов в течение двух часов.

Трубопроводы опорожнения PEB прокладываются в туннелях 42UQZ с уклоном в сторону слива воды в приямки. Величина уклона трубопроводов определяется величиной уклона дна туннелей.

6 Дренаж туннелей и сброс воды при опорожнении трубопроводов PEB в сифонный колодец 42UQX осуществляется артезианскими насосами, всасывающие патрубки которых находятся в дренажных приямках.

7 Осушение туннелей в случае разрыва трубопровода предусматривается переносными погружными насосами со сбросом откачиваемой воды в отводящий канал 41UQN.

8 Трубопроводы дренажа и трубопроводы осушения туннелей прокладываются в помещении 41UUP, в земле и по территории сифонного колодца 42UQX.

9 Компенсация температурных удлинений осуществляется за счет естественных углов поворота трассы трубопроводов.

Все усилия и моменты, возникающие от сочетания действующих нагрузок (осевых, боковых и весовых), воспринимаются неподвижными опорами.

10 Монтаж трубопроводов опорожнения PEB осуществляется из блоков с фланцевыми соединениями. Трубопроводы изготавливаются из углеродистой стали по ASME–SA–106 Gr.B. Фитинги и фланцы изготавливаются из углеродистой стали по ASME–SA–105.

Монтаж трубопроводов дренажа туннелей и трубопроводов осушения туннелей осуществляется из блоков на сварке. Трубопроводы 89x3 изготавливаются из титанового сплава. Трубопроводы 180x16,4 изготавливаются из полиэтилена.

Сборка трубопроводов осуществляется непосредственно на стройке из деталей (трубы, отводы, фланцы блоков).

11 Сварные соединения по ПНАЭ Г–7–010–89 "Оборудование и трубопроводы атомных энергетических установок. Сварные соединения и наплавки. Правила контроля" для трубопроводов дренажа туннелей относятся к категории II, подкатегории IIв. Контроль качества сварных соединений по ПНАЭ Г–7–010–89 "Оборудование и трубопроводы атомных энергетических установок. Сварные соединения и наплавки. Правила контроля".

12 Торцевая сварка элементов полиэтиленовых трубопроводов выполняется сварочным аппаратом, оснащенным гидравлическим приводом с ЧПУ с блоком протоколирования. Контроль качества сварных соединений по СНиП 3.05.05–84 "Технологическое оборудование и технологические трубопроводы".

13 Трубопроводы опорожнения PEB монтируются с обязательным устройством антикоррозийного защитного покрытия внутренней и наружной поверхности труб от влияния морской воды, грунта и кислорода воздуха в соответствии с техническими требованиями R28.KK36.0.0.TW.TT.WD002.

Данные работы выполняются отдельными проектами и в состав данного комплекта рабочей документации не входят.

14 Строительная часть выполняется по чертежам пакета 3 10 2 8.

15 Узлы проходок трубопроводов через железобетонные конструкции сифонного колодца 42UQX в состав данного комплекта рабочей документации не входят.

GENERAL GUIDELINES

1 The working drawings have been developed in accordance with basic provisions of the Contract No77–258/1415800 on elaboration of working documentation.

2 Working documents have been worked out in compliance with the Russian regulatory documents in force as on 15.05.2009.

3 Classification of pipelines elements:

emptying pipelines PEB (ø219,1x7,04):
- safety class 2 NP–001–97 (PNAE G–01–011–97) "General regulations on safety assurance at Nuclear power plants". OPB – 88/97;
- group B as per PNAE G–7–008–89 "Regulations on arrangement and safe operation of equipment and pipelines at Nuclear power plants";
- seismic stability category I in conformity with NP–031–01 "Design Standarts for aseismic nuclear power stations";

pipelines for drainage of tunnels (ø89x3):
- safety class 3 NP–001–97 (PNAE G–01–011–97) "General regulations on safety assurance at Nuclear power plants". OPB – 88/97;
- group C as per PNAE G–7–008–89 "Regulations on arrangement and safe operation of equipment and pipelines at Nuclear power plants";
- seismic stability category I in conformity with NP–031–01 "Design Standarts for aseismic nuclear power stations";

pipelines for drying–out of tunnels (ø180x16,4):
- safety class 4 NP–001–97 (PNAE G–01–011–97) "General regulations on safety assurance at Nuclear power plants". OPB – 88/97;
- seismic stability category II in conformity with NP–031–01 "Design Standarts for aseismic nuclear power stations";

4 Thickness of pipes is accepted rating the internal pressure of water considering increase of pipe wall thickness to pipe walls corrosion value during the whole period of operation.

5 Pipelines PEB emptying is to be executed through drain units that should be placed in lower points of pipelines and imply water discharge to the drainage pits in the tunnels UQZ.

Drainage units diameter is accepted due to pipelines gravity emptying within two hours.

Emptying pipelines PEB are to be laid out in tunnels 42UQZ on the slope towards water discharge into the pits. Pipelines gradient is determined by the tunnel floor slope.

6 Tunnels drainage and water discharge at emptying of PEB pipelines into the siphon well 33UQX is carried out by artesian pumps, suction tubes of which are placed in the drainage pits.

7 Tunnels drying–out in case of pipeline break is to be carried out by portable submerged–type pumps with drainage water discharge into the outlet canal 41UQN.

8 Drainage and drying–out pipelines are to be laid in compartment 41UUP, in the ground and in the territory of the siphon well 42UQX.

9 Temperature rolling–out compensation is carried out due to natural turning angle of pipeline route.

All the forces and moments appeared from load combination (axial load, side load and weight load) are sustained by fixed supports.

10 Placing of emptying pipelines PEB is to be carried out of blocks by flange connections. Pipelines are made of carbon steel ASME–SA–106 Gr.B. The fittings and the flanges are made of carbon steel in accordance with ASME–SA–105.

Placing of drainage and drying–out pipelines is to be carried out of blocks at welding. Pipelines 89x3 are made of titanium alloy. Pipelines 180x16,4 are made of NDPE.

Assembly of pipelines is carried out directly at site of parts (pipes, pipe bends, flanges of blocks).

11 Welding joints are as per PNAE G–7–010–89 "Equipment and pipelines for Nuclear power plants. Welding joints and depositions. Rules of control" for drainage of tunnels are related to category II, subcategory IIb. Welding joints quality control is as per PNAE G–7–010–89 "Equipment and pipelines for Nuclear power plants. Welding joints and depositions. Rules of control".

12 End welding of polyethylene pipeline elements is performed by a welding machine equipped with a hydraulic CNC drive with a logging unit. Welding joints quality control is as per SNiP 3.05.05–84 "Technological equipment and technological pipelines".

13 Pipelines PEB emptying are to be laid using anticorrosion protection coating of internal and external surfaces of pipes from sea water, ground and atmospheric oxygen impact in accordance with the technical requirements of R28.KK36.0.0.TW.TT.WD002.

The given works are to be implemented by separate designs and are not in the scope of present set of working documentation.

14 Civil part is to be implemented on drawings of package 3 10 2 8.

15 Nodes penetrations of pipelines through concrete structures siphon well 42UQX part of the documentation package are not included.

СХЕМА РАСПОЛОЖЕНИЯ
KEY PLAN

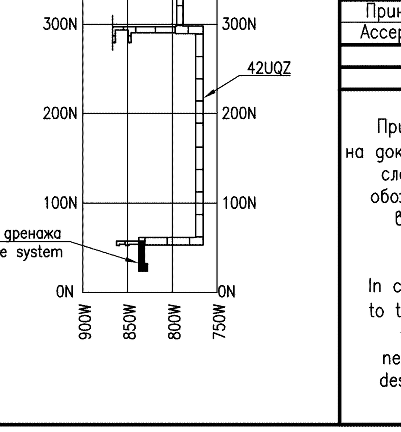

Package Number 3 13 6 63

File: R37 KK34 42UQZ PUQ TW OK WD001_01=0

Rev N	Issue N	Issued for	Signature	Issue sheet N

Принял Accepted	Kats		FSUE "Atomenergoproekt" Moscow 2018
Arch. No		Date	

При переписке в ссылке на документ (лист документа) следует указывать его обозначение, приведенное в основной надписи

In correspondence referring to the document (sheet of the document) it is necessary to specify its designation, given in the basic inscription

Данный чертеж не подлежит размножению или передаче другим организациям и лицам без согласия АО "Мособлгидропроект"

This drawing is not to be reproduced or transferred to other organizations or private persons without approval of Joint–stock Company "Institute HYDROPROJECT"

NUCLEAR POWER CORPORATION OF INDIA LTD

R37.KK34.42UQZ.PUQ.TW.OK.WD001

АЭС "КУДАНКУЛАМ" БЛОК 4
NPP "KUDANKULAM" UNIT 4

Изм. Rev.	N уч. N pat.	Лист Sheet	N док. Doc. No	Подпись Signature	Дата Date
Утвердил Approved		Togoev			10.18
Н. контр. Inspector		Alfimova			10.18
Разраб. Designed		Panov			10.18

42UQZ Система дренажа сбросных вод. Дренаж воды из туннелей в случае разрыва трубопровода
42UQZ Drain water removal system. Water removal from tunnels in case of pipeline break

Стадия Phase	Лист Sheet	Листов Sheets
WD	1	70

Общие данные
General data

Joint-stock Company "Institute HYDROPROJECT" Dedowsk 2018

Format A2x4

Inv.Nr 29742 Date 22.01.19

Orig. arch. Nr.	Date	Replace arch. Nr
449	02.11.2018	

СХЕМА ПРИНЦИПИАЛЬНАЯ
SCHEMATIC DIAGRAM

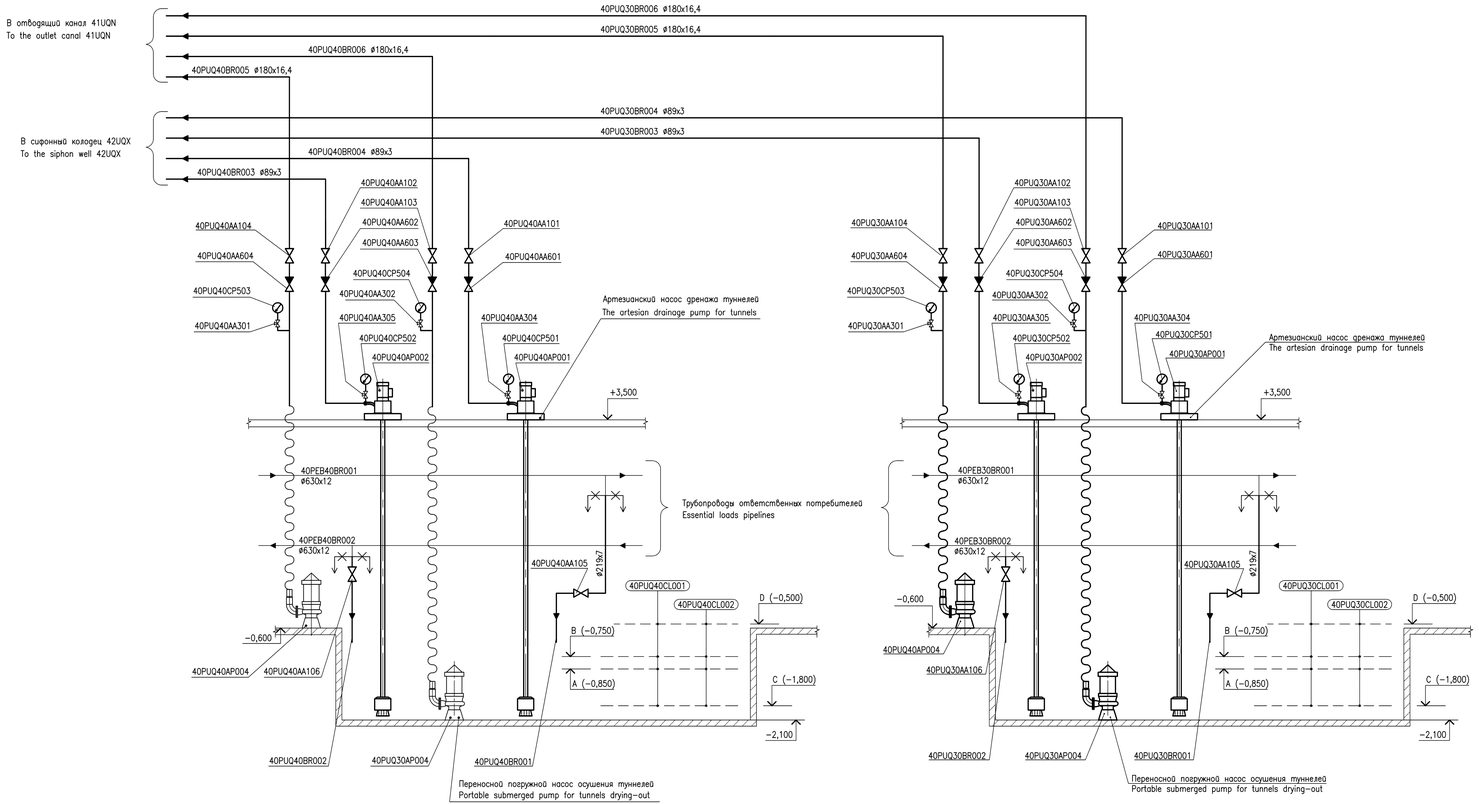

A – Включение первого насоса
Actuation of the first pump
B – Включение второго насоса
Actuation of the second pump
C – Отключение насосов
Switching-off of pumps
D – Включение аварийного сигнала затопления
Actuation of the emergency flooding signal

ПЕРЕЧЕНЬ ЭЛЕМЕНТОВ
LIST OF ELEMENTS

Поз. по СЗС	Код по системе KKS	Наименование	Кол.	Примечание
Item as per specification of buildings and compartments	Code as per KKS	Name	Quant.	Note
	40PUQ30AP001 40PUQ30AP002 40PUQ40AP001 40PUQ40AP002	Агрегат насосный артезианского типа Artesian pump unit of type	4	Q=20 м³/ч H=0,3 МПа Q=20 m³/h H=0,3 MPa
	40PUQ30CP501 40PUQ30CP502 40PUQ40CP501 40PUQ40CP502	Манометр Pressure gauge	4	Комплектно с агрегатом насосным артезианского типа Complete with artesian pump unit
	40PUQ30AA304 40PUQ30AA305 40PUQ40AA304 40PUQ40AA305	Кран под манометр Pressure gauge valve	4	Комплектно с агрегатом насосным артезианского типа Complete with artesian pump unit
	40PUQ30AP004 40PUQ40AP004	Электронасос погружной Submerged pump	2	Q=180 м³/ч H=0,3 МПа Q=180 m³/h H=0,3 MPa
	40PUQ30AA103 40PUQ30AA104 40PUQ40AA103 40PUQ40AA104	Двустворчатый клапан Butterfly valve	4	DN 150 P 1,0 МПа DN 150 P 1,0 MPa
	40PUQ30AA105 40PUQ30AA106 40PUQ40AA105 40PUQ40AA106	Двустворчатый клапан Butterfly valve	4	DN 200 P 1,0 МПа DN 200 P 1,0 MPa
	40PUQ30AA101 40PUQ30AA102 40PUQ40AA101 40PUQ40AA102	Двустворчатый клапан Butterfly valve	4	DN 80 P 1,0 МПа DN 80 P 1,0 MPa
	40PUQ30AA603 40PUQ30AA604 40PUQ40AA603 40PUQ40AA604	Затвор обратный Check valve	4	DN 150 P 1,0 МПа DN 150 P 1,0 MPa
	40PUQ30AA601 40PUQ30AA602 40PUQ40AA601 40PUQ40AA602	Затвор обратный Check valve	4	DN 80 P 1,0 МПа DN 80 P 1,0 MPa
	40PUQ30CP503 40PUQ30CP504 40PUQ40CP503 40PUQ40CP504	Мановакуумметр показывающий Combined pressure-and-vacuum gauge indicating	4	
	40PUQ30AA301 40PUQ30AA302 40PUQ40AA301 40PUQ40AA302	Игольчатый вентиль Needle valve	4	DN 10 P 1,0 МПа DN 10 P 1,0 MPa
	40PUQ30CL001 40PUQ30CL002 40PUQ40CL001 40PUQ40CL002	Погружной датчик уровня Submersible Level Transmitter	4	

СХЕМА РАСПОЛОЖЕНИЯ
KEY PLAN

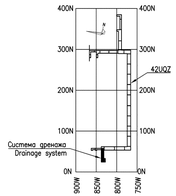

Данный чертеж не подлежит размножению или передаче другим организациям и лицам без согласия АО "Мособлгидропроект"

This drawing is not to be reproduced or transferred to other organizations or private persons without approval of Joint-stock Company "Institute HYDROPROJECT"

Package Number 3 13 6 63
File: R37 KK34 42UQZ PUQ TW OK WD001_02=0

Изм. Rev.	N уч. N pot.	Лист Sheet	N док. Doc. No	Подпись Signature	Дата Date
Утверди Approved	Panov				10.18
Н. контр. Inspector	Afimova				10.18
Разраб. Designed	Solodonikova				10.18

R37.KK34.42UQZ.PUQ.TW.OK.WD001

АЭС "КУДАНКУЛАМ" БЛОК 4
NPP "KUDANKULAM" UNIT 4

42UQZ
Система дренажа сбросных вод. Дренаж воды из туннелей в случае разрыва трубопровода
42UQZ
Drain water removal system. Water removal from tunnels in case of pipeline break

Схема принципиальная
Schematic diagram

Стадия Phase	Лист Sheet	Листов Sheets
WD	2	

Joint-Stock Company "Institute HYDROPROJECT" Dedovsk 2018

Format A2x3

Inv.N 39742 Date 22.01.19

Инв. арх. №	Подпись арх. №
449	

ПЛАН РАЗБИВКИ ТРУБОПРОВОДОВ 40PUQ30BR001, 40PUQ30BR002, 40PUQ40BR001, 40PUQ40BR002 НА БЛОКИ.
BLOCK DIVISION PLAN OF PIPELINES 40PUQ30BR001, 40PUQ30BR002, 40PUQ40BR001, 40PUQ40BR002

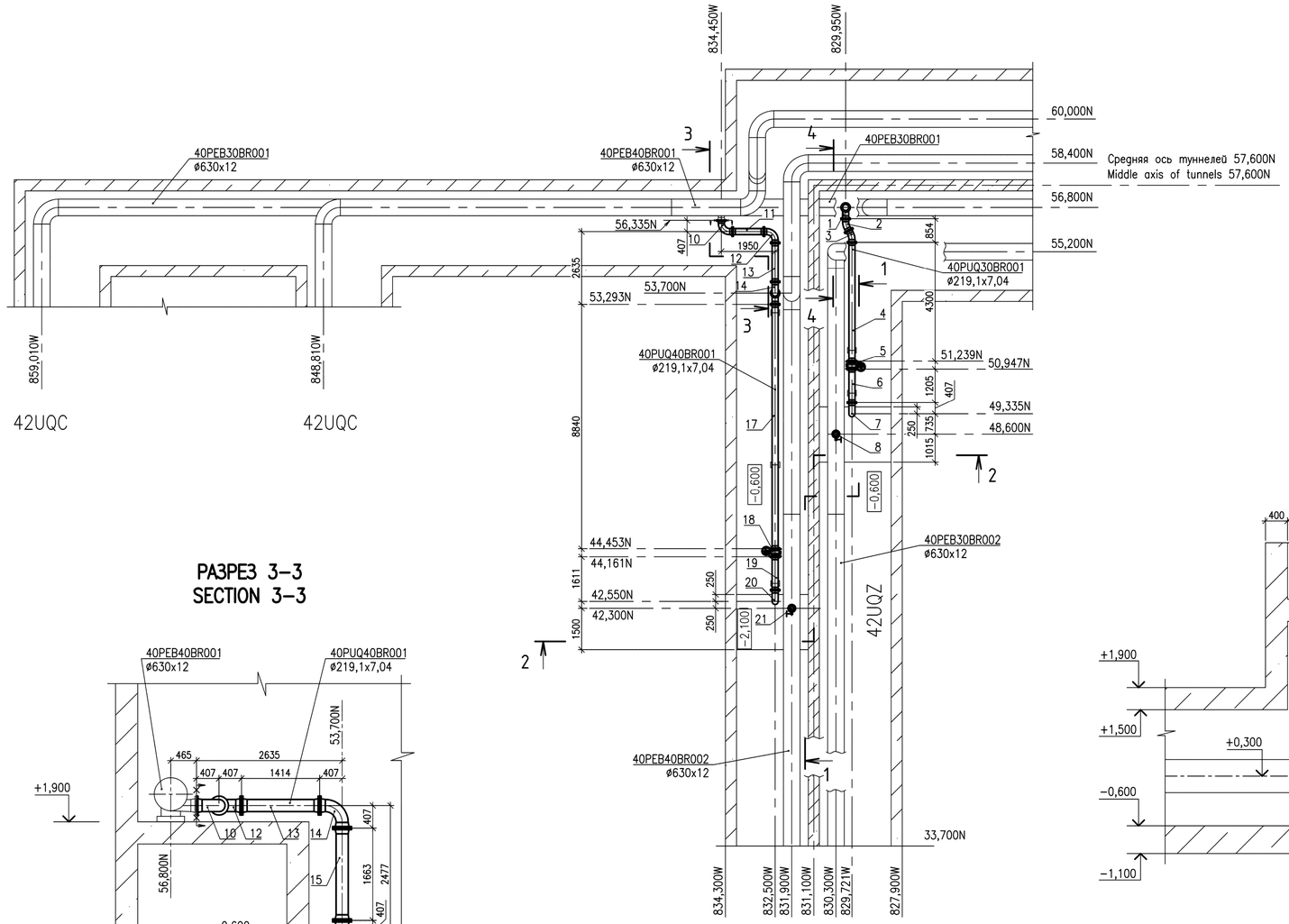

РАЗРЕЗ 2–2
SECTION 2–2

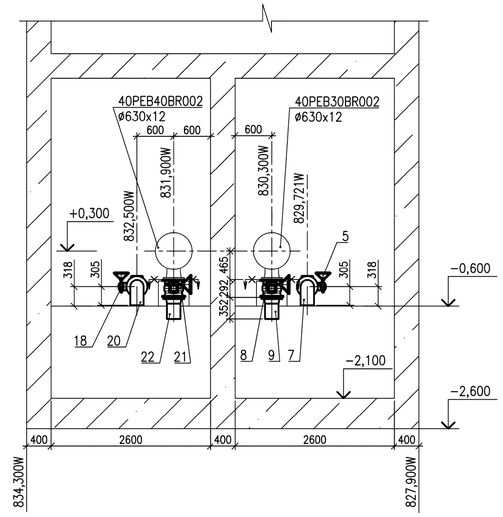

РАЗРЕЗ 1–1
SECTION 1–1

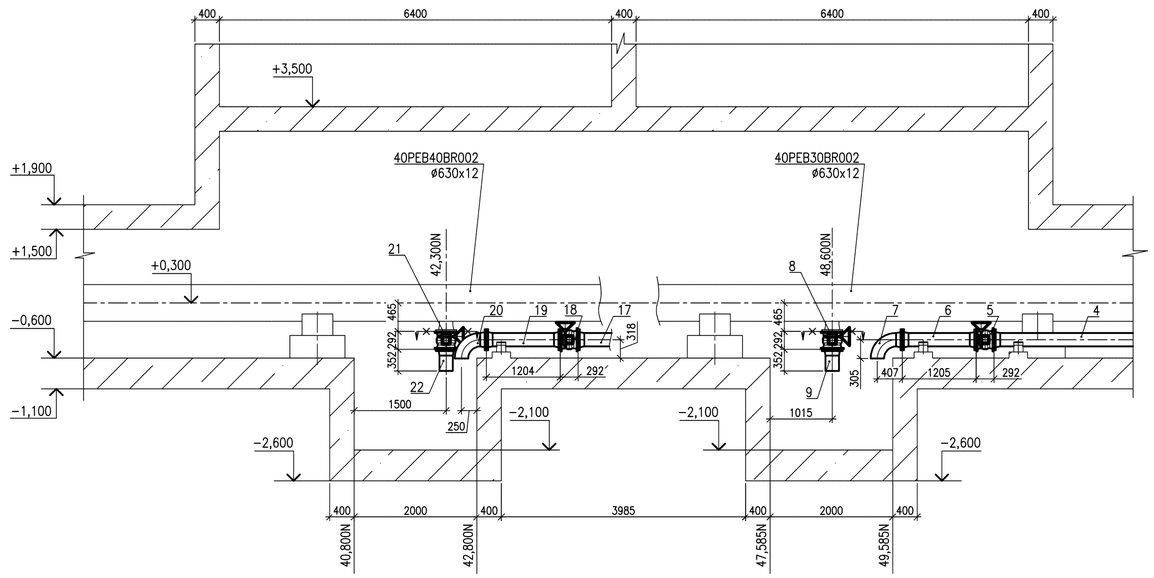

РАЗРЕЗ 3–3
SECTION 3–3

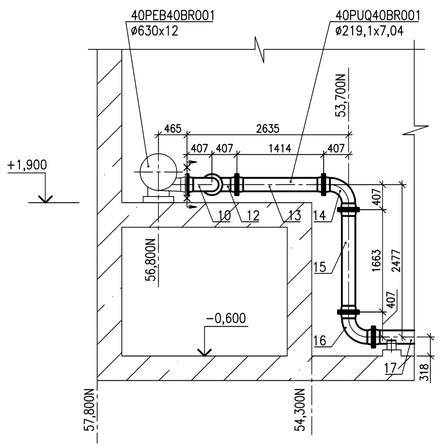

РАЗРЕЗ 4–4
SECTION 4–4

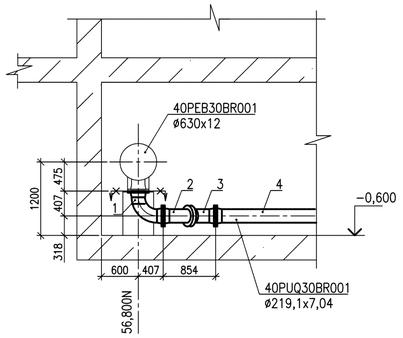

СХЕМА РАСПОЛОЖЕНИЯ
KEY PLAN

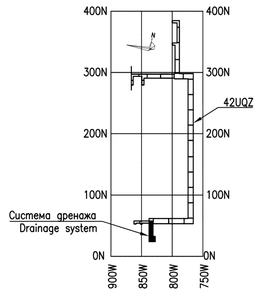

Спецификацию блоков трубопроводов смотри лист 4.

For pipelines blocks specification see sheet 4.

Package Number 3 13 6 63
File: R37 KK34 42UQZ PUQ TW OK WD001_03=0

Данный чертеж не подлежит размножению или передаче другим организациям и лицам без согласия АО "Мособлгидропроект"

This drawing is not to be reproduced or transferred to other organizations or private persons without approval of Joint-stock Company "Institute HYDROPROJECT"

Изм. / Rev.	N уч. / N pat.	Лист / Sheet	N док. / Doc. No	Подпись / Signature	Дата / Date
Утвердил / Approved		Panov			10.18
Н. контр. / Inspector		Alfimova			10.18
Разраб. / Designed		Solodovnikova			10.18

R37.KK34.42UQZ.PUQ.TW.OK.WD001

АЭС "КУДАНКУЛАМ" БЛОК 4
NPP "KUDANKULAM" UNIT 4

42UQZ
Система дренажа сбросных вод. Дренаж воды из туннелей в случае разрыва трубопровода
42UQZ
Drain water removal system. Water removal from tunnels in case of pipeline break

Стадия / Phase	Лист / Sheet	Листов / Sheets
WD	3	

План разбивки трубопроводов 40PUQ30BR001, 40PUQ30BR002, 40PUQ40BR001, 40PUQ40BR002 на блоки, разрезы 1–1...4–4
Block division plan of pipelines 40PUQ30BR001, 40PUQ30BR002, 40PUQ40BR001, 40PUQ40BR002, section 1–1...4–4

Joint-stock Company "Institute HYDROPROJECT"
Dedovsk 2018

Format A1

Inv.Nr 29742 Date 22.01.19

Replace arch. Nr	Date	Orig. arch. Nr.
	22.11.2018	449

ПЛАН РАССТАНОВКИ ОПОР НА ТРУБОПРОВОДАХ 40PUQ30BR001, 40PUQ40BR001.
LAYOUT OF SUPPORTS ON THE PIPELINES 40PUQ30BR001, 40PUQ40BR001.

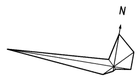

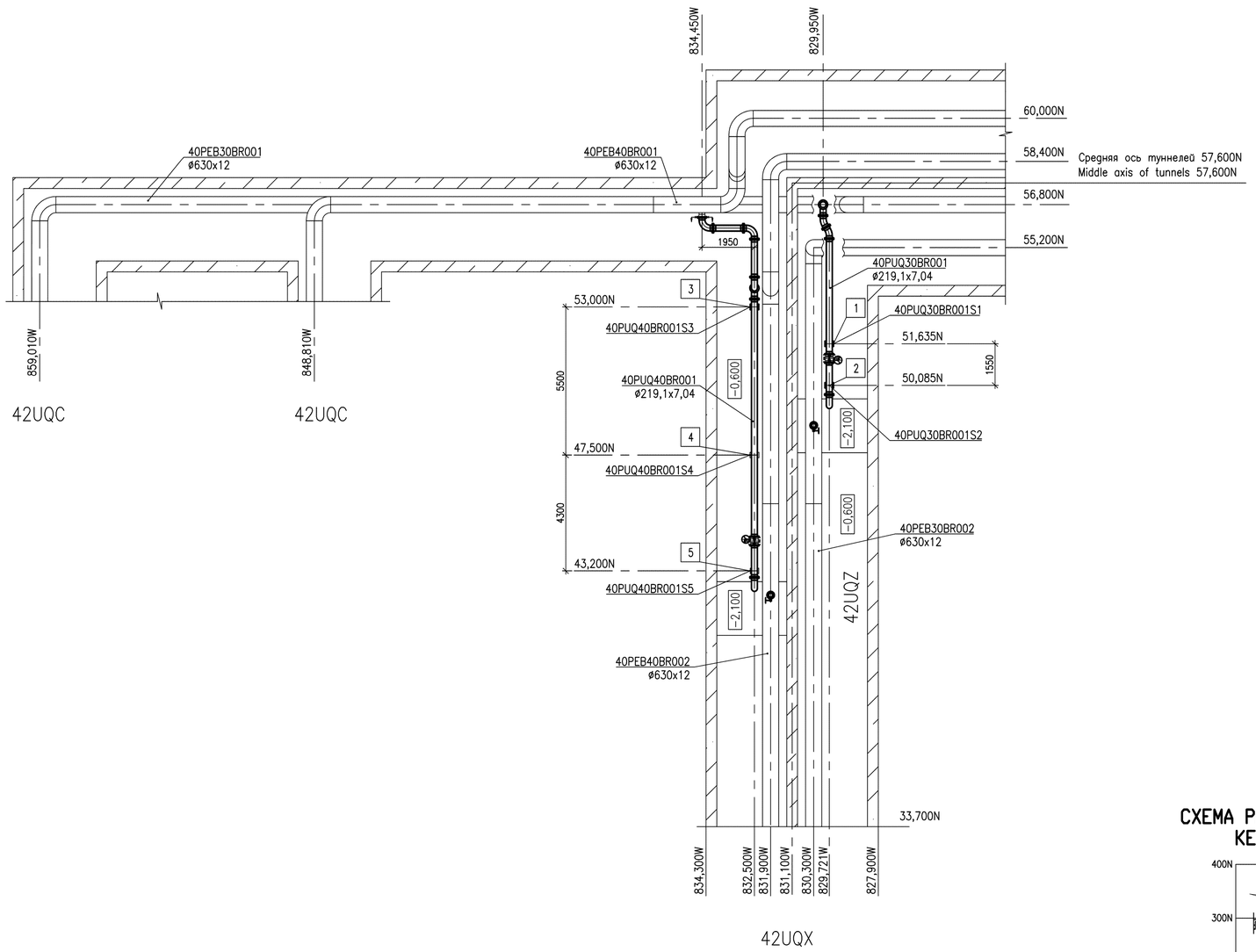

ВЕДОМОСТЬ ОПОР ТРУБОПРОВОДОВ 40PUQ30(40)BR001
LIST OF PIPELINES SUPPORTS 40PUQ30(40)BR001

Номер опоры на плане Support number on the plan	Код по системе KKS Code as per KKS	Наименование Description			Отметка Elevation	
		Технологическая опора Technological support	Кол. Q−ty	Масса ед.,кг Unit weight, kg	Пол туннеля Tunnel floor	Ось трубопровода Pipeline axis
1	40PUQ30BR001S1	Скользящая направляющая опора Sliding guide support	1	11,72	−0,600	−0,282
2	40PUQ30BR001S2	Неподвижная опора Fixed support	1	5,91	−0,600	−0,282
3	40PUQ40BR001S3	Скользящая направляющая опора Sliding guide support	1	11,72	−0,600	−0,282
4	40PUQ40BR001S4	Скользящая направляющая опора Sliding guide support	1	11,72	−0,600	−0,282
5	40PUQ40BR001S5	Неподвижная опора Fixed support	1	5,91	−0,600	−0,282

СПЕЦИФИКАЦИЯ БЛОКОВ ТРУБОПРОВОДОВ 40PUQ30(40)BR001, BR002
BLOCKS SPECIFICATION OF PIPELINES 40PUQ30(40)BR001, BR002

Поз. Pos.	Обозначение Designation	Наименование Name of block	Кол. Q−ty	Масса ед., кг Unit weight, kg	Примечание Note
1	R37.KK34.42UQZ.PUQ.TW.OK.WD001 лист 12 Sheet 12	Блок 40PUQ30BR001MR001 Block 40PUQ30BR001MR001	1	65,9	
2	R37.KK34.42UQZ.PUQ.TW.OK.WD001 лист 13 Sheet 13	Блок 40PUQ30BR001MR002 Block 40PUQ30BR001MR002	1	60,4	
3	R37.KK34.42UQZ.PUQ.TW.OK.WD001 лист 13 Sheet 13	Блок 40PUQ30BR001MR003 Block 40PUQ30BR001MR003	1	60,4	
4	R37.KK34.42UQZ.PUQ.TW.OK.WD001 лист 14 Sheet 14	Блок 40PUQ30BR001MR004 Block 40PUQ30BR001MR004	1	186,2	
5	ASME B16.34−2006	Двустворчатый клапан 200 NB; Class 150 Butterfly valve 200 NB; Class 150 40PUQ30AA105	1	–	
6	R37.KK34.42UQZ.PUQ.TW.OK.WD001 лист 15 Sheet 15	Блок 40PUQ30BR001MR006 Block 40PUQ30BR001MR006	1	72,3	
7	R37.KK34.42UQZ.PUQ.TW.OK.WD001 лист 16 Sheet 16	Блок 40PUQ30BR001MR007 Block 40PUQ30BR001MR007	1	48,2	
8	ASME B16.34−2006	Двустворчатый клапан 200 NB; Class 150 Butterfly valve 200 NB; Class 150 40PUQ30AA106	1	–	
9	R37.KK34.42UQZ.PUQ.TW.OK.WD001 лист 17 Sheet 17	Блок 40PUQ30BR002MR009 Block 40PUQ30BR002MR009	1	26,9	
10	R37.KK34.42UQZ.PUQ.TW.OK.WD001 лист 18 Sheet 18	Блок 40PUQ40BR001MR010 Block 40PUQ40BR001MR010	1	65,9	
11	R37.KK34.42UQZ.PUQ.TW.OK.WD001 лист 19 Sheet 19	Блок 40PUQ40BR001MR011 Block 40PUQ40BR001MR011	1	69,7	
12	R37.KK34.42UQZ.PUQ.TW.OK.WD001 лист 18 Sheet 18	Блок 40PUQ40BR001MR012 Block 40PUQ40BR001MR012	1	65,9	
13	R37.KK34.42UQZ.PUQ.TW.OK.WD001 лист 20 Sheet 20	Блок 40PUQ40BR001MR013 Block 40PUQ40BR001MR013	1	79,9	
14	R37.KK34.42UQZ.PUQ.TW.OK.WD001 лист 18 Sheet 18	Блок 40PUQ40BR001MR014 Block 40PUQ40BR001MR014	1	65,9	
15	R37.KK34.42UQZ.PUQ.TW.OK.WD001 лист 21 Sheet 21	Блок 40PUQ40BR001MR015 Block 40PUQ40BR001MR015	1	89,4	
16	R37.KK34.42UQZ.PUQ.TW.OK.WD001 лист 18 Sheet 18	Блок 40PUQ40BR001MR016 Block 40PUQ40BR001MR016	1	65,9	
17	R37.KK34.42UQZ.PUQ.TW.OK.WD001 лист 22 Sheet 22	Блок 40PUQ40BR001MR017 Block 40PUQ40BR001MR017	1	353,4	
18	ASME B16.34−2006	Двустворчатый клапан 200 NB; Class 150 Butterfly valve 200 NB; Class 150 40PUQ40AA105	1	–	
19	R37.KK34.42UQZ.PUQ.TW.OK.WD001 лист 23 Sheet 23	Блок 40PUQ40BR001MR019 Block 40PUQ40BR001MR019	1	72,2	
20	R37.KK34.42UQZ.PUQ.TW.OK.WD001 лист 24 Sheet 24	Блок 40PUQ40BR001MR020 Block 40PUQ40BR001MR020	1	48,2	
21	ASME B16.34−2006	Двустворчатый клапан 200 NB; Class 150 Butterfly valve 200 NB; Class 150 40PUQ40AA106	1	–	
22	R37.KK34.42UQZ.PUQ.TW.OK.WD001 лист 25 Sheet 25	Блок 40PUQ40BR002MR022 Block 40PUQ40BR002MR022	1	26,9	

Номера позиций данной спецификации соответствуют номерам блоков на листе 3.
Position numbers of this specification correspond with blocks numeration on Sheet 3.

СХЕМА РАСПОЛОЖЕНИЯ
KEY PLAN

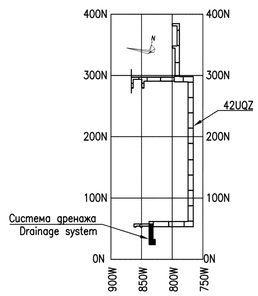

Package Number 3 13 6 63
File: R37 KK34 42UQZ PUQ TW OK WD001_04=0

Данный чертеж не подлежит размножению или передаче другим организациям и лицам без согласия АО "Мособлгидропроект"

This drawing is not to be reproduced or transferred to other organizations or private persons without approval of Joint-stock Company "Institute HYDROPROJECT"

Изм. Rev.	N уч. N pat.	Лист Sheet	N док. Doc. No	Подпись Signature	Дата Date
Утвердил Approved		Panov			10.18
Н. контр. Inspector		Alfimova			10.18
Разраб. Designed		Solodovnikova			10.18

R37.KK34.42UQZ.PUQ.TW.OK.WD001

АЭС "КУДАНКУЛАМ" БЛОК 4
NPP "KUDANKULAM" UNIT 4

42UQZ
Система дренажа сбросных вод. Дренаж воды из туннелей в случае разрыва трубопровода
42UQZ
Drain water removal system. Water removal from tunnels in case of pipeline break

План расстановки опор на трубопроводах 40PUQ30(40)BR001, спецификация блоков трубопроводов 40PUQ30(40)BR001, 40PUQ30(40)BR002
Layout of supports on the pipelines 40PUQ30(40)BR001, blocks specification of pipelines 40PUQ30(40)BR001, 40PUQ30(40)BR002

Стадия Phase	Лист Sheet	Листов Sheets
WD	4	

Joint-stock Company
"Institute HYDROPROJECT"
Dedovsk 2018

Format A1

Inv.Nr 29742 Date 22.01.19

Orig. arch. Nr.	Date	Replace arch. Nr.
449	12.11.2018	

ПЛАН РАЗБИВКИ ТРУБОПРОВОДОВ 40PUQ30(40)BR003, 40PUQ30(40)BR004, 40PUQ30(40)BR005, 40PUQ30(40)BR006 НА БЛОКИ
BLOCK DIVISION PLAN OF PIPELINES 40PUQ30(40)BR003, 40PUQ30(40)BR004, 40PUQ30(40)BR005, 40PUQ30(40)BR006

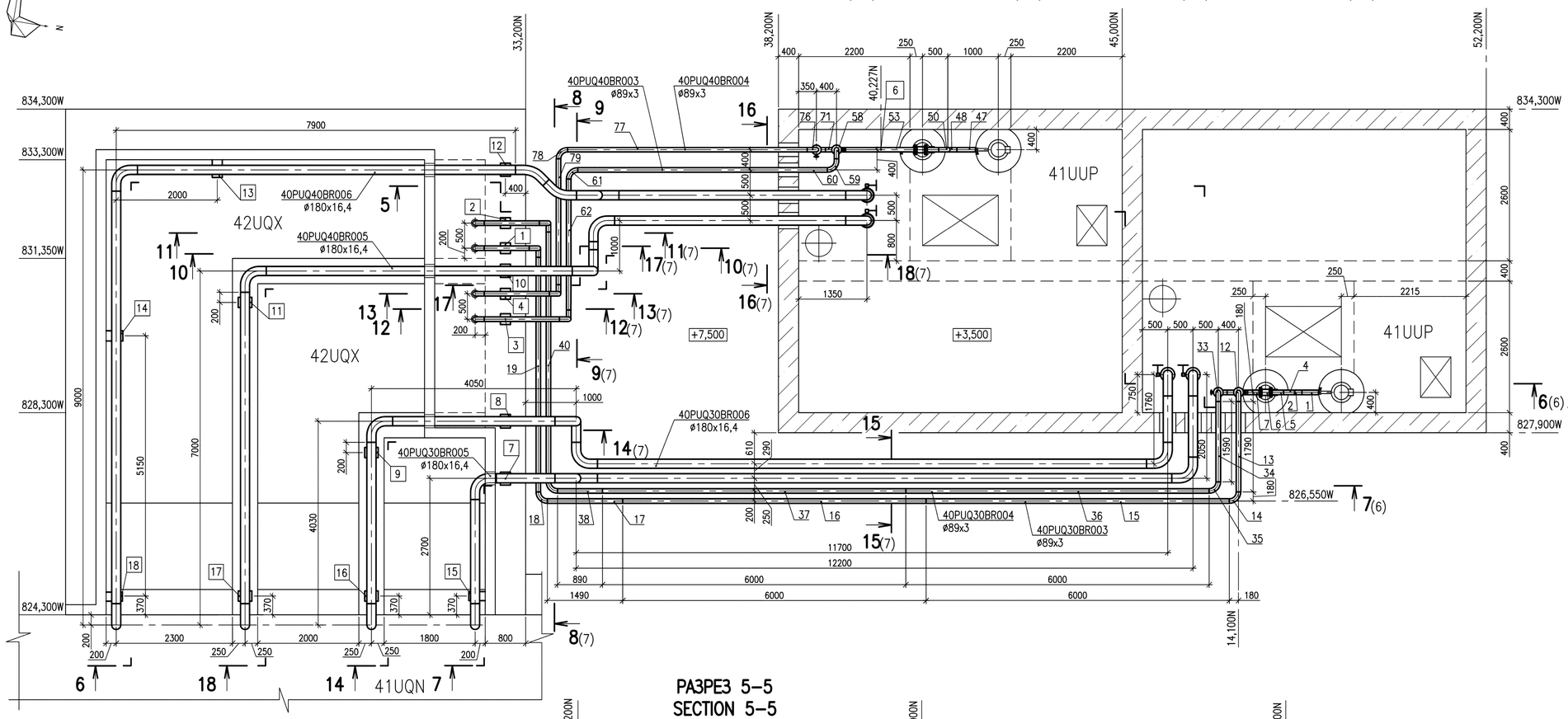

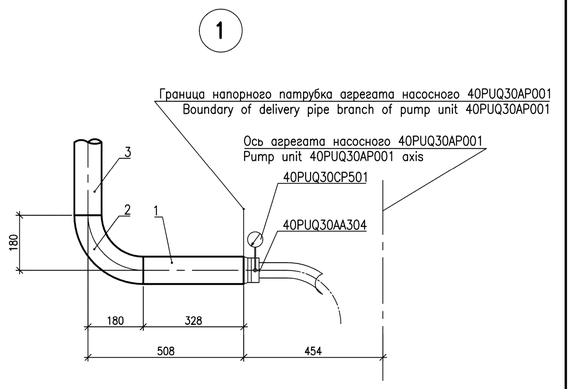

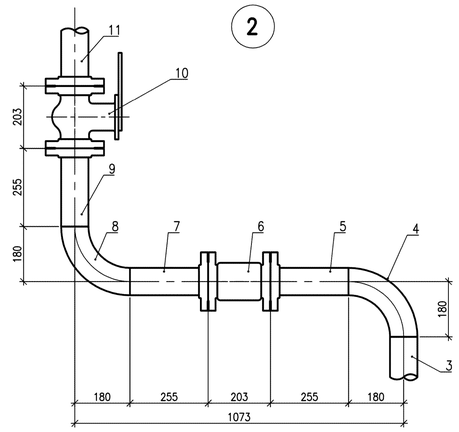

1 Спецификацию блоков трубопроводов смотри листы 8, 9, 10.
2 Ведомость опор трубопроводов смотри лист 11.

1 For pipelines blocks specification see sheets 8, 9, 10.
2 For list of pipelines supports see sheet 11.

РАЗРЕЗ 5–5
SECTION 5–5

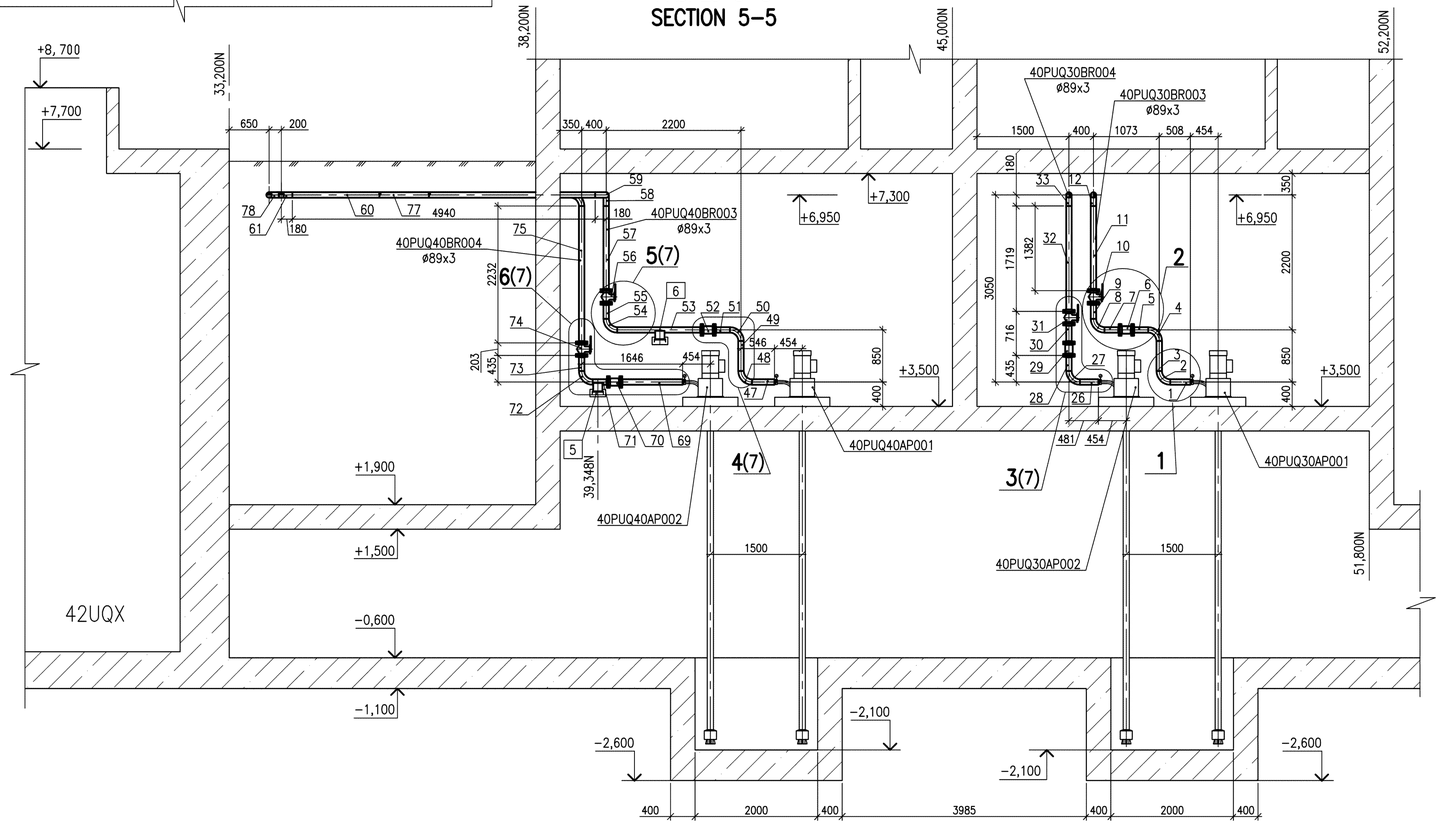

СХЕМА РАСПОЛОЖЕНИЯ
KEY PLAN

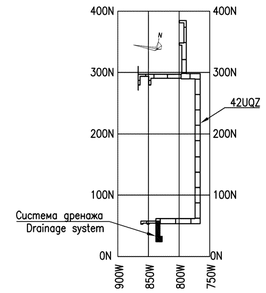

Package Number 3 13 6 63
File: R37 KK34 42UQZ PUQ TW OK WD001_05=0

Данный чертеж не подлежит размножению или передаче другим организациям и лицам без согласия АО "Мособлгидропроект"

This drawing is not to be reproduced or transferred to other organizations or private persons without approval of Joint-stock Company "Institute HYDROPROJECT"

Изм. / Rev.	N уч. / N pot.	Лист / Sheet	N док. / Doc. No	Подпись / Signature	Дата / Date
Утвердил / Approved		Panov			10.18
Н. контр. / Inspector		Alfimova			10.18
Разраб. / Designed		Solodovnikova			10.18

R37.KK34.42UQZ.PUQ.TW.OK.WD001

АЭС "КУДАНКУЛАМ" БЛОК 4
NPP "KUDANKULAM" UNIT 4

42UQZ
Система дренажа сбросных вод. Дренаж воды из туннелей в случае разрыва трубопровода
42UQZ
Drain water removal system. Water removal from tunnels in case of pipeline break

Стадия / Phase	Лист / Sheet	Листов / Sheets
WD	5	

Планы разбивки трубопроводов 40PUQ30(40)BR003, 40PUQ30(40)BR004, 40PUQ30(40)BR005, 40PUQ30(40)BR006 на блоки, разрез 5–5, узел 1, 2
Block division plan of pipelines 40PUQ30(40)BR003, 40PUQ30(40)BR004, 40PUQ30(40)BR005, 40PUQ30(40)BR006, section 5–5, units 1, 2

Joint-stock Company "Institute HYDROPROJECT"
Dedovsk 2018

Format A1

Inv.№ 29742 Date 22.01.19

Orig. arch. №	Date	Replace arch. №
449	22.11.2018	

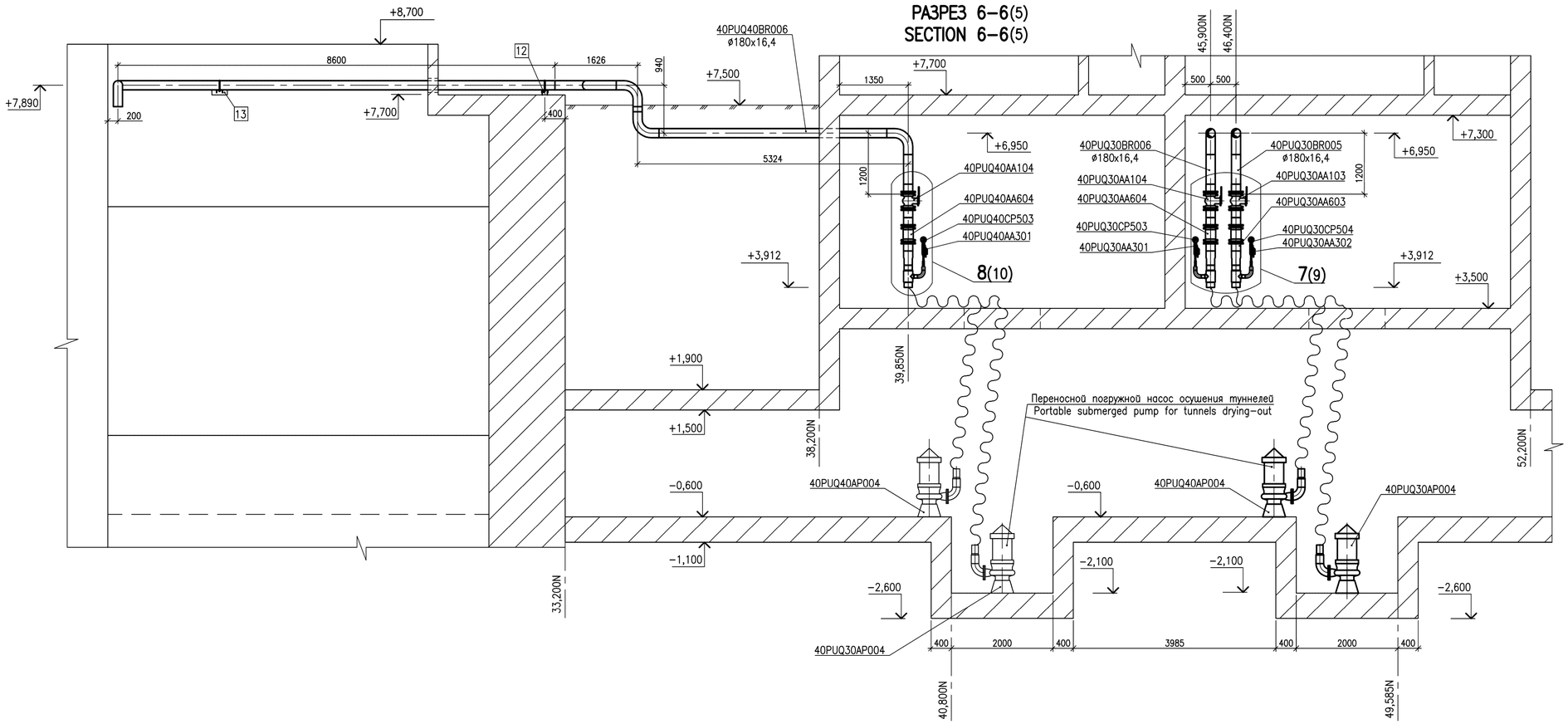

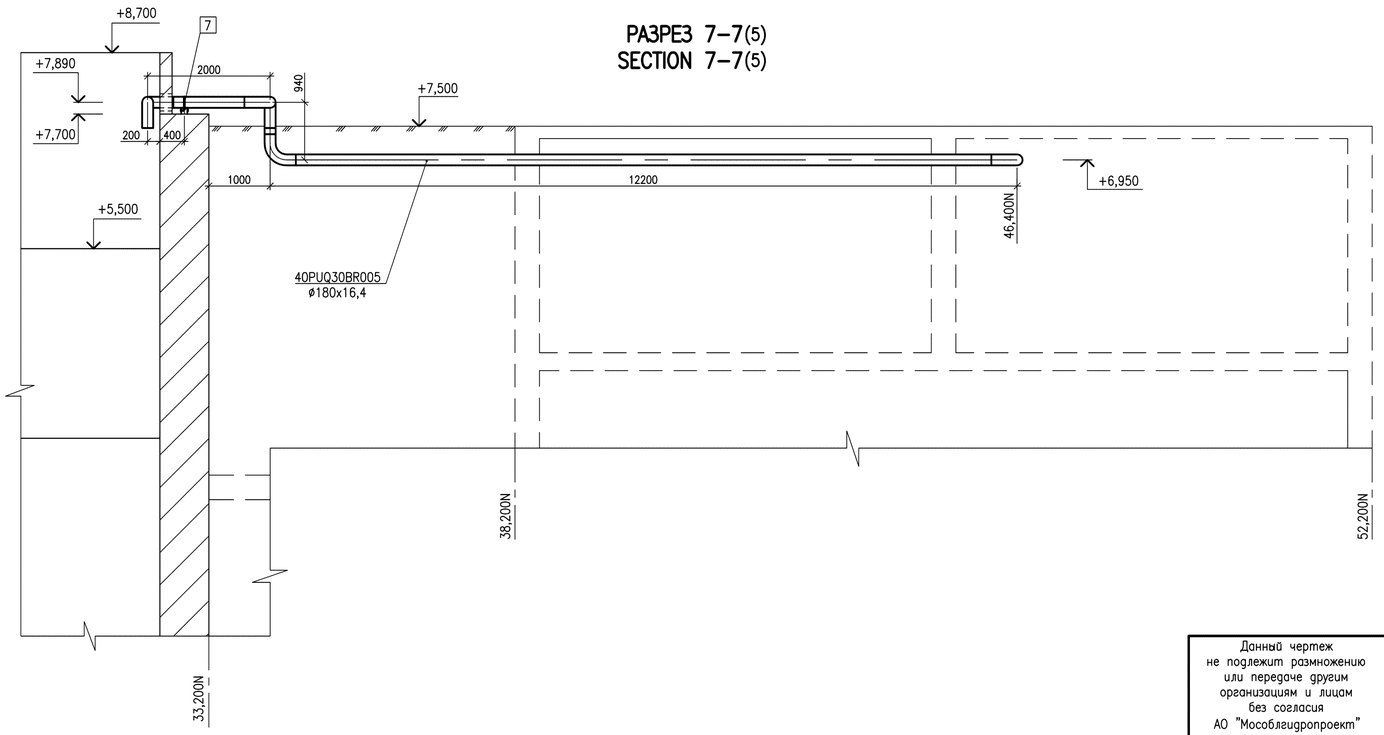

СХЕМА РАСПОЛОЖЕНИЯ
KEY PLAN

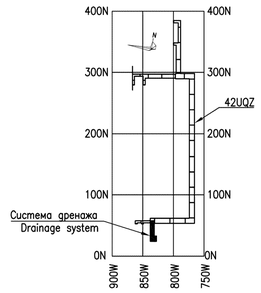

Package Number 3 13 6 63
File: R37 KK34 42UQZ PUQ TW OK WD001_06=0

Данный чертеж не подлежит размножению или передаче другим организациям и лицам без согласия АО "Мособлгидропроект"

This drawing is not to be reproduced or transferred to other organizations or private persons without approval of Joint-stock Company "Institute HYDROPROJECT"

Изм. / Rev.	N уч. / N pat.	Лист / Sheet	N док. / Doc. No	Подпись / Signature	Дата / Date
Утвердил / Approved		Panov			10.18
Н. контр. / Inspector		Alfimova			10.18
Разраб. / Designed		Solodovnikova			10.18

R37.KK34.42UQZ.PUQ.TW.OK.WD001

АЭС "КУДАНКУЛАМ" БЛОК 4
NPP "KUDANKULAM" UNIT

42UQZ
Система дренажа сбросных вод. Дренаж воды из туннелей в случае разрыва трубопровода
42UQZ
Drain water removal system. Water removal from tunnels in case of pipeline break

Разрезы 6–6, 7–7
Sections 6–6, 7–7

Стадия / Phase	Лист / Sheet	Листов / Sheets
WD	6	

Joint-stock Company "Institute HYDROPROJECT"
Dedovsk 2018

Format A1

Inv.Nr 29742 Date 22.01.19

Orig. arch. Nr	Date	Replace arch. Nr
449	22.11.2018	

РАЗРЕЗ 10–10 (5)
SECTION 10–10 (5)

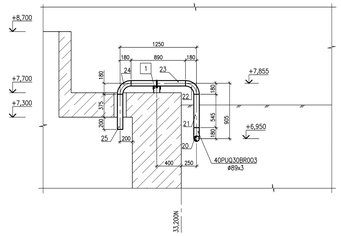

РАЗРЕЗ 11–11 (5)
SECTION 11–11 (5)

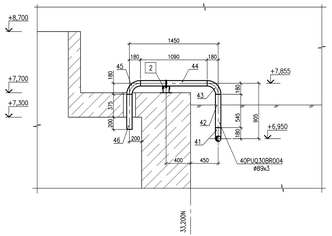

РАЗРЕЗ 8–8 (5)
SECTION 8–8 (5)

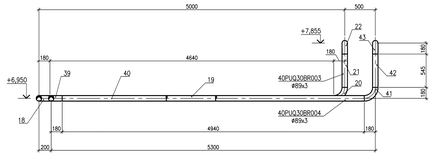

РАЗРЕЗ 15–15(5)
SECTION 15–15(5)

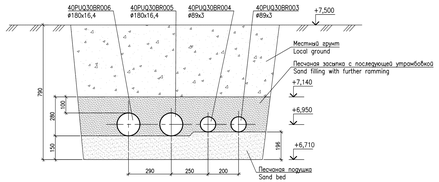

3/5

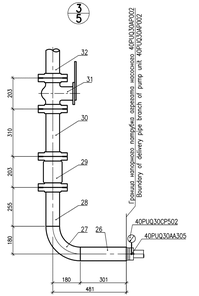

4/5

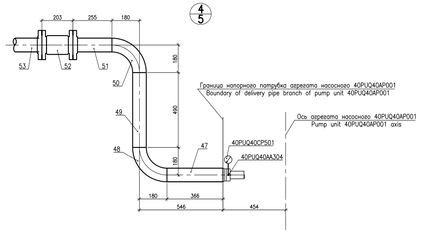

РАЗРЕЗ 12–12 (5)
SECTION 12–12 (5)

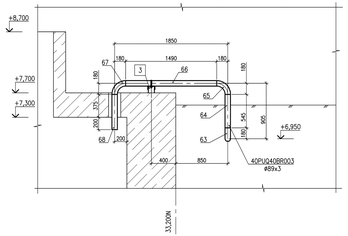

РАЗРЕЗ 13–13 (5)
SECTION 13–13 (5)

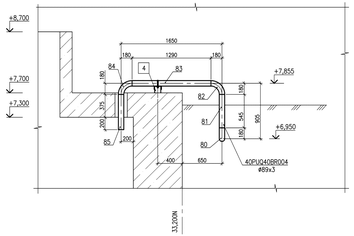

РАЗРЕЗ 9–9(5)
SECTION 9–9(5)

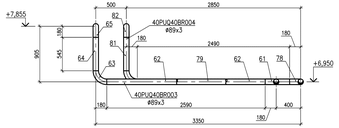

РАЗРЕЗ 16–16(5)
SECTION 16–16(5)

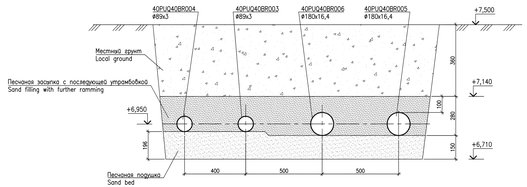

5/5

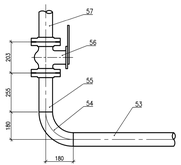

6/5

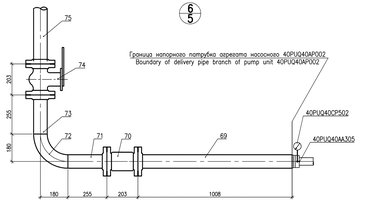

РАЗРЕЗ 18–18(5)
SECTION 18–18(5)

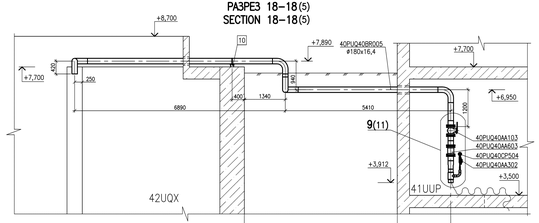

РАЗРЕЗ 14–14(5)
SECTION 14–14(5)

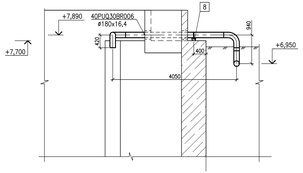

РАЗРЕЗ 17–17(5)
SECTION 17–17(5)

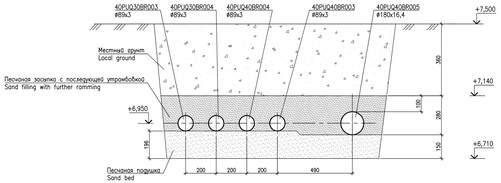

1 Спецификацию блоков трубопроводов смотри листы 8, 9, 10.
2 Ведомость опор трубопроводов смотри лист 11.

1 For pipelines blocks specification see sheets 8, 9, 10.
2 For list of pipelines supports see sheet 11.

СХЕМА РАСПОЛОЖЕНИЯ
KEY PLAN

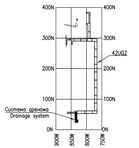

Package Number 3 13 6 63
File: R37 KK34 42UQZ PUQ TW OK WD001_07=0

Данный чертеж не подлежит размножению или передаче другим организациям и лицам без согласия АО "Институт Гидропроект"							R37.KK34.42UQZ.PUQ.TW.OK.WD001		
This drawing is not to be reproduced or transferred to other organizations or private persons without approval of Joint-stock Company "Institute HYDROPROJECT"							АЭС "КУДАНКУЛАМ", БЛОК 4 NPP "KUDANKULAM" UNIT 4		
	Изм. N	Кол.уч.	Лист N	Подпись	Дата	Стадия	Лист	Листов	
	Rev. N	Sheet	Sheet No.	Signature	Date	Phase	Sheet	Sheets	
	Утвердил Approved	Panov			10.18	42UQZ Система дренажа подземных вод. Дренаж воды из тоннелей в случае разрыва трубопровода Drain water removal system. Water removal from tunnels in case of pipeline break	WD	7	
	Гл. контрол. Inspector	Alfimova			10.18	Разрезы 8–8..18–18, узлы 3..6 Sections 8–8..18–18, units 3..6	Joint-Stock Company "Institute HYDROPROJECT" Leningrad 2018		
	Разраб. Designed	Golobevikova			10.18				

Format A2x3

Изм. N докум.	Подпись	Дата	
03.11.2016			
03.11.2016			
03.11.2016			
03.11.2016			

Inv.Nr 29742 Date 22.01.19

СПЕЦИФИКАЦИЯ БЛОКОВ ТРУБОПРОВОДОВ 40PUQ30(40)BR003, 40PUQ30(40)BR004
SPECIFICATION OF PIPELINES BLOCKS 40PUQ30(40)BR003, 40PUQ30(40)BR004

Поз. Pos.	Обозначение Designation	Наименование Name of Block	Кол. Quant	Масса ед., Unit weight, kg	Примечание Note
75	R37.KK.42UQZ.PUQ.TW.OK.WD001 лист 64 Sheet 64	Блок 40PUQ40BR004MR075 Block 40PUQ40BR004MR075	1	10,3	
76	R37.KK.42UQZ.PUQ.TW.OK.WD001 лист 63 Sheet 63	Блок 40PUQ40BR004MR076 Block 40PUQ40BR004MR076	1	1,4	
77	R37.KK.42UQZ.PUQ.TW.OK.WD001 лист 65 Sheet 65	Блок 40PUQ40BR004MR077 Block 40PUQ40BR004MR077	1	17,3	
78	R37.KK.42UQZ.PUQ.TW.OK.WD001 лист 63 Sheet 63	Блок 40PUQ40BR004MR078 Block 40PUQ40BR004MR078	1	1,4	
79	R37.KK.42UQZ.PUQ.TW.OK.WD001 лист 66 Sheet 66	Блок 40PUQ40BR004MR079 Block 40PUQ40BR004MR079	1	9,1	
80	R37.KK.42UQZ.PUQ.TW.OK.WD001 лист 63 Sheet 63	Блок 40PUQ40BR004MR080 Block 40PUQ40BR004MR080	1	1,4	
81	R37.KK.42UQZ.PUQ.TW.OK.WD001 лист 67 Sheet 67	Блок 40PUQ40BR004MR081 Block 40PUQ40BR004MR081	1	2,0	
82	R37.KK.42UQZ.PUQ.TW.OK.WD001 лист 63 Sheet 63	Блок 40PUQ40BR004MR082 Block 40PUQ40BR004MR082	1	1,4	
83	R37.KK.42UQZ.PUQ.TW.OK.WD001 лист 68 Sheet 68	Блок 40PUQ40BR004MR083 Block 40PUQ40BR004MR083	1	4,7	
84	R37.KK.42UQZ.PUQ.TW.OK.WD001 лист 63 Sheet 63	Блок 40PUQ40BR004MR084 Block 40PUQ40BR004MR084	1	1,4	
85	R37.KK.42UQZ.PUQ.TW.OK.WD001 лист 69 Sheet 69	Блок 40PUQ40BR004MR085 Block 40PUQ40BR004MR085	1	2,1	

Поз. Pos.	Обозначение Designation	Наименование Name of Block	Кол. Quant	Масса ед., Unit weight, kg	Примечание Note
51	R37.KK.42UQZ.PUQ.TW.OK.WD001 лист 53 Sheet 53	Блок 40PUQ40BR003MR051 Block 40PUQ40BR003MR051	1	3,1	
52	ASME B16.34-2009	Затвор обратный 80 BN; Класс 150 Check valve 80 BN; Class 150 40PUQ40AA601	1	–	
53	R37.KK.42UQZ.PUQ.TW.OK.WD001 лист 54 Sheet 54	Блок 40PUQ40BR003MR053 Block 40PUQ40BR003MR053	1	7,3	
54	R37.KK.42UQZ.PUQ.TW.OK.WD001 лист 51 Sheet 51	Блок 40PUQ40BR003MR054 Block 40PUQ40BR003MR054	1	1,4	
55	R37.KK.42UQZ.PUQ.TW.OK.WD001 лист 53 Sheet 53	Блок 40PUQ40BR003MR055 Block 40PUQ40BR003MR055	1	3,1	
56	ASME B16.34-2009	Двустворчатый клапан 80 BN; Класс 150 Butterfly valve 80 BN; Class 150 40PUQ40AA101	1	–	
57	R37.KK.42UQZ.PUQ.TW.OK.WD001 лист 54 Sheet 54	Блок 40PUQ40BR003MR057 Block 40PUQ40BR003MR057	1	7,3	
58	R37.KK.42UQZ.PUQ.TW.OK.WD001 лист 51 Sheet 51	Блок 40PUQ40BR003MR058 Block 40PUQ40BR003MR058	1	1,4	
59	R37.KK.42UQZ.PUQ.TW.OK.WD001 лист 55 Sheet 55	Блок 40PUQ40BR003MR059 Block 40PUQ40BR003MR059	1	1,5	
60	R37.KK.42UQZ.PUQ.TW.OK.WD001 лист 56 Sheet 56	Блок 40PUQ40BR003MR060 Block 40PUQ40BR003MR060	1	18,0	
61	R37.KK.42UQZ.PUQ.TW.OK.WD001 лист 51 Sheet 51	Блок 40PUQ40BR003MR061 Block 40PUQ40BR003MR061	1	1,4	
62	R37.KK.42UQZ.PUQ.TW.OK.WD001 лист 57 Sheet 57	Блок 40PUQ40BR003MR062 Block 40PUQ40BR003MR062	1	9,5	
63	R37.KK.42UQZ.PUQ.TW.OK.WD001 лист 51 Sheet 51	Блок 40PUQ40BR003MR063 Block 40PUQ40BR003MR063	1	1,4	
64	R37.KK.42UQZ.PUQ.TW.OK.WD001 лист 58 Sheet 58	Блок 40PUQ40BR003MR064 Block 40PUQ40BR003MR064	1	2,0	
65	R37.KK.42UQZ.PUQ.TW.OK.WD001 лист 51 Sheet 51	Блок 40PUQ40BR003MR065 Block 40PUQ40BR003MR065	1	1,4	
66	R37.KK.42UQZ.PUQ.TW.OK.WD001 лист 59 Sheet 59	Блок 40PUQ40BR003MR066 Block 40PUQ40BR003MR066	1	5,4	
67	R37.KK.42UQZ.PUQ.TW.OK.WD001 лист 51 Sheet 51	Блок 40PUQ40BR003MR067 Block 40PUQ40BR003MR067	1	1,4	
68	R37.KK.42UQZ.PUQ.TW.OK.WD001 лист 60 Sheet 60	Блок 40PUQ40BR003MR068 Block 40PUQ40BR003MR068	1	2,1	
69	R37.KK.42UQZ.PUQ.TW.OK.WD001 лист 61 Sheet 61	Блок 40PUQ40BR004MR069 Block 40PUQ40BR004MR069	1	6,2	
70	ASME B16.34-2009	Затвор обратный 80 BN; Класс 150 Check valve 80 DN; Class 150 40PUQ40AA602	1	–	
71	R37.KK.42UQZ.PUQ.TW.OK.WD001 лист 62 Sheet 62	Блок 40PUQ40BR004MR071 Block 40PUQ40BR004MR071	1	3,1	
72	R37.KK.42UQZ.PUQ.TW.OK.WD001 лист 63 Sheet 63	Блок 40PUQ40BR004MR072 Block 40PUQ40BR004MR072	1	1,4	
73	R37.KK.42UQZ.PUQ.TW.OK.WD001 лист 62 Sheet 62	Блок 40PUQ40BR004MR073 Block 40PUQ40BR004MR073	1	3,1	
74	ASME B16.34-2009	Двустворчатый клапан 80 BN; Класс 150 Butterfly valve 80 BN; Class 150 40PUQ40AA102	1	–	

Поз. Pos.	Обозначение Designation	Наименование Name of Block	Кол. Quant	Масса ед., Unit weight, kg	Примечание Note
26	R37.KK.42UQZ.PUQ.TW.OK.WD001 лист 38 Sheet 38	Блок 40PUQ30BR004MR026 Block 40PUQ30BR004MR026	1	1,5	
27	R37.KK.42UQZ.PUQ.TW.OK.WD001 лист 39 Sheet 39	Блок 40PUQ30BR004MR027 Block 40PUQ30BR004MR027	1	1,4	
28	R37.KK.42UQZ.PUQ.TW.OK.WD001 лист 40 Sheet 40	Блок 40PUQ30BR004MR028 Block 40PUQ30BR004MR028	1	3,1	
29	ASME B16.34-2009	Затвор обратный 80 BN; Класс 150 Check valve 80 BN; Class 150 40PUQ30AA602	1	–	
30	R37.KK.42UQZ.PUQ.TW.OK.WD001 лист 41 Sheet 41	Блок 40PUQ30BR004MR030 Block 40PUQ30BR004MR030	1	5,5	
31	ASME B16.34-2009	Двустворчатый клапан 80 BN; Класс 150 Butterfly valve 80 BN; Class 150 40PUQ30AA102	1	–	
32	R37.KK.42UQZ.PUQ.TW.OK.WD001 лист 42 Sheet 42	Блок 40PUQ30BR004MR032 Block 40PUQ30BR004MR032	1	8,5	
33	R37.KK.42UQZ.PUQ.TW.OK.WD001 лист 39 Sheet 39	Блок 40PUQ30BR004MR033 Block 40PUQ30BR004MR033	1	1,4	
34	R37.KK.42UQZ.PUQ.TW.OK.WD001 лист 43 Sheet 43	Блок 40PUQ30BR004MR034 Block 40PUQ30BR004MR034	1	5,8	
35	R37.KK.42UQZ.PUQ.TW.OK.WD001 лист 39 Sheet 39	Блок 40PUQ30BR004MR035 Block 40PUQ30BR004MR035	1	1,4	
36	R37.KK.42UQZ.PUQ.TW.OK.WD001 лист 44 Sheet 44	Блок 40PUQ30BR004MR036 Block 40PUQ30BR004MR036	1	21,9	
37	R37.KK.42UQZ.PUQ.TW.OK.WD001 лист 44 Sheet 44	Блок 40PUQ30BR004MR037 Block 40PUQ30BR004MR037	1	21,9	
38	R37.KK.42UQZ.PUQ.TW.OK.WD001 лист 45 Sheet 45	Блок 40PUQ30BR004MR038 Block 40PUQ30BR004MR038	1	3,3	
39	R37.KK.42UQZ.PUQ.TW.OK.WD001 лист 39 Sheet 39	Блок 40PUQ30BR004MR039 Block 40PUQ30BR004MR039	1	1,4	
40	R37.KK.42UQZ.PUQ.TW.OK.WD001 лист 46 Sheet 46	Блок 40PUQ30BR004MR040 Block 40PUQ30BR004MR040	1	18,0	
41	R37.KK.42UQZ.PUQ.TW.OK.WD001 лист 39 Sheet 39	Блок 40PUQ30BR004MR041 Block 40PUQ30BR004MR041	1	1,4	
42	R37.KK.42UQZ.PUQ.TW.OK.WD001 лист 47 Sheet 47	Блок 40PUQ30BR004MR042 Block 40PUQ30BR004MR042	1	2,0	
43	R37.KK.42UQZ.PUQ.TW.OK.WD001 лист 39 Sheet 39	Блок 40PUQ30BR004MR043 Block 40PUQ30BR004MR043	1	1,4	
44	R37.KK.42UQZ.PUQ.TW.OK.WD001 лист 48 Sheet 48	Блок 40PUQ30BR004MR044 Block 40PUQ30BR004MR044	1	4,0	
45	R37.KK.42UQZ.PUQ.TW.OK.WD001 лист 39 Sheet 39	Блок 40PUQ30BR004MR045 Block 40PUQ30BR004MR045	1	1,4	
46	R37.KK.42UQZ.PUQ.TW.OK.WD001 лист 49 Sheet 49	Блок 40PUQ30BR004MR046 Block 40PUQ30BR004MR046	1	2,1	
47	R37.KK.42UQZ.PUQ.TW.OK.WD001 лист 50 Sheet 50	Блок 40PUQ40BR003MR047 Block 40PUQ40BR003MR047	1	1,7	
48	R37.KK.42UQZ.PUQ.TW.OK.WD001 лист 51 Sheet 51	Блок 40PUQ40BR003MR048 Block 40PUQ40BR003MR048	1	1,4	
49	R37.KK.42UQZ.PUQ.TW.OK.WD001 лист 52 Sheet 52	Блок 40PUQ40BR003MR049 Block 40PUQ40BR003MR049	1	1,8	
50	R37.KK.42UQZ.PUQ.TW.OK.WD001 лист 51 Sheet 51	Блок 40PUQ40BR003MR050 Block 40PUQ40BR003MR050	1	1,4	

Поз. Pos.	Обозначение Designation	Наименование Name of Block	Кол. Quant	Масса ед., Unit weight, kg	Примечание Note
1	R37.KK.42UQZ.PUQ.TW.OK.WD001 лист 26 Sheet 26	Блок 40PUQ30BR003MR001 Block 40PUQ30BR003MR001	1	1,6	
2	R37.KK.42UQZ.PUQ.TW.OK.WD001 лист 27 Sheet 27	Блок 40PUQ30BR003MR002 Block 40PUQ30BR003MR002	1	1,4	
3	R37.KK.42UQZ.PUQ.TW.OK.WD001 лист 28 Sheet 28	Блок 40PUQ30BR003MR003 Block 40PUQ30BR003MR003	1	1,8	
4	R37.KK.42UQZ.PUQ.TW.OK.WD001 лист 27 Sheet 27	Блок 40PUQ30BR003MR004 Block 40PUQ30BR003MR004	1	1,4	
5	R37.KK.42UQZ.PUQ.TW.OK.WD001 лист 29 Sheet 29	Блок 40PUQ30BR003MR005 Block 40PUQ30BR003MR005	1	3,1	
6	ASME B16.34-2009	Затвор обратный 80 BN; Класс 150 Check valve 80 BN; Class 150 40PUQ30AA601	1	–	
7	R37.KK.42UQZ.PUQ.TW.OK.WD001 лист 29 Sheet 29	Блок 40PUQ30BR003MR007 Block 40PUQ30BR003MR007	1	3,1	
8	R37.KK.42UQZ.PUQ.TW.OK.WD001 лист 27 Sheet 27	Блок 40PUQ30BR003MR008 Block 40PUQ30BR003MR008	1	1,4	
9	R37.KK.42UQZ.PUQ.TW.OK.WD001 лист 29 Sheet 29	Блок 40PUQ30BR003MR009 Block 40PUQ30BR003MR009	1	3,1	
10	ASME B16.34-2009	Двустворчатый клапан 80 BN; Класс 150 Butterfly valve 80 BN; Class 150 40PUQ30AA101	1	–	
11	R37.KK.42UQZ.PUQ.TW.OK.WD001 лист 30 Sheet 30	Блок 40PUQ30BR003MR011 Block 40PUQ30BR003MR011	1	7,2	
12	R37.KK.42UQZ.PUQ.TW.OK.WD001 лист 27 Sheet 27	Блок 40PUQ30BR003MR012 Block 40PUQ30BR003MR012	1	1,4	
13	R37.KK.42UQZ.PUQ.TW.OK.WD001 лист 31 Sheet 31	Блок 40PUQ30BR003MR013 Block 40PUQ30BR003MR013	1	6,5	
14	R37.KK.42UQZ.PUQ.TW.OK.WD001 лист 27 Sheet 27	Блок 40PUQ30BR003MR014 Block 40PUQ30BR003MR014	1	1,4	
15	R37.KK.42UQZ.PUQ.TW.OK.WD001 лист 32 Sheet 32	Блок 40PUQ30BR003MR015 Block 40PUQ30BR003MR015	1	21,6	
16	R37.KK.42UQZ.PUQ.TW.OK.WD001 лист 32 Sheet 32	Блок 40PUQ30BR003MR016 Block 40PUQ30BR003MR016	1	21,6	
17	R37.KK.42UQZ.PUQ.TW.OK.WD001 лист 33 Sheet 33	Блок 40PUQ30BR003MR017 Block 40PUQ30BR003MR017	1	5,4	
18	R37.KK.42UQZ.PUQ.TW.OK.WD001 лист 27 Sheet 27	Блок 40PUQ30BR003MR018 Block 40PUQ30BR003MR018	1	1,4	
19	R37.KK.42UQZ.PUQ.TW.OK.WD001 лист 34 Sheet 34	Блок 40PUQ30BR003MR019 Block 40PUQ30BR003MR019	1	16,9	
20	R37.KK.42UQZ.PUQ.TW.OK.WD001 лист 27 Sheet 27	Блок 40PUQ30BR003MR020 Block 40PUQ30BR003MR020	1	1,4	
21	R37.KK.42UQZ.PUQ.TW.OK.WD001 лист 35 Sheet 35	Блок 40PUQ30BR003MR021 Block 40PUQ30BR003MR021	1	2,0	
22	R37.KK.42UQZ.PUQ.TW.OK.WD001 лист 27 Sheet 27	Блок 40PUQ30BR003MR022 Block 40PUQ30BR003MR022	1	1,4	
23	R37.KK.42UQZ.PUQ.TW.OK.WD001 лист 36 Sheet 36	Блок 40PUQ30BR003MR023 Block 40PUQ30BR003MR023	1	3,3	
24	R37.KK.42UQZ.PUQ.TW.OK.WD001 лист 27 Sheet 27	Блок 40PUQ30BR003MR024 Block 40PUQ30BR003MR024	1	1,4	
25	R37.KK.42UQZ.PUQ.TW.OK.WD001 лист 37 Sheet 37	Блок 40PUQ30BR003MR025 Block 40PUQ30BR003MR025	1	2,1	

Номера позиций данной спецификации соответствуют номерам блоков на листах 5, 6, 7.

Position numbers of this specification coorespond with blocks numbers on Sheet 5, 6, 7.

Package Number 3 13 6 63
File: R37 KK34 42UQZ PUQ TW OK WD001_08=0

Данный чертеж не подлежит размножению или передаче другим организациям и лицам без согласия АО "Мособлгидропроект"

This drawing is not to be reproduced or transferred to other organizations or private persons without approval of Joint-stock Company "Institute HYDROPROJECT"

Изм. Rev.	N уч. N pot.	Лист Sheet	N док. Doc. No	Подпись Signature	Дата Date
Утвердил Approved	Panov				10.18
Н. контр. Inspector	Alfimova				10.18
Разраб. Designed	Solodovnikova				10.18

R37.KK34.42UQZ.PUQ.TW.OK.WD001

АЭС "КУДАНКУЛАМ" БЛОК 4
NPP "KUDANKULAM" UNIT 4

42UQZ
Система дренажа сбросных вод. Дренаж воды из туннелей в случае разрыва трубопровода
42UQZ
Drain water removal system. Water removal from tunnels in case of pipeline break

Спецификация блоков трубопроводов 40PUQ30(40)BR003, 40PUQ30(40)BR004
Specification of pipelines blocks 40PUQ30(40)BR003, 40PUQ30(40)BR004

Стадия Phase	Лист Sheet	Листов Sheets
WD	8	

Joint-stock Company "Institute HYDROPROJECT"
Dedovsk 2018

Format A1

Inv.Nr 29742 Date 22.01.19

Orig. arch. Nr.	Date	Replace arch. Nr.
449	22.11.2018	

ПРИНЦИПИАЛЬНАЯ СХЕМА ТРУБОПРОВОДОВ 40PUQ30BR005, 40PUQ30BR006
SCHEMATIC DIAGRAM OF PIPELINES 40PUQ30BR005, 40PUQ30BR006

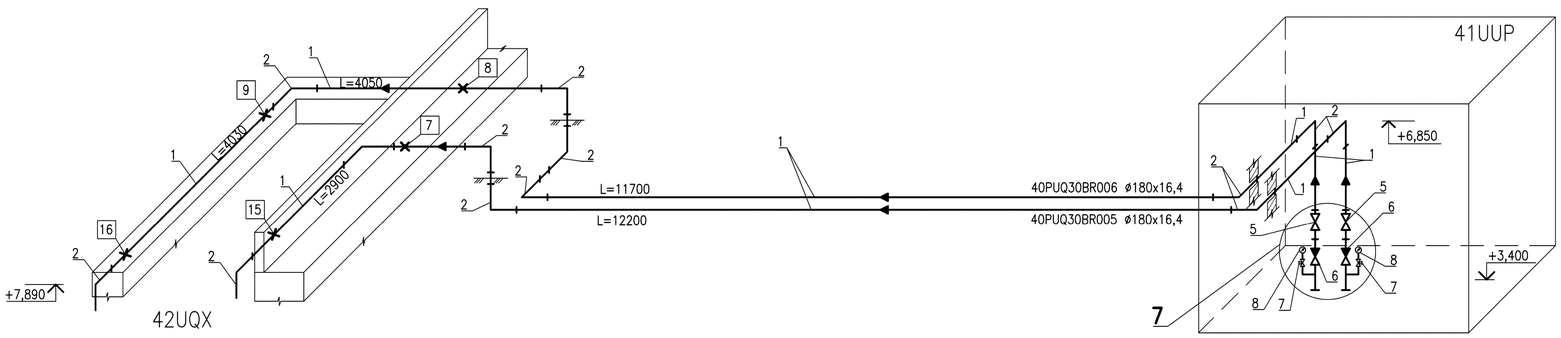

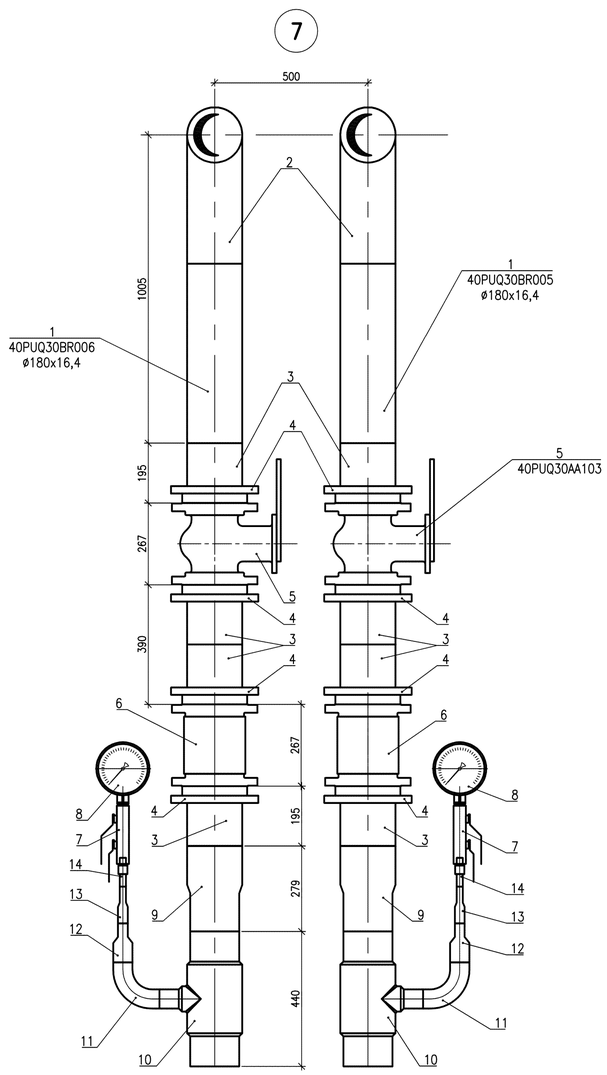

СПЕЦИФИКАЦИЯ ТРУБОПРОВОДОВ 40PUQ30BR005, 40PUQ30BR006
SPECIFICATION OF PIPELINES 40PUQ30BR005, 40PUQ30BR006

Поз. Pos	Обозначение Designation	Наименование Name of Block	Кол. Q-ty	Масса ед., кг Unit weight, kg	Примечание Note
1	ISO 4427-1:2007	Труба 180x16,4 ПЭ100 SDR11 Pipe 180x16,4 PE100 SDR11	40	8,4	метры metres
2	ISO 4427-3:2007	Отвод 90° d180 PE100 SDR11 Pipe-bend 90° d180 PE100 SDR11	13	4,4	шт. pcs.
3		Фланцевый адаптер d180 PE100 SDR11 Flanges adaptor d180 PE100 SDR11	8	–	шт. pcs.
4		Фланец стальной для фланцевого адаптера d180 PE100 SDR11 Flanges steel for flanges adapter d180 PE100 SDR11	8	–	шт. pcs.
5	40PUQ30AA103 40PUQ30AA104	Двустворчатый клапан 150NB Class150 ASME B16.34-2004 Butterfly valve 150NB Class150 ASME B16.34-2004	2	–	шт. pcs.
6	40PUQ30AA603 40PUQ30AA604	Поворотный обратный клапан 150NB Class150 ASME B16.34-2004 Swing check valve 150NB Class150 ASME B16.34-2004	2	–	шт. pcs.
7	40PUQ30AA301 40PUQ30AA302	Игольчатый вентиль 10NB Class150 ASME B16.34-2004 Needle valve 10NB Class150 ASME B16.34-2004	2	–	шт. pcs.
8	40PUQ30AA503 40PUQ30AA506	Мановакуумметр показывающий Combined pressure-and-vacuum gauge indicating	2	–	шт. pcs.
9		Переход редукционный d180xd160 ПЭ100 SDR11 Reducer long d180xd160 PE100 SDR11	2	–	шт. pcs.
10	ISO 4427-3:2007	Тройник 90° d160xd63 ПЭ100 SDR11 Tee 90° d160xd63 PE100 SDR11	2	–	шт. pcs.
11	ISO 4427-3:2007	Отвод 90° d63 ПЭ100 SDR11 Pipe-bend 90° d63 PE100 SDR11	2	–	шт. pcs.
12		Переход редукционный d63xd32 ПЭ100 SDR11 Reducer long d63xd32 PE100 SDR11	2	–	шт. pcs.
13		Переход редукционный d32xd20 ПЭ100 SDR11 Reducer long d32xd20 PE100 SDR11	2	–	шт. pcs.
14		Переход 20-G1/2 ПЭ-сталь с наружной резьбой Transition long 20-G1/2 male-thread-con	2	–	шт. pcs.

СХЕМА РАСПОЛОЖЕНИЯ
KEY PLAN

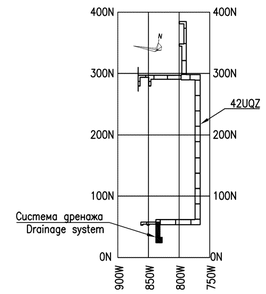

Package Number 3 13 6 63
File: R37 KK34 42UQZ PUQ TW OK WD001_09=0

Данный чертеж не подлежит размножению или передаче другим организациям и лицам без согласия АО "Мособлгидропроект"

This drawing is not to be reproduced or transferred to other organizations or private persons without approval of Joint-stock Company "Institute HYDROPROJECT"

Изм. Rev.	N уч. N pat.	Лист Sheet	N док. Doc. No	Подпись Signature	Дата Date
Утвердил Approved	Panov				10.18
Н. контр. Inspector	Alfimova				10.18
Разраб. Designed	Solodovnikova				10.18

R37.KK34.42UQZ.PUQ.TW.OK.WD001

АЭС "КУДАНКУЛАМ" БЛОК 4
NPP "KUDANKULAM" UNIT 4

42UQZ
Система дренажа сбросных вод. Дренаж воды из туннелей в случае разрыва трубопровода
42UQZ
Drain water removal system. Water removal from tunnels in case of pipeline break

Стадия Phase	Лист Sheet	Листов Sheets
WD	9	

Принципиальная схема трубопроводов 40PUQ30BR005, 40PUQ30BR006, узел 7, спецификация трубопроводов 40PUQ30BR005, 40PUQ30BR006
Schematic diagram of pipelines 40PUQ30BR005, 40PUQ30BR006 unit 7, specification of pipelines 40PUQ30BR005, 40PUQ30BR006

Joint-stock Company
"Institute HYDROPROJECT"
Dedovsk 2018

Format A1

Inv.Nr 29742 Date 22.01.19

Replace arch. Nr	Date	Orig. arch. Nr.
	22.11.2018	449

ПРИНЦИПИАЛЬНАЯ СХЕМА ТРУБОПРОВОДОВ 40PUQ40BR005, 40PUQ40BR006
SCHEMATIC DIAGRAM OF PIPELINES 40PUQ40BR005, 40PUQ40BR006

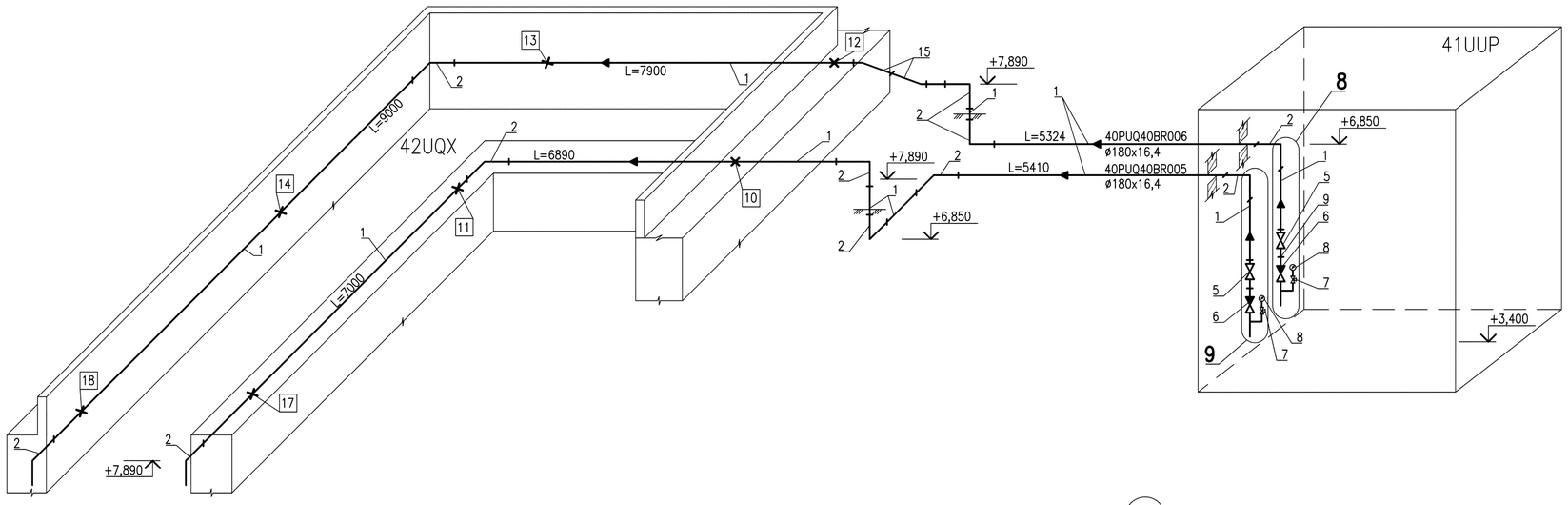

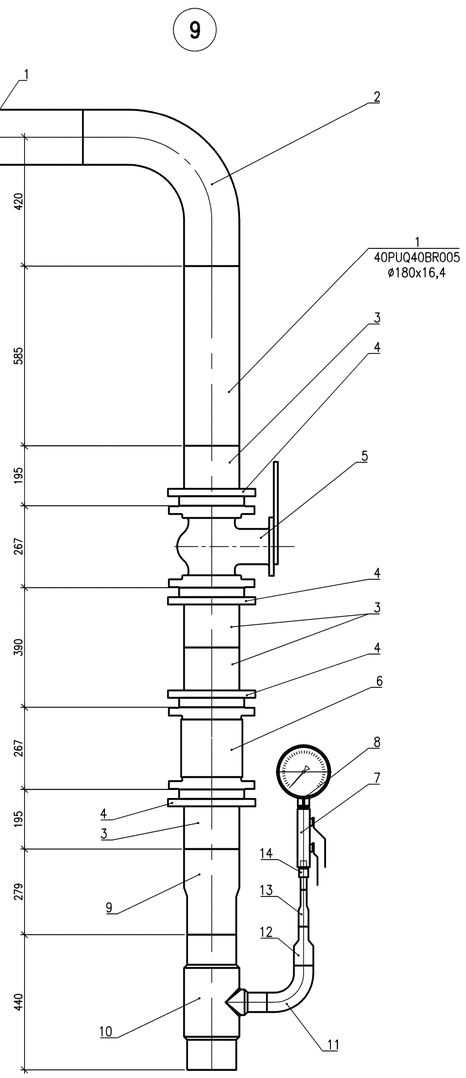

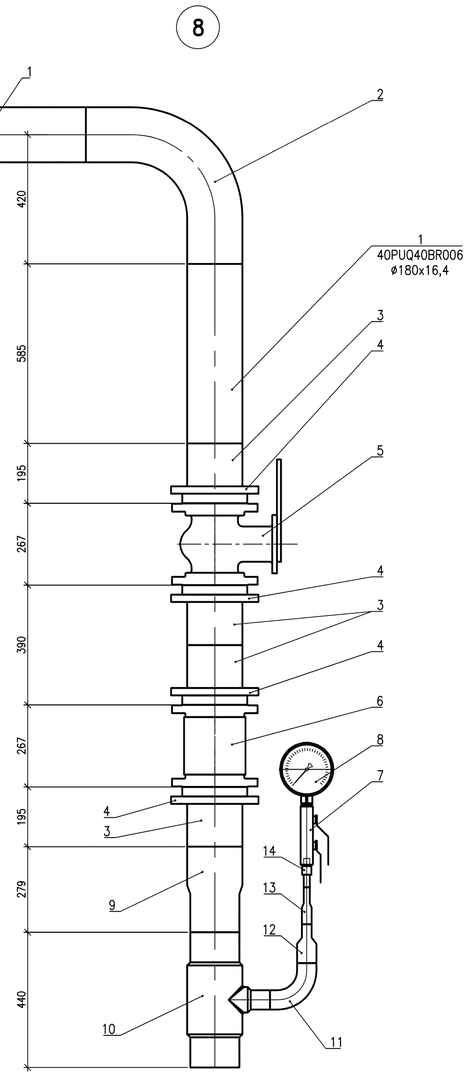

СПЕЦИФИКАЦИЯ ТРУБОПРОВОДОВ 40PUQ40BR005, 40PUQ40BR006
SPECIFICATION OF PIPELINES 40PUQ40BR005, 40PUQ40BR006

Поз. Pos	Обозначение Designation	Наименование Name of Block	Кол. Q-ty	Масса ед., кг Unit weight, kg	Примечание Note
1	ISO 4427-1:2007	Труба 180x16,4 ПЭ100 SDR11 Pipe 180x16,4 PE100 SDR11	45	8,4	метры metres
2	ISO 4427-3:2007	Отвод 90° d180 PE100 SDR11 Pipe-bend 90° d180 PE100 SDR11	11	4,4	шт. pcs.
3		Фланцевый адаптер d180 PE100 SDR11 Flanges adaptor d180 PE100 SDR11	8	–	шт. pcs.
4		Фланец стальной для фланцевого адаптера d180 PE100 SDR11 Flanges steel for flanges adapter d180 PE100 SDR11	8	–	шт. pcs.
5	40PUQ40AA103 40PUQ40AA104	Двустворчатый клапан 150NB Class150 ASME B16.34-2004 Butterfly valve 150NB Class150 ASME B16.34-2004	2	–	шт. pcs.
6	40PUQ40AA603 40PUQ40AA604	Поворотный обратный клапан 150NB Class150 ASME B16.34-2004 Swing check valve 150NB Class150 ASME B16.34-2004	2	–	шт. pcs.
7	40PUQ40AA301 40PUQ40AA302	Игольчатый вентиль 10NB Class150 ASME B16.34-2004 Needle valve 10NB Class150 ASME B16.34-2004	2	–	шт. pcs.
8	40PUQ40AA503 40PUQ40AA506	Мановакумметр показывающий Combined pressure-and-vacuum gauge indicating	2	–	шт. pcs.
9		Переход редукционный d180xd160 ПЭ100 SDR11 Reducer long d180xd160 PE100 SDR11	2	–	шт. pcs.
10	ISO 4427-3:2007	Тройник 90° d160xd63 ПЭ100 SDR11 Tee 90° d160xd63 PE100 SDR11	2	–	шт. pcs.
11	ISO 4427-3:2007	Отвод 90° d63 ПЭ100 SDR11 Pipe-bend 90° d63 PE100 SDR11	2	–	шт. pcs.
12		Переход редукционный d63xd32 ПЭ100 SDR11 Reducer long d63xd32 PE100 SDR11	2	–	шт. pcs.
13		Переход редукционный d32xd20 ПЭ100 SDR11 Reducer long d32xd20 PE100 SDR11	2	–	шт. pcs.
14		Переход 20-G1/2 ПЭ-сталь с наружной резьбой Transition long 20-G1/2 male-thread-con	2	–	шт. pcs.

СХЕМА РАСПОЛОЖЕНИЯ
KEY PLAN

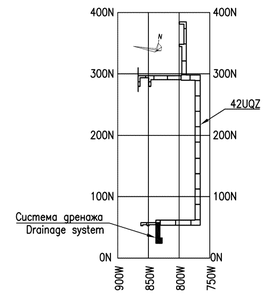

Package Number 3 13 6 63
File: R37 KK34 42UQZ PUQ TW OK WD001_10=0

Данный чертеж не подлежит размножению или передаче другим организациям и лицам без согласия АО "Мособлгидропроект"

This drawing is not to be reproduced or transferred to other organizations or private persons without approval of Joint-stock Company "Institute HYDROPROJECT"

Изм. Rev.	N уч. N pat.	Лист Sheet	N док. Doc. No	Подпись Signature	Дата Date
Утвердил Approved		Panov			10.18
Н. контр. Inspector		Alfimova			10.18
Разраб. Designed		Solodovnikova			10.18

R37.KK34.42UQZ.PUQ.TW.OK.WD001

АЭС "КУДАНКУЛАМ" БЛОК 4
NPP "KUDANKULAM" UNIT

42UQZ
Система дренажа сбросных вод. Дренаж воды из туннелей в случае разрыва трубопровода
42UQZ
Drain water removal system. Water removal from tunnels in case of pipeline break

Принципиальная схема трубопроводов 40PUQ40BR005, 40PUQ40BR006, узлы 8, 9, спецификация трубопроводов 40PUQ40BR005, 40PUQ40BR006
Schematik diagram of pipelines 40PUQ40BR005, 40PUQ40BR006, units 8, 9, specification of pipelines 40PUQ40BR005, 40PUQ40BR006

Стадия Phase	Лист Sheet	Листов Sheets
WD	10	

Joint-stock Company
"Institute HYDROPROJECT"
Dedovsk 2018

Format A1

Inv.Nr 29742 Date 22.01.19

Orig. arch. Nr.	Date	Replace arch. Nr.
449	12.11.2018	

УСТАНОВКА ОПОР ТРУБОПРОВОДОВ
INSTALLATION OF PIPELINES SUPPORTS

ОПОРЫ ТРУБОПРОВОДОВ 40PUQ30(40)BR001
PIPELINES SUPPORTS 40PUQ30(40)BR001

ОПОРЫ 40PUQ30BR001S2, 40PUQ40BR001S5 (НЕПОДВИЖНЫЕ ОПОРЫ)
SUPPORTS 40PUQ30BR001S2, 40PUQ40BR001S5 (FIXED SUPPORTS)

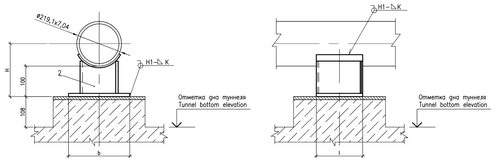

ОПОРЫ ТРУБОПРОВОДОВ 40PUQ30(40)BR003, 40PUQ30(40)BR004
PIPELINES SUPPORTS 40PUQ30(40)BR003, 40PUQ30(40)BR004

ОПОРЫ 40PUQ40BR003S6, 40PUQ40BR004S5 (СКОЛЬЗЯЩИЕ ОПОРЫ)
SUPPORTS 40PUQ40BR003S6, 40PUQ40BR004S5 (SLIDING SUPPORTS)

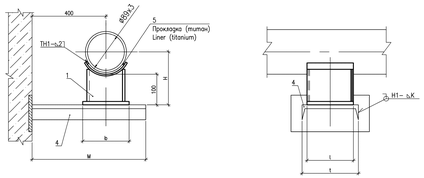

ОПОРЫ ТРУБОПРОВОДОВ 40PUQ30(40)BR005, 40PUQ30(40)BR006
PIPELINES SUPPORTS 40PUQ30(40)BR005, 40PUQ30(40)BR006

ОПОРЫ 40PUQ30BR005S7, 40PUQ30BR006S8; 40PUQ30BR006S9, 40PUQ30BR006S16, 40PUQ40BR005S10, 40PUQ40BR005S11, 40PUQ40BR005S17, 40PUQ40BR006S12 (ТИП 1)
SUPPORTS 40PUQ30BR005S7, 40PUQ30BR006S8; 40PUQ30BR006S9, 40PUQ30BR006S16, 40PUQ40BR005S10, 40PUQ40BR005S11, 40PUQ40BR005S17, 40PUQ40BR006S12 (TYPE 1)

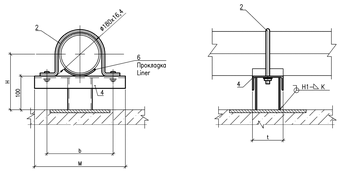

ОПОРЫ 40PUQ30BR001S1, 40PUQ40BR001S3, S4 (СКОЛЬЗЯЩИЕ НАПРАВЛЯЮЩИЕ ОПОРЫ)
SUPPORTS 40PUQ30BR001S1, 40PUQ40BR001S3, S4 (SLIDING GUIDE SUPPORTS)

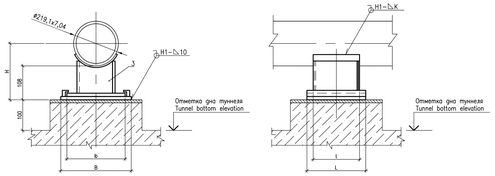

ОПОРЫ 40PUQ30BR003S1, 40PUQ30BR004S2; 40PUQ40BR003S3, 40PUQ40BR004S4 (НЕПОДВИЖНЫЕ ОПОРЫ)
SUPPORTS 40PUQ30BR003S1, 40PUQ30BR004S2; 40PUQ40BR003S3, 40PUQ40BR004S4 (FIXED SUPPORTS)

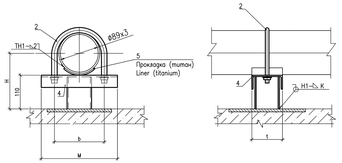

ОПОРЫ 40PUQ30BR005S15, 40PUQ40BR006S13; S14, S18 (ТИП 2)
SUPPORTS 40PUQ30BR005S15, 40PUQ40BR006S13; S14, S18 (TYPE 2)

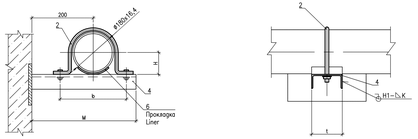

ВЕДОМОСТЬ ОПОР ТРУБОПРОВОДОВ 40PUQ30(40)BR003, 40PUQ30(40)BR004, 40PUQ30(40)BR005, 40PUQ30(40)BR006
LIST OF PIPELINES SUPPORTS 40PUQ30(40)BR003, 40PUQ30(40)BR004, 40PUQ30(40)BR005, 40PUQ30(40)BR006

Номер опоры на плане Support number on the plan	Код по системе KKS Code as per KKS	Наименование Description			Отметка Elevation	
		Технологическая опора Technological support	Кол. Q-ty	Масса ед.кг Unit weight kg	верхняя кромка подрезной стенки или верх подрезной конструкции Upper face of the retaining wall or retaining structure top	Ось трубопровода Pipeline axis
1	40PUQ30BR003S1	Неподвижная опора Fixed support	1	0.49	+7,700	+7,855
2	40PUQ30BR004S2	Неподвижная опора Fixed support	1	0.49	+7,700	+7,855
3	40PUQ40BR003S3	Неподвижная опора Fixed support	1	0.49	+7,700	+7,855
4	40PUQ40BR004S4	Неподвижная опора Fixed support	1	0.49	+7,700	+7,855
5	40PUQ40BR004S5	Скользящая опора Sliding support	1	1.00	+3,755	+3,900
6	40PUQ40BR003S6	Скользящая опора Sliding support	1	1.00	+4,605	+4,750
7	40PUQ30BR005S7	Опора тип 1 Support type 1	1	0.51	+7,700	+7,890
8	40PUQ30BR006S8	Опора тип 1 Support type 1	1	0.51	+7,700	+7,890
9	40PUQ30BR006S9	Опора тип 1 Support type 1	1	0.51	+7,700	+7,890
10	40PUQ40BR005S10	Опора тип 1 Support type 1	1	0.51	+7,700	+7,890
11	40PUQ40BR005S11	Опора тип 1 Support type 1	1	0.51	+7,700	+7,890
12	40PUQ40BR006S12	Опора тип 1 Support type 1	1	0.51	+7,700	+7,890
13	40PUQ40BR006S13	Опора тип 2 Support type 2	1	0.51	+7,700	+7,890
14	40PUQ40BR006S14	Опора тип 2 Support type 2	1	0.51	+7,700	+7,890
15	40PUQ30BR005S15	Опора тип 2 Support type 2	1	0.51	+7,700	+7,890
16	40PUQ30BR006S16	Опора тип 1 Support type 1	1	0.51	+7,700	+7,890
17	40PUQ40BR005S17	Опора тип 1 Support type 1	1	0.51	+7,700	+7,890
18	40PUQ40BR006S18	Опора тип 2 Support type 2	1	0.51	+7,700	+7,890

ТАБЛИЦА ОПОР ТРУБОПРОВОДОВ
TABLE OF PIPELINES SUPPORTS

Диаметр и толщина стенки трубопровода Dxs, мм Diameter and wall thickness of pipeline Dxs, mm	Тип опоры Support type	Размеры, мм Dimensions, mm							Количество Quantity							Масса опоры, кг Support weight, kg	Примечание Note
		Технологическая опора Technological support							Швеллер (поз.4) Channel (item 4)		Скользящая опора (поз.1) Sliding support (item 1)	Неподвижная опора (поз.2) Fixed support (item 2)	Скользящая направляющая опора (поз.3) Sliding guide support (item 3)	Швеллер (поз.4) Channel (item 4)	Прокладка титановая (поз.5) Liner (titanium) (item 5)	Прокладка (поз.6) Liner (item 6)	
		H	b	B	l	L	K	t	M								
89x3	Скользящая опора Sliding support	145,0	100	–	100	–	3	140	460		2	–	–	2	2	–	1,00	
	Неподвижная опора Fixed support	155,0	108	–	–	–	3	100	200		–	4	–	4	4	–	0,49	
180x16,4	Опора тип 1 Support type 1	190,0	216	–	–	–	4	100	300		6	–	–	6	–	6	0,51	
	Опора тип 2 Support type 2	90,0	216	–	–	–	4	100	350		2	–	–	2	–	2	0,51	
219,1x7,04	Неподвижная опора Fixed support	210,0	200	–	200	–	6	–	–		–	2	–	–	–	–	5,91	
	Скользящая направляющая опора Sliding guide support	218,0	190	230	200	400	6	–	–		–	–	3	–	–	–	11,72	

1 План расстановки опор по трассе смотри листы 4, 5.
2 Подпорная конструкция смотри Пакет 3 10 2 8 и чертежи подпорных стен сифонного колодца 42UQX.

1 For layout plan of supports along the route see sheets 4, 5.
2 For retaining structures see Package 3 10 2 8 and drawings of siphon well 42UQX retaining walls.

СХЕМА РАСПОЛОЖЕНИЯ
KEY PLAN

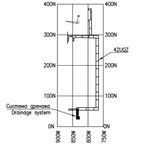

Package Number 3 13 6 63
File: R37 KK34 42UQZ PUQ TW OK WD001_11=0

Данный чертеж не подлежит размножению или передаче другим организациям и лицам без согласия АО "Моссобщепроект" This drawing is not to be reproduced or transferred to other organizations or private persons without approval of Joint-stock Company "Institute HYDROPROJECT"						R37.KK34.42UQZ.PUQ.TW.OK.WD001	
						АЭС "КУДАНКУЛАМ", БЛОК 4 NPP "KUDANKULAM" UNIT 4	
						42UQZ	
Изм. N уч.	Лист N	N док.	Подпись	Дата	Система дренажа сбросных вод. Дренаж воды из туннеля в случае разрыва трубопровода Drain water removal system. Water removal from tunnels in case of pipeline break	Стадия Phase	Лист Sheet	Листов Sheets
Rev. N pal.	Sheet	Doc. No	Signature	Date			
Утвердил Approved	Панов			10.18		WD	11
Гл. контр. Inspector	Altimova			10.18	Установка опор трубопроводов Installation of pipelines supports	Joint-Stock Company "Institute HYDROPROJECT" Ленинград 2018	
Разраб. Designed	Sidorenkova			10.18			

Format A2x4

Inv.№ 29742 Date 22.01.19

Взам. инв. N	Подпись и дата
Инв. N подл.	Подпись и дата

ANNEXURE-V

Sr. No.	QA unit	Test Lab.	Suitable for material testing		
			Physical	Chemical	Micro
1	Noida	M/s R.K. Inspection & Testing Services C-42, Manak Vihar Ext.(Tihar), Subhash Nagar, New Delhi-110018. Phone no. 011 -28122201 Fax No. 011-25122517 E mail-info@rkits.co.in	**1. 0 Physical Testing** 1.1 Tensile testing at room temp. with extensometer 1.2 Impact testing as per ASTM E-23 standard 1.3 Hardness test (Brinell, Vickess, Rockwell, Microhardness up to 1000 grams) 1.4 Bend test, Flattening, Flaring,Proof load, Pull out load, Fillet test.	**2.0 Chemical Testing -** *2.1 Spectrometer analysis	**3.0 Corrosion Test & Micro Examination** 3.1 IGC practice A &E, Micro, Macro, Inclusion rating, Case depth measurement.
2	Noida	M/s SPECTRO E-41, Okhla Indl. Area, Phase-II, New Delhi-110020 Phone no. 011 -40522000 Fax No. 011-40503150 E mail-kd@spectro.in	**1. 0 Physical Testing** 1.1 Tensile testing at room temp. 1.2 Tensile testing at elevated temp. subject to availability of extensometer for 0.2% yield stress measurement. 1.3 Impact testing testing as per ASTM E-23 standard 1.4 Hardness test (Brinell, Vickess, Rockwell, Microhardness up to 1000 grams) 1.5 Bend test, Flattening, Flaring, Proof load, Pull out load, Fillet test.	**2.0 Chemical Testing** 2.1 Wet Analysis 2.2 Spectrometer analysis	**3.0 Corrosion Test & Micro Examination** 3.1 IGC practice A &E, Micro, Macro, Inclusion rating, Case depth measurement. 3.2 Mass of zinc coating 3.3 Paint thickness mesurement

3	Noida	M/s IRC Engg. Services.India (P) Ltd. A-53,Sector-63, Noida, District : G.B.Nagar Phone no. 0120 -3352706 Fax No. 0120-4227940 E mail-	**1. 0 Physical Testing** *****1.1 Tensile testing at room & elevated temp subject to availability of extensometer for 0.2% yield stress measurement. 1.2 Impact testing as per ASTM-E-23 standard 1.3 Hardness test (Brinell, Vickess, Rockwell, Microhardness up to 1000 grams) 1.4 Bend test, Flattening, Flaring, Proof load, Creep test, Stress rupture test, Pull out load, Fillet test.	**2.0 Chemical Testing -** ** 2.1 Spectrometer analysis	**3.0 Corrosion Test & Micro Examination** 3.1 IGC practice A &E, Micro, Macro, Inclusion rating, Case depth measurement.
4	Noida	M/s Inspection & Testing Engg., D-155,Sector-49. Noida, District :G.B.Nagar (UP), Pin-201 307 Phone no. 0120 -2500065 Fax No. 0120-4310675 E mail-	**1. 0 Physical Testing** 1.1 Hardness test (Brinell, Vickess, Rockwell, Microhardness up to 1000 grams) 1.2 Bend test, Flattening	**2.0 Chemical Testing** * 2.1 Spectrometer analysis	**3.0 Corrosion Test & Micro Examination** - Nil

5	Kolkata	M/s Metals& Minerals Testing Laboratories 30/A, Naraasingha Dutta Road, Howrah-711101 Kolkata-26 Phone no. 033 26673185 Fax No. 033 26779422 E mail-	**1. 0 Physical Testing** 1.1 Tensile testing at room temp with extensometer. 1.2 Hardness test (Brinell, Vickess, Rockwell, Microhardness) 1.3 Bend test, Flattening, Flaring, Proof load, Pull out load, Butt & Fillet test.	**2.0 Chemical Testing** * 2.1 Spectrometer analysis	**3.0 Corrosion Test & Micro Examination** 3.1 IGC practice A , Micro, Macro, Inclusion rating, Case depth measurement. 3.2 Mass of zinc coating 3.3 Paint thickness measurement
6	Kolkata	M/s Aglow Quality Control Laboratories Pvt.Ltd. P 47,Kasba Industrial Estate,Kolkatta-107 Phone no. 033 40089633 Fax No. 033 40625177 E mail-	**1.0 Physical Testing** 1.1 For Rubber Testing : Tensile, Hardness, elongation, adhesion, Tension & compression, abrasion, flexing, load deflection, hydro testing, aging.	**2.0 Chemical Testing** 2.1 For Rubber Testing: Rubber polymer content, hydrocarbon Content, neoprene rubber, identification of rubber, resistance to oil, density, analysis of ash. 2.2 Painting related tests(Abrasion, cohesion , adhesion , impact resistance, % elongation, etc.)	**3.0 Corrosion Test & Micro Examination** 3.1 Not Application

7	Kolkata	M/s ID & RL Pvt. Ltd. 33/2A,atish Mukherjee Road, Kolkatta-26 Phone no. 033 24644527 Fax No. 033 24644812 E mail-	**1. 0 Physical Testing** 1.1 Tensile testing at room temp with extensometer. 1.2 Hardness test (Brinell, Vickess, Rockwell, Microhardness up to 1000 grams) 1.3 Bend test, Flattening, Flaring, Proof load, Pull out load, Butt & Fillet test.	**2.0 Chemical Testing** 2.1 Wet Analysis * 2.2 Spectrometer analysis	**3.0 Corrosion Test & Micro Examination** 3.1 IGC practice A &E, Micro, Macro, Inclusion rating, Case depth measurement. 3.2 Mass of zinc coating 3.3 Paint thickness measurement
8	Kolkata	M/s Inspection Survey & Surveillance (India) Pvt. Ltd. 26D/27,Park Lane, Kolkatta-16 Phone no. 033 65454984 Fax No. 033 22297658 E mail- insurveylab@yahoo.com	**1.0 Physical Testing** 1.1 Tensile testing at room temp with extensometer. 1.2 Hardness test (Brinell, Vickess, Rockwell, Microhardness up to 1000 grams) 1.3 Bend test, Flattening, Flaring, Proof load, Pull out load, Butt weld Fillet test.,	**2.0 Chemical Testing** * 2.1 Spectrometer analysis	**3.0 Corrosion Test & Micro Examination** 3.1 IGC practice A &E, Micro, Macro, Inclusion rating, Case depth measurement. 3.2 Mass of zinc coating 3.3 Paint thickness measurement
9	Kolkata	M/s TREATS, 14,Ramnath Pal Road, Kidderpore Kolkata-23 Phone no. 033 24584142 Fax No. 033 2495818 E mail-	**1.0 Physical Testing** 1.1 Tensile testing at room temp with extensometer. 1.2 Hardness test (Brinell, Rockwell, Microhardness up to 1000 grams)	**2.0 Chemical Testing** 2.1 Wet analysis * 2.2 Spectrometer analysis.	**3.0 Corrosion Test & Micro Examination** 3.1 IGC practice A &E, Micro, Macro, Inclusion rating, Case depth measurement.

			1.3 Bend test, Flattening, Flaring, Proof load, Pull out load, Butt weld Fillet test.		3.2 Mass of zinc coating 3.3 Paint thickness measurement
10	Mumbai	M/s. TCR Engg. Services Pvt.Ltd., EL-182,TTC Ind.Area,Mahape, Vashi, Navi-Mumbai - 400 705, (India). Phone no- 27610921/22/23 Fax no.- 2761 2044 Email- sales@tcreng.com	**1.0 Physical Testing** 1.1 Tensile testing at room temp with extensometer. 1.2 Impact test as per ASTM E-23 Standard. 1.3 Hardness test (Brinell, Vickess, Rockwell, Microhardness upto 1000 grams. 1.4 Bend test, Flattening, Flaring, Proof load, Pull out load, Butt weld ,Fillet test, Reverse bend test	**2.0 Chemical Testing** 2.1 Wet analysis * 2.2 Spectrometer analysis	**3.0 Corrosion Test & Micro Examination** 3.1 IGC practice A &E, Micro, Macro, Inclusion rating, Case depth Measurement, ferrite content measurement 3.2 Mass of zinc coating
11	Mumbai	M/s. Subodh Technologiests R-874, M.I.D.C.,Rabale , Navi Mumbai - 400 701. Phone no- 27690817 Fax no.- 27690817 Email- sudhakar@subodhlabs.com	**1.0 Physical Testing** 1.1 Tensile testing at room temp with extensometer. 1.2 Hardness test (Brinell, Vickess, Rockwell, Microhardness up to 1000 grams 1.3 Bend test, Flattening, Flaring, Proof load, Pull out load, Butt weld Fillet test.	**2.0 Chemical Testing** * 2.1 Spectrometer analysis	**3.0 Corrosion Test & Micro Examination** 3.1 IGC practice A &E, Micro, Macro, Inclusion rating, 3.2 Mass of zinc coating
12	Mumbai	M/s Geo Chem Laboratories Pvt Ltd., (Mumbai) 36, Raja Industrial Estate, Purushottam Kheraj Marg, Mulund (W), Mumbai 400 080. Phone no- 67974999 Fax no.- 67974616 Email-	**1.0 Physical Testing** 1.1 Tensile testing at room temp with extensometer. 1.2 Hardness test (Brinell, Vickess, Rockwell) 1.3 Bend Test, Flattening, Flarring,	**2.0 Chemical Testing** 2.1 Wet analysis * 2.2 Spectrometer analysis	**3.0 Corrosion Test & Micro Examination** 3.1 IGC practice A &E, Case depth Measurement, Micro, Macro 3.2 Mass of zinc coating

		laboratory@geochemgroup.com	Proof Load for nuts		
13	Mumbai	M/s. Jewel Metallochem Laboratory Pvt. Ltd., A-12, Ghatkopar Indl. Estate, Ghatkopar (W), Mumbai 400 086. Phone no. 25007745 Fax No. 25001263 E mail- info@jewelmetallochem.com jewelmetal@rediffmail.com www.jewelmetallochem.com	**1.0 Physical Testing** 1.1 Tensile testing at room temp with extensometer. 1.2 Impact test as per ASTM E-23 Standard. 1.3 Hardness test (Brinell, Vickers, Rockwell, Microhardness 50 to 1000 grams. 1.4 Bend test, Flattening, Flaring, Proof load, Pull out load, Butt weld Fillet test, Reverse bend test	**2.0 Chemical Testing** 2.1 Wet analysis * 2.2 Spectrometer analysis	**3.0 Corrosion Test & Micro Examination** 3.1 IGC practice A &E, Micro, Macro, Inclusion rating, Case depth measurement. 3.2 Mass of zinc coating
14	Mumbai	M/s. Metallurgical Services, Mehta House, Ashok Silk Mills Lane, L.B.S. Marg, Ghatkopar (W), Mumbai 400 086. Phone no. 25000240 Fax No. 25001740 E mail- info@metallurgicallab.com metallurgicalservices@gmail.com www.metallurgicallab.com	**1.0 Physical Testing** 1.1 Tensile testing at room & elevated temp with extensometer. 1.2 Impact test as per ASTM E-23 Standard. 1.3 Hardness test (Brinell, Vickess, Rockwell, Microhardness 50 to 1000 gm 1.4 Bend test, Flattening, Flaring, Proof load, Pull out load, Butt weld Fillet test, Creep test, Fracture toughness and stress rupture test, Reverse bend test , Fatigue test	**2.0 Chemical Testing** 2.1 Wet analysis * 2.2 Spectrometer analysis	**3.0 Corrosion Test & Micro Examination** 3.1 IGC practice A &E, Micro, Macro, Inclusion rating, Case depth measurement, ferrite content measurement 3.2 Mass of zinc coating

15-A	Mumbai	M/s Elca Laboratories Plot No.A-444, Road No.37, (Off Road No.28) Near Rubber Products, Wagle Estate, Thane – 400 094. Phone no. 25824499 Fax No. 25825394 E mail-info@elcalabs.com www.elcalabs.com	**1.0 Physical Testing** 1.1 Tensile testing at room temp with extensometer. 1.2 Hardness test (Brinell, Vickess, Rockwell, Microhardness 50 to 1000 grams. 1.3 Bend test, Flattening, Flaring, Proof load for nuts, Pull out load, Fillet test.	**2.0 Chemical Testing** 2.1 Wet analysis * 2.2 Spectrometer analysis	**3.0 Corrosion Test & Micro Examination** 3.1 IGC practice A & E, Micro, Macro 3.2 Mass of zinc coating
15-B	Mumbai	Elca Laboratories, Unit-II, W-361, TTC Industrial Area, MIDC, Rabale, Navi Mumbi- 400701 25824499 25822047 25823142 25833410 Fax No. 25825394 E mail- rabale@elcalabs.com	**1.0 Physical Testing** 1.1 Tensile testing at room temp with extensometer 1.2 Impact testing 1.3 Hardness test (Brinell, Vickess, Rockwell, Microhardness. 1.4 Bend test, Flattening, Flaring, Proof load for nuts, Pull out load, Fillet test.	**2.0 Chemical Testing** 2.1 Spectrometer analysis	**3.0 Corrosion Test & Micro Examination** 3.1 IGC practice A
16	Mumbai	M/s Metal Analysis & Services Pvt.Ltd., 219, Bussa Udyog Bhavan, Tokersey Jivraj Road, Sewree (W), Mumbai 400 015. Phone no. 24131160 Fax No. 66624514 E mail- hmj@bom7.vsnl.net.in	1**.0 Physical Testing** 1.1 Tensile testing at room temp with extensometer. 1.2 Hardness test (Brinell, Vickess, Rockwell, Microhardness upto 1000 grams. 1.3 Bend test, Flattening, Flaring, Proof load, Pull out load, Butt weld Fillet test, Reverse bend test	**2.0 Chemical Testing** 2.1 Wet analysis * 2.2 Spectrometer analysis	**3.0 Corrosion Test & Micro Examination** 3.1 IGC practice A &E, Micro, Macro 3.2 Mass of zinc coating
17	Mumbai	M/s Offshore Testing &	**1.0 Physical Testing**	**2.0 Chemical Testing**	**3.0 Corrosion Test & Micro**

		Inspection Services (India) Pvt .Ltd., W-147, M.I.D.C., Pawane, Thane Belapur Road, Navi-Mumbai 400 710. Tel. 022 4144414 /15/16/17 Fax : 022 27633982 /25560401	1.1 Tensile testing at room temp with extensometer. 1.2 Impact test as per ASTM E-23 Standard. 1.3 Hardness test (Brinell, Vickess, Rockwell) 1.4 Bend test, Flattening, Flaring, Proof load, Pull out load, Butt weld Fillet test	2.1 Wet analysis * 2.2 Spectrometer analysis	**Examination** 3.1 IGC practice A & E
18	Mumbai	M/s Reliable Testing Services, Unit Number 59, 2nd floor, Bindal Industrial Estate,Kurla Andheri Road, Sakinaka, Mumbai 400 072. Phone no. 28516406 Fax No. 42154942 E mail- reliable1983@rediffmail.com www.reliabletestingservices.com	**1.0 Physical Testing** 1.1 Tensile testing at room temp with extensometer.	**2.0 Chemical Testing** 2.1 Spectrometer analysis	**3.0 Corrosion Test & Micro Examination** 3.1 Mass of zinc coating 3.2 IGC practice A &E

19	Mumbai	M/s. Soham Analytical Services, A-121/101, B33/35, Amargian Industrial Estate, Pokhran Road No.1, Khopoli, Thane (W), Maharashtra. Tel. 022-25471297/93/94 Fax : 022 25471295 Email : lab_support@sohmanalytical.com	**1.0 Physical Testing** 1.1 Tensile testing at room temp with extensometer. 1.2 Impact test as per ASTM E-23 Standard. 1.3 Hardness test (Brinell, Vickess, Rockwell, Microhardness 1.4 Bend test, Flattening, Flaring, Proof load, Pull out load, Butt weld, Fillet test, Reverse bend test, Through thickness tensile test, Nick break test (pipes), Compression test	**2.0 Chemical Testing** 2.1 Wet analysis 2.2 Spectrometer analysis	**3.0 Corrosion Test & Micro Examination** 3.1 IGC practice A & E, Micro, Macro, Inclusion rating, Case depth Measurement, Ferrite content 3.2 Mass of zinc coating 3.3 Hydrogen Induced corrosion test, Ferrite Chloride pitting & crevice corrosion test
20	Chennai	M/s Chennai Mettex Lab P.Ltd. Jyothi Complex, No.83, M .K.N.Road, Guindy , Chennai – 600 032 Ph. 044-22323163, 42179490/91 Fax :044-43534270 email address test@mettexlab.com	**1. 0 Physical Testing** 1.1 Tensile testing at room temp with and without extensometer. ** 1.2 Impact test as per ASTM E-23 Standard. 1.3 Hardness test (Brinell, Vickess, Rockwell) and Microhardness 1.4 Bend test, Flattening, Flaring, Proof load, Pull out load, Butt weld Fillet test, Reverse bend test 1.5 Tensile testing of rubber material	**2.0 Chemical Testing** * 2.1 Spectrometer analysis 2.2 Polymer identification (rubber)	**3.0 Corrosion Test & Micro Examination** 3.1 Micro, Macro, Inclusion rating, Case depth measurement. 3.2 Mass of zinc coating

21	Chennai	M/s Micro Lab, SP.101, 2 nd Main Road , Ambattur Industrial Estate, Chennai – 600 058 Ph. 044-26242525, Fax :044-26244872 E mail: cre@micrilabchennai.com	**1. 0 Physical Testing** 1.1 Tensile testing at room temp with and without extensometer. 1.2 Tensile testing at elevated temp with and without extensometer. 1.3 Impact test as per ASTM E-23 Standard. 1.4 Hardness test (Brinell, Vickess, Rockwell) and Microhardness 1.5 Bend test, Flattening, Flaring, Proof load, Pull out load, Reverse bend test	**2.0 Chemical Testing** 2.1 Spectrometer analysis (OES)	**3.0 Corrosion Test & Micro Examination** 3.1 IGC practice A &E, Micro, Macro, Inclusion rating, Case depth measurement. 3.2 Mass of zinc coating
22	Chennai	M/s. Commando Lab No. 3A 5th South Street, Avarampalayam, Coimbatore 641 006 Phone : 0422 2560907	**1. 0 Physical Testing** 1.1 Tensile testing at room temp with extensometer as applicable. 1.2 Hardness test (Brinell,, Vickers, Rockwell) 1.3 Bend test, Reverse bend test, Flattening test, Flaring test, Proof load test, Pull out load test.		

23	Bangaluru	M/s Geological and Metallurgical Laboratories (GML) 105X, 3rd Main, 3rd Cross, II Stage, Yeshwanthpur Indl. Suburb, Goraguntepalya, BANGALORE - 560 022 Ph. 2347 1065 , 2347 2020 Fax 2347 1011	**1. 0 Physical Testing** 1.1 Tensile testing at room temp with extensometer. 1.2 Hardness test (Brinell, Vickess, Rockwell, Microhardness upto 1000 grams. 1.3 Bend test, Flattening, Flaring , Proof load, Pull out load, Butt weld Fillet test, Reverse bend test	**2.0 Chemical Testing** 2.1 Wet analysis * 2.2 Spectrometer analysis.	**3.0 Corrosion Test & Micro Examination** 3.1 IGC practice A &E, Micro, Macro, Inclusion rating, Case depth measurement. 3.2 Mass of zinc coating 3.3 Paint thickness measurement
24	Baroda	M/s Met Heat Engineers Pvt. Ltd, Vadodara 857/2,G.I.D.C. Industrial Estate, Makarpura , Vadodara -390 010 Ph. (0265)2643655, 3046493, 6548715-16 Fax email address: info@metheat.com	**1. 0 Physical Testing** 1.1 Tensile testing at room temp with extensometer. 1.2 Impact test as per ASTM E-23 Standard. 1.3 Hardness test (Brinell, Vickess, Rockwell, Microhardness upto 1000 grams. 1.4 Bend test, Flattening, Flaring, Proof load, Pull out load, Butt weld Fillet test, Reverse bend test	**2.0 Chemical Testing** 2.1 Wet analysis * 2.2 Spectrometer analysis	**3.0 Corrosion Test & Micro Examination** 3.1 IGC practice A &E, Micro, Macro, Inclusion rating, Case depth measurement. 3.2 Mass of zinc coating 3.3 Paint thickness measurement

25	Baroda	M/s TCR Advanced Engineering Pvt. Ltd. , 36/2/9, First Floor, Abhishek Complex, GIDC Estate, Makarpura, Vadodara-390 010 Ph. 0265 2657233, 2634375 Fax 0265 2643024 email address	**1. 0 Physical Testing** 1.1 Tensile testing at room temp with extensometer. 1.2 Impact test as per ASTM E-23 Standard. 1.3 Hardness test (Brinell, Vickess, Rockwell, Microhardness upto 1000 grams. 1.4 Bend test, Flattening, Flaring, Proof load, Pull out load, Butt weld Fillet test, Reverse bend test	**2.0 Chemical Testing** 2.1 Wet analysis * 2.2 Spectrometer analysis	**3.0 Corrosion Test & Micro Examination** 3.1 IGC practice A &E, Micro, Macro, Inclusion rating, Case depth measurement. 3.2 Mass of zinc coating 3.3 Paint thickness measurement
26	Pune	M/s Elca Quality Systems & Calibration Pvt.Ltd. S.Np. 232/2, Pune Nasik Road, Bhosari, Pune 411 039. Phone no.-020 27129194, 27125024 e-mail- qc@elcalabs.com	**1. 0 Physical Testing** 1.1 Cold/Hot tensile 1.2 Impact test as per ASTM E-23 Standard. 1.3 Hardness/Bend/Flattening etc.	**2.0 Chemical Testing** 2.1 Spectro 2.2 Wet	**3.0 Corrosion Test & Micro Examination** 3.1 IGC 3.2 Micro/Macro 3.3 Coating thickness etc.
27	Pune	M/s Perfect Laboratory Services, 58,59/13,14/Unit 2 DII Blolck, MIDC, Chinchwad, Pune 411 019. Phone no.-020 27458150, 27454716 e-mail- trust_perfectlab@yahoo.com	**1. 0 Physical Testing** 1.1 Room temperature Tensile testing 1.2 Impact test as per ASTM E-23 Standard. 1.3 Hardness/Bend/Flattening etc.	**2.0 Chemical Testing** 2.1 Spectro 2.2 Wet	**3.0 Corrosion Test & Micro Examination** 3.1 IGC 3.2 Micro/Macro 3.3 Coating thickness etc.

28	Hyderabad	M/s. Jyothi Spectro Analysis (P) Ltd., A-30, APIE, Balanagar, Hyderabad 500 037. Tel. No. 040- 23771193 23771194 23773676 23778042 E-mail : sdsingh@jyothispectro.com	**1.0 Physical Testing :** 1.1 Hardness test (Brinell, Vickers, Rockwell) 1.2 Bend test, Flattening, Flaring, Pull out load, Proof load test and Fillet test.	**2.0 Chemical testing** 2.1 Spectrometer analysis for low carbon, alloy steels, ASS and aluminium bronze.	**3.0 Corrosion Test & Micro Examination** 3.1 IGC Practice A&E, Micro, macro, Inclusion rating. 3.2 Mass of zinc coating.
29	Hyderabad	M/s. Lucid Laboratories (P) Ltd., B-1/A, TIE, Phase II, B alanagar, Hyderabad 500 037. Te. No. 040-23720678 23720680 23720681 23720406 E-mail : info@lucidlabsindia.com lucidlabs@rediffmail.com	**1.0 Physical Testing :** 1.1 Hardness test (Vickers, Rockwell) 1.2 Bend test, Flattening and Fillet test.	**2.0 Chemical testing** 2.1 Spectrometer analysis for low carbon, alloy steels and ASS	**3.0 Corrosion Test & Micro Examination** 3.1 Mass of zinc coating.

Sl.No.	Laboratory Name	Work
1	Bureau Vertias, Chennai	Chemical, NDT & Mechanical
2	National Test House, Chennai	Chemical, NDT, electrical & mechanical
3	ICOMAT, Perungudi, Chennai-96	Chemical, NDT & mechanical
4	Geecy Vincotte India Pvt.Ltd, Mumbai	NDTesting services
5	Microlab, Chennai	Mechanical and chemical related testing
6	Omega Inspection and analytical laboratory, Chennai	Mechanical, metallurgical and chemical testing as per ASTM/ IS in line with NABL accreditation
7	Chennai Mettex Lab Pvt. Ltd, Chennai	Mechanical, metallurgical and chemical testing as per ASTM/ IS in line with NABL accreditation
8	i) Structwel Designer & Consultants Pvt. Ltd, Bangalore.	Testing: Chemical, Mechanical & NDE
	ii) Geological and Metallurgical Laboratories.	Testing: Chemical & Mechanical

Note: NABL certificate validity to be ensured for the LABs as on date as applicable.

न्यूक्लियर पावर कॉर्पोरेशन ऑफ इंडिया लिमिटेड

(भारत सरकार का उद्यम)

NUCLEAR POWER CORPORATION OF INDIA LTD.

(A Government of India Enterprise)

गुणवत्ता आश्वासन निदेशालय

Directorate of Quality Assurance

नाभिकीय ऊर्जा भवन, अणुशक्तिनगर, मुंबई-400 094

Nabhikiya Urja Bhavan, Anushaktinagar, Mumbai - 400 094.

Corporate Identification No. U40104MH1987GOI149458

आर.के. गुप्ता R.K. Gupta
अधिशासी निदेशक (गु.आ.) Executive Director (QA)

Phone: 022- 25995030/25558487
Fax.No.: 022-25565354
e-mail: rk_gupta@npcil.co.in

सं. No. एनपीसीआईएलNPCIL/02500/क्यूएडीQAD/ईडीED(क्यूएQA)/एमM/2019/1160 December 17, 2019

विषय : वेधी पदार्थों के अनुमोदित ब्रांड की सूची।

Sub: List of approved brands of penetrant materials

17-12-2019 की स्थिति में एनपीसीआईएल के उपयोग हेतु वेधी पदार्थों के अनुमोदित ब्रांड की सूची इसके साथ संलग्न है। यह अनुमोदन हमारी प्रक्रिया संख्या QAD/NDT-PROC-PT-05 (तरल वेधी परीक्षण के लिए उपयोग में आने वाले रसायन परिवार के अनुमोदन हेतु प्रक्रिया) कें अुनसार आवश्यकताओं के अनुरूप प्रदान किया जाता है।

The list of approved brands of penetrant materials for use on NPCIL jobs as on 17-12-2019 is enclosed herewith. The approvals are granted in conformance to the requirements as per our procedure no. QAD/NDT-PROC-PT-05 (Procedure for approval of Family of Chemicals used for Liquid Penetrant Examination).

राकेश कुमार गुप्ता
17.12.19

(आर.के. गुप्ता R. K. Gupta)
अधिशासी निदेशक (गु.आ.) Executive Director (QA)

न्यूक्लियर पावर कॉर्पोरेशन ऑफ इंडिया लिमिटेड

(भारत सरकार का उद्यम)

NUCLEAR POWER CORPORATION OF INDIA LTD.

(A Government of India Enterprise)

गुणवत्ता आश्वासन निदेशालय

Directorate of Quality Assurance

नाभिकीय ऊर्जा भवन, अणुशक्तिनगर, मुंबई-400 094

Nabhikiya Urja Bhavan, Anushaktinagar, Mumbai - 400 094.

LIST OF APPROVED PENETRANT TESTING MATERIAL

(As on 17-12-2019)

Sr. No.	Manufacturers	Brand name	Description	Valid up to
1.	DYEGLO PVT. LTD, PUNE	RP-81	Red Coloured Solvent Removable Penetrant	DEC2023
2.	DYEGLO PVT. LTD, PUNE	RP-90	Red Coloured Water Washable Penetrant	DEC2023
3.	DYEGLO PVT. LTD, PUNE	CL-01	Solvent Cleaner	DEC2023
4.	DYEGLO PVT. LTD, PUNE	RD-01	Solvent Base Developer suitable for RP-81 & RP-90	DEC2023
5.	DYEGLO PVT. LTD, PUNE	FP-01	Fluorescent Solvent Removable Penetrant	DEC2023
6.	DYEGLO PVT. LTD, PUNE	WD-01	Solvent Base Developer suitable for FP-01.	DEC2023
7.	FERROCHEM NDT SYSTEM PVT. LTD. PUNE	FC-911, FC-811 FC-711	Solvent Removable (Visible)	FEB2022
8.	FERROCHEM NDT SYSTEM PVT. LTD. PUNE	FC-931, FC-811	Water Washable (Visible)	FEB2022
9.	FERROCHEM NDT SYSTEM PVT. LTD. PUNE	FC-941, FC-821	Water washable (Fluorescent)	FEB2022
10.	FERROCHEM NDT SYSTEM PVT. LTD. PUNE	FC-921, FC-821, FC-721	Solvent removable (Fluorescent)	FEB2022
11.	MAGNAFLUX ITW INDIA PVT.LTD.SECUNDERABAD	SKL-SP 1	Red Coloured Solvent Removable Penetrant	JUL2024
12.	MAGNAFLUX ITW INDIA PVT.LTD.SECUNDERABAD	SKC-1	Solvent Cleaner	JUL2024
13.	MAGNAFLUX ITW INDIA PVT.LTD.SECUNDERABAD	SKD-S2	Solvent Base Developer	JUL2024
14.	MAGNAFLUX ITW INDIA PVT.LTD.SECUNDERABAD	SKL-WP2	Red Coloured Water Washable Penetrant	JUL2024
15.	MAGNAFLUX ITW INDIA PVT.LTD.SECUNDERABAD	SKL-SP2	Red Coloured Solvent Removable Penetrant.	JUL2024
16.	MR CHEMIE INDIA PVT. LTD., HYDERABAD.	MR(R) 62	Solvent Removable Penetrant–Red	JAN2021
17.	MR CHEMIE INDIA PVT. LTD., HYDERABAD.	MR(R) 68 NF	Solvent Removable and Water Washable Penetrant–Red	JAN2021
18.	MR CHEMIE INDIA PVT. LTD., HYDERABAD.	MR(R) 67	Solvent Removable and Water Washable Penetrant–Red	JAN2021
19.	MR CHEMIE INDIA PVT. LTD., HYDERABAD.	MR(R) 672 F	Solvent Removable and Water Washable Penetrant–Fluorescent	JAN2021
20.	MR CHEMIE INDIA PVT. LTD., HYDERABAD.	MR(R) 85	Solvent Remover suitable for MR(R) 68NF, MR(R) 67, MR(R) 672F and MR(R) 62.	JAN2021
21.	MR CHEMIE INDIA PVT. LTD., HYDERABAD.	MR(R) 70	Non-Aqueous Developer suitable for MR(R) 68 NF, MR(R) 67 and MR(R) 672F	JAN2021

Sr. No.	Manufacturers	Brand name	Description	Valid up to
22.	MR CHEMIE INDIA PVT. LTD., HYDERABAD.	MR(R) 70 I	Non-Aqueous Developer suitable for MR(R) 62.	JAN2021
23.	P-MET HIGH TECH CO. PVT. LTD., VADODARA	PP-15/PP-15B	Red Coloured Solvent Removable Penetrant	SEPT2021
24.	P-MET HIGH TECH CO. PVT. LTD., VADODARA	PP-19/PP-19B	Red Coloured Water Washable Penetrant	SEPT2021
25.	P-MET HIGH TECH CO. PVT. LTD., VADODARA	PC-21/PC-21B	Solvent Cleaner	SEPT2021
26.	P-MET HIGH TECH CO. PVT. LTD., VADODARA	PD-31/PD-31B	Solvent Base Developer	SEPT2021
27.	P-MET HIGH TECH CO. PVT. LTD., VADODARA	PP-110/ PP110B	Red Coloured Solvent Removable Penetrant	SEPT2021
28.	P-MET HIGH TECH CO. PVT. LTD., VADODARA	PC 120/ PC-120B	Solvent Cleaner	SEPT2021
29.	P-MET HIGH TECH CO. PVT. LTD., VADODARA	PD 130 /PD-130B	Solvent Base Developer	SEPT2021
30.	P-MET HIGH TECH CO. PVT. LTD., VADODARA	FPS46/FPS46B	Solvent Removable Fluorescent Penetrant	SEPT2021
31.	P-MET HIGH TECH CO. PVT. LTD., VADODARA	FPS49/FPS49B	Water Washable Fluorescent Penetrant	SEPT2021
32.	PRADEEP METAL TREATMENT CHEMICALS PVT. LTD., THANE	Flaw Guide Penetrant (NP Grade)	Red Coloured Solvent Removable Penetrant.	OCT2024
33.	PRADEEP METAL TREATMENT CHEMICALS PVT. LTD., THANE	Flaw Guide Cleaner (NP Grade)	Solvent Cleaner	OCT2024
34.	PRADEEP METAL TREATMENT CHEMICALS PVT. LTD., THANE	Flaw Guide Developer (NP Grade)	Solvent Base Developer	OCT2024
35.	PRADEEP METAL TREATMENT CHEMICALS PVT. LTD., THANE	Flaw Guide Red Dye Penetrant-W	Water Washable Dye Penetrant	OCT2024

Note:-

1. Halogen content in Penetrant, Cleaner and Developer is 25ppm (max) and Sulphur content is 500ppm (max). However when using penetrant materials for Austenitic Stainless Steel, Titanium, Nickel base or other high temperature alloys, Halogen and Sulphur content shall not exceed 25ppm. Manufacture has to mention for each batch, the Sulphur and Halogen content in the label of each container for selection of Penetrant materials for the stated application.
2. Developer is to be used in Aerosol can to get the best results.

17/12/19

(Anoop Singh)
ACE & Head QA (M-6)

Through: Shri A.K. Singh, AD (QA- Opns. & Group-1) 17/12/19 17/12/19

Executive Director (QA) 17.12.19

न्यूक्लियर पावर कॉर्पोरेशन ऑफ इंडिया लिमिटेड

(भारत सरकार का उद्यम)

NUCLEAR POWER CORPORATION OF INDIA LTD.

(A Government of India Enterprise)

गुणवत्ता आश्वासन निदेशालय

Directorate of Quality Assurance

नाभिकीय ऊर्जा भवन, अणुशक्तिनगर, मुंबई-400 094

Nabhikiya Urja Bhavan, Anushaktinagar, Mumbai - 400 094.

Corporate Identification No. U40104MH1987GOI149458

आर.के. गुप्ता R.K. Gupta
अधिशासी निदेशक (गु.आ.) Executive Director (QA)

Phone: 022- 25995030/25558487
Fax.No.: 022-25565354
e-mail: rk_gupta@npcil.co.in

सं.No. एनपीसीआईएलNPCIL/02500/क्यूएडी QAD/एमM/2019/161 दिनांक Date: December 17, 2019

विषय : वेल्डिंग कंज्यूमेबल्स के अनुमोदित ब्रांड की सूची।

Sub: List of approved brands of welding consumables

17/12/2019 की स्थिति में एनपीसीआईएल कार्यों के उपयोग हेतु वेल्डिंग कंज्यूमेबल्स के अनुमोदित ब्रांडों की सूची इसके साथ संलग्न है:

The lists of approved brands of welding consumables for use on NPCIL jobs as on 17/12/2019 are enclosed herewith.

1) अनुमोदित कार्बन स्टील एवं निम्न एलॉय स्टील वेल्डिंग इलेक्ट्रोड्स की सूची (2 शीट)
   List of Approved Carbon Steel & Low Alloy Steel Welding Electrodes (2 Sheets).
2) अनुमोदित स्टेनलेस स्टील एवं अन्य निकिल एलॉय इलेक्ट्रोड्स की सूची (2 शीट)
   List of Approved Stainless Steel & other Ni Alloy Electrodes (2 Sheets).
3) वायर के अनुमोदित ब्रांड एवं वायर फ्लक्स संयोजन की सूची (1 शीट)
   List of Approved Brands of Wire and Wire Flux Combination (1 Sheet).

वेल्डिंग कंज्यूमेबल्स (क्यूएडी/प्रापण/वेल्डिंग कंज्यूमेबल्स/002 संशो.: 2) के अनुमोदन के लिए प्रक्रिया में एवं एएसएमई खंड II भाग C के अद्यतन संस्करण में निर्धारित आवश्यकताओं के अनुसार अनुमोदन प्रदान किया जाता है। तथापि, विशेष मामलों में जहाँ कहीं भी बैच क्वालिफिकेशन अपेक्षित होगा, अलग से निष्पादित किया जाएगा।

The approvals are granted in conformance to the requirements stipulated in Procedure for approval of Welding Consumables (QAD/Proc/Welding Consumables/002 Rev:2) and latest edition of ASME Section II Part C. However, batch qualification wherever called for in specific cases, will have to be carried out separately.

राकेश कुमार गुप्ता 17.12.19

(आर.के. गुप्ता R.K. Gupta)

अधिशासी निदेशक (गु.आ.) Executive Director (QA)

न्यूक्लियर पावर कॉर्पोरेशन ऑफ इंडिया लिमिटेड

(भारत सरकार का उद्यम)

NUCLEAR POWER CORPORATION OF INDIA LTD.

(A Government of India Enterprise)

गुणवत्ता आश्वासन निदेशालय

Directorate of Quality Assurance

नाभिकीय ऊर्जा भवन, अणुशक्तिनगर, मुंबई-400 094

Nabhikiya Urja Bhavan, Anushaktinagar, Mumbai - 400 094.

1) LIST OF APPROVED CARBON STEEL & LOW ALLOY STEEL WELDING ELECTRODES

(2 pages)

As on 17-12-2019

Sr. No.	Manufacturers	Brand name	AWS No.	Valid up to
1.	ADOR WELDING LTD., SILVASSA	SUPABASE X PLUS	E7018	FEB2024
2.	ADOR WELDING LTD., SILVASSA	MOLYTEN	E7018-A1	APR2020
3.	ADOR WELDING LTD., SILVASSA	CHROMOTEN	E8018 B2	APR2020
4.	ADOR WELDING LTD., SILVASSA	CHROMOTEN-C	E9018 B3	APR2020
5.	ADOR WELDING LTD., SILVASSA	TENALLOY Z PLUS	E7018-1	JUN2022
6.	D&H INDIA LTD., INDORE	SUPER -CR-1	E8018 B2	DEC2020
7.	D&H INDIA LTD., INDORE	SUPER -CR-2	E9018 B3	DEC2020
8.	D&H INDIA LTD., INDORE	SUPER –LH (SPL)	E7018-1 (DCEP Only)	FEB2021
9.	D&H INDIA LTD., INDORE	STANDARD	E6013	FEB2021
10.	D&H INDIA LTD., INDORE	SUPER LH	E7018 (DCEP Only)	FEB2021
11.	D&H SECHERON, INDORE	MEDIO	E6013	JUN2020
12.	D&H SECHERON, INDORE	EXOBEL	E6013	JUN2020
13.	D&H SECHERON, INDORE	SUPERTHERME	E7018	JUN2020
14.	D&H SECHERON, INDORE	MOLYTHERME	E7018-A1	JUN2022
15.	D&H SECHERON, INDORE	SUPERTHERME(SPL)	E7018-1	NOV2023
16.	HONAVAR ELECTRODES, THANE	REGULAR S	E6013	JAN2020
17.	HONAVAR ELECTRODES, THANE	ULTIMATE - 18	E7018	JAN2020
18.	HONAVAR ELECTRODES, THANE	ULTIMATE – 18 SPL	E7018-1	JAN2020
19.	MAILAM INDIA LTD., PUDUCHERRY	MAILARC -13R	E6013	SEP2020
20.	MAILAM INDIA LTD., PUDUCHERRY	MAILARC -18	E7018	SEP2020
21.	MAILAM INDIA LTD., PUDUCHERRY	MAILARC -18 PLUS	E7018-1	SEP2020
22.	MAILAM INDIA LTD., PUDUCHERRY	MAILARC -1 CR	E8018-B2	JUN2024
23.	MAILAM INDIA LTD., PUDUCHERRY	MAILARC -2 CR	E9018-B3	JUN2024
24.	RAJ KESARI ELECTRODES, UDAIPUR	SUPERLET 18	E7018	AUG2022
25.	RAJ KESARI ELECTRODES, UDAIPUR	SUPERLET 18 (SPL.)	E7018-1	AUG2022
26.	RAJ KESARI ELECTRODES, UDAIPUR	RAJCORD 13S	E6013	AUG2022
27.	RAJRATNA ELECTRODES, AHEMEDABAD	RATNA 7018 SPL.	E7018-1	MAR2020
28.	RAJRATNA ELECTRODES, AHEMEDABAD	RATNA 7018	E7018	NOV2023
29.	ROYAL ARC ELECTRODES LTD, VASAI	ROYAL THERM SPL.	E7018-1	SEP2021
30.	ROYAL ARC ELECTRODES LTD, VASAI	ROYAL CHROM 1	E8018-B2	FEB2023
31.	ROYAL ARC ELECTRODES LTD, VASAI	ROYAL CHROM 2	E9018-B3	FEB2023
32.	ROYAL ARC ELECTRODES LTD, VASAI	ROYAL THERM MOLY	E7018-A1	MAR2023
33.	ROYAL ARC ELECTRODES LTD, VASAI	ROYAL THERM	E7018	DEC2023
34.	ROYAL ARC ELECTRODES LTD, VASAI	ROYAL S	E6013	DEC2023
35.	SUPERON SCHWEISSTECHNIK INDIA LTD. DELHI	GARANT MO	E7018-A1	SEP2020
36.	SUPERON SCHWEISSTECHNIK INDIA LTD., DELHI	SUPER CROMO 1B	E8018-B2	DEC2020

Sr. No.	Manufacturers	Brand name	AWS No.	Valid up to
37.	SUPERON SCHWEISSTECHNIK INDIA LTD., DELHI	SUPER CROMO 2B	E9018-B3	DEC2020
38.	VIJEY ELECTRODES & WIRES PVT. LTD., CHENNAI	VJ 6013 X	E6013	SEP2020
39.	VIJEY ELECTRODES & WIRES PVT. LTD., CHENNAI	VJ 7018	E7018	SEP2020
40.	VIJEY ELECTRODES & WIRES PVT. LTD., CHENNAI	VJ 7018 - 1	E7018-1	SEP2020
41.	WELD FAST ELECTRODES, NAGPUR	WELDFAST LH 18	E-7018	MAR2020
42.	WELD FAST ELECTRODES, NAGPUR	WELDFAST LH-18-1	E-7018-1	MAR2020
43.	WELD FAST ELECTRODES, NAGPUR	WELDFAST CROMO 0500	E7018-A1	FEB2023
44.	WELD FAST ELECTRODES, NAGPUR	WELDFAST CROMO 1500	E8018-B2	FEB2023
45.	WELD FAST ELECTRODES, NAGPUR	WELDFAST CROMO 2251	E9018-B3	FEB2023

The approvals are granted in conformance to the requirements stipulated in latest edition of ASME Section II Part C. However, batch qualification wherever called for in specific cases, will have to be carried out separately.

17/12/19

(Anoop Singh)
ACE & Head QA (M-6)

Through: Shri A.K. Singh, AD (QA- Opns. & Group-1) 17/12/19 17/12/1

Executive Director (QA) 17.12.19

न्यूक्लियर पावर कॉर्पोरेशन ऑफ इंडिया लिमिटेड
(भारत सरकार का उद्यम)
NUCLEAR POWER CORPORATION OF INDIA LTD.
(A Government of India Enterprise)
गुणवत्ता आश्वासन निदेशालय
Directorate of Quality Assurance
नाभिकीय ऊर्जा भवन, अणुशक्तिनगर, मुंबई-400 094
Nabhikiya Urja Bhavan, Anushaktinagar, Mumbai - 400 094.

2) LIST OF APPROVED STAINLESS STEEL & OTHER NI ALLOY ELECTRODES

(2 Pages)

As on 17-12-2019

Sr. No.	MANUFACTURERS	BRAND NAME	AWS No.	VALID UPTO
1.	ADOR WELDING LTD., SILVASSA	BETANOX-DL	E 309L-16	SEP2020
2.	ADOR WELDING LTD., SILVASSA	SUPERINOX-2C	E 316L-16	SEP2020
3.	ADOR WELDING LTD., SILVASSA	SUPERINOX-1C	E 308L-16	SEP2020
4.	D&H INDIA LTD., INDORE	SV-308L	E 308L-15	DEC2022
5.	D&H INDIA LTD., INDORE	SV-309L	E 309L-15	DEC2022
6.	D&H INDIA LTD., INDORE	CROMALLOY-B	E 308L-16	DEC2022
7.	D&H INDIA LTD., INDORE	CROMALLOY 309L	E 309L-16	DEC2020
8.	ADOR FONTECH, BENGALURU	LH 511	E Ni Cu7	OCT2020
9.	ADOR FONTECH, BENGALURU	LH 521	E Ni Cr Fe 3	OCT2020
10.	D&H SECHERON, INDORE	CRONITHERME 25/12	E 309-16	JUN2022
11.	D&H SECHERON, INDORE	RUTOX-D	E 316L-16	JUN2022
12.	D&H SECHERON, INDORE	BATOX-B	E 308L-15	JUN2020
13.	D&H SECHERON, INDORE	RUTOX-B	E 308L-16	JUN2020
14.	D&H SECHERON, INDORE	D&H 309L	E 309L-16	NOV2023
15.	D&H SECHERON, INDORE	D&H 1250	E NiCu-7	JAN2021
16.	D&H SECHERON, INDORE	D&H 1212NS	E NiCr Fe-3	JAN2021
17.	D&H SECHERON, INDORE	RUTOX-A	E 308-16	NOV2023
18.	D&H SECHERON, INDORE	RUTOX-A St	E 347-16	NOV2023
19.	D&H SECHERON, INDORE	RUTOX-Mo	E 316-16	NOV2023
20.	HONAVAR ELECTRODES, THANE	SILVER SHINE 308L-15	E 308L-15	FEB2024
21.	HONAVAR ELECTRODES, THANE	SILVER SHINE 316L	E 316L-16	FEB2024
22.	RAJRATNA ELECTRODES, AHEMEDABAD	RATNA 308L	E 308L-16	MAR2020
23.	RAJRATNA ELECTRODES, AHEMEDABAD	RATNA 316 L	E 316L-16	MAR2020
24.	MAILAM INDIA LTD., PUDUCHERRY	MAILEX-A	E 308-16	JUN2024
25.	MAILAM INDIA LTD., PUDUCHERRY	MAILEX-AL	E 308L-16	JUN2024
26.	MAILAM INDIA LTD., PUDUCHERRY	MAILEX-AL-15	E 308L-15	JUN2024
27.	MAILAM INDIA LTD., PUDUCHERRY	MAILEX-25/12	E 309-16	JUN2024
28.	MAILAM INDIA LTD., PUDUCHERRY	MAILEX-25/12-L	E 309L-16	JUN2024
29.	MAILAM INDIA LTD., PUDUCHERRY	MAILEX-25/12-Mo	E 309 Mo-16	JUN2024
30.	MAILAM INDIA LTD., PUDUCHERRY	MAILEX Mo	E 316-16	JUN2024
31.	MAILAM INDIA LTD., PUDUCHERRY	MAILEX MoL	E 316L-16	JUN2024
32.	ROYAL ARC ELECTRODES, VASAI,	ROYAL 1C	E 308L-16	OCT2024
33.	ROYAL ARC ELECTRODES, VASAI,	ROYAL 2C	E 316L-16	OCT2024

Sr. No.	MANUFACTURERS	BRAND NAME	AWS No.	VALID UPTO
34.	ROYAL ARC ELECTRODES, VASAI,	ROYAL-D2L	E 309L-16	OCT2024
35.	WELD FAST ELECTRODES, NAGPUR	WELDFAST 308L	E 308L-16	JAN2021
36.	WELD FAST ELECTRODES, NAGPUR	WELDFAST 316L	E 316L-16	JAN2021
37.	WELD FAST ELECTRODES, NAGPUR	WELDFAST 309L	E 309L-16	JAN2021
38.	WELD FAST ELECTRODES, NAGPUR	WELDFAST 309MoL	E 309LMo-16	JAN2021

The approvals are granted in conformance to the requirements stipulated in latest edition of ASME Section II Part C. However, batch qualification wherever called for in specific cases, will have to be carried out separately.

17/12/19

(Anoop Singh)
ACE & Head QA (M-6)

Through: Shri A.K. Singh, AD (QA- Opns. & Group-1) 17/12/19 17/12/1

Executive Director (QA) 17.12.19

न्यूक्लियर पावर कॉर्पोरेशन ऑफ इंडिया लिमिटेड
(भारत सरकार का उद्यम)
NUCLEAR POWER CORPORATION OF INDIA LTD.
(A Government of India Enterprise)
गुणवत्ता आश्वासन निदेशालय
Directorate of Quality Assurance
नाभिकीय ऊर्जा भवन, अणुशक्तिनगर, मुंबई-400 094
Nabhikiya Urja Bhavan, Anushaktinagar, Mumbai - 400 094.

3) LIST OF APPROVED BRANDS OF WIRE AND WIRE FLUX COMBINATION

(1 Page)

As on 17-12-2019

Sr. No.	MANUFACTURERS	BRAND NAME	AWS No.	VALID UPTO
1.	ADOR FONTECH, BENGALURU	TIG 120	ER 308L	OCT2024
2.	ADOR FONTECH, BENGALURU	TIG 121	ER 316L	OCT2024
3.	ADOR FONTECH, BENGALURU	TIG 123	ER 309L	OCT2024
4.	ADOR FONTECH, BENGALURU	TIG 120S	ER 347	OCT2024
5.	ADOR FONTECH, BENGALURU	TIG 521	ER NiCr3	OCT2024
6.	ADOR WELDING LTD., SILVASSA	TIGFIL 70S-2	ER 70S-2	FEB2022
7.	ADOR WELDING LTD., SILVASSA	TIGINOX-308L	ER 308L	SEP2020
8.	ADOR WELDING LTD., SILVASSA	TIGINOX-309L	ER309L	SEP2020
9.	ADOR WELDING LTD., SILVASSA	AUTOMIG 70-S6	ER 70S-6	DEC2023
10.	ADOR WELDING LTD., SILVASSA	AUTOMELT-B71 AUTOMELT-EH 14 WIRE	F7A2-EH14	FEB2024
11.	D&H INDIA LTD., INDORE	SUPER TIG 308L	ER 308L	DEC2020
12.	D&H INDIA LTD., INDORE	SUPER TIG 309L	ER 309L	DEC2020
13.	D&H SECHERON, INDORE	FILLER WIRE FW 308L	ER 308L	FEB2021
14.	D&H SECHERON, INDORE	FILLER WIRE FW 309L	ER 309L	FEB2021
15.	D&H SECHERON, INDORE	F 70 S2	ER 70S-2	JUN2022
16.	RAJRATNA ELECTRODES, AHEMEDABAD	RAAJTIG ER 308L	ER 308L	MAR2020
17.	RAJRATNA ELECTRODES, AHEMEDABAD	RAAJTIG ER 316L	ER 316L	MAR2020
18.	VENUS WIRES, KHOPOLI	VENUS 308L	ER 308L	SEP2021
19.	VENUS WIRES, KHOPOLI	VENUS 316L	ER 309L	SEP2021
20.	VENUS WIRES, KHOPOLI	VENUS 309L	ER 316L	SEP2021
21.	VENUS WIRES, KHOPOLI	VENUS 347	ER 347	SEP2021
22.	WELD FAST ELECTRODES, NAGPUR	TIG FAST-3	ER 70S-2	JAN2021
23.	WELD FAST ELECTRODES, NAGPUR	MIG FAST-1	ER 70S-6	JAN2021

The approvals are granted in conformance to the requirements stipulated in latest edition of ASME Section II Part C. However, batch qualification wherever called for in specific cases, will have to be carried out separately.

17/12/19
(Anoop Singh)
ACE & Head QA (M-6)

Through: Shri A.K. Singh, AD (QA- Opns. & Group-1) 17/12/19 17/12/19

Executive Director (QA) 17.12.19