FIRST ANGLE PROJECTION

(ALL DIMENSIONS ARE IN mm)

DRG. NO. XXXXXXX SH. OF 1

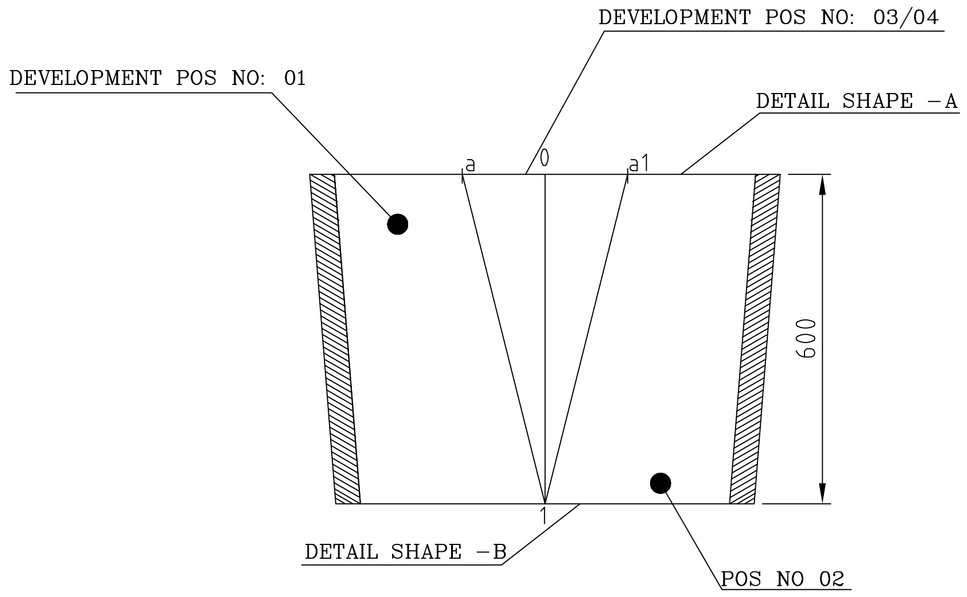

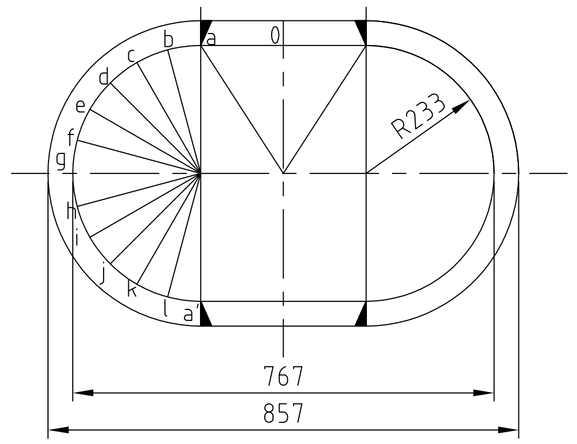

SHAPE–A

Segments	Segment Length
a-b-c-d-e-f-g-h-i-j-k-l-a'	61
1-2-3-4-5-6-7-8-9-10-11-12-1'	88

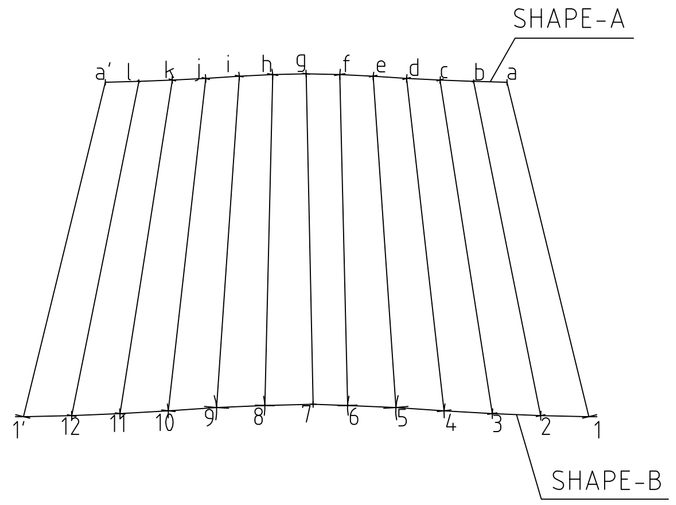

Coordinate	Diagonals
1-b	646
2-c	638
3-d	630
4-e	623
5-f	615
6-g	609

Coordinate	True Length
a-1	627
b-2	621
c-3	615
d-4	609
e-5	605
f-6	603
g-7	602

Coordinate	Diagonals
1'-l	646
12-k	638
11-j	630
10-i	623
9-h	615
8-g	608.577

Coordinate	True Length
l-12	621
k-11	615
j-10	609
i-9	605
h-8	603
g-7	602

DEVELOPMENT OF POS NO: 01/02

(TOTAL QTY: 2 NOS)

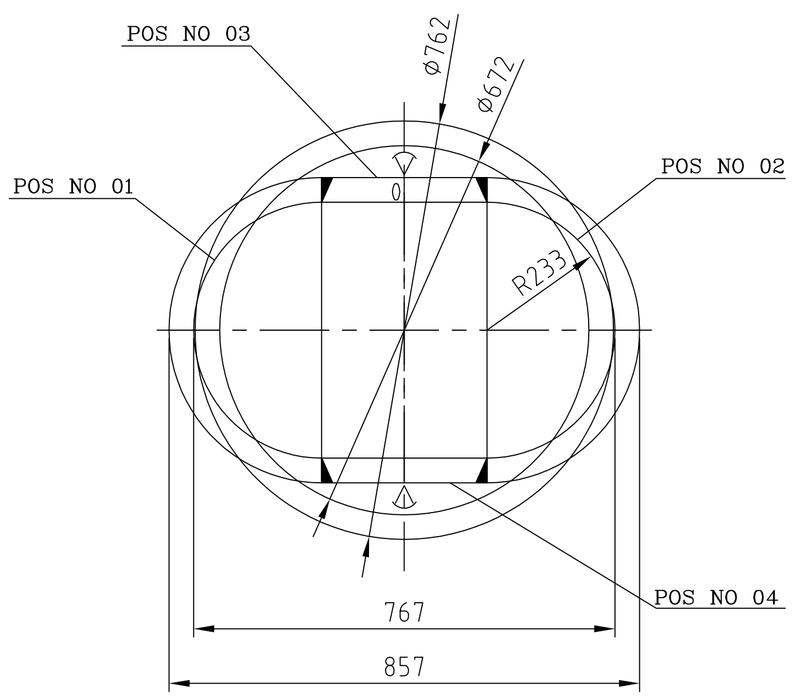

PLAN

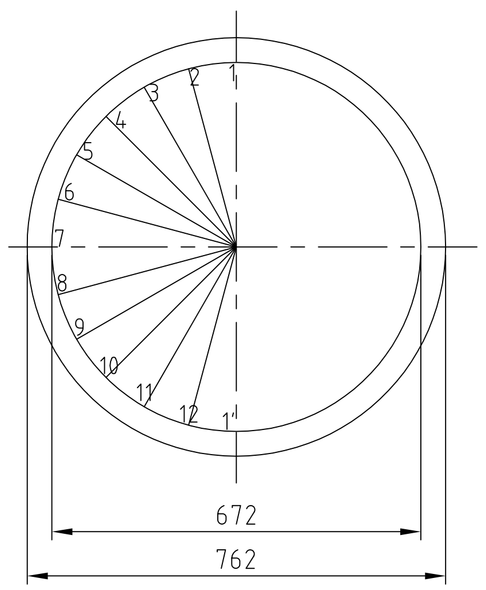

SHAPE–B

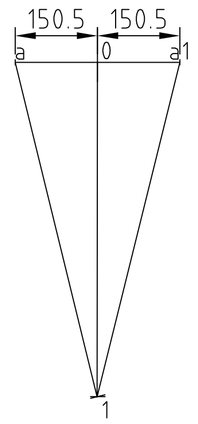

Coordinate	Diagonals
0-a	150.5
0-a1	150.5
1-a	627
1-a1	627.38

DEVELOPMENT OF POS NO: 03/04

(TOTAL QTY: 2 NOS)

THE INFORMATION ON THIS DOCUMENT IS THE PROPERTY OF BHARAT HEAVY ELECTRICALS LIMITED. IT MUST NOT BE USED DIRECTLY OR INDIRECTLY IN ANY WAY DETRIMENTAL TO THE INTEREST OF THE COMPANY

GENERAL DIMENSIONAL LIMITS,FITS & TOLERANCES AS PER HY0230261

COMPUTER FILE NAME

REF. DRG. NO. 2301250003 3/M

SIGN. AND DATE

INVENTORY NO

ALTERED	REV.	DATE	ALTERED	REV.	DATE	ALTERED	REV.	DATE	ALTERED	REV.	DATE	ALTERED	REV.	DATE	ALTERED	REV.	DATE	ALTERED	REV.	DATE	ALTERED	REV.	DATE	ALTERED
CHD/APPD			CHD/APPD			CHD/APPD			CHD/APPD			CHD/APPD			CHD/APPD			CHD/APPD			CHD/APPD			CHD/APPD
	ZONE			ZONE			ZONE			ZONE			ZONE			ZONE			ZONE			ZONE		

BHARAT HEAVY ELECTRICALS LTD.
HYDERABAD

	NAME	SIGN.	DATE
DRN.			
CHD.			
APPD.			

NO.OF VAR. –NA–

DEPT.	UNTOL. DIMS. GR. C/M/F		SCALE	WEIGHT (KG)	REF. TO ASSY. DRG.	ITEM NO.	NO.OF ITEMS
CODE 415			1:12.5	–	-N.A.-	-N.A.-	-N.A.-

TITLE: BCL 806

CARD CODE: N.A.

DRAWING NO. XX REV. 01

SHT. No 1 NO. OF SHT. 1