FIRST ANGLE PROJECTION (ALL DIMENSIONS IN MILLIMETRES)

DRAWING No. 2-N0-468-00011

ALL DIMENSIONS ARE IN MILLIMETRES

CAUTION THE INFORMATION ON THIS DOCUMENT IS THE PROPERTY OF BHARAT HEAVY ELECTRICALS LTD. IT MUST NOT BE USED DIRECTLY OR INDIRECTLY IN ANY WAY DETRIMENTAL TO THE INTEREST OF THE COMPANY.

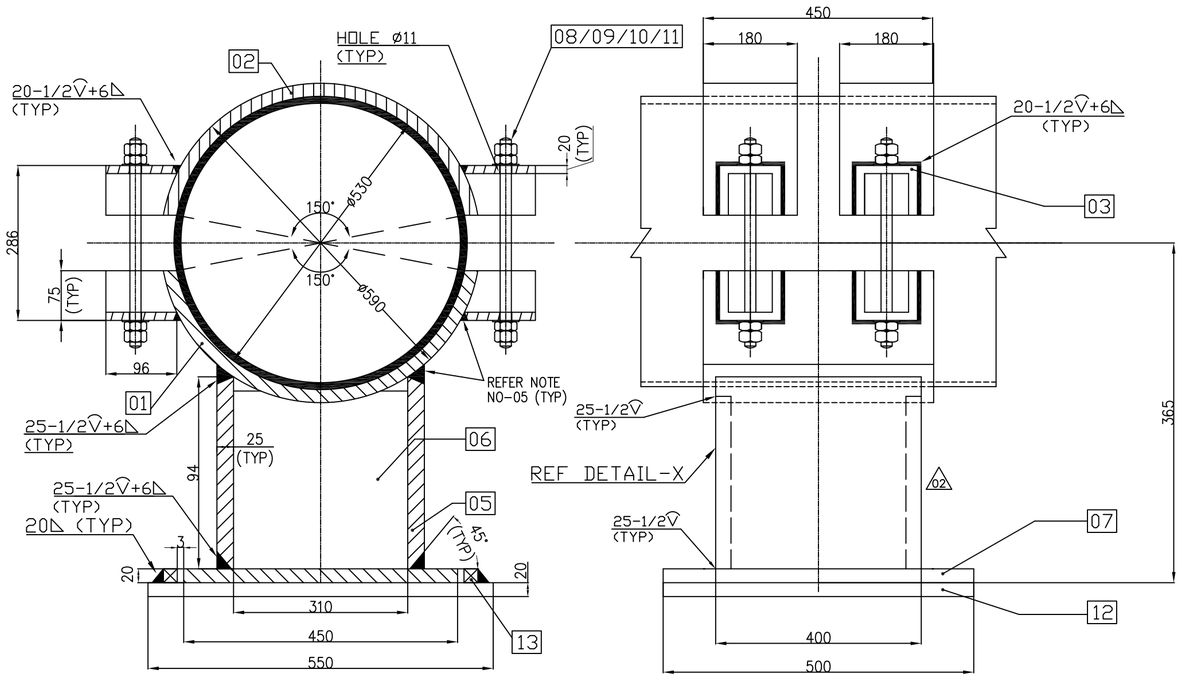

SECTION A-A

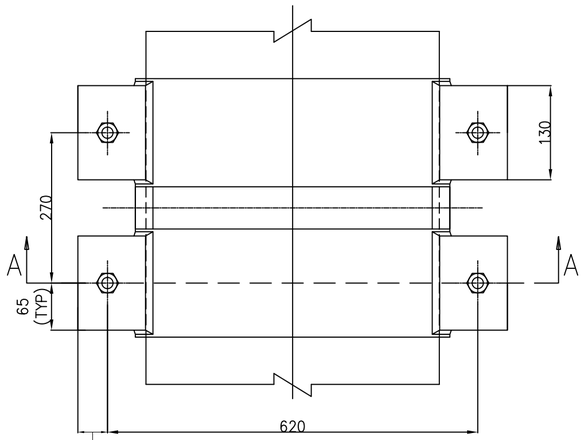

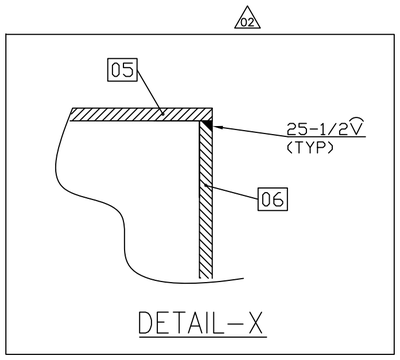

DETAIL-X

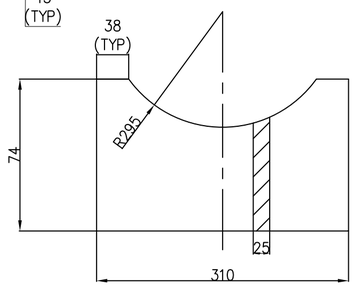

ITEM NO.06

NOTES:

01 1. FOR MANUFACTURING, SUPPLY AND NDT REQUIREMENTS REFER NPCIL APPROVED QUALITY PLAN.
2. FASTENERS SHALL HAVE METRIC SCREW THREADS AS PER ASME B1.13M.
3. DESIGN OF PIPE SUPPORTS AS PER DOCUMENT NO – IO2.KK34.0.PEB.TW.0K.WD001 (SHEET 07 OF 10)
4. ALL WELDS SHALL BE FULL PENETRATION JOINTS UNLESS OTHERWISE SPECIFIED.
01 5. WELDS SHALL BE ROUNDED TO ENSURE A SMOOTH PROFILE AS PER PAINTING MANUFACTURER RECOMMENDATION.
6. ITEM NOS.12 & 13 ARE SUPPLIED LOOSE. SAME SHALL BE WELDED AT SITE AS PER THIS DRAWING.
01 7. FOR PAINTING DETAILS REFER NPCIL APPROVED PAINTING SCHEME.
02 8. ITEM NO-03 SHALL BE FORMED TO REQUIRED SHAPE USING SUPPLIED RAW MATERIAL PLATE.

ITEM No	DESCRIPTION	DRAWING No.	ITEM NO. / VAR NO.	MATERIAL CODE. / MATERIAL SPEC.	A / C	UNIT WT. / QTY.
13	SQUARE GUIDE BAR 20x20 L=500	2-N0-468-00011		– / SA516GR70	C	1|570 / 2
12	SLIDING PLATE 20THK 500x550	2-N0-468-00011		– / SA516GR70	C	43|175 / 1
11	ASTM F436 WASHER M10	2-N0-468-00011		F436 TYPE-1	C	0|004 / 8
10	ASME B18.16M LOCK NUT M10x1.5-6H	2-N0-468-00011		– / SA194 GR2H	C	0|012 / 8
09	ASME B18.2.4.6M NUT M10x1.5-6H	2-N0-468-00011		– / SA194 GR2H	C	0|012 / 8
08	ASME B18.31.1M STUD M10x1.5-6g L=360	2-N0-468-00011		– / SA193 GRB7	C	0|220 / 4
07	BASE PLATE 20THK 450x500	2-N0-468-00011		– / SA516GR70	C	35|325 / 1
06	SUPPORT PLATE-2 25THK 74x310	2-N0-468-00011		– / SA516GR70	C	4|500 / 2
05	SUPPORT PLATE-1 25THK 94x400	2-N0-468-00011		– / SA516GR70	C	7|379 / 2
02 04	PLATE 20THK 55x96	2-N0-468-00011		– / SA516GR70	C	0|829 / 16
03	PLATE 20THK 280x96	2-N0-468-00011		– / SA516GR70	C	4|220 / 8
02	CLAMP PLATE-2 30THK 180x747	2-N0-468-00011		– / SA516GR70	C	31|665 / 2
01	CLAMP PLATE-1 30THK 450x747	2-N0-468-00011		– / SA516GR70	C	79|163 / 1

REV	DATE	ALTERED / APPROVED
02	15.09.20	ALTERED : BHARATH / APPROVED : TRINADH

ZONE: DRAWING REVISED INCORPORATING NPCIL COMMENTS DATED 05.08.20
REVISIONS MARKED AS 02

REV	DATE	ALTERED / APPROVED
01	09.07.20	ALTERED : B.B.GHADAI / APPROVED : R.BHARATH

ZONE: DRAWING REVISED INCORPORATING NPCIL COMMENTS DATED 23.05.20
REVISIONS MARKED AS 01

CUSTOMER: NUCLEAR POWER CORPORATION OF INDIA

BHEL CUSTOMER NO: 7430&7431

NAME OF PROJECT: KUDANKULAM NUCLEAR POWER PROJECT 2X1000MWe (UNIT 03 & 04)

WO NO: 400 442 DATED 05/08/2019

BHARAT HEAVY ELECTRICALS LTD., PIPING CENTRE, CHENNAI 600 017

	NAME	SIGN	DATE
DRN	BHARATH	–sd–	11.05.20
CHD	TRINADHA RAO	–sd–	13.05.20
APPD	SARAVANAN.C	–sd–	13.05.20

DEPT.	GRADE OF UN TOL. DIM		SCALE	WEIGHT (Kg).	REFERENCE DRAWING
CODE	C/M/F		N.T.S	~278	PEB PIPING-TUNNEL NO(S) 31UQZ, 32UQZ 41UQZ, 42UQZ

TITLE: SLIDING GUIDE SUPPORT FOR PIPE OD530x12 THK

DRAWING No. 2-N0-468-00011 REV 02

SIZE A2

V: A2