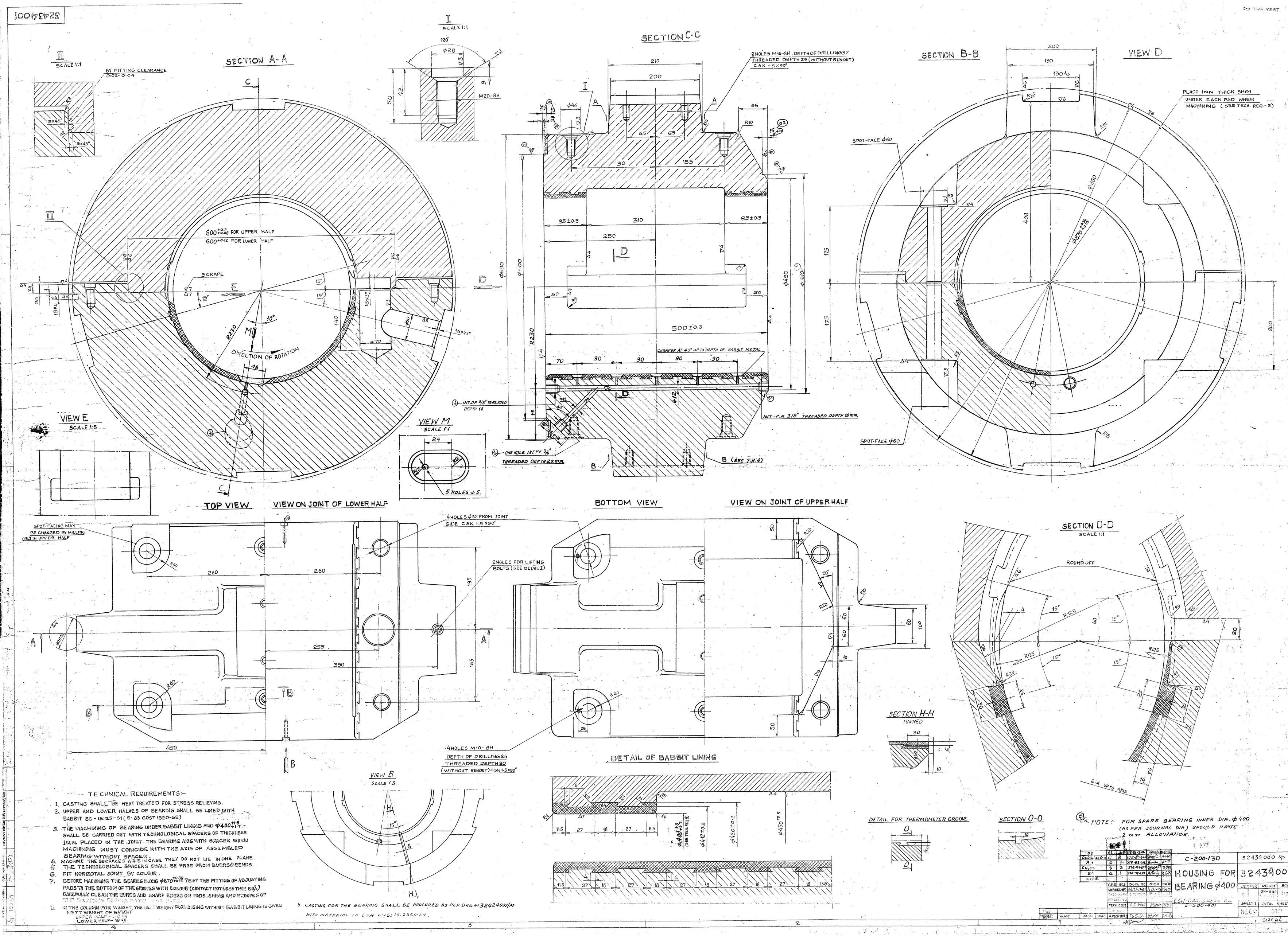
SECTION A-A
SECTION C-C
SECTION B-B
VIEW D
VIEW E
SCALE 1:5
VIEW M
SCALE 1:1
TOP VIEW
VIEW ON JOINT OF LOWER HALF
BOTTOM VIEW
VIEW ON JOINT OF UPPER HALF
SECTION D-D
SCALE 1:1
SECTION H-H
TURNED
VIEW B
SCALE 1:5
DETAIL OF BABBIT LINING
DETAIL FOR THERMOMETER GROOVE
SECTION O-O
DIRECTION OF ROTATION
SCRAPE
BY FITTING CLEARANCE 0.02-0.04
8 HOLES M16-8H, DEPTH OF DRILLING 37 THREADED DEPTH 29 (WITHOUT RUNOUT) C SK 1.5 X 90°
PLACE 1mm THICK SHIM UNDER EACH PAD WHEN MACHINING (SEE TECH. REQ.-5)
SPOT-FACE ϕ60
CHAMFER AT 45° UP TO DEPTH OF BABBIT METAL
INT-F.P. 3/8" THREADED DEPTH 18 mm.
INT. P.F 3/8" THREADED DEPTH 18
ONE HOLE INT. P.F. 3/4" THREADED DEPTH 22 mm.
5 HOLES ϕ5
SPOT FACING MAY BE CHANGED BY MILLING ONLY IN UPPER HALF
4 HOLES ϕ32 FROM JOINT SIDE C SK 1.5 X 90°
2 HOLES FOR LIFTING BOLTS (SEE DETAIL I)
4 HOLES M10-8H
DEPTH OF DRILLING 25
THREADED DEPTH 20
(WITHOUT RUNOUT) C SK 1.5 X 90°
ROUND OFF
E-4 UPTO AXIS
B (SEE T.R.4)
NOTE:- FOR SPARE BEARING INNER DIA. ϕ400 (AS PER JOURNAL DIA) SHOULD HAVE 2 mm ALLOWANCE.
TECHNICAL REQUIREMENTS:-
1. CASTING SHALL BE HEAT TREATED FOR STRESS RELIEVING.
2. UPPER AND LOWER HALVES OF BEARING SHALL BE LINED WITH BABBIT Б6-15:25-61 (Б-83 GOST 1320-55)
3. THE MACHINING OF BEARING UNDER BABBIT LINING AND ϕ400 +1.8 +1.7 SHALL BE CARRIED OUT WITH TECHNOLOGICAL SPACERS OF THICKNESS 1mm PLACED IN THE JOINT. THE BEARING AXIS WITH SPACER WHEN MACHINING MUST COINCIDE WITH THE AXIS OF ASSEMBLED BEARING WITHOUT SPACER.
4. MACHINE THE SURFACES A-B IN CASE THEY DO NOT LIE IN ONE PLANE.
5. THE TECHNOLOGICAL SPACERS SHALL BE FREE FROM BURRS & BENDS.
6. FIT HORIZOTAL JOINT BY COLOUR.
7. BEFORE MACHINING THE BEARING ALONG ϕ870 +0.35 +0.15 TEST THE FITTING OF ADJUSTING PADS TO THE BOTTOM OF THE GROOVES WITH COLOUR (CONTACT NOT LESS THAN 80%) CAREFULLY CLEAN THE BURRS AND SHARP EDGES ON PADS, SHIMS AND GROOVES OF THE BEARING BEFORE INSTALLING THEM INTO
8. IN THE COLUMN FOR WEIGHT, THE NETT WEIGHT FOR HOUSING WITHOUT BABBIT LINING IS GIVEN
NETT WEIGHT OF BABBIT
UPPER HALF - 22 kg
LOWER HALF - 19 kg
9. CASTING FOR THE BEARING SHALL BE PROCURED AS PER DRG. № 32424001/M WITH MATERIAL TO GOST 6-25; 15-2856-64.
C-200-130
HOUSING FOR BEARING ϕ400
32434001
32434000 Sp
E-300-401
SHEET 1 TOTAL SHEETS 2
SIZE A4