FIRST ANGLE PROJECTION (ALL DIMENSIONS ARE IN mm) FORM DG 46 (B)

DRAWING No. STE-TD-194-H

UNLESS SPECIFIED

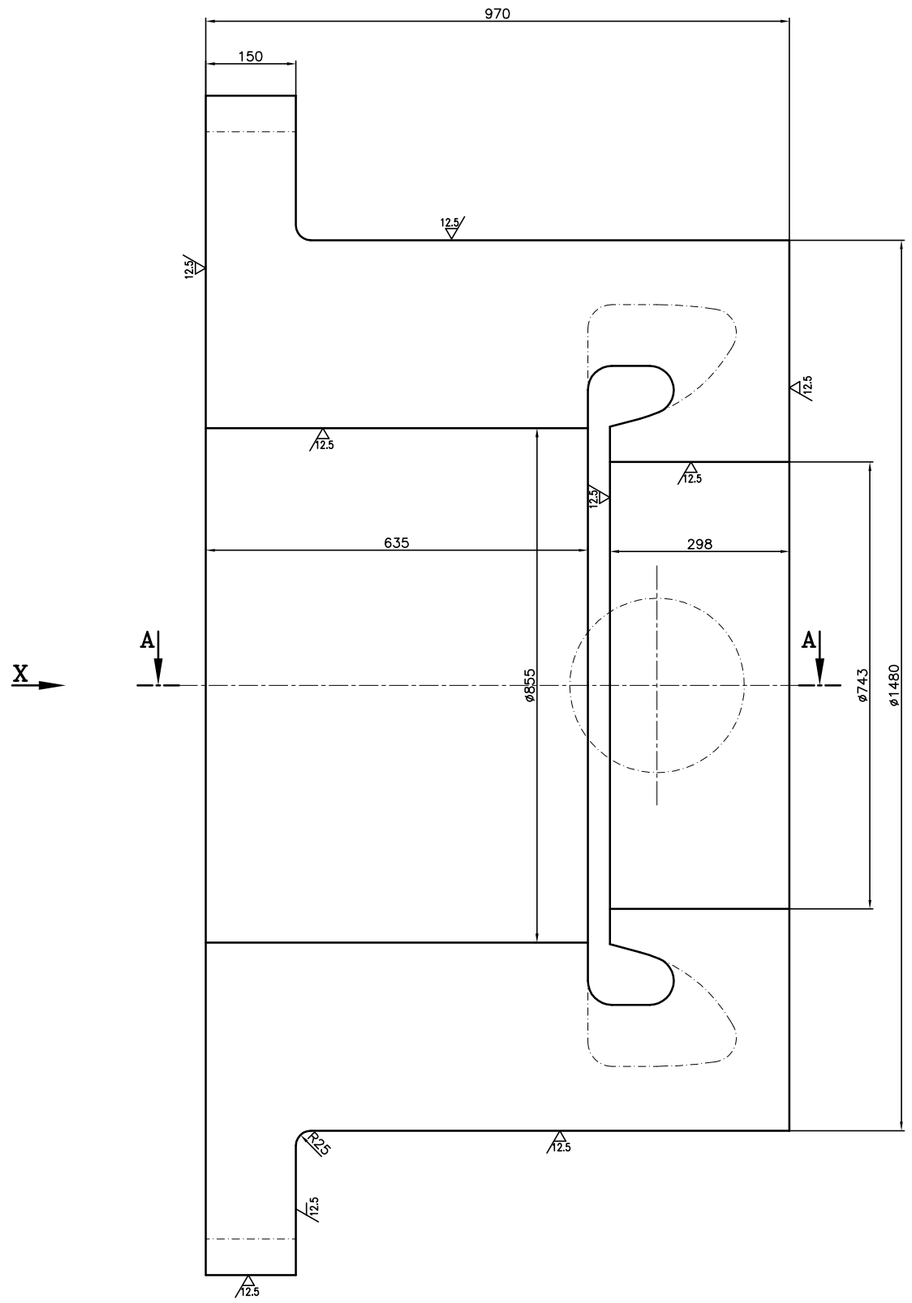

JOINT PLANE VIEW

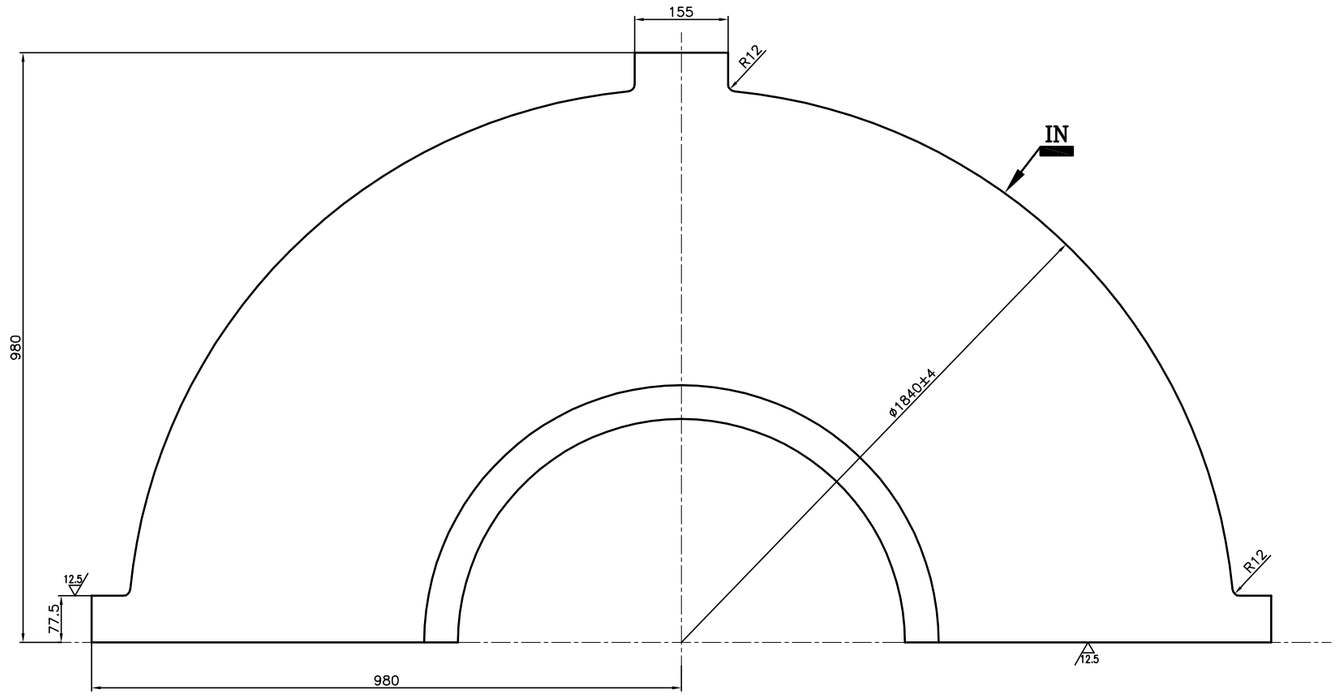

VIEW–X

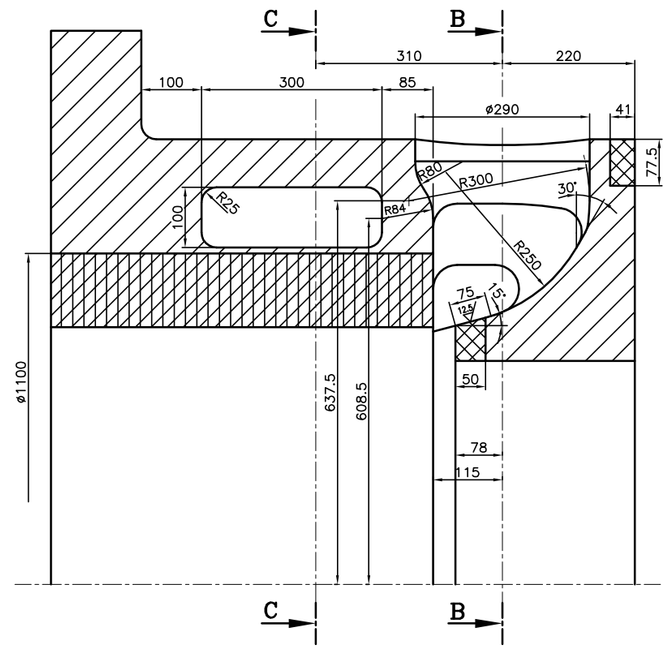

SECTION AA

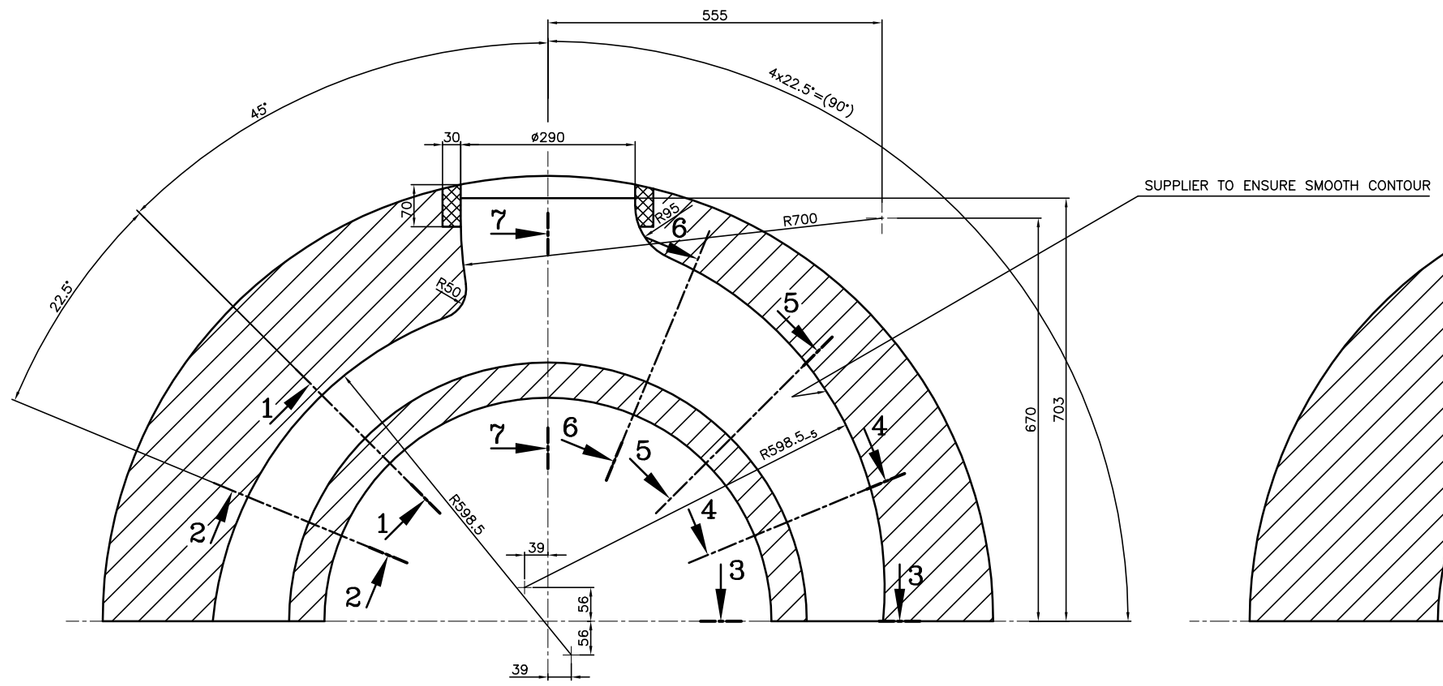

SECTION BB

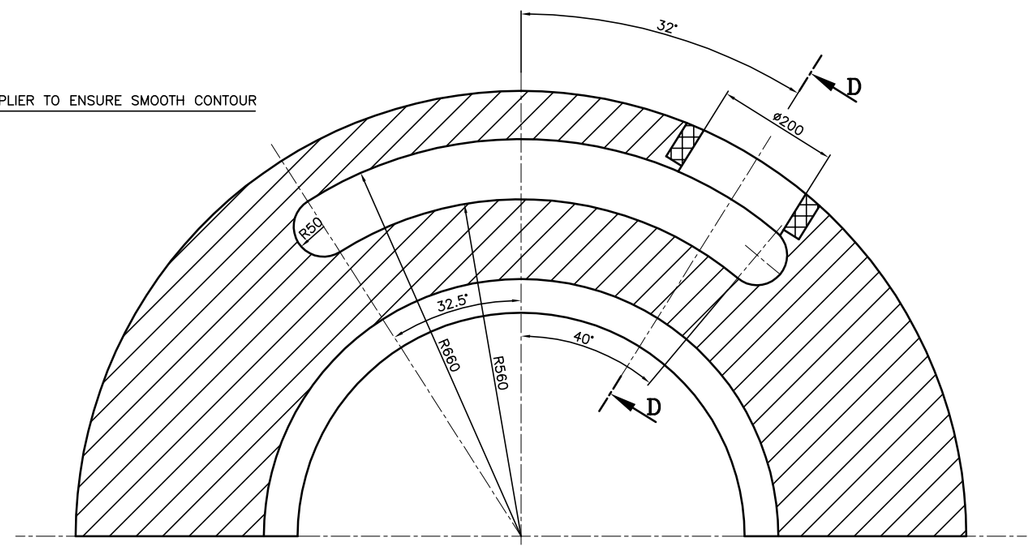

SECTION CC

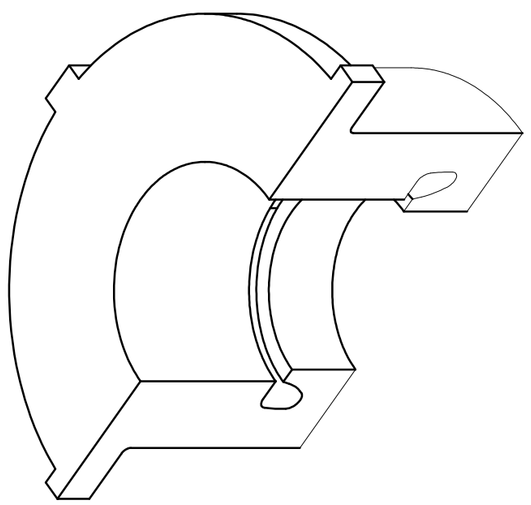

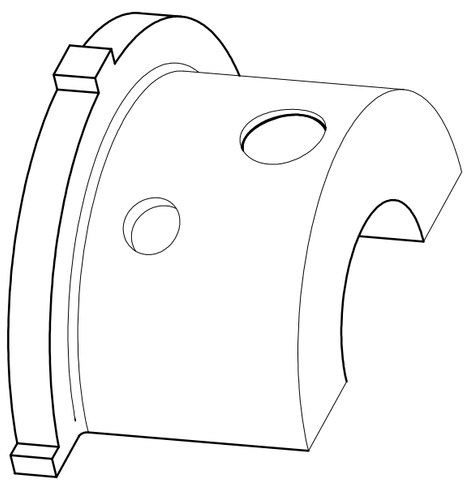

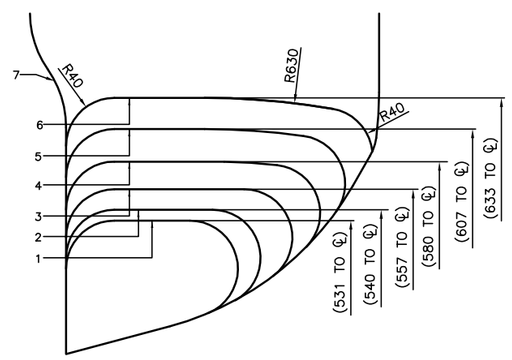

SECTION OF CORE
SECTION 1–1 TO 7–7
SEE SECTION BB
(SCALE 1:2.5)

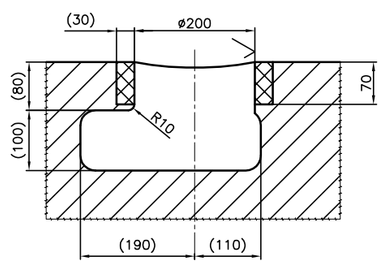

SECTION DD

TECHNICAL REQUIREMENTS:–

1. THE CASTING SHALL BE SUPPLIED IN ROUGH MACHINED CONDITION AS PER ORDERING SPECIFICATION WITH 3±1mm ALLOWANCE ON ALL SURFACES MARKED WITH MACHINING SYMBOL
2. UNLESS OTHERWISE SPECIFIED ANY WHERE ON THE DRAWING THE CASTING SHALL CONFORM TO QUALITY LEVEL 2.
3. IDENTIFICATION NUMBER SHALL BE CAST ON AT THE LOCATION SHOWN AS IN . SUPPLIER'S EMBLEM AND DRAWING NO. SHALL BE CAST ON AT THE LOCATION SHOWN ▬ .
4. REFERENCE LINE SHALL BE MARKED ON THE CASTING JOINT PLANE
5. ▨ IN THIS AREA QUALITY LEVEL : 1
6. ▨ SPECIAL SURFACE ACC TO : 1
7. √FINISH MACHINED TO DRAWING DIMENSION

MATERIAL : ALLOY 625

VAR.00	REMARKS	ITEM	DESCRIPTION	STD	DRAWING NO. NO.	VAR	MATERIAL CODE / MATERIAL SPECN	UNIT	UNIT WEIGHT	NO. OF ITEMS

GRADE OF UNTOL.DIM	STE	S.BANSAL	sd/– 03.03.16
M/CG.–℄/M/F AA023020 8	NCT	A.S./S.J.	sd/– 16.03.16
WELDING–A/B/℄/D AA0621104			
GAS CUTTING–T3 AA0621101			

~~GMS No.~~ / C.B.O.M — STATUS OF DRG. B

TYPE OF PRODUCT OR NAME OF CUSTOMER/PROJECT: **STEAM TURBINE**

BHARAT HEAVY ELECTRICALS LTD. RANIPUR, HARDWAR

	NAME	SIGN	DATE
DRN	RAJPAL	sd/–	26.02.16
CHD	SUJEET	sd/–	01.03.16
APPD	T.S.G	sd/–	16.03.16

DEPT MTE	SCALE	WEIGHT (KG)	REF. TO ASSY. DRG.	ITEM No.	NO. OF ITEMS
CODE 4300	1:5	4900	–		

TITLE : **CASTING FOR CASING LOWER HALF** (ROUGH MACHINED) FOR CASTABILITY TRIAL

CARD CODE — DRAWING NO. **STE–TD–194–H**

SHEET No. 01 No. OF SHEETS 01

A0 SIZE

REV	DATE	ALTERED / CHECKED	REV	DATE	ALTERED / CHECKED	REV	DATE	ALTERED / CHECKED

COPYRIGHT AND CONFIDENTIAL
THE INFORMATION ON THIS DOCUMENT IS THE PROPERTY OF BHARAT HEAVY ELECTRICALS LIMITED
IT MUST NOT BE USED DIRECTLY OR INDIRECTLY IN ANY WAY DETRIMENTAL TO THE INTEREST OF THE COMPANY

INVENTORY No. | SIGN & DATE | REF.DRAWING No.