FIRST ANGLE PROJECTION

ALL DIMENSIONS ARE IN mm.

DRG No. 3-986-01-10161 REV 00

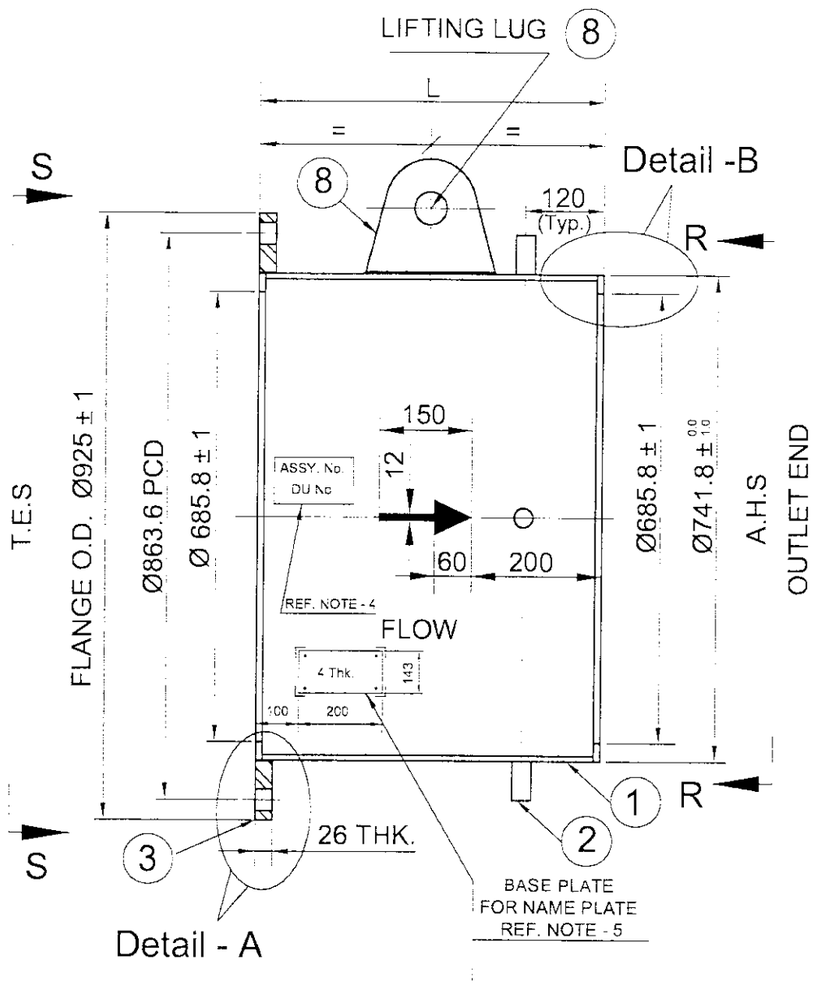

SECTIONED VIEW

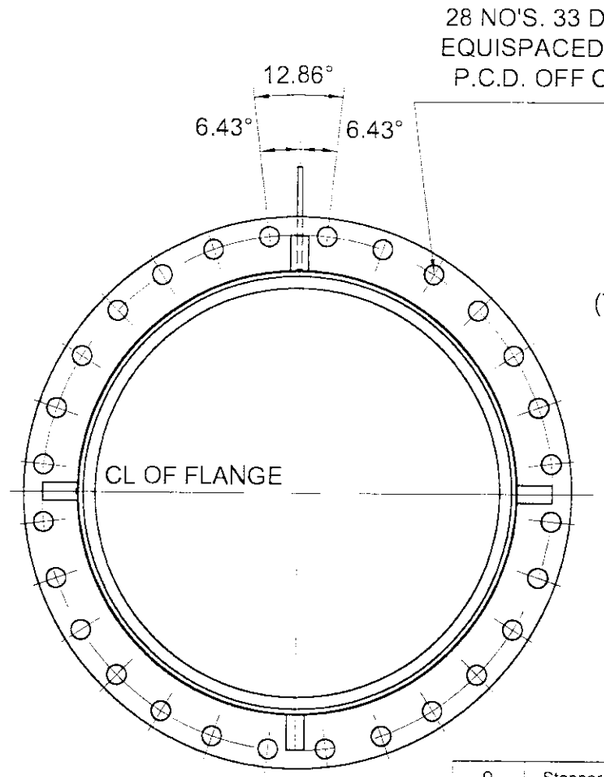

VIEW-SS

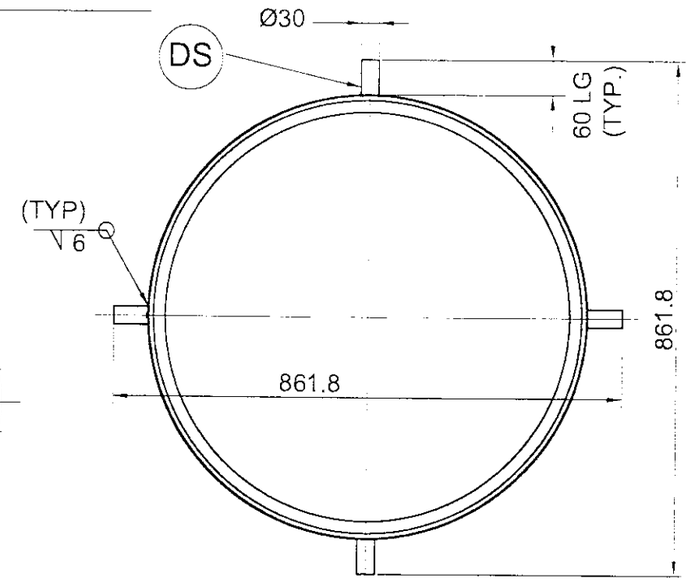

VIEW-RR

SL No.	Description	Size	Material	Qty. per Bend	Wt. / Piece (Kgs.)	Remarks
9	Stopper Ring	10 mm Thk.	IS:2062 - 2011 E250 BR KILLED STEEL	2 No's.	4.9	
8	Lifting Lug	8 mm Thk.	IS:2062 - 2011 E250 BR KILLED STEEL	1 No.	1.3	
7	Washer	–	IS:2016	56 No's.	–	NOT IN SCOPE OF VENDOR
6	Hex. Nut	–	IS:1367 (PART-3) Gr. 8.8	28 No's.	–	NOT IN SCOPE OF VENDOR
5	Hex. Bolt	–	IS:1367 (PART-3) Gr. 8.8	28 No's.	–	NOT IN SCOPE OF VENDOR
4	Gasket	–	NON - ASBESTOS	1 No.	–	NOT IN SCOPE OF VENDOR
3	Flange (26 thk.)	O.D 925 x ID 744.8	IS:2062 - 2011 E250 BR KILLED STEEL	1 No.	43.5	
2	Dresser Stopper	Ø30 x 60 LG.	SAE 1018	4 No's.	0.33	
1	Casing	8 mm Thk.	IS:2062 - 2011 E250 BR KILLED STEEL	1 No.	Refer Table - 1	

TABLE - 2 PULVERISED COAL BEND PIPE MATERIAL DETAIL

THE INFORMATION ON THIS DOCUMENT IS THE PROPERTY OF BHARAT HEAVY ELECTRICALS LIMITED., IT MUST NOT BE USED DIRECTLY OR INDIRECTLY IN ANY WAY DETRIMENTAL TO THE INTEREST OF THE COMPANY

REF. DRG. No.

SIGN AND DATE

INVENTORY No.

REV	DATE	ALTERED / CHECKED	REV	DATE	ALTERED / CHECKED	REV	DATE	ALTERED / CHECKED

Name of Customer/Project

BHARAT HEAVY ELECTRICALS LTD.,
ELECTROPORCELAINS DIVISION
BANGALORE – 560 012

	NAME	SIGN	DATE
DRN	Kaushik.K		09-11-2016
CHD	M.Vinod		10/11/16
APPD	Felix.J		10.11.16

DEPT / CODE	GRADE OF TOL DIM C/M/F	SCALE	WEIGHT (kg)	REF TO ASSY.DRG	ITEM No.	No.OF ITEMS
		N.T.S.	— (Approx)	EL-DG-3-986-01-10160 7122 - Sheet 1		

TITLE: CASING FOR STRAIGHT PIPE - 700NB

CARD CODE

DRAWING No. 3-986-01-10161 REV. 00

SHEET No. 1 No.OF SHEETS 3

SUPERSEDES DRG. No.

SHT.24 SIZE A3 420 x 297

FIRST ANGLE PROJECTION

ALL DIMENSIONS ARE IN mm.

DRG No. 3-986-01-10161 REV 00

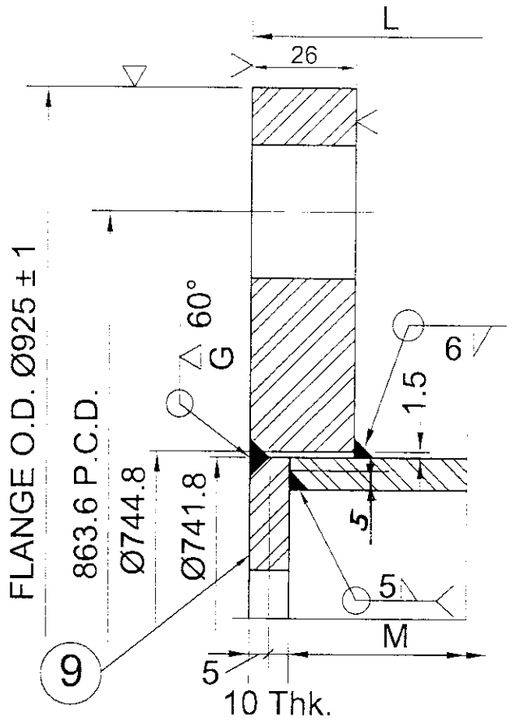

ENLARGED SEC. DETAIL A

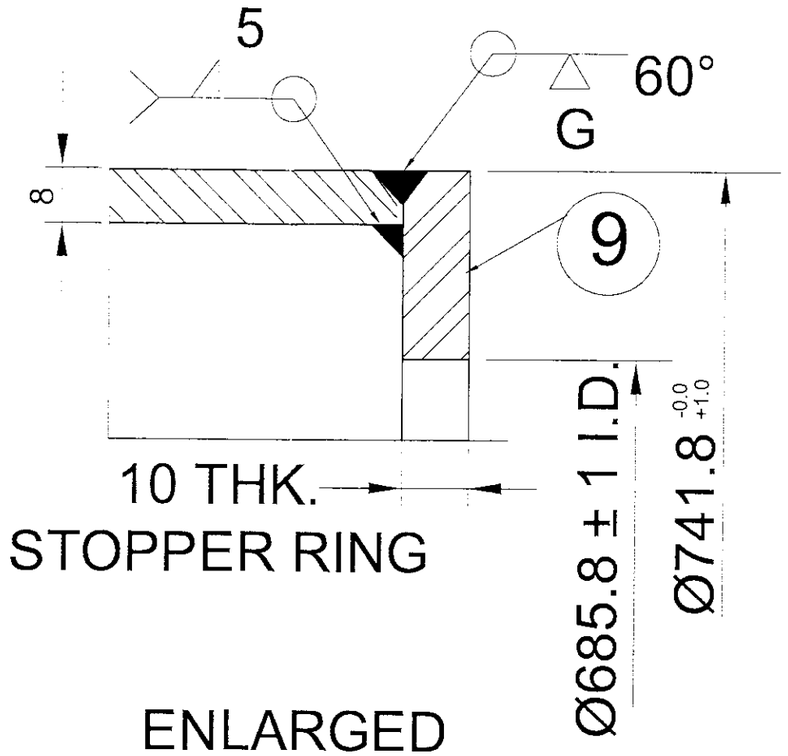

ENLARGED SEC. DETL B

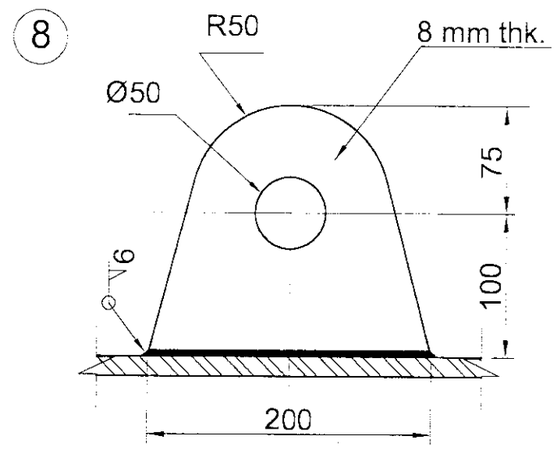

DETAIL OF LIFTING LUG

VAR. No.	DU No.	Assembly No.	L	M	END CONN-ECTION INLET SIDE	END CONN-ECTION OUTLET SIDE	Qty No's per Unit	Wt. (kgs.)/ Pipe
01	CLCP-001	H56-1,H78-1, F12-1,F34-1,F56-1,F78-1,G12-1,G34-1G56-1,G78-1,H12-1,H34-1, C56-1,C78-1,D12-1,D34-1,D56-1,D78-1,E12-1,E34-1,E56-1,E78-1, A12- 1,A34-1,A56-1,A78-1,B12-1,B34-1,B-56-1,B78-1,C12-1,C34-1,	529	509	F	P	32	75.0

TABLE-1

Name of Customer/Project

BHARAT HEAVY ELECTRICALS LTD.,
ELECTROPORCELAINS DIVISION
BANGALORE – 560 012

	NAME	SIGN	DATE
DRN	Kaushik.K		09-11-2016
CHD	M.Vinod		10/11/16
APPD	Felix.J		10-11-16

REV	DATE	ALTERED / CHECKED	REV	DATE	ALTERED / CHECKED	REV	DATE	ALTERED / CHECKED

DEPT / CODE | GRADE OF TOL DIM C/M/F | SCALE N.T.S. | WEIGHT (kg) – (Approx) | REF TO ASSY.DRG EL-DG-3-986-01-10160 7122 - Sheet 1 | ITEM No. | No.OF ITEMS

TITLE: CASING FOR STRAIGHT PIPE - 700NB

CARD CODE

DRAWING No. 3-986-01-10161 REV. 00

SHEET No. 2 No.OF SHEETS 3

SUPERSEDES DRG. No.

SHT.24 SIZE A3 420 x 297

THE INFORMATION ON THIS DOCUMENT IS THE PROPERTY OF BHARAT HEAVY ELECTRICALS LIMITED., IT MUST NOT BE USED DIRECTLY OR INDIRECTLY IN ANY WAY DETRIMENTAL TO THE INTEREST OF THE COMPANY

REF. DRG. No.

SIGN AND DATE

INVENTORY No.

FIRST ANGLE PROJECTION

ALL DIMENSIONS ARE IN mm.

DRG No. 3-986-01-10161

REV 00

NOTE:-

1. FOR CONSTRUCTION MATERIAL REFER TABLE-2
2. ALL SUPPLIES TO CONFORM CLN:QP:01/00. WELDING AS PER WP:CL001A & AWS:D 1.1.
3. DIMENSIONS INDICATED ARE FINISHED SIZE ONLY.
4. ASSEMBLY No., DU No., AND ARROW HEAD TO BE WELD DEPOSITED OVER CASING AS SHOWN , AS PER CE:1501:21
5. BASE PLATE FOR NAME PLATE TO BE WELDED ON TO CASING, AT LOCATION SHOWN,
   FOR BASE PLATE & WELDING DETAILS REF DRG : 4 986 99 07720
6. ALL OVER MACHINING 6.3 FOR STOPPER RINGS.
7. A.H.S. =ARROW HEAD SIDE, T.E.S. = TAIL END SIDE, F= BOLTED FLANGE & P = PLAIN END.
8. FOR CASING Wt. REFER TABLE -1
   FOR Wt. OF LIFTING LUG, DRESSER STOPPER, STOPPER RINGS AND BOLTED FLANGE.
   REFER TABLE - 2
9. SURFACE PREPARATION AND PAINTING: REF PAINTING SCHEME DOC. No. : PS- L&T - KHARGONE. BENDS / PIPES.
10. OVERALL PIPE TOLERANCE:-
    a]. AXIAL SHIFT: ± 3 MM
    b]. OUT OF SQUARENESS: ± 3 MM.
11. ALL WELD FILLETS ARE 6 mm, IF NOT SPECIFIED.

THE INFORMATION ON THIS DOCUMENT IS THE PROPERTY OF BHARAT HEAVY ELECTRICALS LIMITED., IT MUST NOT BE USED DIRECTLY OR INDIRECTLY IN ANY WAY DETRIMENTAL TO THE INTEREST OF THE COMPANY

REF. DRG. No.

SIGN AND DATE

Name of Customer/Project

BHARAT HEAVY ELECTRICALS LTD.,
ELECTROPORCELAINS DIVISION
BANGALORE – 560 012

	NAME	SIGN	DATE
DRN	Kaushik K		09-11-2016
CHD	V Vinod		10/11/16
APPD	Felix J		10.11.16

INVENTORY No.	REV	DATE	ALTERED / CHECKED	REV	DATE	ALTERED / CHECKED	REV	DATE	ALTERED / CHECKED

DEPT / CODE	GRADE OF TOL DIM C/M/F	SCALE	WEIGHT (kg)	REF TO ASSY.DRG	ITEM No.	No.OF ITEMS
		N.T.S.	— (Approx)	EL-DG-3-986-01-10160 7122 - Sheet 1		

TITLE: CASING FOR STRAIGHT PIPE - 700NB

CARD CODE

DRAWING No. 3-986-01-10161 REV. 00

SHEET No. 3 No.OF SHEETS 3

SUPERSEDES DRG. No.

SHT.24 SIZE A3 420 x 297

FIRST ANGLE PROJECTION

ALL DIMENSIONS ARE IN mm.

DRG No. 3-986-01-10171 REV 00

THE INFORMATION ON THIS DOCUMENT IS THE PROPERTY OF BHARAT HEAVY ELECTRICALS LIMITED., IT MUST NOT BE USED DIRECTLY OR INDIRECTLY IN ANY WAY DETRIMENTAL TO THE INTEREST OF THE COMPANY

REF. DRG. No.

SIGN AND DATE

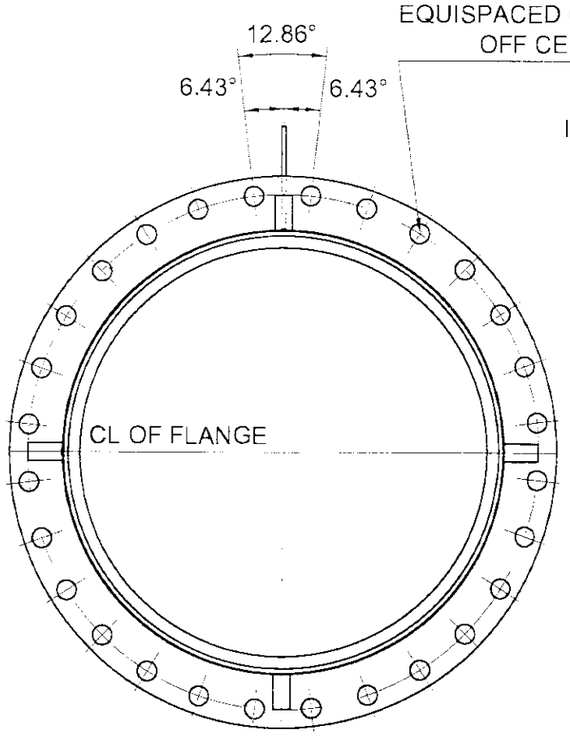

VIEW-SS

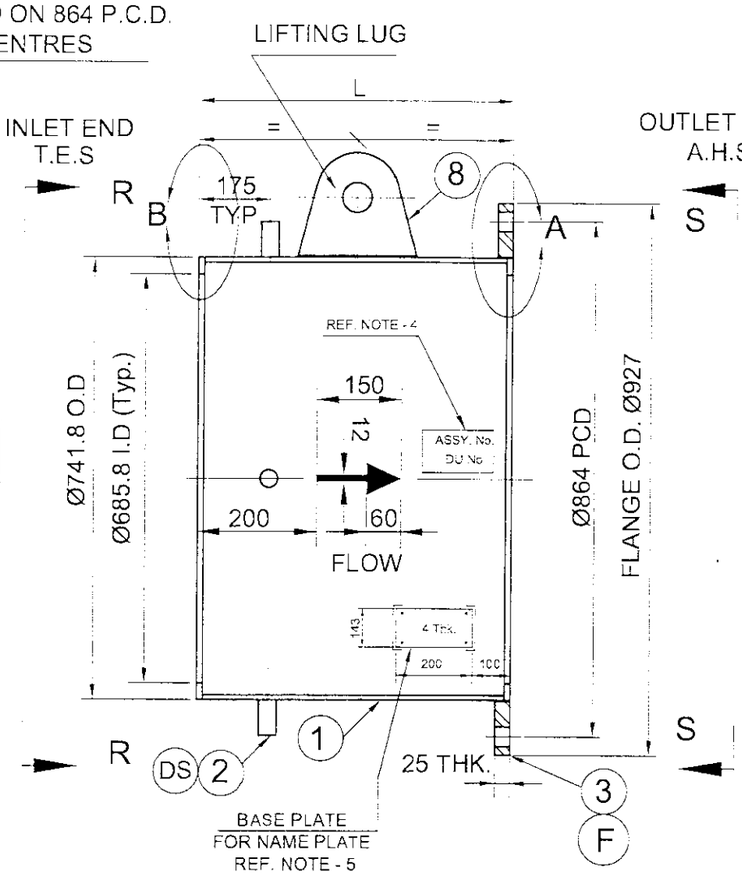

SECTIONED VIEW

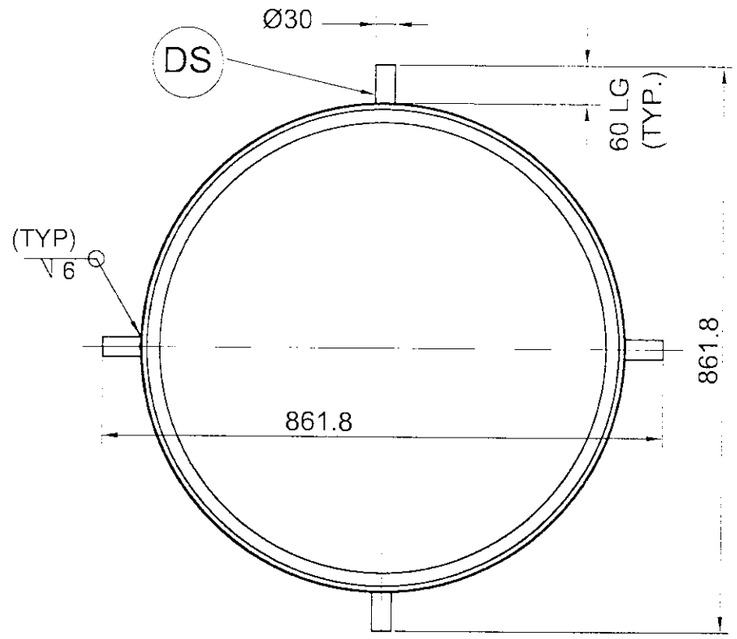

VIEW-RR

SL No.	Description	Size	Material	Qty. per Bend	Wt. / Piece (Kgs.)	Remarks
9	Stopper Ring	10 mm Thk.	IS:2062 - 2011 E250 BR KILLED STEEL	2 No's.	4.9	
8	Lifting Lug	8 mm Thk.	IS:2062 - 2011 E250 BR KILLED STEEL	1 No.	1.3	
7	Washer	-	IS:2016	56 No's.	–	NOT IN SCOPE OF VENDOR
6	Hex. Nut	-	IS:1367 (PART-3) Gr. 8.8	28 No's.	–	NOT IN SCOPE OF VENDOR
5	Hex. Bolt	-	IS:1367 (PART-3) Gr. 8.8	28 No's.	–	NOT IN SCOPE OF VENDOR
4	Gasket	-	NON - ASBESTOS	1 No.	–	NOT IN SCOPE OF VENDOR
3	Flange (25 thk.)	O.D 927 x ID 744.8	IS:2062 - 2011 E250 BR KILLED STEEL	1 No.	–	FREE ISSUE BY BHEL TO VENDOR
2	Dresser Stopper	Ø30 x 60 LG.	SAE 1018	4 No's.	0.33	
1	Casing	8 mm Thk.	IS:2062 - 2011 E250 BR KILLED STEEL	1 No.	Refer Table - 1	

TABLE - 2 PULVERISED COAL BEND PIPE MATERIAL DETAIL

Name of Customer/Project

BHARAT HEAVY ELECTRICALS LTD.,
ELECTROPORCELAINS DIVISION
BANGALORE – 560 012

	NAME	SIGN	DATE
DRN	Kaushik.K		09-11-2016
CHD	M Vinod		10/11/16
APPD	Felix.J		10.11.16

INVENTORY No.	REV	DATE	ALTERED / CHECKED	REV	DATE	ALTERED / CHECKED	REV	DATE	ALTERED / CHECKED

DEPT | CODE | GRADE OF TOL DIM C/M/F | SCALE N.T.S. | WEIGHT (kg) – (Approx)

REF TO ASSY.DRG EL-DG-3-986-01-10170 7122 - Sheet 2 | ITEM No. | No.OF ITEMS

TITLE: CASING FOR STRAIGHT PIPE - 700NB

CARD CODE

DRAWING No. 3-986-01-10171 REV. 00

SHEET No. 1 | No.OF SHEETS 3

SUPERSEDES DRG. No.

SHT.24 SIZE A3 420 x 297

FIRST ANGLE PROJECTION

ALL DIMENSIONS ARE IN mm.

DRG No. 3-986-01-10171 REV 00

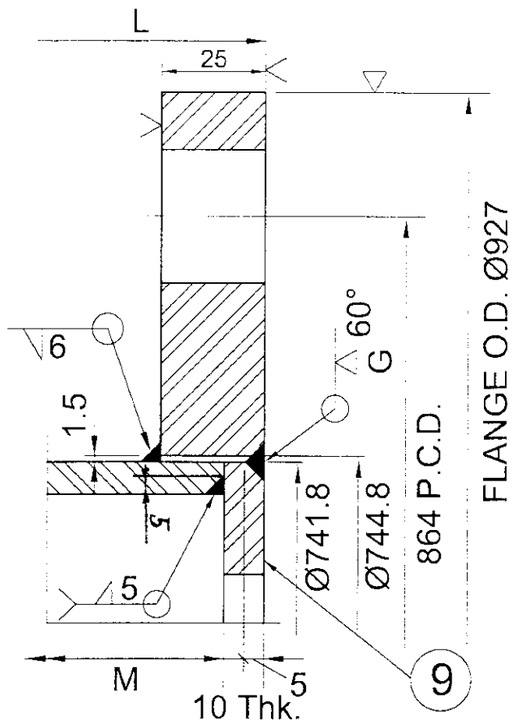

ENLARGED SEC. DETAIL A

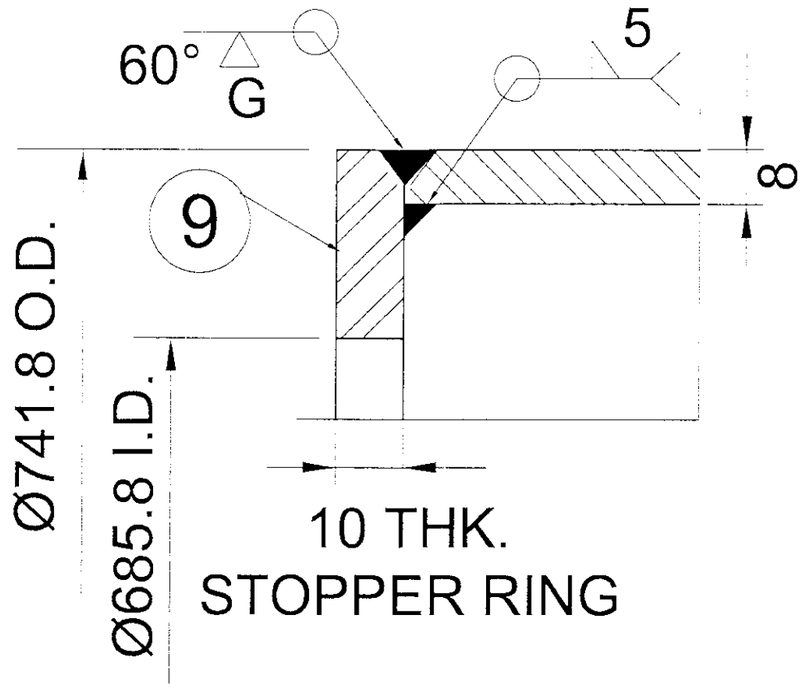

ENLARGED SEC. DETL B

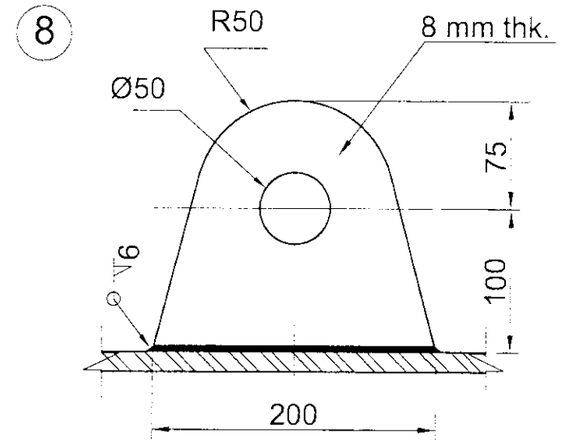

DETAIL OF LIFTING LUG

VAR. No.	DU No.	Assembly No.	L	M	END CONN-ECTION INLET SIDE	END CONN-ECTION OUTLET SIDE	Qty No's per Unit	Wt. (kgs.)/ Pipe
01	CLCP-002	H56-2,H78-2, F12-2,F34-2,F56-2,F78-2,G12-2,G34-2,G56-2,G78-2,H12-2,H34-2, C56-2,C78-2,D12-2,D34-2,D56-2,D78-2,E12-2,E34-2,E56-2,E78-2, A12- 2,A34-2,A56-2,A78-2,B12-2,B34-2,B-56-2,B78-2,C12-2,C34-2,	428.5	408.5	P	F	32	60.0

TABLE-1

Name of Customer/Project

BHARAT HEAVY ELECTRICALS LTD.,
ELECTROPORCELAINS DIVISION
BANGALORE – 560 012

	NAME	SIGN	DATE
DRN	Kaushik.K		09-11-2016
CHD	M.Vinod		10-11-2016
APPD	Felix.J		10-11-2016

DEPT	GRADE OF TOL DIM	SCALE	WEIGHT (kg)	REF TO ASSY.DRG	ITEM No.	No.OF ITEMS
CODE	C/M./F	N.T.S.	– (Approx)	EL-DG-3-986-01-10170 7122 - Sheet 2		

TITLE: CASING FOR STRAIGHT PIPE - 700NB

CARD CODE

DRAWING No. 3-986-01-10171 REV. 00

SHEET No. 2 No.OF SHEETS 3

REV	DATE	ALTERED / CHECKED	REV	DATE	ALTERED / CHECKED	REV	DATE	ALTERED / CHECKED

INVENTORY No.

SUPERSEDES DRG. No.

SHT.24 SIZE A3 420 x 297

THE INFORMATION ON THIS DOCUMENT IS THE PROPERTY OF BHARAT HEAVY ELECTRICALS LIMITED., IT MUST NOT BE USED DIRECTLY OR INDIRECTLY IN ANY WAY DETRIMENTAL TO THE INTEREST OF THE COMPANY

REF. DRG. No.

SIGN AND DATE

FIRST ANGLE PROJECTION

ALL DIMENSIONS ARE IN mm.

DRG No. 3-986-01-10171 REV 00

NOTE:-

1. FOR CONSTRUCTION MATERIAL REFER TABLE-2
2. ALL SUPPLIES TO CONFORM CLN:QP:01/00. WELDING AS PER WP:CL001A & AWS:D 1.1.
3. DIMENSIONS INDICATED ARE FINISHED SIZE ONLY.
4. ASSEMBLY No., DU No., AND ARROW HEAD TO BE WELD DEPOSITED OVER CASING AS SHOWN , AS PER CE:1501:21
5. BASE PLATE FOR NAME PLATE TO BE WELDED ON TO CASING, AT LOCATION SHOWN,
   FOR BASE PLATE & WELDING DETAILS REF DRG : 4 986 99 07720
6. ALL OVER MACHINING 6.3 FOR STOPPER RINGS.
7. A.H.S. =ARROW HEAD SIDE, T.E.S. = TAIL END SIDE, F= BOLTED FLANGE & P = PLAIN END.
8. FOR CASING Wt. REFER TABLE -1
   FOR Wt. OF LIFTING LUG, DRESSER STOPPER & STOPPER RINGS.
   REFER TABLE - 2
9. SURFACE PREPARATION AND PAINTING: REF PAINTING SCHEME DOC. No. : PS- L&T - KHARGONE. BENDS / PIPES.
10. OVERALL PIPE TOLERANCE:-
    a]. AXIAL SHIFT: ± 3 MM
    b]. OUT OF SQUARENESS: ± 3 MM.
11. APPROPRIATE STIFFENERS HAVE TO BE PROVIDED BETWEEN FLANGES AND CASING BODY TO MINIMIZE DISTORTION OF FLANGE WHILE WELDING. STIFFENERS HAVE TO BE REMOVED AFTER WELDING.
12. ALL WELD FILLETS ARE 6 mm, IF NOT SPECIFIED.

THE INFORMATION ON THIS DOCUMENT IS THE PROPERTY OF BHARAT HEAVY ELECTRICALS LIMITED., IT MUST NOT BE USED DIRECTLY OR INDIRECTLY IN ANY WAY DETRIMENTAL TO THE INTEREST OF THE COMPANY

REF. DRG. No.

SIGN AND DATE

INVENTORY No.

REV	DATE	ALTERED / CHECKED	REV	DATE	ALTERED / CHECKED	REV	DATE	ALTERED / CHECKED

Name of Customer/Project

BHARAT HEAVY ELECTRICALS LTD.,
ELECTROPORCELAINS DIVISION
BANGALORE – 560 012

	NAME	SIGN	DATE
DRN	Kaushik.K		09-11-2016
CHD	M.Vinod		10/11/16
APPD	Felix.J		10.11.16

DEPT / CODE	GRADE OF TOL DIM C/M/F		SCALE	WEIGHT (kg)	REF TO ASSY.DRG	ITEM No.	No.OF ITEMS
			N.T.S.	— (Approx)	EL-DG-3-986-01-10170 7122 - Sheet 2		

TITLE: CASING FOR STRAIGHT PIPE - 700NB

CARD CODE

DRAWING No. 3-986-01-10171 REV. 00

SHEET No. 3 No.OF SHEETS 3

SUPERSEDES DRG. No.

SHT.24 SIZE A3 420 x 297

FIRST ANGLE PROJECTION

ALL DIMENSIONS ARE IN mm.

DRG No. 3-986-01-10181

REV 01

THE INFORMATION ON THIS DOCUMENT IS THE PROPERTY OF BHARAT HEAVY ELECTRICALS LIMITED., IT MUST NOT BE USED DIRECTLY OR INDIRECTLY IN ANY WAY DETRIMENTAL TO THE INTEREST OF THE COMPANY

REF. DRG. No.

SIGN AND DATE

INVENTORY No.

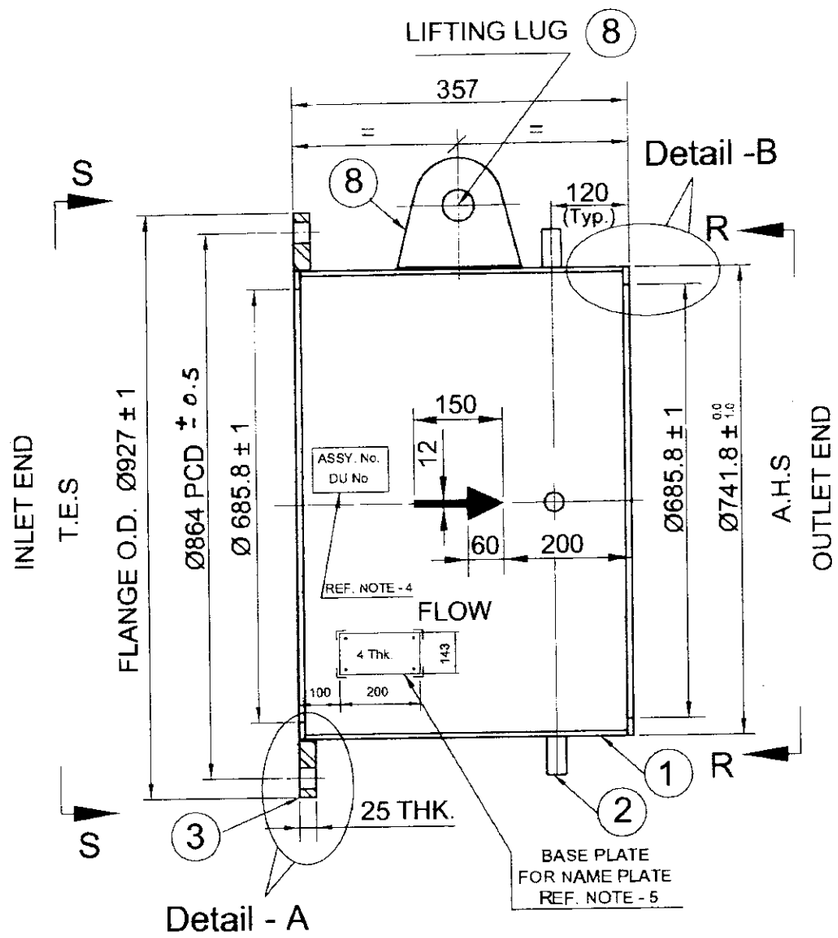

SECTIONED VIEW

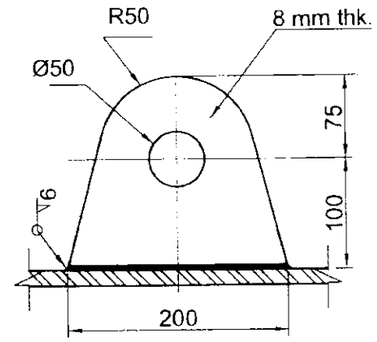

DETAIL OF LIFTING LUG

SL No.	Description	Size	Material	Qty. per Bend	Wt. / Piece (Kgs.)	Remarks
9	Stopper Ring	10 mm Thk.	IS:2062 - 2011 E250 BR KILLED STEEL	2 No's.	4.9	
8	Lifting Lug	8 mm Thk.	IS:2062 - 2011 E250 BR KILLED STEEL	1 No.	1.3	
7	Washer	–	IS:2016	56 No's.	–	NOT IN SCOPE OF VENDOR
6	Hex. Nut	–	IS:1367 (PART-3) Gr. 8.8	28 No's.	–	NOT IN SCOPE OF VENDOR
5	Hex. Bolt	–	IS:1367 (PART-3) Gr. 8.8	28 No's.	–	NOT IN SCOPE OF VENDOR
4	Gasket	–	NON - ASBESTOS	1 No.	–	NOT IN SCOPE OF VENDOR
3	Flange (25 thk.)	O.D 927 x ID 744.8	IS:2062 - 2011 E250 BR KILLED STEEL	1 No.	43.5	
2	Dresser Stopper	Ø30 x 60 LG.	SAE 1018	4 No's.	0.33	
1	Casing	8 mm Thk.	IS:2062 - 2011 E250 BR KILLED STEEL	1 No.	Refer Table - 1	

TABLE - 2 PULVERISED COAL BEND PIPE MATERIAL DETAIL

VAR. No.	DU No.	Assembly No.	END CONNECTION INLET SIDE	END CONNECTION OUTLET SIDE	Qty No's per Unit	Wt. (kgs.)/ Pipe
01	CLCP-018	H56-P1,H78-P1, F12-P1,F34-P1,F56-P1,F78-P1,G12-P1,G34-P1,G56-P1,G78-P1,H12-P1,H34-P1, C56-P1,C78-P1,D12-P1,D34-P1,D56-P1,D78-P1,E12-P1,E34-P1,E56-P1,E78-P1, A12- P1,A34-P1,A56-P1,A78-P1,B12-P1,B34-P1,B-56-P1,B78-P1,C12-P1,C34-P1,	F 1	P	32	49.8

TABLE - 1

Name of Customer/Project

BHARAT HEAVY ELECTRICALS LTD.,
ELECTROPORCELAINS DIVISION
BANGALORE – 560 012

	NAME	SIGN	DATE
DRN	Kaushik.K	-SD-	09-12-2016
CHD	M.Vinod	-SD-	10-11-2016
APPD	Felix.J	-SD-	10-11-2016

REV	DATE	ALTERED / CHECKED	REV	DATE	ALTERED / CHECKED	REV	DATE	ALTERED / CHECKED	
						01	20-12-16	ALTERED M.V / CHECKED J.F	

NOTE:- TABLES 1 & 2 MODIFIED. DETAIL 'B' FLANGED END CHANGED TO PLAIN END. DIMENSION 'L' & 'M' & NOTES CHANGED.

REFER RR- 2352

DEPT

CODE

GRADE OF TOL DIM C/M/F

SCALE N.T.S.

WEIGHT (kg) — (Approx)

REF TO ASSY. DRG EL-DG-3-986-01-10180 7122 - Sheet 3

ITEM No.

No. OF ITEMS

TITLE

CASING FOR STRAIGHT PIPE - 700NB

CARD CODE

DRAWING No. 3-986-01-10181

REV. 01

SHEET No. 1

No. OF SHEETS 3

SUPERSEDES DRG. No.

SHT.24 SIZE A3 420 x 297

FIRST ANGLE PROJECTION

ALL DIMENSIONS ARE IN mm.

DRG No. 3-986-01-10181 REV 01

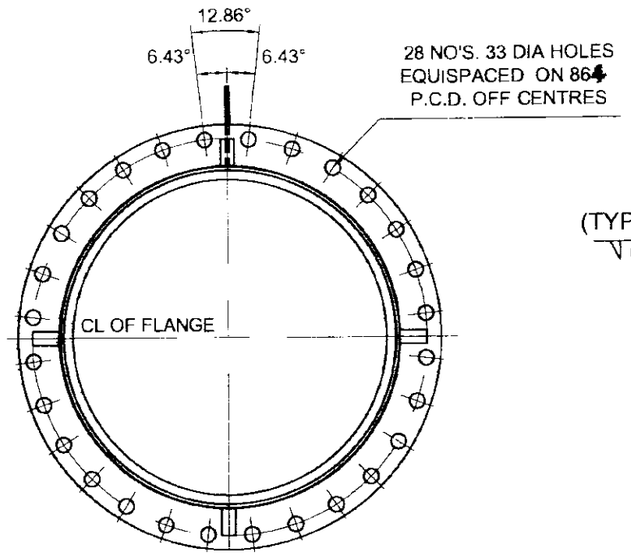

VIEW-SS

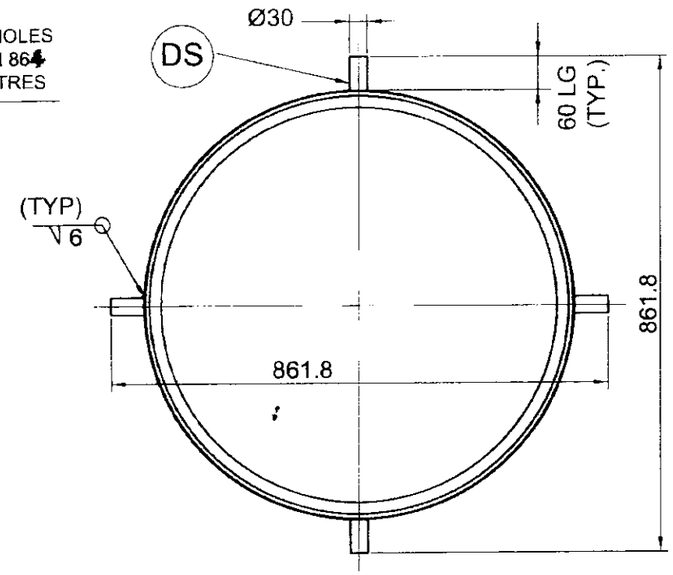

VIEW-RR

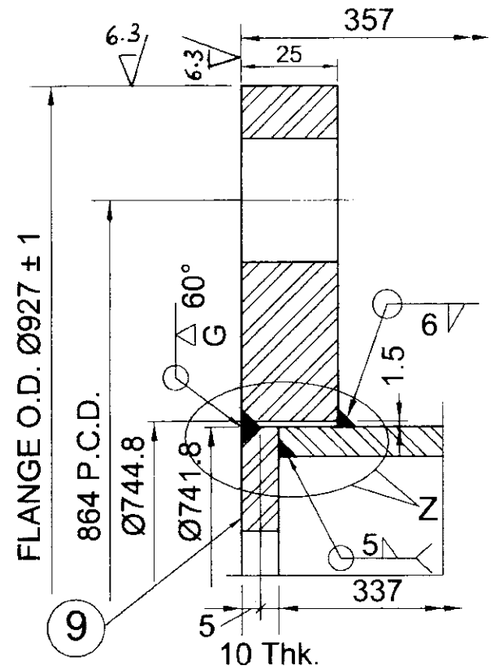

ENLARGED
SEC. DETAIL A - F_1

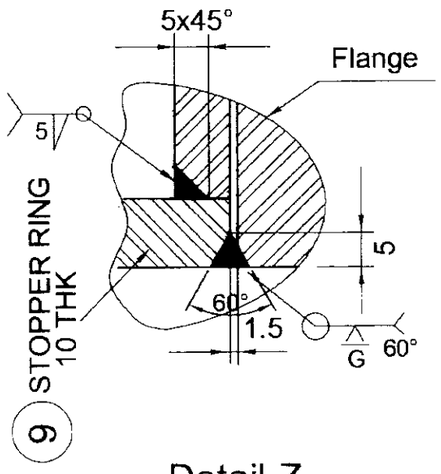

Detail-Z

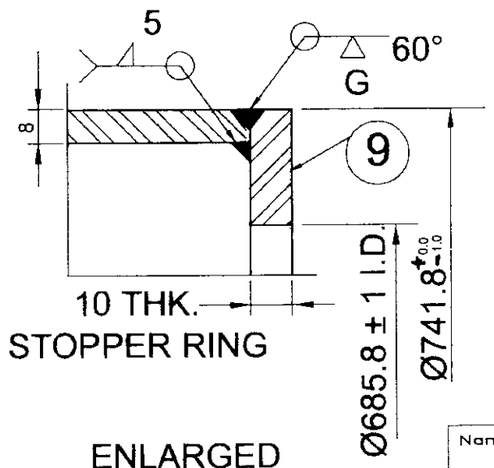

ENLARGED
SEC. DETL B - P

THE INFORMATION ON THIS DOCUMENT IS THE PROPERTY OF BHARAT HEAVY ELECTRICALS LIMITED., IT MUST NOT BE USED DIRECTLY OR INDIRECTLY IN ANY WAY DETRIMENTAL TO THE INTEREST OF THE COMPANY

REF. DRG. No.

SIGN AND DATE

Name of Customer/Project

BHARAT HEAVY ELECTRICALS LTD.,
ELECTROPORCELAINS DIVISION
BANGALORE - 560 012

	NAME	SIGN	DATE
DRN	Kaushik.K	-SD-	09-12-2016
CHD	M.Vinod	-SD-	10-11-2016
APPD	Felix.J	-SD-	10-11-2016

DEPT	GRADE OF TOL DIM	SCALE	WEIGHT (kg)	REF TO ASSY.DRG	ITEM No.	No.OF ITEMS
CODE	C/M/F	N.T.S.	— (Approx)	EL-DG-3-986-01-10180 7122 - Sheet 3		

TITLE: CASING FOR STRAIGHT PIPE - 700NB

CARD CODE

DRAWING No. 3-986-01-10181 REV. 01

SHEET No. 2 No.OF SHEETS 3

SUPERSEDES DRG. No.

SHT.24 SIZE A3 420 x 297

INVENTORY No.

REV	DATE	ALTERED / CHECKED	REV	DATE	ALTERED / CHECKED	REV	DATE	ALTERED / CHECKED

FIRST ANGLE PROJECTION

ALL DIMENSIONS ARE IN mm.

DRG No. 3-986-01-10181 REV 01

THE INFORMATION ON THIS DOCUMENT IS THE PROPERTY OF BHARAT HEAVY ELECTRICALS LIMITED., IT MUST NOT BE USED DIRECTLY OR INDIRECTLY IN ANY WAY DETRIMENTAL TO THE INTEREST OF THE COMPANY

REF. DRG. No.

SIGN AND DATE

NOTE:-

1. FOR CONSTRUCTION MATERIAL REFER TABLE-2
2. ALL SUPPLIES TO CONFORM CLN:QP:01/00. WELDING AS PER WP:CL001A & AWS:D 1.1.
3. DIMENSIONS INDICATED ARE FINISHED SIZE ONLY.
4. ASSEMBLY No., DU No., AND ARROW HEAD TO BE WELD DEPOSITED OVER CASING AS SHOWN , AS PER CE:1501:21
5. BASE PLATE FOR NAME PLATE TO BE WELDED ON TO CASING, AT LOCATION SHOWN,
   FOR BASE PLATE & WELDING DETAILS REF DRG : 4 986 99 07720
6. ALL OVER MACHINING 6.3 FOR STOPPER RINGS & SURFACE INDICATED FOR FLANGE AND PLAIN END.
7. A.H.S. =ARROW HEAD SIDE, T.E.S. = TAIL END SIDE, F= BOLTED FLANGE & P = PLAIN END.
8. FOR CASING Wt. REFER TABLE -1
   FOR Wt. OF LIFTING LUG, DRESSER STOPPER, STOPPER RINGS AND BOLTED FLANGE.
   REFER TABLE - 2
9. SURFACE PREPARATION AND PAINTING: REF PAINTING SCHEME DOC. No. : PS- L&T -KHARGONE BENDS / PIPES.
10. OVERALL PIPE TOLERANCE:-
    a]. AXIAL SHIFT: ± 3 MM
    b]. OUT OF SQUARENESS: ± 3 MM.
11. ALL WELD FILLETS ARE 6 mm, IF NOT SPECIFIED.

INVENTORY No.

REV	DATE	ALTERED / CHECKED	REV	DATE	ALTERED / CHECKED	REV	DATE	ALTERED / CHECKED

Name of Customer/Project

BHARAT HEAVY ELECTRICALS LTD.,
ELECTROPORCELAINS DIVISION
BANGALORE – 560 012

	NAME	SIGN	DATE
DRN	Kaushik.K	-SD-	09-12-2016
CHD	M.Vinod	-SD-	10-11-2016
APPD	Felix.J	-SD-	10-11-2016

DEPT / CODE	GRADE OF TOL DIM C/M/F	SCALE	WEIGHT (kg)	REF TO ASSY.DRG	ITEM No.	No.OF ITEMS
		N.T.S	— (Approx)	EL-DG-3-986-01-10180 7122 - Sheet 3		

TITLE: CASING FOR STRAIGHT PIPE - 700NB

CARD CODE

DRAWING No. 3-986-01-10181 REV. 01

SHEET No. 3 No.OF SHEETS 3

SUPERSEDES DRG. No.

SHT.24 SIZE A3 420 x 297

FIRST ANGLE PROJECTION

ALL DIMENSIONS ARE IN mm.

DRG No. 3-986-01-09861 REV 00

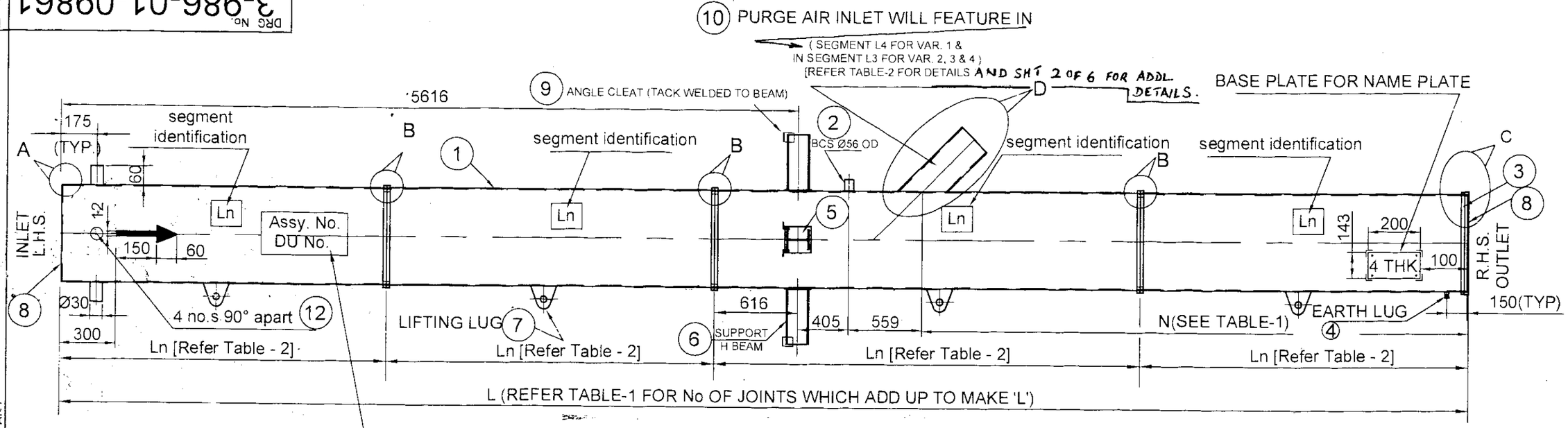

L = TOTAL LENGTH OF EACH PIPE
Ln = LENGTH OF SEGMENT (REFER TABLE-2)
V = SHOULDER FOR VICTAULIC COUPLING
P = PLAIN END
BCS = BOSS FOR COAL SAMPLING,
PAI = PURGE AIR INLET
L.H.S. = LEFT HAND SIDE
R.H.S. = RIGHT HAND SIDE
NOTE: M= (L-20mm) - 20mm = WIDTH OF 2 STOPPER RINGS AT TERMINAL ENDS

Sl. No.	Ln	Ln Dimension	L.H.S.	R.H.S.	REMARKS	Approx. Unit Wt. (kgs.)
8	L8	1622.1	B	C	—	251.1
7	L7	1622.1	B	B	—	257.3
6	L6	2144.2	B	C	—	326.7
5	L5	1044.2	B	C	—	167.4
4	L4	2444.2	B	C	WITH PURGE AIR INLET / BCS & SUPPORT BEAMS	433.6
3	L3	2500	B	B	WITH PURGE AIR INLET / BCS & SUPPORT BEAMS	447.9
2	L2	2500	B	B	—	384.4
1	L1	2500	A	B	—	378.6

TABLE - 2 (Segment Length details)

Var. No.	L	M*	N	Segment combination to form L REFER TABLE-2 FOR DETAILS	No. of Parts	END TYPE INLET	END CONNEC OUTLET
4	10744.2	10724.2	4164.2	L1+L2+L3+L7+L8	5	P	V
3	9644.2	9624.2	3064.2	L1+L2+L3+L6	4	P	V
2	8544.2	8524.2	1964.2	L1+L2+L3+L5	4	P	V
1	7444.2	7424.2	864.2	L1+L2+L4	3	P	V

TABLE - 1

THE INFORMATION ON THIS DOCUMENT IS THE PROPERTY OF BHARAT HEAVY ELECTRICALS LIMITED., IT MUST NOT BE USED DIRECTLY OR INDIRECTLY IN ANY WAY DETRIMENTAL TO THE INTEREST OF THE COMPANY

REF. DRG. No.

SIGN AND DATE

INVENTORY No.

REV	DATE	ALTERED / CHECKED	REV	DATE	ALTERED / CHECKED	REV	DATE	ALTERED / CHECKED

NAME OF CUSTOMER/PROJECT

BHARAT HEAVY ELECTRICALS LTD.,
ELECTROPORCELAINS DIVISION
BANGALORE – 560 012

	NAME	SIGN	DATE
DRN	S.Murali		30-01-2017
CHD	M.Vinod		30.01.2017
APPD	Felix.J		30.01.2017

DEPT CODE	GRADE OF TOL DIM C/M/F		SCALE N.T.S.	WEIGHT (kg) (Approx)	REF TO ASSY.DRG EL-DG-3-986-01-09860	ITEM No.	No.OF ITEMS

TITLE CASING FOR ST. PIPE - 700 NB WITH PAI

CARD CODE

DRAWING No. 3-986-01-09861 REV. 00

SHEET No. 1 No.OF SHEETS 6

SUPERSEDES DRG. No.

SHT.24 SIZE A3 420 x 297

FIRST ANGLE PROJECTION

ALL DIMENSIONS ARE IN mm.

DRG No. 3-986-01-09861 REV 00

THESE THREE ARE NOT IN SAME LINE AS SHOWN HERE.
REF ENLARGED SEC: RR FOR ORIENTATION OF BEAMS IN RELATION TO BCS (2) & PAI (10).

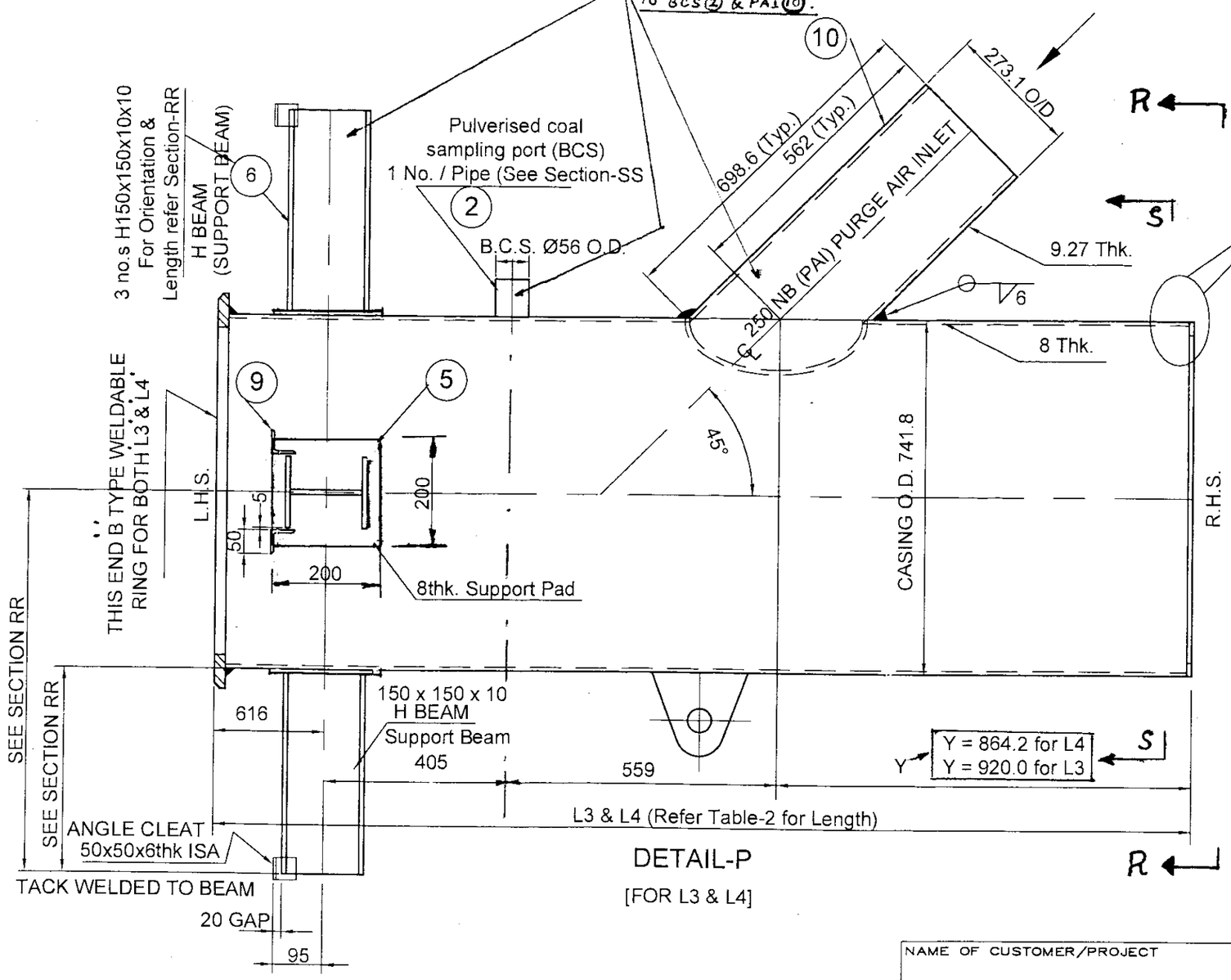

DETAIL-P

[FOR L3 & L4]

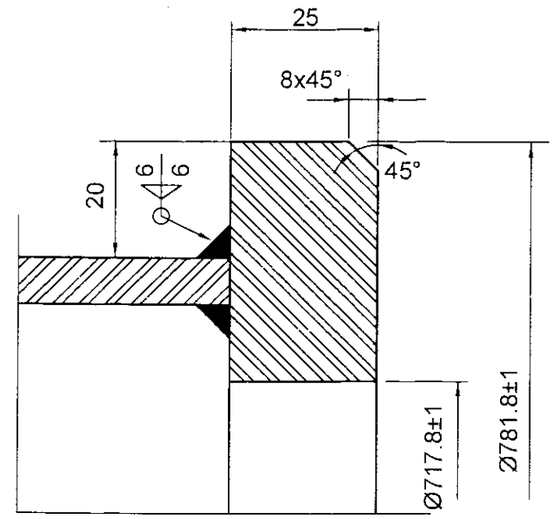

Enlarged Sectional Detail - B

THE INFORMATION ON THIS DOCUMENT IS THE PROPERTY OF BHARAT HEAVY ELECTRICALS LIMITED., IT MUST NOT BE USED DIRECTLY OR INDIRECTLY IN ANY WAY DETRIMENTAL TO THE INTEREST OF THE COMPANY

REF. DRG. No.

SIGN AND DATE

INVENTORY No.

REV	DATE	ALTERED / CHECKED	REV	DATE	ALTERED / CHECKED	REV	DATE	ALTERED / CHECKED

NAME OF CUSTOMER/PROJECT

BHARAT HEAVY ELECTRICALS LTD.,
ELECTROPORCELAINS DIVISION
BANGALORE – 560 012

	NAME	SIGN	DATE
DRN	S.Murali		30-01-2017
CHD	M.Vinod		30·1·17
APPD	Felix.J		30·1·2017

DEPT	GRADE OF TOL DIM	SCALE	WEIGHT (kg)	REF TO ASSY.DRG	ITEM No.	No.OF ITEMS
CDDE	C/M/F	N.T.S.	(Approx)	EL-DG-3-986-01-09860		

TITLE CASING FOR ST. PIPE - 700 NB WITH PAI

CARD CODE

DRAWING No. 3-986-01-09861 REV. 00

SHEET No. 2 No.OF SHEETS 6

SUPERSEDES DRG. No.

SHT.24 SIZE A3 420 x 297

FIRST ANGLE PROJECTION

ALL DIMENSIONS ARE IN mm.

DRG No. 3-986-01-09861 REV 00

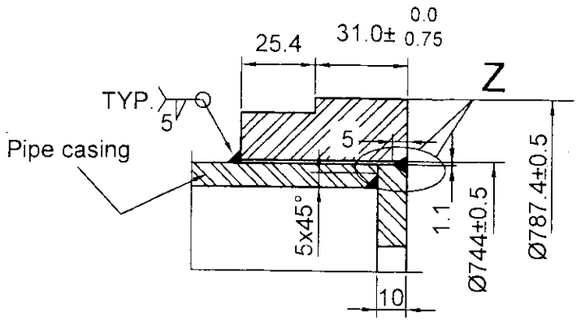

Enlarge Sectional Detail-C

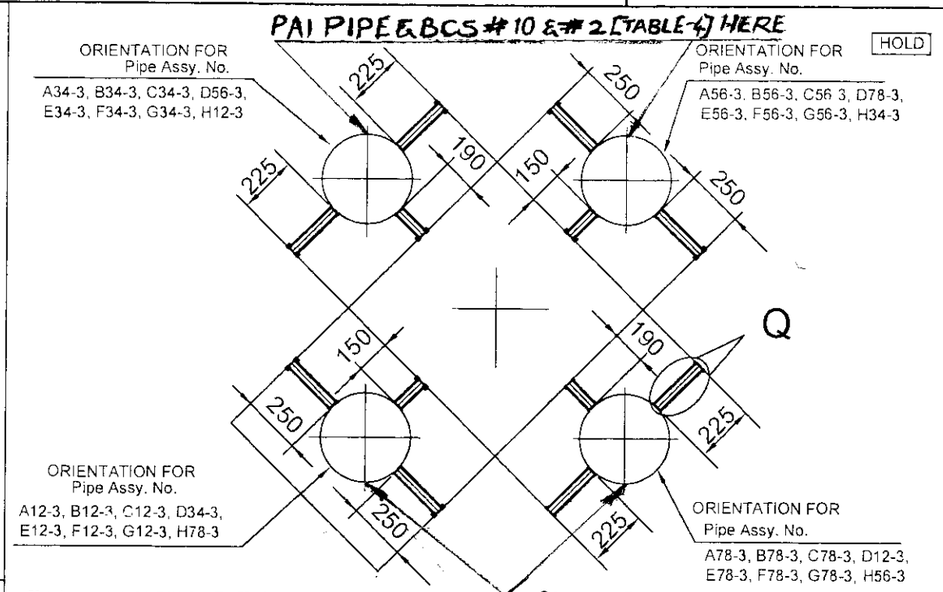

ENLARGED SECTION R-R

Typical Orientation detail for Support Pad with support lug and Angle cleat IN RELATION TO PAI & BCS.

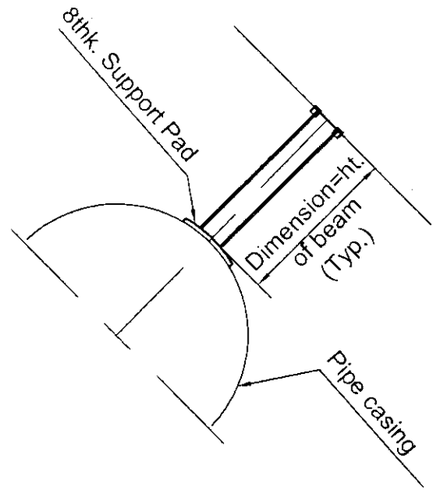

DETAIL-Q

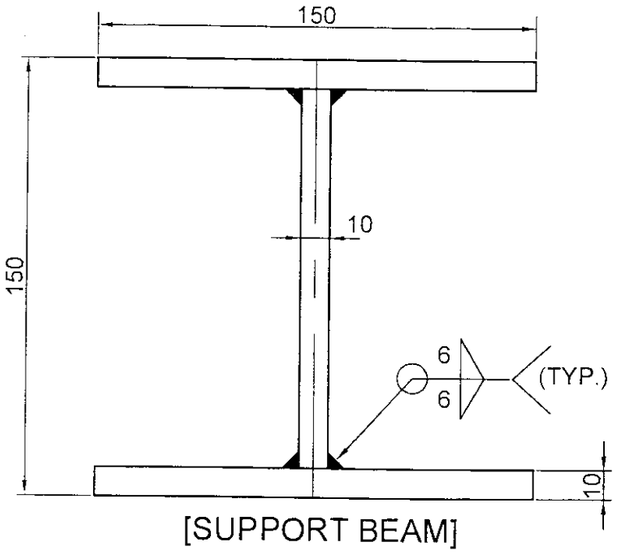

[SUPPORT BEAM] FABRICATED "H" SECTION DETAIL

QTY. - 03 NO.S / PIPE VARIANT

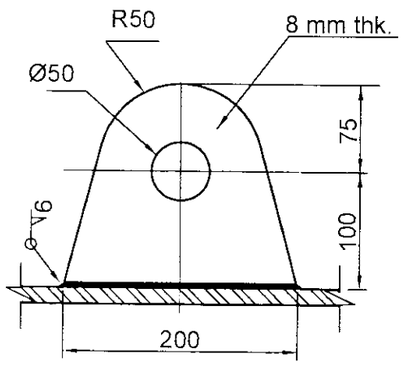

DETAIL OF LIFTING LUG

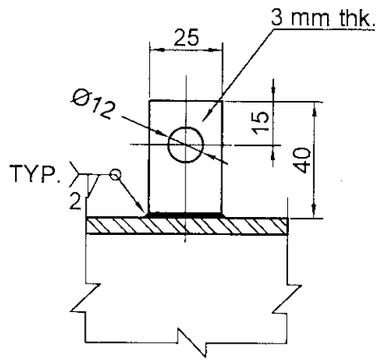

EARTH LUG DETAIL

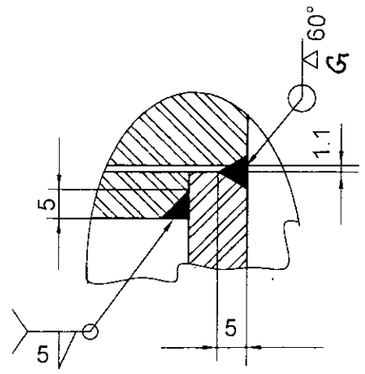

Detail-Z

NAME OF CUSTOMER/PROJECT

BHARAT HEAVY ELECTRICALS LTD., ELECTROPORCELAINS DIVISION BANGALORE – 560 012

	NAME	SIGN	DATE
DRN	S.Murali		30-01-2017
CHD	M.Vinod		30.1.17
APPD	Felix.J		30.1.17

DEPT	GRADE OF TOL DIM C/M/F	SCALE	WEIGHT (kg)	REF TO ASSY.DRG	ITEM No.	No.OF ITEMS
CODE		N.T.S.	(Approx)	EL-DG-3-986-01-09860		

TITLE: CASING FOR ST. PIPE - 700 NB WITH PAI

CARD CODE

DRAWING No. 3-986-01-09861 REV. 00

SHEET No. 3 No.OF SHEETS 6

SUPERSEDES DRG. No.

SHT.24 SIZE A3 420 x 297

REV	DATE	ALTERED / CHECKED	REV	DATE	ALTERED / CHECKED	REV	DATE	ALTERED / CHECKED

INVENTORY No.

SIGN AND DATE

REF. DRG. No.

THE INFORMATION ON THIS DOCUMENT IS THE PROPERTY OF BHARAT HEAVY ELECTRICALS LIMITED., IT MUST NOT BE USED DIRECTLY OR INDIRECTLY IN ANY WAY DETRIMENTAL TO THE INTEREST OF THE COMPANY

FIRST ANGLE PROJECTION

ALL DIMENSIONS ARE IN mm.

DRG No. 3-986-01-09861

REV 00

THE INFORMATION ON THIS DOCUMENT IS THE PROPERTY OF BHARAT HEAVY ELECTRICALS LIMITED., IT MUST NOT BE USED DIRECTLY OR INDIRECTLY IN ANY WAY DETRIMENTAL TO THE INTEREST OF THE COMPANY

REF. DRG. No.

SIGN AND DATE

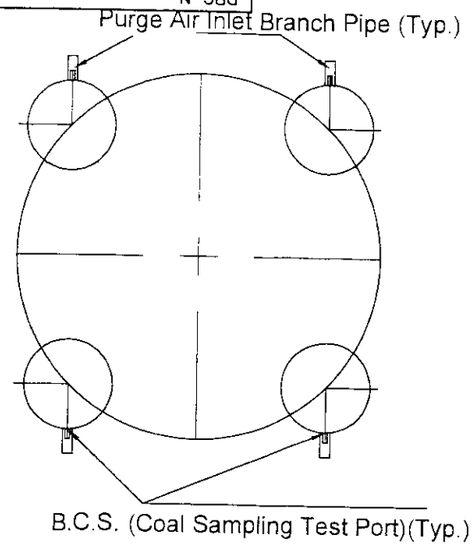

Enlarged Section-SS
TYPICAL ORIENTATION DETAIL FOR
COAL SAMPLING TAP AND PURGE AIR INLET BRANCH

HOLD

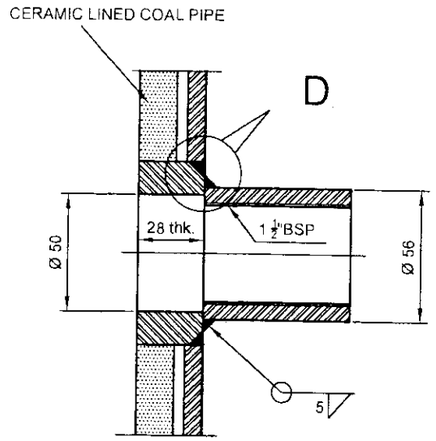

DETAIL-C
SOCKET FOR COAL SAMPLING

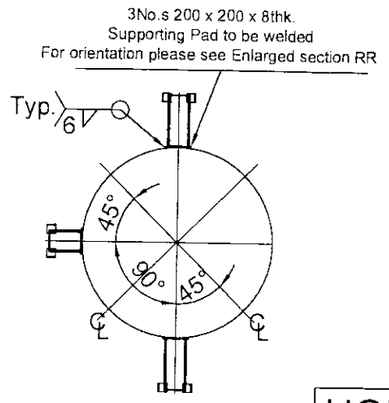

Welding Detail of
Support Pad with
Fabricated Support Beam

HOLD

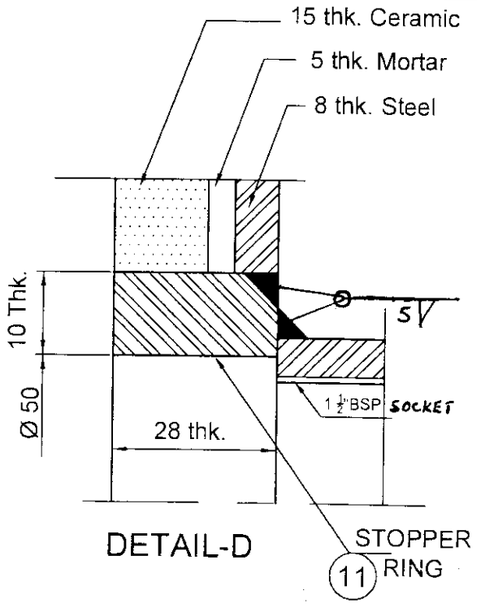

DETAIL-D

THIS BOM INDICATES ALL MATERIAL REQUIRED TO MAKE ONE DU NO. (TOTAL ASSEMBLY - L)

SL No.	Description	Size	Material	Qty. per Bend	Remarks
14	B type weldable ring	I.D. = 717.8 D.D.= 781.8	KILLED STEEL IS:2062 - 2011 E250 BR	4 No.s -Var.1 6 No.s -Var.2 & 3 8 No.s -Var.4	—
13	Base Plate for Name Plate	200 x 143 x 4thk.	KILLED STEEL IS:2062 - 2011 E250 BR	1 No.	—
12	Dresser Stopper	Ø30 x 60 Lg.	SAE -1018	4 No.s	—
11	Stopper Ring	10mm thk.	KILLED STEEL IS:2062 - 2011 E250 BR	1 No.	—
10	PAI Pipe	250 NB x SCH-40	SA -106 Gr.B	1 No.	—
9	Angle cleat	50 x 50 x 6thk. / 75LG.	KILLED STEEL IS:2062 - 2011 E250 BR	6 No.	—
8	Stopper Ring	10mm thk.	KILLED STEEL IS:2062 - 2011 E250 BR	2 No.	—
7	Lifting Lug	8mm thk.	KILLED STEEL IS:2062 - 2011 E250 BR	1 No./segment	—
6	Support Beam	150 x 150 x 10thk.	KILLED STEEL IS:2062 - 2011 E250 BR	3 No.s	—
5	Support Pad	200 x 200 x 8thk.	KILLED STEEL IS:2062 - 2011 E250 BR	3 No.s	—
4	Earth Lug	3mm thk.	KILLED STEEL IS:2062 - 2011 E250 BR	1 No.	—
3	Victualic Coupling Shoulder	O.D. 787.4 x I.D.744.0	KILLED STEEL IS:2062 - 2011 E250 BR	1 No.	FREE ISSUE BY BHEL
2	Coal sampling socket	—	KILLED STEEL IS:2062 - 2011 E250 BR	1 No.	FREE ISSUE BY BHEL
1	Casing	8 mm Thk.	KILLED STEEL IS:2062 - 2011 E250 BR	Refer table-1&2	—

TABLE-4 MATERIAL DETAIL

Var. No.	DU No.	Assembly No.	L	M	N	L.H.S. End connection terminal end	R.H.S. End connection terminal end	Qty.	Weight kg/Bend	
4	CLCP-017	D12-3,D34-3,D56-3,D78-3 H12-3,H34-3,H56-3,H78-3	10744.2	10724.2	4164.2	P	V	8	Refer Table-2	—
3	CLCP-016	C12-3,C34-3,C56-3,C78-3 G12-3,G34-3,G56-3,G78-3	9644.2	9624.2	3064.2	P	V	8	Refer Table-2	—
2	CLCP-015	B12-3,B34-3,B56-3,B78-3 F12-3,F34-3,F56-3,F78-3	8544.2	8524.2	1964.2	P	V	8	Refer Table-2	—
1	CLCP-003	A12-3,A34-3,A56-3,A78-3 E12-3,E34-3,E56-3,E78-3	7444.2	7424.2	864.2	P	V	8	Refer Table-2	—

TABLE-3 PIPE DETAIL w.r.t. Total Length - 'L', DU No. Assembly no., Qty. per assembly, etc

NAME OF CUSTOMER/PROJECT

INVENTORY No.

REV	DATE	ALTERED	REV	DATE	ALTERED	REV	DATE	ALTERED
		CHECKED			CHECKED			CHECKED

BHARAT HEAVY ELECTRICALS LTD.,
ELECTROPORCELAINS DIVISION
BANGALORE – 560 012

	NAME	SIGN	DATE
DRN	S.Murali		30-01-2017
CHD	M.Vinod		30-1-17
APPD	Felix.J		30-1-17

DEPT	GRADE OF TOL DIM		SCALE	WEIGHT (kg)	REF TO ASSY.DRG	ITEM No.	No.OF ITEMS
CODE	C/M/F		N.T.S.	(Approx)	EL-DG-3-986-01-09860		

TITLE CASING FOR ST. PIPE - 700 NB WITH PAI

CARD CODE

DRAWING No. 3-986-01-09861 REV. 00

SHEET No. 4 No.OF SHEETS 6

SUPERSEDES DRG. No.

SHT.24 SIZE A3 420 x 297

FIRST ANGLE PROJECTION

ALL DIMENSIONS ARE IN mm.

DRG No. 3-986-01-09861 REV 00

END DETAILS FOR SEGMENTS

FIG.1

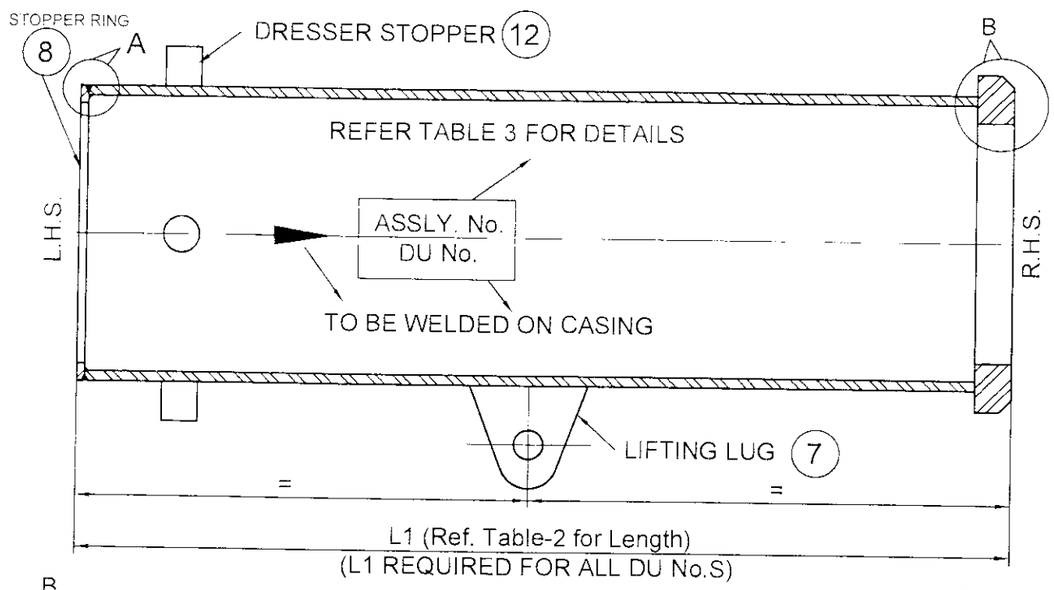

FIG.2

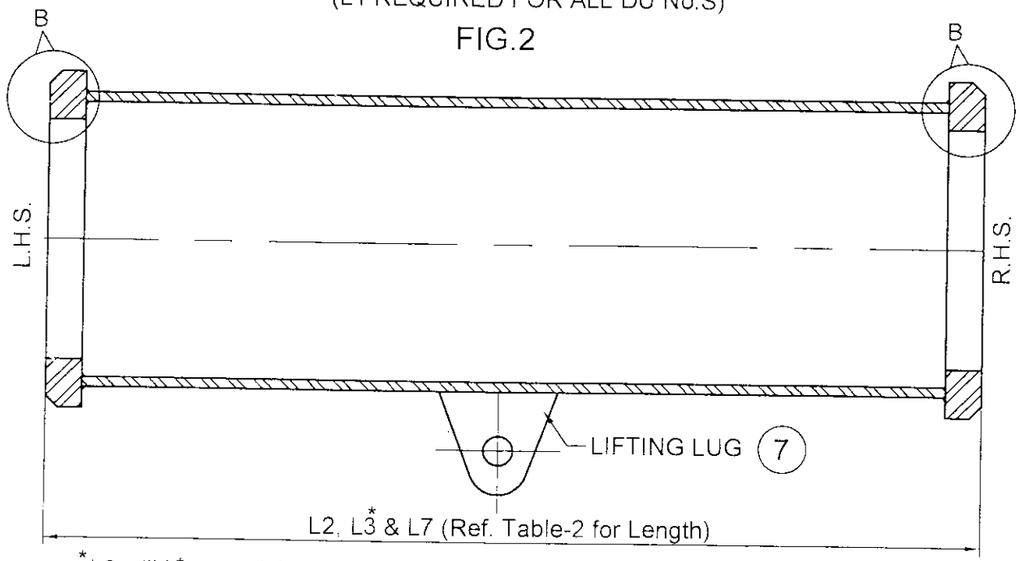

*L3 will have additional features :
Support Beams, Angle cleats,
BCS & PAI as per detail-'P'

L2 REQUIRED FOR ALL DU No.S
L3 REQUIRED FOR DU No.S CLCP-015, 016 & 017
L7 REQUIRED FOR DU No.S CLCP-017

FIG.3

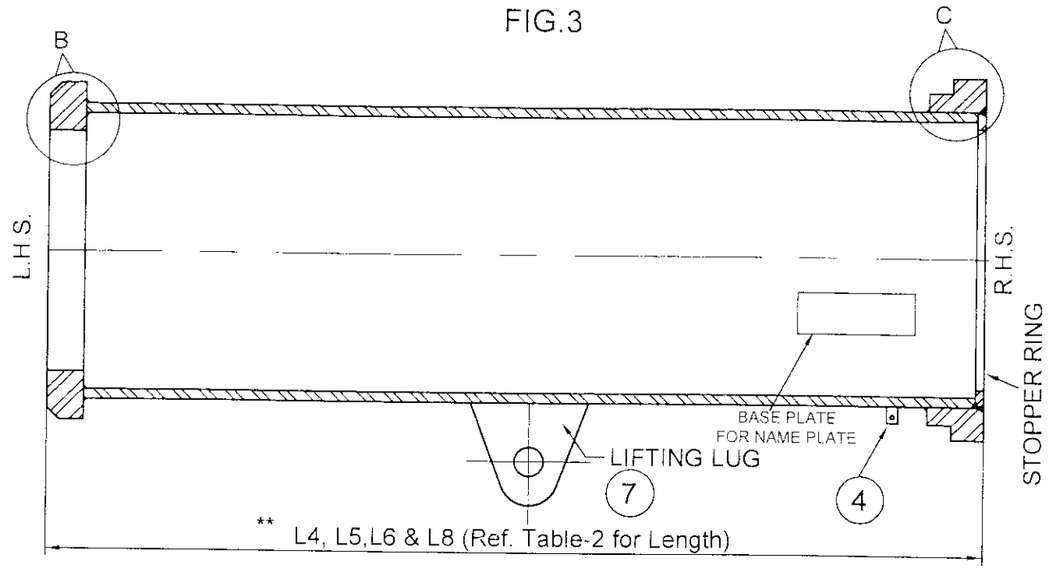

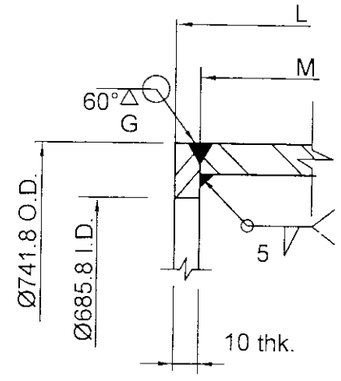

Enlarged Sectional Detail - A

** L4 will have additional features:
Support Beams, Angle cleats, BCS & PAI as per detail-P

L4 REQUIRED FOR DU No. CLCP 003
L5 REQUIRED FOR DU No. CLCP 015
L6 REQUIRED FOR DU No. CLCP 016
L8 REQUIRED FOR DU No. CLCP 017

THE INFORMATION ON THIS DOCUMENT IS THE PROPERTY OF BHARAT HEAVY ELECTRICALS LIMITED., IT MUST NOT BE USED DIRECTLY OR INDIRECTLY IN ANY WAY DETRIMENTAL TO THE INTEREST OF THE COMPANY

REF. DRG. No.

SIGN AND DATE

INVENTORY No.

REV	DATE	ALTERED / CHECKED	REV	DATE	ALTERED / CHECKED	REV	DATE	ALTERED / CHECKED

NAME OF CUSTOMER/PROJECT

BHARAT HEAVY ELECTRICALS LTD.,
ELECTROPORCELAINS DIVISION
BANGALORE – 560 012

	NAME	SIGN	DATE
DRN	S.Murali		30-01-2017
CHD	M.Vinod		30-1-17
APPD	Felix.J		30-1-17.

DEPT / CODE	GRADE OF TOL DIM C/M/F		SCALE	WEIGHT (kg)	REF TO ASSY.DRG	ITEM No.	No.OF ITEMS
			N.T.S.	(Approx)	EL-DG-3-986-01-09860		

TITLE: CASING FOR ST. PIPE - 700 NB WITH PAI

CARD CODE

DRAWING No. 3-986-01-09861 REV. 00

SHEET No. 5 No.OF SHEETS 6

SUPERSEDES DRG. No.

SHT.24 SIZE A3 420 x 297

FIRST ANGLE PROJECTION

ALL DIMENSIONS ARE IN mm.

DRG No. 3-986-01-09861 REV 00

NOTE:-

1. FOR CONSTRUCTION MATERIAL REFER TABLE-4
2. ALL SUPPLIES TO CONFORM CLN:QP:01/00. WELDING AS PER WP:CL001A & AWS:D 1.1.
3. DIMENSIONS INDICATED ARE FINISHED SIZE ONLY.
4. ASSEMBLY No., DU No., AND ARROW HEAD TO BE WELD DEPOSITED OVER CASING AS SHOWN , AS PER CE:1501:21
5. BASE PLATE FOR NAME PLATE TO BE WELDED ON TO CASING, AT LOCATION SHOWN,
   FOR BASE PLATE & WELDING DETAILS REF DRG : 4 986 99 07720
6. ALL OVER MACHINING 6.3 ▽ FOR STOPPER RINGS & 'B' TYPE RINGS.
7. ALL DIAMETERS TO BE CONCENTRIC TO EACH OTHER.
8. FOR TOTAL WT. OF PIPE SEGMENT CASING, REFER TABLE-2. THIS WEIGHT INCLUDES WEIGHT OF ALL ITEMS LIKE STOPPER RINGS, 'B' TYPE RINGS,
   LIFTING LUG, EARTH LUG, SUPPORT PADS, SUPPORT BEAMS, ANGLE CLEATS, PAI PIPE, DRESSER STOPPER, BASE PLATE
   FOR NAME PLATE, WHICHEVER APPLICABLE.
9. CONTROL DURING WELDING OF SHOULDER TO CASING :-
   a] OVALITY OF CASING ON OUTER DIAMETER TO BE MAINTAINED WITHIN 1.0 MM
   b] WELDING OF SHOULDER TO CASING AS PER DETAIL-C, TO BE DONE IN SUCH A WAY AS TO ENSURE THAT DISTORTION OF COLLAR IS LIMITED SUCH THAT DIM Ø787.4 mm IS STRICTLY WITHIN THE TOLERANCE SPECIFIED IN SHT 3 OF 6.
   VENDOR TO DO THE NEEDFUL TO ACHIEVE 9(a) AND 9(b).
10. SURFACE PREPARATION AND PAINTING: REF PAINTING SCHEME DOC. No. : PS- L&T - TANDA. BENDS / PIPES.
11. OVERALL PIPE TOLERANCE:-
    a]. AXIAL SHIFT: ± 1.5 MM
    b]. OUT OF SQUARENESS: ± 1.5 MM.
12. ALL WELD FILLETS ARE 6 mm. IF NOT SPECIFIED.
13. WELDING OF SEGMENTS TO ACHIEVE TOTAL 'L' WILL BE DONE AT BHEL WORKS OR SUITABLE PREMISES.
14. SEGMENT No: Ex: "L1" OR "L2" OR "L3", etc.; AS APPLICABLE; TO BE WELD DEPOSITED ON CASING, WHERE SHOWN AS "SEGMENT IDENTFICATION"

THE INFORMATION ON THIS DOCUMENT IS THE PROPERTY OF BHARAT HEAVY ELECTRICALS LIMITED., IT MUST NOT BE USED DIRECTLY OR INDIRECTLY IN ANY WAY DETRIMENTAL TO THE INTEREST OF THE COMPANY

REF. DRG. No.

SIGN AND DATE

INVENTORY No.

REV	DATE	ALTERED / CHECKED	REV	DATE	ALTERED / CHECKED	REV	DATE	ALTERED / CHECKED

NAME OF CUSTOMER/PROJECT

BHARAT HEAVY ELECTRICALS LTD.,
ELECTROPORCELAINS DIVISION
BANGALORE – 560 012

	NAME	SIGN	DATE
DRN	S.Murali		30-01-2017
CHD	M.Vinod		30.1.17
APPD	Felix.J		30-1-17

DEPT / CODE	GRADE OF TOL DIM C/M/F		SCALE N.T.S.	WEIGHT (kg) (Approx)	REF TO ASSY.DRG EL-DG-3-986-01-09860	ITEM No.	No.OF ITEMS

TITLE: CASING FOR ST. PIPE - 700 NB WITH PAI

CARD CODE

DRAWING No. 3-986-01-09861 REV. 00

SHEET No. 6 No.OF SHEETS 6

SUPERSEDES DRG. No.

SHT.24 SIZE A3 420 x 297

FIRST ANGLE PROJECTION

ALL DIMENSIONS ARE IN mm.

DRG No. 3-986-01-09811 REV 01

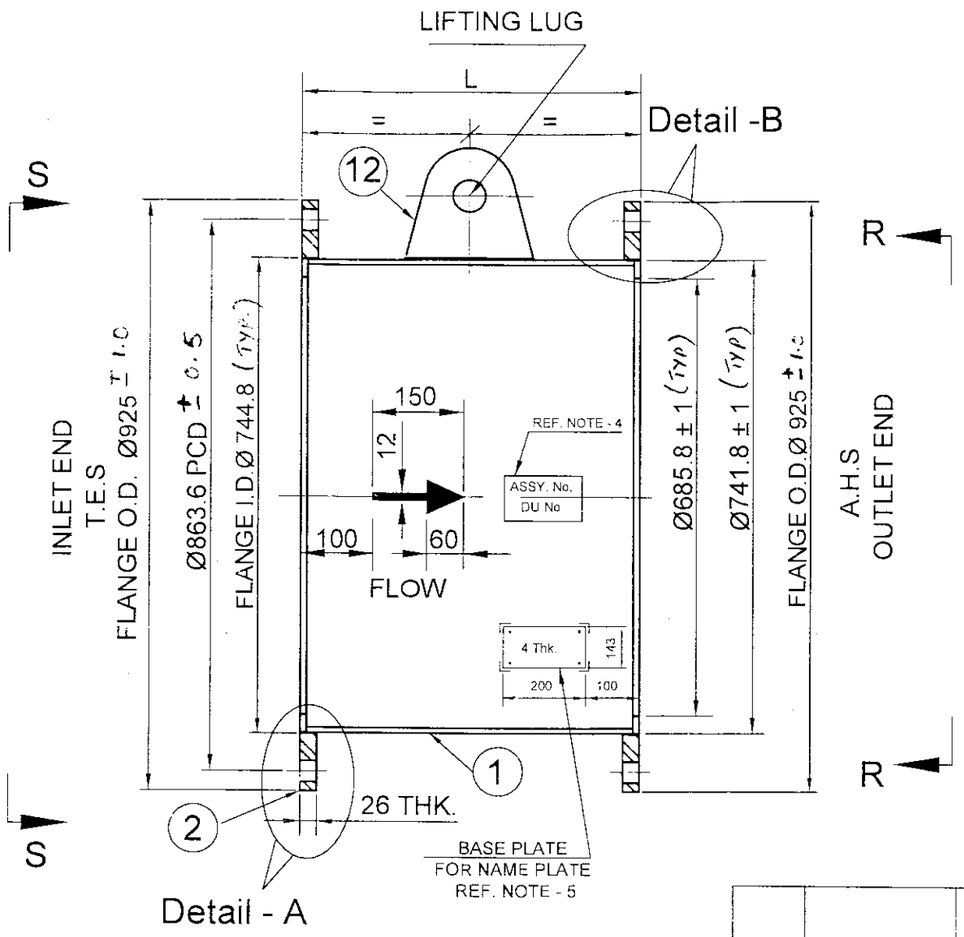

SECTIONED VIEW

SL No.	Description	Size	Material	Qty. per Bend	Wt. / Piece (Kgs.)	Remarks
13	Stopper Ring	10 mm Thk.	IS:2062 - 2011 E250 BR KILLED STEEL	2 No's.	4.9	
12	Lifting Lug	8 mm Thk.	IS:2062 - 2011 E250 BR KILLED STEEL	1 No.	1.3	
11	Washer	–	IS:2016	56 No's.	–	NOT IN SCOPE OF VENDOR
10	Hex. Nut	–	IS:1367 (PART-3) Gr. 4.6	28 No's.	–	NOT IN SCOPE OF VENDOR
9	Hex. Bolt	–	IS:1367 (PART-3) Gr. 4.6	28 No's.	–	NOT IN SCOPE OF VENDOR
8	Gasket	–	NON - ASBESTOS	1 No.	–	NOT IN SCOPE OF VENDOR
7	Outlet Flange (26 thk.)	O.D 925 x ID 744.8	IS:2062 - 2011 E250 BR KILLED STEEL	1 No.	43.5	
6	Washer	–	IS:2016	56 No's.	–	NOT IN SCOPE OF VENDOR
5	Hex. Nut	–	IS:1367 (PART-3) Gr. 4.6	28 No's.	–	NOT IN SCOPE OF VENDOR
4	Hex. Bolt	–	IS:1367 (PART-3) Gr. 4.6	28 No's.	–	NOT IN SCOPE OF VENDOR
3	Gasket	–	NON - ASBESTOS	1 No.	–	NOT IN SCOPE OF VENDOR
2	Inlet Flange (26 thk.)	O.D 925 x ID 744.8	IS:2062 - 2011 E250 BR KILLED STEEL	1 No.	43.5	
1	Casing	8 mm Thk.	IS:2062 - 2011 E250 BR KILLED STEEL	1 No.	Refer Table - 1	

TABLE - 2 PULVERISED COAL BEND PIPE MATERIAL DETAIL

VAR. No.	DU No.	Assembly No.	L	M	END CONNECTION INLET SIDE	END CONNECTION OUTLET SIDE	Qty No's per Unit	Wt. (kgs.)/ Pipe
01	CLCP-001	H56-1,H78-1, F12-1,F34-1,F56-1,F78-1,G12-1,G34-1G56-1,G78-1,H12-1,H34-1, C56-1,C78-1,D12-1,D34-1,D56-1,D78-1,E12-1,E34-1,E56-1,E78-1, A12- 1,A34-1,A56-1,A78-1,B12-1,B34-1,B-56-1,B78-1,C12-1,C34-1,	501	481	F	F	32	70.6

TABLE - 1

THE INFORMATION ON THIS DOCUMENT IS THE PROPERTY OF BHARAT HEAVY ELECTRICALS LIMITED., IT MUST NOT BE USED DIRECTLY OR INDIRECTLY IN ANY WAY DETRIMENTAL TO THE INTEREST OF THE COMPANY

REF. DRG. No.

SIGN AND DATE

INVENTORY No.

REV	DATE	ALTERED	REV	DATE	ALTERED	REV	DATE	ALTERED	V.M
		CHECKED			CHECKED	01	15-12-16	CHECKED	J.F

NOTE:-
TABLE 1 & 2 MODIFIED
DETAIL 'B' - PLAIN END CHANGED TO FLANGED END. DIM 'L' & 'M', NOTES CHANGED.
REFER RR-2346

Name of Customer/Project

BHARAT HEAVY ELECTRICALS LTD.,
ELECTROPORCELAINS DIVISION
BANGALORE – 560 012

	NAME	SIGN	DATE
DRN	Arasan	-SD-	03-06-2016
CHD	M.Vinod	-SD-	31-07-2016
APPD	Felix.J	-SD-	31-07-2016

DEPT CODE	GRADE OF TOL DIM C/M/F	SCALE	WEIGHT (kg)	REF TO ASSY.DRG	ITEM No.	No.OF ITEMS
		N.T.S.	– (Approx)	EL-DG-3-986-01-09810 7122 - Sheet 1		

TITLE
CASING FOR STRAIGHT PIPE - 700NB

CARD CODE

DRAWING No. 3-986-01-09811 REV. 01

SHEET No. 1 No.OF SHEETS 3

SUPERSEDES DRG. No.

SHT.24 SIZE A3 420 x 297

FIRST ANGLE PROJECTION

ALL DIMENSIONS ARE IN mm.

DRG No. 3-986-01-09811 REV 01

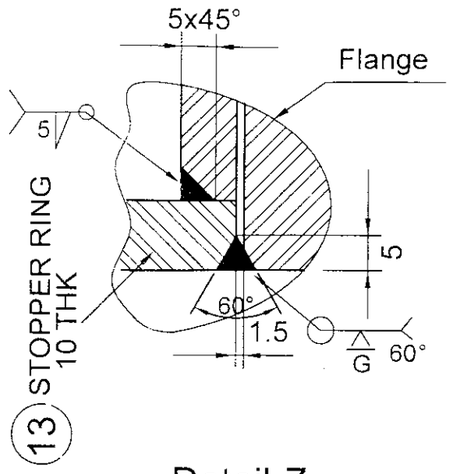

Detail-Z

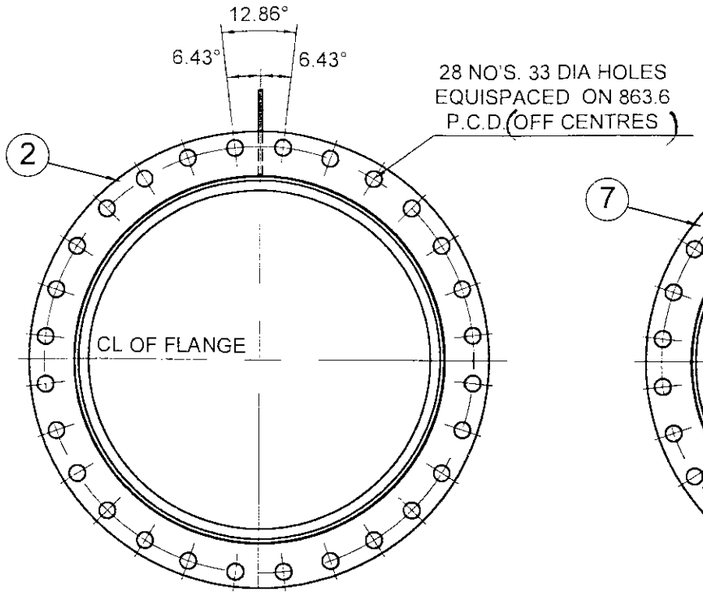

VIEW-SS

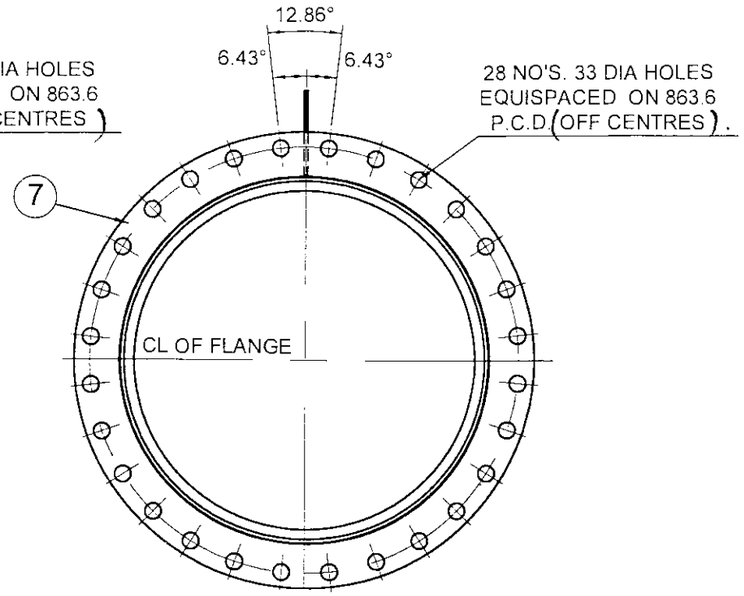

VIEW-RR

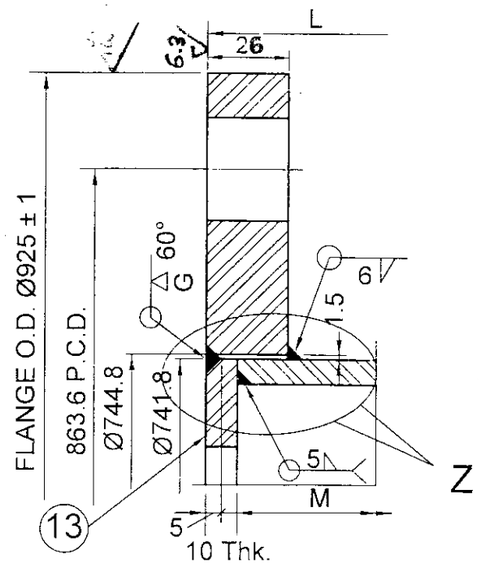

ENLARGED
SEC. DETAIL A

Z

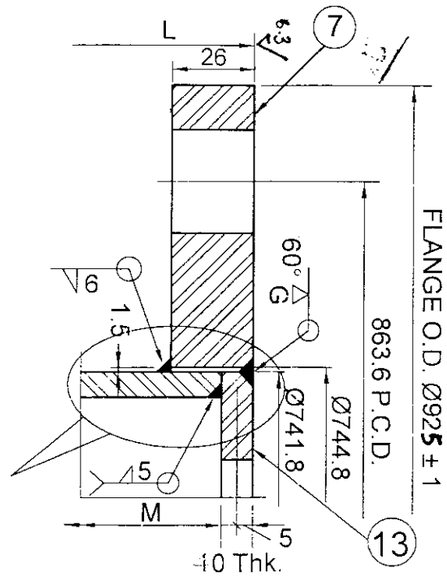

ENLARGED
SEC. DETAIL B

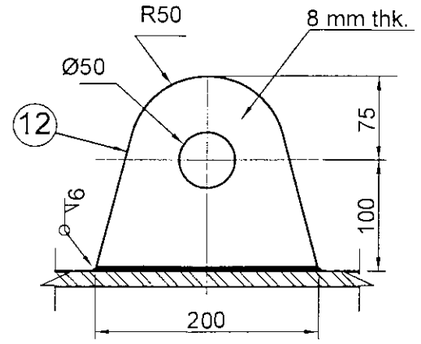

DETAIL OF
LIFTING LUG

THE INFORMATION ON THIS DOCUMENT IS THE PROPERTY OF BHARAT HEAVY ELECTRICALS LIMITED., IT MUST NOT BE USED DIRECTLY OR INDIRECTLY IN ANY WAY DETRIMENTAL TO THE INTEREST OF THE COMPANY

REF. DRG. No.

SIGN AND DATE

INVENTORY No.

REV	DATE	ALTERED / CHECKED	REV	DATE	ALTERED / CHECKED	REV	DATE	ALTERED / CHECKED

Name of Customer/Project

BHARAT HEAVY ELECTRICALS LTD.,
ELECTROPORCELAINS DIVISION
BANGALORE – 560 012

	NAME	SIGN	DATE
DRN	Arasan	-SD-	03-06-2016
CHD	M.Vinod	-SD-	31-07-2016
APPD	Felix.J	-SD-	31-07-2016

DEPT / CODE	GRADE OF TOL DIM C/M/F	SCALE	WEIGHT (kg)	REF TO ASSY.DRG	ITEM No.	No.OF ITEMS
		N.T.S.	-- (Approx)	EL-DG-3-986-01-09810 7122 - Sheet 1		

TITLE: CASING FOR STRAIGHT PIPE - 700NB

CARD CODE

DRAWING No. 3-986-01-09811 REV. 01

SHEET No. 2 No.OF SHEETS 3

SUPERSEDES DRG. No.

SHT.24 SIZE A3 420 x 297

FIRST ANGLE PROJECTION

ALL DIMENSIONS ARE IN mm.

DRG No. 3-986-01-09811 REV 01

NOTE:-

1. FOR CONSTRUCTION MATERIAL REFER TABLE-2
2. ALL SUPPLIES TO CONFORM CLN:QP:01/00. WELDING AS PER WP:CL001A & AWS:D 1.1.
3. DIMENSIONS INDICATED ARE FINISHED SIZE ONLY.
4. ASSEMBLY No., DU No., AND ARROW HEAD TO BE WELD DEPOSITED OVER CASING AS SHOWN , AS PER CE:1501:21
5. BASE PLATE FOR NAME PLATE TO BE WELDED ON TO CASING, AT LOCATION SHOWN,
   FOR BASE PLATE & WELDING DETAILS REF DRG : 4 986 99 07720
6. ALL OVER MACHINING 6.3 FOR STOPPER RINGS AND SURFACE INDICATED FOR FLANGES.
7. A.H.S. =ARROW HEAD SIDE, T.E.S. = TAIL END SIDE, F= BOLTED FLANGE.
8. FOR CASING Wt. REFER TABLE -1
   FOR Wt. OF LIFTING LUG, STOPPER RINGS AND BOLTED FLANGE.
   REFER TABLE - 2
9. SURFACE PREPARATION AND PAINTING: REF PAINTING SCHEME DOC. No. : PS- L&T - TANDA. BENDS / PIPES.
10. OVERALL PIPE TOLERANCE:-
    a]. AXIAL SHIFT: ± 3 MM
    b]. OUT OF SQUARENESS: ± 3 MM.
11. ALL WELD FILLETS ARE 6 mm, IF NOT SPECIFIED.

THE INFORMATION ON THIS DOCUMENT IS THE PROPERTY OF BHARAT HEAVY ELECTRICALS LIMITED., IT MUST NOT BE USED DIRECTLY OR INDIRECTLY IN ANY WAY DETRIMENTAL TO THE INTEREST OF THE COMPANY

REF. DRG. No.

SIGN AND DATE

INVENTORY No.

REV	DATE	ALTERED / CHECKED	REV	DATE	ALTERED / CHECKED	REV	DATE	ALTERED / CHECKED

Name of Customer/Project

BHARAT HEAVY ELECTRICALS LTD.,
ELECTROPORCELAINS DIVISION
BANGALORE – 560 012

	NAME	SIGN	DATE
DRN	Arasan	-SD-	03-06-2016
CHD	M.Vinod	-SD-	31-07-2016
APPD	Felix.J	-SD-	31-07-2016

DEPT / CODE	GRADE OF TOL DIM C/M/F	SCALE	WEIGHT (kg)	REF TO ASSY.DRG	ITEM No.	No.OF ITEMS
		N.T.S.	– (Approx)	EL-DG-3-986-01-09810 7122 - Sheet 1		

TITLE: CASING FOR STRAIGHT PIPE - 700NB

CARD CODE

DRAWING No. 3-986-01-09811 REV. 01

SHEET No. 3 No.OF SHEETS 3

SUPERSEDES DRG. No.

SHT.24 SIZE A3 420 x 297

FIRST ANGLE PROJECTION

ALL DIMENSIONS ARE IN mm.

DRG No. 3-986-01-09821 REV 0

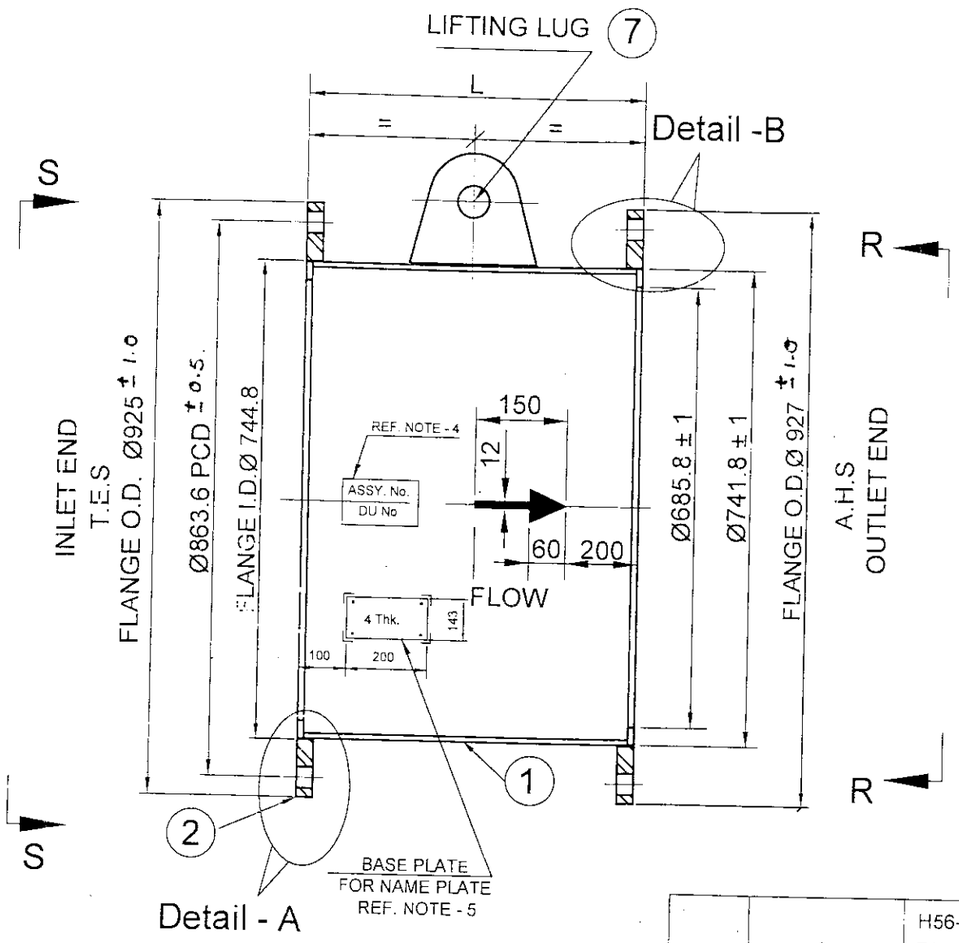

SECTIONED VIEW

SL No.	Description	Size	Material	Qty. per Bend	Wt. / Piece (Kgs.)	Remarks
13	Washer	–	IS:2016	56 No's.	–	NOT IN SCOPE OF VENDOR
12	Hex. Nut	–	IS:1367 (PART-3) Gr. 4.6	28 No's.	–	NOT IN SCOPE OF VENDOR
11	Hex. Bolt	–	IS:1367 (PART-3) Gr. 4.6	28 No's.	–	NOT IN SCOPE OF VENDOR
10	Gasket	–	NON - ASBESTOS	1 No.	–	NOT IN SCOPE OF VENDOR
9	Outlet Flange (25 thk.)	O.D 927 x ID 744.8	IS:2062 - 2011 E250 BR KILLED STEEL	1 No.	–	FREE ISSUE FROM BHEL
8	Stopper Ring	10 mm Thk.	IS:2062 - 2011 E250 BR KILLED STEEL	2 No's.	4.9	
7	Lifting Lug	8 mm Thk.	IS:2062 - 2011 E250 BR KILLED STEEL	1 No.	1.3	
6	Washer	–	IS:2016	56 No's.	–	NOT IN SCOPE OF VENDOR
5	Hex. Nut	–	IS:1367 (PART-3) Gr. 4.6	28 No's.	–	NOT IN SCOPE OF VENDOR
4	Hex. Bolt	–	IS:1367 (PART-3) Gr. 4.6	28 No's.	–	NOT IN SCOPE OF VENDOR
3	Gasket	–	NON - ASBESTOS	1 No.	–	NOT IN SCOPE OF VENDOR
2	Inlet Flange (26 thk.)	O.D 925 x ID 744.8	IS:2062 - 2011 E250 BR KILLED STEEL	1 No.	43.5	
1	Casing	8 mm Thk.	IS:2062 - 2011 E250 BR KILLED STEEL	1 No.	Refer Table - 1	

TABLE - 2 PULVERISED COAL BEND PIPE MATERIAL DETAIL

VAR. No.	DU No.	Assembly No.	L	M	END CONNECTION INLET SIDE	END CONNECTION OUTLET SIDE	Qty No's per Unit	Wt. (kgs.)/ Pipe
01	CLCP-002	H56-2,H78-2, F12-2,F34-2,F56-2,F78-2,G12-2,G34-2,G56-2,G78-2,H12-2,H34-2, C56-2,C78-2,D12-2,D34-2,D56-2,D78-2,E12-2,E34-2,E56-2,E78-2, A12-2,A34-2,A56-2,A78-2,B12-2,B34-2,B-56-2,B78-2,C12-2,C34-2,	400	380	F	F_1	32	56.0

TABLE - 1

Name of Customer/Project

BHARAT HEAVY ELECTRICALS LTD.,
ELECTROPORCELAINS DIVISION
BANGALORE – 560 012

	NAME	SIGN	DATE
DRN	Arasan	-SD-	03-06-2016
CHD	M.Vinod	-SD-	31-07-2016
APPD	Felix.J	-SD-	31-07-2016

DEPT	GRADE OF TOL DIM	SCALE	WEIGHT (kg)	REF TO ASSY.DRG	ITEM No.	No.OF ITEMS
CODE	C/M/F	N.T.S.	— (Approx)	EL-DG-3-986-01-09820 7122 - Sheet 2		

TITLE: CASING FOR STRAIGHT PIPE - 700NB

CARD CODE

DRAWING No. 3-986-01-09821 REV. 02

SHEET No. 1 No.OF SHEETS 3

SUPERSEDES DRG. No.

SHT.24 SIZE A3 420 x 297

REV	DATE	ALTERED / CHECKED
02	28.2.17	ALTERED M.V / CHECKED J.F
01	15-12-16	ALTERED M.V / CHECKED J.F

FLANGE 'F1' IS FREE ISSUE FROM BHEL. IT IS NOT IN SCOPE OF CASING VENDOR. WT. OF 'F1' FLANGE DELETED FROM TABLE-2. REF RR 2282

NOTE- TABLE 1 & 2 MODIFIED. DETAIL 'A' - PLAIN END CHANGED TO FLANGED END. DIM. 'L' & 'M' & NOTES CHANGED

REFER RR-2347

INVENTORY No. | SIGN AND DATE | REF. DRG. No.

THE INFORMATION ON THIS DOCUMENT IS THE PROPERTY OF BHARAT HEAVY ELECTRICALS LIMITED. IT MUST NOT BE USED DIRECTLY OR INDIRECTLY IN ANY WAY DETRIMENTAL TO THE INTERESTS OF THE COMPANY

FIRST ANGLE PROJECTION

ALL DIMENSIONS ARE IN mm.

DRG No. 3-986-01-09821 REV 02

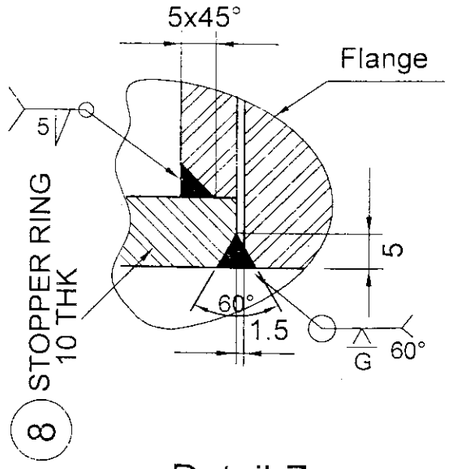

Detail-Z

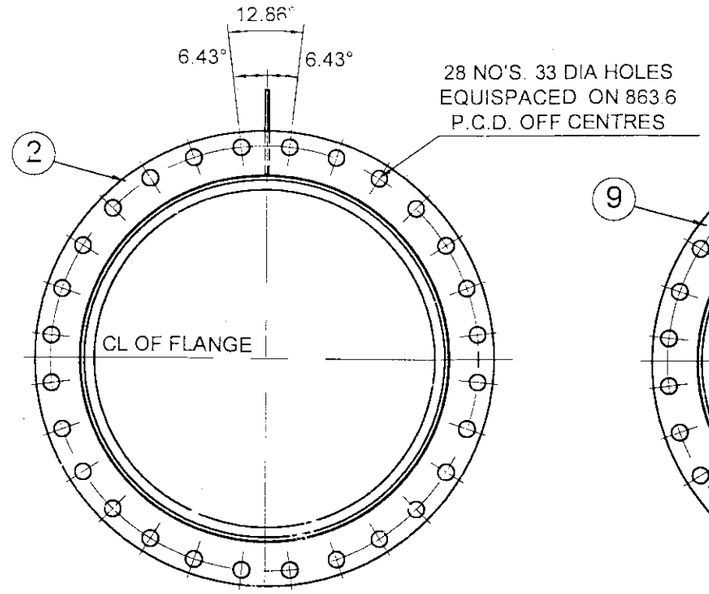

VIEW-SS

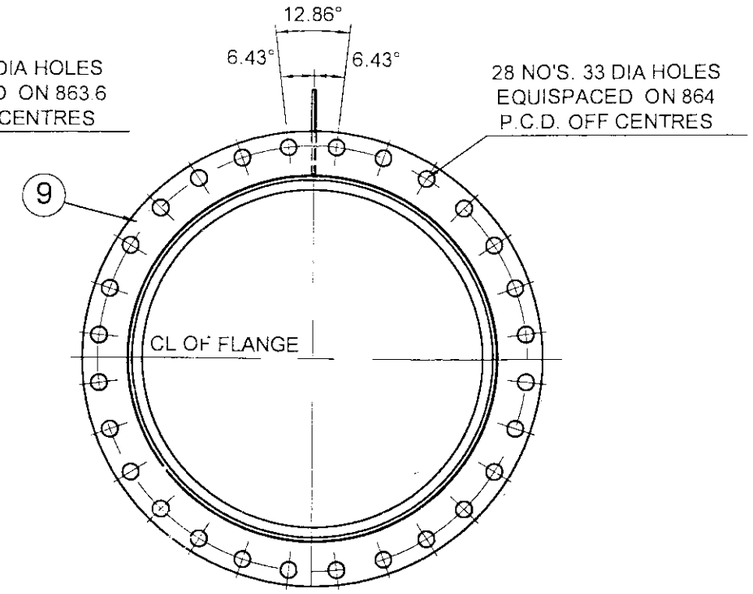

VIEW-RR

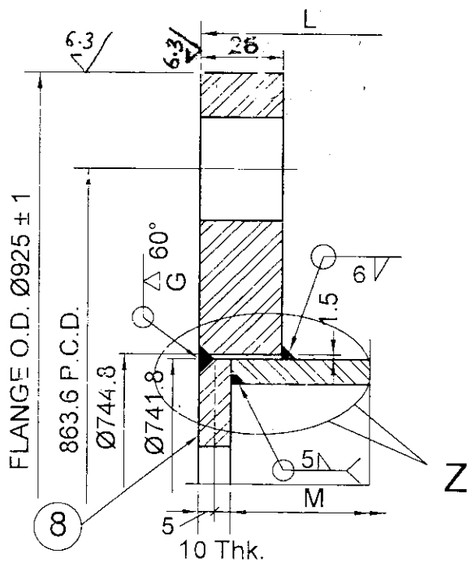

ENLARGED SEC. DETAIL A-F

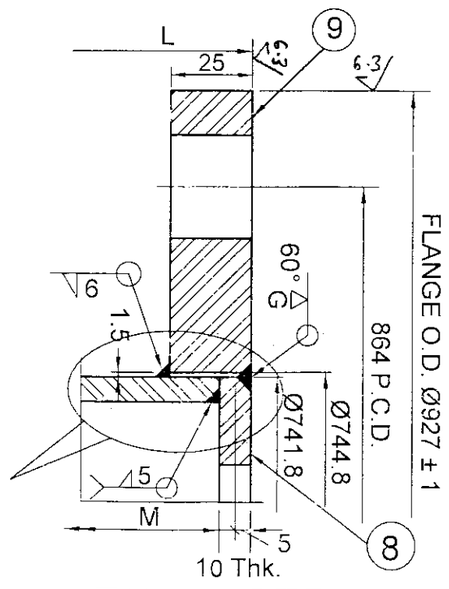

ENLARGED SEC. DETAIL B-F_1

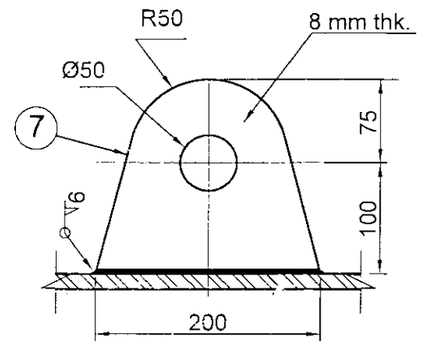

DETAIL OF LIFTING LUG

THE INFORMATION ON THIS DOCUMENT IS THE PROPERTY OF BHARAT HEAVY ELECTRICALS LIMITED., IT MUST NOT BE USED DIRECTLY OR INDIRECTLY IN ANY WAY DETRIMENTAL TO THE INTEREST OF THE COMPANY

REF. DRG. No.

SIGN AND DATE

INVENTORY No.

REV	DATE	ALTERED / CHECKED	REV	DATE	ALTERED / CHECKED	REV	DATE	ALTERED / CHECKED

Name of Customer/Project

BHARAT HEAVY ELECTRICALS LTD.,
ELECTROPORCELAINS DIVISION
BANGALORE – 560 012

	NAME	SIGN	DATE
DRN	Arasan	-SD-	03-06-2016
CHD	M.Vinod	-SD-	31-07-2016
APPD	Felix J	-SD-	31-07-2016

DEPT CODE	GRADE OF TOL DIM C/M/F	SCALE	WEIGHT (kg)	REF TO ASSY.DRG	ITEM No.	No.OF ITEMS
		N.T.S.	— (Approx)	EL-DG-3-986-01-09820 7122 - Sheet 2		

TITLE: CASING FOR STRAIGHT PIPE - 700NB

CARD CODE

DRAWING No. 3-986-01-09821 REV. 02

SHEET No. 2 No.OF SHEETS 3

SUPERSEDES DRG. No.

SHT.24 SIZE A3 420 x 297

FIRST ANGLE PROJECTION

ALL DIMENSIONS ARE IN mm.

DRG No. 3-986-01-09821 REV 0

NOTE:-

1. FOR CONSTRUCTION MATERIAL REFER TABLE-2
2. ALL SUPPLIES TO CONFORM CLN:QP:01/00. WELDING AS PER WP:CL001A & AWS:D 1.1.
3. DIMENSIONS INDICATED ARE FINISHED SIZE ONLY.
4. ASSEMBLY No., DU No., AND ARROW HEAD TO BE WELD DEPOSITED OVER CASING AS SHOWN , AS PER CE:1501:21
5. BASE PLATE FOR NAME PLATE TO BE WELDED ON TO CASING, AT LOCATION SHOWN,
   FOR BASE PLATE & WELDING DETAILS REF DRG : 4 986 99 07720
6. ALL OVER MACHINING 6.3 FOR STOPPER RINGS & SURFACE INDICATED FOR FLANGES
7. A.H.S. =ARROW HEAD SIDE, T.E.S. = TAIL END SIDE, F= BOLTED FLANGE
8. FOR CASING Wt. REFER TABLE -1
   FOR Wt. OF LIFTING LUG , STOPPER RINGS & BOLTED FLANGE 'F'
   REFER TABLE - 2
9. SURFACE PREPARATION AND PAINTING: REF PAINTING SCHEME DOC. No. : PS- L&T - TANDA. BENDS / PIPES.
10. OVERALL PIPE TOLERANCE:-
    a]. AXIAL SHIFT: ± 3 MM
    b]. OUT OF SQUARENESS: ± 3 MM.
11. APPROPRIATE STIFFENERS HAVE TO BE PROVIDED BETWEEN FLANGES AND CASING BODY TO MINIMIZE DISTORTION OF FLANGE WHILE WELDING. STIFFENERS HAVE TO BE REMOVED AFTER WELDING.
12. ALL WELD FILLETS ARE 6 mm, IF NOT SPECIFIED.

THE INFORMATION ON THIS DOCUMENT IS THE PROPERTY OF BHARAT HEAVY ELECTRICALS LIMITED., IT MUST NOT BE USED DIRECTLY OR INDIRECTLY IN ANY WAY DETRIMENTAL TO THE INTEREST OF THE COMPANY

REF. DRG. No.

SIGN AND DATE

INVENTORY No.

REV	DATE	ALTERED / CHECKED	REV	DATE	ALTERED / CHECKED	REV	DATE	ALTERED / CHECKED

Name of Customer/Project

BHARAT HEAVY ELECTRICALS LTD.,
ELECTROPORCELAINS DIVISION
BANGALORE – 560 012

	NAME	SIGN	DATE
DRN	Arasan	-SD-	03-06-2016
CHD	M.Vinod	-SD-	31-07-2016
APPD	Felix.J	-SD-	31-07-2016

DEPT	GRADE OF TOL DIM	SCALE	WEIGHT (kg)	REF TO ASSY.DRG	ITEM No.	No.OF ITEMS
CODE	C/M/F	N.T.S.	— (Approx)	EL-DG-3-986-01-09820 7122 - Sheet 2		

TITLE: CASING FOR STRAIGHT PIPE - 700NB

CARD CODE

DRAWING No. 3-986-01-09821 REV. 02

SHEET No. 3 No.OF SHEETS 3

SUPERSEDES DRG. No.

SHT.24 SIZE A3 420 x 297

FIRST ANGLE PROJECTION

ALL DIMENSIONS ARE IN mm.

DRG No. 3-986-01-09831 REV 02

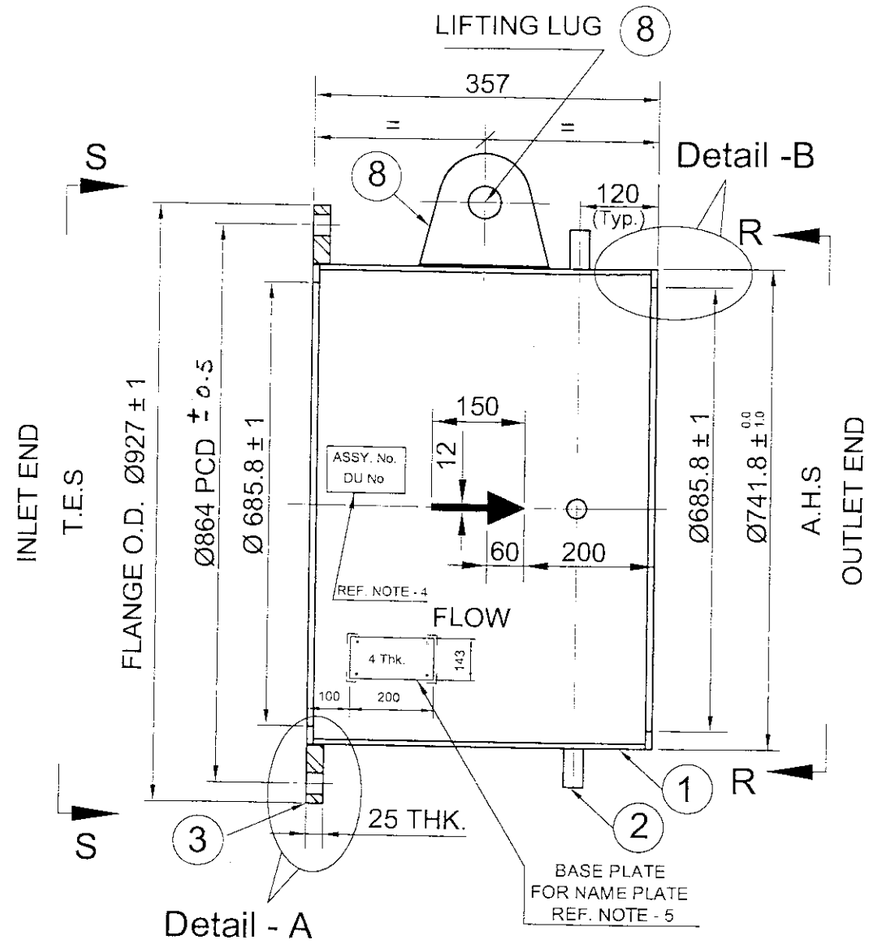

SECTIONED VIEW

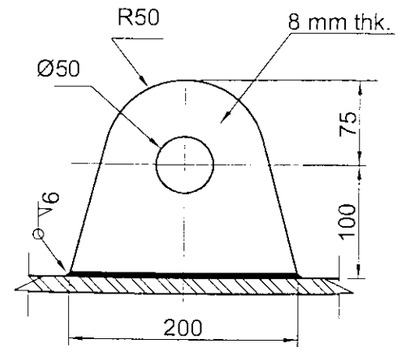

DETAIL OF LIFTING LUG

SL No.	Description	Size	Material	Qty. per Bend	Wt. / Piece (Kgs.)	Remarks
9	Stopper Ring	10 mm Thk.	IS:2062 - 2011 E250 BR KILLED STEEL	2 No's.	4.9	
8	Lifting Lug	8 mm Thk.	IS:2062 - 2011 E250 BR KILLED STEEL	1 No.	1.3	
7	Washer	–	IS:2016	56 No's.	–	NOT IN SCOPE OF VENDOR
6	Hex. Nut	–	IS:1367 (PART-3) Gr. 8.8	28 No's.	–	NOT IN SCOPE OF VENDOR
5	Hex. Bolt	–	IS:1367 (PART-3) Gr. 8.8	28 No's.	–	NOT IN SCOPE OF VENDOR
4	Gasket	–	NON - ASBESTOS	1 No.	–	NOT IN SCOPE OF VENDOR
3	Flange (25 thk.)	O.D 927 x ID 744.8	IS:2062 - 2011 E250 BR KILLED STEEL	1 No.	–	FREE ISSUE FROM BHEL
2	Dresser Stopper	Ø30 x 60 LG.	SAE 1018	4 No's.	0.33	
1	Casing	8 mm Thk.	IS:2062 - 2011 E250 BR KILLED STEEL	1 No.	Refer Table - 1	

TABLE - 2 PULVERISED COAL BEND PIPE MATERIAL DETAIL

VAR. No.	DU No.	Assembly No.	END CONNECTION INLET SIDE	END CONNECTION OUTLET SIDE	Qty No's per Unit	Wt. (kgs.)/ Pipe
01	CLCP-018	H56-P1,H78-P1, F12-P1,F34-P1,F56-P1,F78-P1,G12-P1,G34-P1,G56-P1,G78-P1,H12-P1,H34-P1, C56-P1,C78-P1,D12-P1,D34-P1,D56-P1,D78-P1,E12-P1,E34-P1,E56-P1,E78-P1, A12- P1,A34-P1,A56-P1,A78-P1,B12-P1,B34-P1,B-56-P1,B78-P1,C12-P1,C34-P1,	F 1	P	32	49.8

TABLE - 1

Name of Customer/Project

BHARAT HEAVY ELECTRICALS LTD.,
ELECTROPORCELAINS DIVISION
BANGALORE – 560 012

	NAME	SIGN	DATE
DRN	Arasan	-SD-	03-06-2016
CHD	M.Vinod	-SD-	31-07-2016
APPD	Felix.J	-SD-	31-07-2016

DEPT	GRADE OF TOL DIM	SCALE	WEIGHT (kg)	REF TO ASSY.DRG	ITEM No.	No.OF ITEMS
CODE	C/M/F	N.T.S.	– (Approx)	EL-DG-3-986-01-09830 7122 - Sheet 3		

TITLE

CASING FOR STRAIGHT PIPE - 700NB

CARD CODE

DRAWING No. 3-986-01-09831 REV. 02

SHEET No. 1 No.OF SHEETS 3

SUPERSEDES DRG. No.

SHT.24 SIZE A3 420 x 297

REV	DATE	ALTERED	REV	DATE	ALTERED	REV	DATE	ALTERED	M.V
		CHECKED	02	28.2.17	M.V. / CHECKED J.F.	01	15-12-16	CHECKED	J.F

FLANGE 'F1' IS FREE ISSUE FROM BHEL. IT IS NOT IN SCOPE OF CASING VENDOR. WT. OF FLANGE DELETED FROM TABLE-2. REF RR2281.

NOTE:- TABLES 1 & 2 MODIFIED. DETAIL 'B' FLANGED END CHANGED TO PLAIN END. DIMENSION 'L' & 'M' & NOTES CHANGED. REFER RR-2249

THE INFORMATION ON THIS DOCUMENT IS THE PROPERTY OF BHARAT HEAVY ELECTRICALS LIMITED., IT MUST NOT BE USED DIRECTLY OR INDIRECTLY IN ANY WAY DETRIMENTAL TO THE INTEREST OF THE COMPANY

REF. DRG. No.

SIGN AND DATE

INVENTORY No.

FIRST ANGLE PROJECTION

ALL DIMENSIONS ARE IN mm.

DRG No. 3-986-01-09831 REV 02

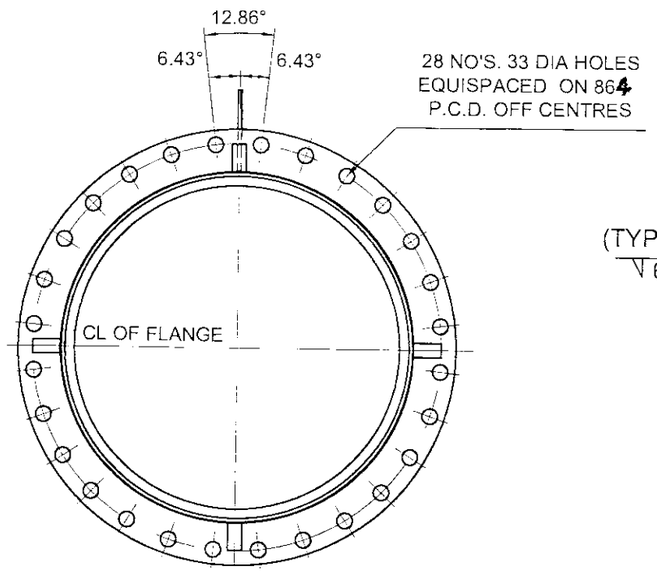

VIEW-SS

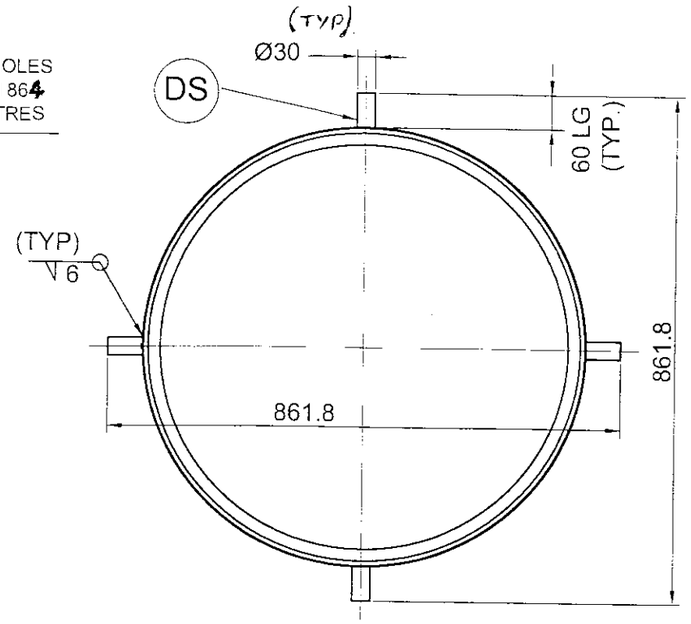

VIEW-RR

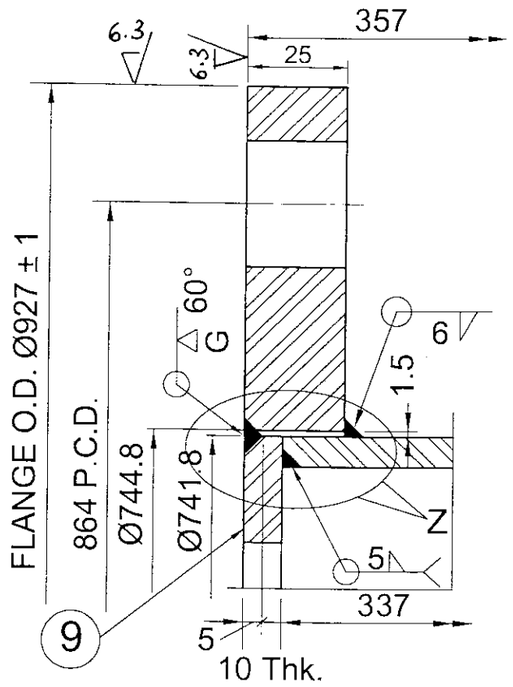

ENLARGED
SEC. DETAIL A - F

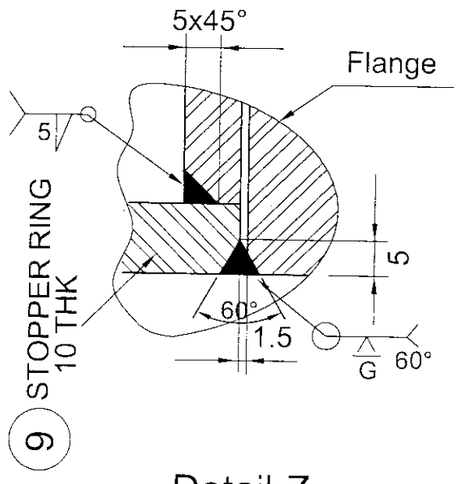

Detail-Z

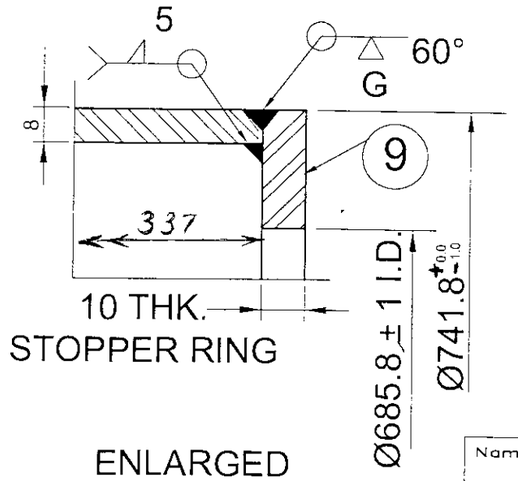

ENLARGED
SEC. DETL B - P

THE INFORMATION ON THIS DOCUMENT IS THE PROPERTY OF BHARAT HEAVY ELECTRICALS LIMITED., IT MUST NOT BE USED DIRECTLY OR INDIRECTLY IN ANY WAY DETRIMENTAL TO THE INTEREST OF THE COMPANY

SIGN AND DATE | REF. DRG No. | INVENTORY No.

REV	DATE	ALTERED / CHECKED	REV	DATE	ALTERED / CHECKED	REV	DATE	ALTERED / CHECKED

Name of Customer/Project

BHARAT HEAVY ELECTRICALS LTD.,
ELECTROPORCELAINS DIVISION
BANGALORE – 560 012

	NAME	SIGN	DATE
DRN	Arasan	-SD-	03-06-2016
CHD	M.Vinod	-SD-	31-07-2016
APPD	Felix.J	-SD-	31-07-2016

DEPT	GRADE OF TOL DIM C/M/F	SCALE	WEIGHT (kg)	REF TO ASSY.DRG	ITEM No.	No.OF ITEMS
CODE		N.T.S.	— (Approx)	EL-DG-3-986-01-09830 7122 - Sheet 3		

TITLE: CASING FOR STRAIGHT PIPE - 700NB

CARD CODE

DRAWING No. 3-986-01-09831 REV. 02

SHEET No. 2 No.OF SHEETS 3

SUPERSEDES DRG. No.

SHT.24 SIZE A3 420 x 297

FIRST ANGLE PROJECTION

ALL DIMENSIONS ARE IN mm.

DRG No. 3-986-01-09831 REV 02

NOTE:-

1. FOR CONSTRUCTION MATERIAL REFER TABLE-2
2. ALL SUPPLIES TO CONFORM CLN:QP:01/00. WELDING AS PER WP:CL001A & AWS:D 1.1.
3. DIMENSIONS INDICATED ARE FINISHED SIZE ONLY.
4. ASSEMBLY No., DU No., AND ARROW HEAD TO BE WELD DEPOSITED OVER CASING AS SHOWN , AS PER CE:1501:21
5. BASE PLATE FOR NAME PLATE TO BE WELDED ON TO CASING, AT LOCATION SHOWN,
   FOR BASE PLATE & WELDING DETAILS REF DRG : 4 986 99 07720
6. ALL OVER MACHINING 6.3 FOR STOPPER RINGS & SURFACE INDICATED FOR FLANGE AND PLAIN END.
7. A.H.S. =ARROW HEAD SIDE, T.E.S. = TAIL END SIDE, F= BOLTED FLANGE & P = PLAIN END.
8. FOR CASING Wt. REFER TABLE -1
   FOR Wt. OF LIFTING LUG, DRESSER STOPPER, STOPPER RINGS .
   REFER TABLE - 2
9. SURFACE PREPARATION AND PAINTING: REF PAINTING SCHEME DOC. No. : PS- L&T - TANDA BENDS / PIPES.
10. OVERALL PIPE TOLERANCE:-
    a]. AXIAL SHIFT: ± 3 MM
    b]. OUT OF SQUARENESS: ± 3 MM.
11. ALL WELD FILLETS ARE 6 mm, IF NOT SPECIFIED.

THE INFORMATION ON THIS DOCUMENT IS THE PROPERTY OF BHARAT HEAVY ELECTRICALS LIMITED., IT MUST NOT BE USED DIRECTLY OR INDIRECTLY IN ANY WAY DETRIMENTAL TO THE INTEREST OF THE COMPANY

REF. DRG. No.

SIGN AND DATE

INVENTORY No.	REV	DATE	ALTERED / CHECKED	REV	DATE	ALTERED / CHECKED	REV	DATE	ALTERED / CHECKED

Name of Customer/Project

BHARAT HEAVY ELECTRICALS LTD.,
ELECTROPORCELAINS DIVISION
BANGALORE – 560 012

	NAME	SIGN	DATE
DRN	Arasan	-SD-	03-06-2016
CHD	M.Vinod	-SD-	31-07-2016
APPD	Felix.J	-SD-	31-07-2016

DEPT / CODE	GRADE OF TOL DIM C/M/F		SCALE N.T.S.	WEIGHT (kg) — (Approx)	REF TO ASSY.DRG EL-DG-3-986-01-09830 7122 - Sheet 3	ITEM No.	No.OF ITEMS

TITLE: CASING FOR STRAIGHT PIPE - 700NB

CARD CODE

DRAWING No. 3-986-01-09831 REV. 02

SHEET No. 3 No.OF SHEETS 3

SUPERSEDES DRG. No.

SHT.24 SIZE A3 420 x 297