FIRST ANGLE PROJECTION

32404009

∇ 4 THE REST

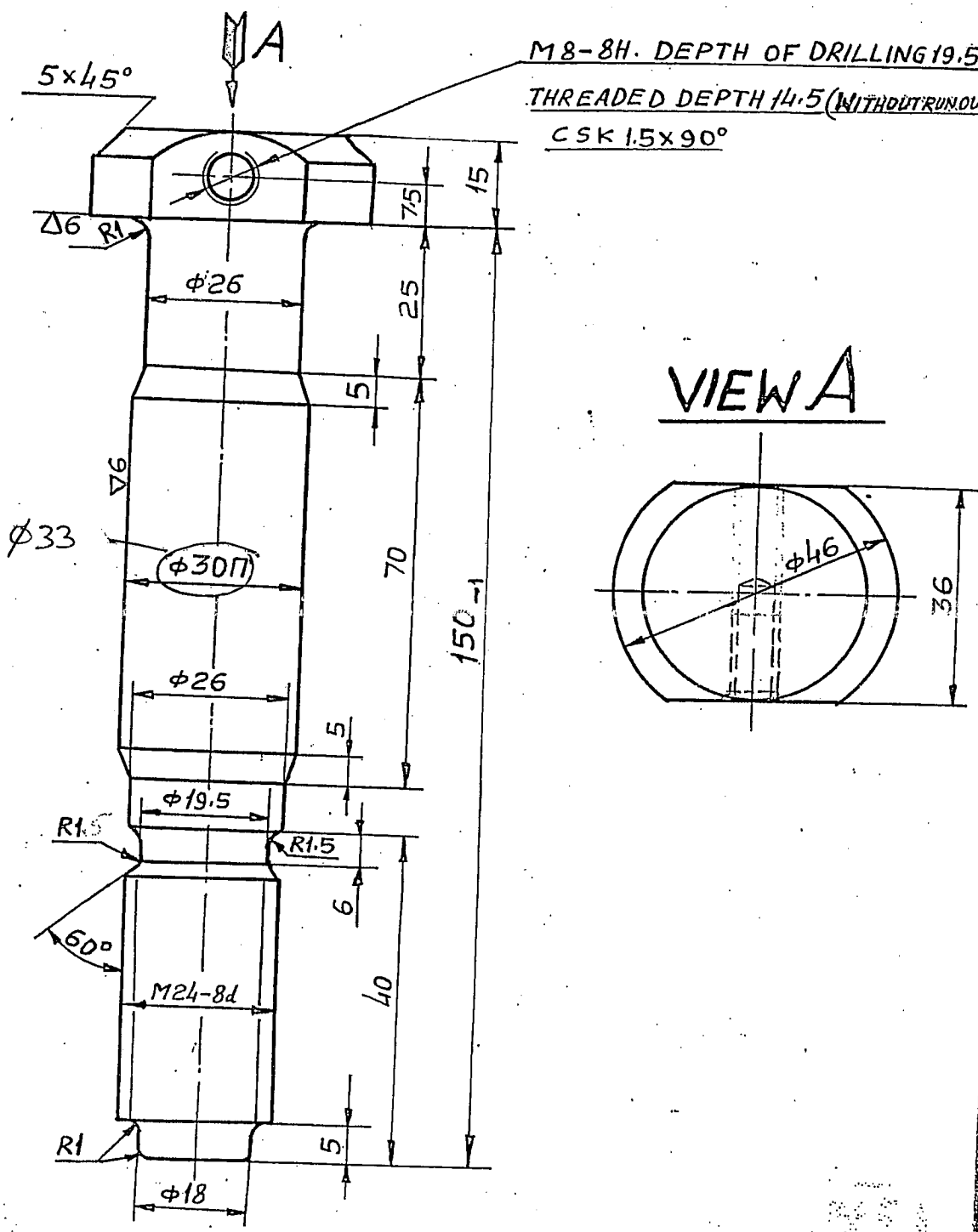

DESIGNED BY	P.SINGH		27.4.72	
CHECKED BY	P.SINGH		27.4.72	
SUPERVISED				
TECH CONT	Manchanda		16/5	
STD CONT	RPS		2/7	
APPROVED	J.N.KARAN		4/7/72	

DRAWN/TRACED

C-200-130

SPECIAL BOLT
M24×150

STEEL
C20 IS:2073-62
CM25 GOST 535-45

32404000 SP.

32404009

LETTER	WEIGHT	SCALE
– B	0.805	1:1
SHEET 1	TOTAL SHEET 1	
HEEP	STD	

U.S.S.R. DRAWING NO. 118303-5

DUPLICATE INVENTORY NO.

SIGN AND DATE

SIGN AND DATE

S1-7549