31404050

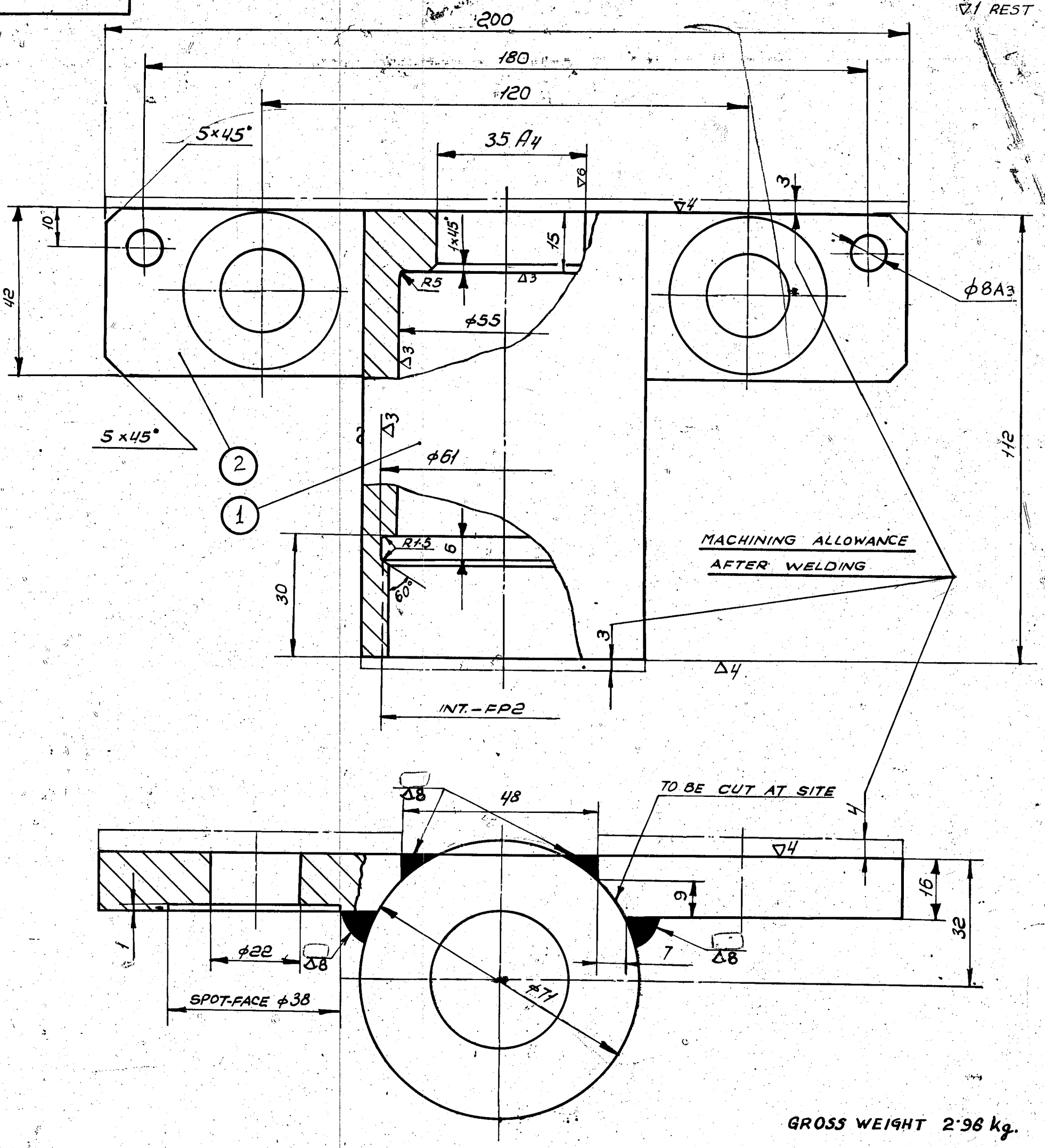

ITEM No.	DRG. No.	DESCRIPTION	MATERIAL	QTY.	PER ITEM (WT. IN kg.)	TOTAL (WT. IN kg.)	REMARKS
		DEPOSITED METAL	342 ГОСТ 9467-60			0·26	
2		FLAT 20×45×76	Мст.3 ГОСТ 500-58 / IS:1730-61 St.42-S IS:226-62	2	0·27	0·54	
1		CUP	20-ГОСТ 8731-58 / IS:1732-61 C20-IS:2073-62	1	1·62	1·62	

C-100-90

INDEX No.	REVISION	SIGN.	DATE
DRN.	DAYA SINGH.		27.10.67
DGN.	R.K.SINGAL		27.10.67
CHD.			
TECHST.			
STDN.			
BUR. CH.	J.N.KARAN		16.12.67
CH.ENGR.			

CUP

31404050

SHEET 1 | TOTAL SHEETS 1

STD | WEIGHT 2·42 | SCALE 1:1

HEEP
B. H. E. LTD. HARDWAR.

CERTIFIED TRUE COPY

WORKED	CHECKED	SUPVD.	APPRD.
J.P.V.	20/12/67		

USSR ASSY. No.	USSR. DRG. No.	INVENTORY No.	SIGN & DATE
1173C2 A	Г-118 6059	1-58	10/12/67