REQUEST FOR QUOTATION

MMI:PU:RF:003

BHARAT HEAVY ELECTRICALS LIMITED
Electronics Division
PB No. 2606, Mysore Road Bangalore - 560026
INDIA

RFQ NUMBER:
ANKBOS0006

RFQ DATE :
05.JUL.2017

Due Date
27.JUL.2017
Time: 13:00 HRS

VENUE :
NEW ENGG. BLDG

PURCHASE FILE COPY

(for all correspondence)
Purchase Executive : Ankita Reja
Phone : 26989637
Fax :
E-mail: ankitareja@bheledn.co.in

Offers shall be submitted through our e-procurement portal https://bheleps.buyjunction.in

Sl No.	Description	Qty	Unit	Delivery qty	Delivery Date
1	PS0679071580 Supply of BOS for 1100kw Roof top -Patia As per spec no PS-439-1134	1	ST	1	
2	PS0679071598 Supply of BOS for 900kw Roof top -Patial As per spec no PS-439-1134	1	ST	1	
3	PS0679071601 I& C of 1050kw Roof top Patiala As per spec no PS-439-1134	1	AU	1	
4	PS0679071610 I& C of 950kw Roof top Patiala As per spec no PS-439-1134	1	AU	1	
5	PS0679071628 O& M of 1050kw Roof top Patiala As per spec no PS-439-1134	1	AU	1	
6	PS0679071636 O& M of 950kw Roof top Patiala As per spec no PS-439-1134	1	AU	1	

Total Number of Items - 6

i). This is only RFQ not an order.
ii). In all correspondence quote RFQ No. & due date.
iii). In Quotation BHEL material code / RFQ Sl. No. should be mentioned clearly.

v). Quotation should remain valid for a minimum peiod of 90 days from due date.
vi). In case of non-receipt of Quotation or regret letter for 3 consecutive RFQs you are liable to be removed from our vendors list.
vii). All Prices should be written in words and numbers.

For and On behalf of BHEL.

Pre Qualification Criteria (PQC) for BOS Supply, I&C and O&M vendors for 2 MW Roof top SPV Project at DMW Patiala

1. The vendor should have completed the design, supply and erection of a minimum of 300 kWp roof mounted SPV systems in India in the last 2 years from the date of opening of the bid with atleast one plant with individual PV array rating of 100 kWp or above. Evidence shall be furnished in the form of Copies of purchase orders and completion certificates. In case, if the vendor has taken any external support of other agencies for any of the activities viz. Design, Supply of Balance of systems (BOS), erection, commissioning, complete details of the same shall be furnished viz. a) Name of the external agency, b) Work or job allocated to the external agency and c) evidence of the tie up with external agency.

2. Vendor shall also provide a list of the various Roof top SPV projects executed in India during the last 2 years. The list shall include details such as site locations, year of erection, client name, kWp size of plant and details and rating of inverters employed. This list is to be furnished as per below table for reference and providing this list is mandatory as part of the pre-qualification criteria.

Sl. No.	Rating of Roof top plant and location	Name of Client	PO reference	Date of installation	Details of inverters String/Central

3. Vendors shall demonstrate through declaration by way of furnishing POs/Certificate of completion issued by clients from self or from external support agency that they are able to carry out the execution of supply, erection, completion and commissioning of 2 MW of roof top projects at DMW, Patiala within 12 weeks of placement of PO by BHEL.

4. Vendor shall submit solvency certificate issued by Nationalized / scheduled banks for minimum worth of Rs. 50.00 Lakhs (Fifty lakhs) with date of issue not before three months from the tender opening date.

[illegible]

[illegible]

[illegible]

[illegible]

CONTENTS

1.0	Introduction	
	1.1	Project outline of 1050KWp AC solar photovoltaic power plant
2.0	BHEL scope	
3.0	Annexures to this tender.	
4.0	Vendor scope (Broad)	
5.0	Vendor scope (Deliverables)	
6.0	Instructions to vendors on bid submission	
7.0	Technical specification for design/drafting, infrastructure and logistics	
	7.1	Design and drafting of electrical drawings for DISCOM, CEIG submission
	7.2	Temporary site office for vendor's and BHEL use
	7.3	Electrical power/ water for construction, drinking water
	7.4	Construction for safe storage of vendor/BHEL supplied items
	7.5	Unloading, safe storage and movement of items received at site – obtaining Gate entry endorsements for materials and maintaining records with DMW Security
8.0	Technical specification for design, supply and erection works	
	8.1	Preliminary preparation of roof as required.
	8.2	Concrete pedestal casting –Vendor to submit the procedure of pedestal casting to BHEL for approval.
	8.3	BHEL -MMS -Approved design attached.
	8.4	Preparation of revised array drawings on roofs if required and fabrication dwgs of the MMS for Workshop roofs to be prepared by the vendor. Preparation of shadow analysis report for the roofs as per installation using reputed software such as PVSys, Google sketch and submitting to BHEL
	8.5	Supply of MMS-As per approved design.
	8.6	Erection of MMS structure
	8.7	Erection of SPV modules over the MMS structure
	8.8	Series interconnection of SPV modules to form strings
	8.9	Installation of string inverters (Details about nos and type of string inverters as in Annexure 3).
	8.10	Supply and installation of AC combiner boxes (ACCBs)
	8.11	Interconnection of SPV module strings to string inverters
	8.12	Ferruling for 1Cx4 cable

	8.13	Routing of 1Cx4 cable below the SPV modules
	8.14	Routing of 1Cx4 cable in GI cable trays
	8.15	Termination of 1Cx4 (DC side), 3Cx35 (AC side) cables at string inverters & ACCB boxes
	8.16	Supply and installation of LTPDB combiner boxes
	8.17	Laying and termination of cables from ACCB box to LTPDB box
	8.18	Underground trenches and laying of cables from building to building if required or routing cables between adjacent roof tops through conduits/catwalks
	8.19	Laying of cables from each LTPDB to Customer LT points in the building and terminating through suitably rated MCB/MCCB for evacuation
	8.20	Laying and termination of RS485 cables
	8.21	Supply and installation of lightning arrestors for roof-top
	8.22	Earthing for solar array MMS structures, other electrical panels, lightning arrestors
	8.23	Connectors for end terminations.
9.0	Supply and installation of other infrastructure / support systems	
	9.1	Water washing system for SPV modules (module cleaning system)
	9.2	Firefighting systems
	9.3	Identification marking of cables using cable tags
	9.4	Cable route markers
	9.5	Electrical Insulation mat
	9.6	Bi-Directional meter with MFM of 0.5 S class along with CTs, PTs, Outdoor enclosure as per DISCOM
10.0	Obtaining Preliminary NOC from DISCOM and CEIG prior to commencing works. Coordination/liaison with state / central departments/ CEIG etc for necessary approvals/clearances for commissioning, synchronization with grid/ plant commissioning.	
	10.1	Pre-commissioning inspections / checks / tests on DC side
	10.2	Pre-commissioning inspections/checks/tests on AC side, coordination/ liaison with state / central departments/ CEIG/DISCOM etc for necessary approvals/clearances for commissioning, synchronization with grid/ plant commissioning:
11.0	General conditions applicable during supply, installation and commissioning phase	
12.0	Operations and Maintenance	
	12.1	Date of commencement of operations and maintenance
	12.2	O&M personnel
	12.3	O&M operations – daily basis.

	12.4	O&M activities – monthly basis
	12.5	O&M activities - quarterly basis
	12.6	O&M activities – yearly basis
	12.7	O&M activities - as and when required (contextual basis)
13.0	Documents to be submitted for BHEL/DMW approval during detailed engineering	

1.0 Introduction

Project outline of 1050KW$_P$ (AC) Roof top solar photovoltaic power plant.

(a) Bharat Heavy Electricals Limited (BHEL), Electronics Division, Bangalore is setting up 2000 kW solar photovoltaic (SPV) roof-top system at Diesel Motor Works (DMW), Patiala. The scope of this tender is 1050 KWp capacity on the machine roofs only, consisting of 100 kWp and 50 kWp systems within DMW Patiala Works campus. Details of proposed capacity on each roof is as per Annexure 1. The PV Array layout attached with this tender are indicative and may slightly vary based on site limitations pertaining to shadow free clear area, electrical load offtake etc which will be fine-tuned during detailed engineering of system at each location/roof prior to execution.

Broad outline of project:

Presently, the power supply to DMW, Patiala is fed from PSPCL (Punjab State Power Corporation Ltd.) through 66KV transmission line stepped down to 11KV at 66/11kV Main Receiving Station (MRS) which is fed to 07 no. Electric Service Station (ESS) in the workshop area and 03no. Electric Service Station (ESS) in township area. 11KV supply at ESS is further stepped down to 415 V- three Phase and is fed to industrial and residential loads.

The Solar Power Plant is intended to be synchronized with the 415 V- three Phase Electric Service Stations (ESS) in the workshop area. All the equipments required for generation of electrical power from Solar Power Plant, converting it to AC power and feeding into the 415 V- Three Phase Grid forms the Scope of Work except for BHEL supplied items. All the equipments required to complete the grid connection with the existing system shall form the Scope of Work. For interconnection of Electric Power generated by Solar Power Plant with the grid at 415V-three phase, multi point Solar Photo Voltaic (SPV) systems, each having a capacity of maximum up to 100 KWp, shall be provided. The surplus power shall be fed to PSPCL feeder through net metering having all controls & accessories required for satisfactory power supply system.

The Bidder shall be required to take approval/NOC from the concerned DISCOM for the connectivity, technical feasibility, and synchronization of SPV plant with distribution network and submit the same to BHEL before commissioning of SPV plant. The bidirectional electronic energy meter (0.5 S class) shall be supplied and installed for the measurement of import/Export

of energy. Metering and grid connectivity of the roof top solar PV system under this Tender would be the responsibility of the Bidder in accordance with the prevailing guidelines of the concerned DISCOM and / or CEA. BHEL through project owner IROAF/DMW shall facilitate the procedure for connectivity. However, the responsibility for filing applications with DISCOM/CEA/CEIG, co-ordination, site verification and obtaining clearance for Grid connection as well as metering shall be with the bidder only.

The Scope of Work given above is only indicative. The detailed Scope of Work has been described in the Tender Document. Any supplies which have not been specifically mentioned in the Tender Document but which are necessary for the design, engineering, manufacture supply, installation, commissioning & performance or completeness of the project shall be provided by the bidder without any extra cost and within the time schedule of commissioning of the SPV plant. The Bidder(s) is advised to visit the Site of work and acquaint himself/themselves with the details of existing roof top structures, Site condition, the availability/supply of raw materials, accessibility, site for labour camps, stores, go-downs, office, extent of lead/lift in work, availability of skilled and unskilled labour, local tax structure etc. that may be encountered in the course of execution of Work. He/they should familiarize himself/themselves fully with the conditions at Site before submitting the Bid.

(b) Address/ contact particulars of official at DMW Patiala for seeking permission to visit site which is a restricted area: Workshop Electrical Engineer, DMW, Patiala. Visit to site shall be co-ordinated by BHEL for one day after obtaining necessary visit permission from DMW tentatively by 14th / 15th July'17. Vendors to submit queries along with details before 12th July'17 to facilitate entry to DMW premises.

(c) Details of distribution of 1.05 MW of SPV systems on various identified roof tops is as per Annexure -2. The array sizes may be slightly revised for specific roofs during installation subject to availability and confirmation of electrical loads in the building.

(d) Other salient features include provision of safe walkway arrangement between solar arrays on workshop rooftop to enable module washing and with access ladders wherever required, lightning protection, water washing system for SPV modules, metering through MFM and DISCOM approved meters, fire protection equipment, earthing system, mounting arrangement for String inverters, Data logger and ACCB Panels at roof top locations, LTPDB panels inside shop floors etc.

2.0 BHEL scope

(a) Supply of SPV modules
(b) Supply of string inverters with data loggers.

3.0 Annexures to this tender:

1. PV-Module drawing. (Annexure 1)
2. Tentative Capacity possible on each roof (Annexure 2)
3. Tentative Array layouts (Annexure 3)
4. Approved MMS drawings for Workshop. (Annexure 4)
5. Single Line diagram (SLD) of 100 kWp, 50 kWp, and SLDs of ACCBs and LTPDBs for various buildings (Annexure 5)
6. Key plan of buildings at site (Annexure 6)
7. Photographs of workshop roof and Annexe buildings for typical information (Annexure 7)

4.0 Vendor scope (broad):

(a) Receiving and unloading of BHEL supplied PV-Modules and String inverters and their storage.

(b) Supply of all BOS items (as per list of deliverables) and their receipt and storage upto installation/commissioning activities including BHEL supplied items shall be in vendor scope.

(c) For certain identified DC and AC side activities of the power plant as brought in this specification, vendor shall carry out design, engineering, drafting of drawings, obtain approval from BHEL/DMW-Patiala for the drawings, manufacture/ testing/ inspection at manufacturer's works, packing, supply, transportation, transit insurance, delivery/unloading at site. Further vendor shall carry out civil works, installation, pre-commissioning tests, Prior clearance/approval from Local power Utilities (DISCOM) / CEIG etc., for commencing works and later for plant commissioning as identified under this specification.

(d) Scope also includes operations and maintenance of all systems for a period of 5 years.

(e) Vendor shall have capability for design of systems such as cable laying/ routing/ dressing/ terminations, underground cable trenches, foundations for pedestals of Inverters and LT panels, water washing system for SPV modules, lightning arrestors, earth mat grids, earth chambers etc as envisaged under this specification.

(f) In case vendor does not have design/drafting capability as above, they shall tie up with competent design consultants. In such a case, vendor shall submit the credentials of the proposed consultants to BHEL after receiving purchase order from BHEL. Subsequent to approval by BHEL, vendor shall award the work on the consultants. All drawings/ design documents shall be originated by the consultants, endorsed by the vendor clearly stating the name of the project, names of clients (BHEL/IROAF/DMW-Patiala), drawing/document number, revision number, number of sheets etc. Details of drawings/ design documents to be submitted are brought out under various sections of this specification.

(g) All civil related works shall be tested as per BHEL/DMW-Patiala-approved FQP that will be issued during the course of project execution. All third party testing shall be carried out only at NABL accredited laboratories (or) Government laboratories.

(h) **Insurance** :

1) Vendor shall be required to affect Transit Insurance to the supplies under their scope, under an Insurance policy covering third party liability.

2) The transit Insurance shall cover transit of BOS (Balance of system) /Supplied goods from BOS works / BOS sub-vendor works to storage location in Patiala and further to various building sites in DMW-Factory.
3) Insurance charges, renewal premiums shall be borne by the vendor. It is the responsibility of vendor to maintain the Insurance policy in force for the entire duration of contract. In case of any loss / claim under the policy, the contractor shall immediately inform the same to BHEL and DMW and lodge the necessary claim and take all measures required for settlement of claim and protect the interest of BHEL, DMW. In case of any delay / lapse on the part of BOS vendor, the loss shall be made up by them by replacing the equipment under claim without waiting for Insurance settlement.
4) Transit insurance for BHEL supplied goods for the project up to Storage location in PATIALA and further up to various buildings is in scope of BHEL.
5) A comprehensive Storage cum Erection Cum Commissioning policy shall be taken by BHEL for insurance for entire project supplies and is not included in Vendor scope.

(i) **Warranty :**

The successful bidder shall provide a warranty covering the rectification of all defects in the design of equipment, material and workmanship of manufacturing of equipment for a period of 12 (Twelve) months after satisfactory commissioning. The “commissioning date” for purpose of Start of Warranty will be the date of commissioning of the last item under BOS Vendor scope.

Note: The above is only a broad outline of vendor scope for the sake of introduction. The detailed vendor scope is elaborated under various other sections of this specification.

5.0 Vendor scope (deliverables)

The table below briefly outlines the vendor scope of work. Vendor shall submit the offer (in two part bids) as per this list and quantity.

A) Deliverables for Package -(1050KW) =

#	Item Description	Approx Qty	Unit
1.	Module mounting structures – Workshop MMS alongwith walkway and PCC pedestals shall be as per BHEL design details.	1	Set
2.	4 sq.mm Cu, XLPE, FRLS, unarmoured DC Cable, 1.1 kV	10500	Mtrs
3.	1.1 KV, 3.5C X 10sqmm Aluminium , XLPE, armoured FRLS cable as per IS : 7078 (for water washing system pump power supply)	360	Mtrs
4.	1.1 KV, 3.5C X 16 sqmm Copper XLPE, armoured FRLS cable as per IS : 7078	200	Mtrs
5.	1.1kV, 3.5CX25 sq.mm Copper XLPE, armoured FRLS cable as per IS : 7078	650	Mtrs
6.	1.1kV, 3.5CX50 sq.mm Copper XLPE, armoured FRLS cable as per IS : 7078	700	Mtrs
7.	ACCB 1 In 1 Out	3	Nos
8.	ACCB 2 In 1 Out	9	Nos
9.	LTPDB with MFM and Unidirectional Meter as per DISCOM/PSPCL requirements and spare MCBs for cable termination points in customer LDB evacuation points as required	12	Nos
10.	Weather proof Male & Female Snap-on (MC4 type) Connectors for 4 sq.mm	700	Set
11.	Cable tray 100mm(W)X50mm(H)X2mm(T)- Perforated type GI with coupler plate, H/W and cover of 2 mm Thk	2425	Mtrs
12.	Lightning arrestor (LA) of Copper Globe type	24	Nos
13.	Chemical earthing Material: Electrodes, backfill compound etc. For LA, MMS, String inverter, ACCB, LTPDB earthing	114	Sets
14.	25X3 mm GI strip for MMS and roof structure earthing	2360	Mtrs
15.	50 X 3 mm GI/ GI strip of Equivalent cross section for LA , string inverter & LTPDB earthing	1530	Mtrs
16.	Tool Kit & Equipment : (Items for 1 Set). a) Crimping tool for MC4 type Snap on connectors - 4 no b) Screw Drivers Set – 4 No., c) Plier – 4 No,	4	set

	d) Spanners Set - 4 No., e) Digital Multimeter – 4 No.(1000V AC & DC, 100A range)- Make: Meco /WACO, f) Digital clamp meter- 4 No (AC & DC 100A)- Make: Meco/WACO, g) Allen keys set - 4 No. h) Earth resistance tester – 1 no. Make : WACO/equivalent i) Megger (0 – 1000 Volts) – 1 no. Make : WACO/Equivalent		

17.	RS-485 compatible 2PX0.5 sq.mm copper armoured cable	1050.	Mtrs
18.	Fire Extinguishers and Safety Equipments: (Items for 1 Set). a) Dry powder type Extinguisher (9kg As per IS:13849/IS:15683) – 2 nos, b) CO2 type Extinguisher (9 kg as per IS:2878/IS:15683) - 1 nos, c) Shock Treatment Chart - 2 nos, d) First Aid Box - 2 nos	**4**	**set**
19.	Module Cleaning system: a) As per requirement specified elsewhere in tender.	**1**	**set**
20.	Miscellaneous supply items: a.) Cable ties: As required b.) Danger plates with necessary fixtures- As required. c.) Marking plates for structures ,LA, Earthing pits & cables ,routing tags for cable tracing-as required. d.) Plant name board –As required.	**1**	**SET**

	e.) Lug termination at LA, earth rods LTPDB panel etc.(relevant make, type ,size) as required. f.) MS Ladder with hand rail –As required at all roof tops where SPV systems have to be accessed. To be supplied and fixed firmly with roof and ground surface. Refer typical BHEL design. g.) String inverter/ACCB/Datalogger mounting angles with foundation and canopy. h.) Ferrules –as required. i.) Rubber MAT 1.1kv grade 2.5mm thk as per IS –As required per LTPDB.		
21.	Spares for ACCB, LTPDB etc - Qty as per spec	**1**	**Set**
22.	Operation and Maintenance for 5 Years of 1050 KW Plant.	**To be accounted over 20 Quarters (1 quarter = 1 AU)**	**AU**
23	Weather monitoring Station (MNRE/SECI approved) consisting of Pyranometer (1 no.), Anemometer (1 no.), Temperature sensors for Module back temp sensor and Ambient temperature recording, along with Data logger and 800 VA UPS with battery bank. Required supporting stands, and civil works for mounting and Signal and power cabling to be provided.	**1**	**Set**

6.0 Instructions to vendors on bid submission

6.1	Offer shall be submitted in two-parts (Two part-bid). Both parts shall be in separate sealed envelopes as per instructions in tender. The individual envelopes shall be enclosed in a common bigger envelope with markings (address etc) on the envelope as per instructions provided in tender.
6.2	First-part shall be techno-commercial bid. Following details shall be furnished: 1. Technical offer with covering letter expressing acceptance to BHEL tender specification 2. Separate list clause-wise in case of deviations, if any 3. Filled-up enclosures as per BHEL formats (meant for first-part) provided in tender
6.3	Second-part shall be price bid with filled up enclosures as per BHEL formats provided in tender.
6.4	In addition to the above instructions, tender document provides detailed instructions for bid submission. Vendor shall submit the bid based on instructions in tender document.

Note: This is a no deviation specification. In case of any clarifications needed in this specification, the same needs to be communicated in writing at least five days prior to the technical bid opening date.

7.0 Technical specification for design/drafting , infrastructure and logistics

#	**BHEL specification** **Note:** Design and drafting and logistics is not a separate billing item. Charges for all these activities shall be deemed to be absorbed in the related supply and I&C items.

7.1	**Design and drafting** Vendor shall either have in-house design/drafting expertise (or) shall outsource consultancy in case of inadequacy of internal expertise. Vendor/ their consultant shall carry out electrical/ mechanical / civil design computations wherever applicable. Typical design/drafting areas are as listed below: (1) Outdoor/underground cable trench layouts/cross sections: LT/Control cables (2) Layout of lightning arrestors with area coverage / protection calculations (3) PCC precast foundation for lightning arrestor masts: design calculations (4) Water cleaning system for SPV modules with pressure/discharge/sizing calculations (5) Earth mat/Ground electrode /earth grid calculations for DC solar arrays and all AC side equipment and Lightning Arrestors at each building (6) Earth chambers: design (7) Shadow analysis report of PV array on roof tops as per site condition The above list is indicative and not exhaustive. Wherever BHEL/DMW finds it relevant and applicable, vendor shall carry out design and submit documents viz. GA drawings / datasheets / GTP / MQP/ type test reports etc for BHEL/DMW/CEIG/ approval.
7.2	**Temporary site office for vendor's use and for use by BHEL project personnel** Vendor shall make necessary office arrangements such as porta cabin with furniture, electrical points/ fittings etc on their own for use/ occupation at site during the period of project execution.

7.3	**Electrical power / water for construction/ drinking water** (a) Vendor shall organize, on their own, necessary electrical power supply such as DG sets etc required for construction activities and also for porta cabin offices meant for their use. (b) For welding work, vendor to arrange adequate power and length of cables to access all workshop roof tops and Annexe buildings. (c) For the purpose of execution of the Work, the Contractor shall be permitted to use water supply available at Site free of cost. The Contractor shall also be permitted to use existing Railway Electric Supply and Compressed Air supply for operation of small tools only for the purpose of execution of Work free of cost. However, in case of non-availability for any reason of these facilities, the Contractor shall make his own arrangement at his own cost for the same. (d) Vendor shall arrange drinking water for their staff as well as for BHEL/DMW staff.

7.4	**Construction of yards/sheds for safe storage of vendor supplied items** (a) DMW and BHEL have identified central area within the DMW works for unloading and storing PV modules and String inverters on receipt. Vendor shall, at a suitable location at site, as decided based on discussions with BHEL site engineer, construct closed sheds for safe storage of items such as ACCB boxes, LTPDB boxes, cables etc and other miscellaneous items such as tools, measuring instruments, cable glands/ lugs/ markers, safety gadgets, insulation mats, sign boards etc. The items are to be brought into the DMW campus after necessary Gate entries in DMW Security records and with Gate pass and Register which shall be carefully preserved and handed over to BHEL. (b) These sheds shall have suitable water-proof roof and side walls so to ensure that there are no pin holes or joints through which rain water entry is possible. Also, these sheds shall be designed to withstand heavy wind loads. Lockable door shall be provided to ensure safety of these items. (c) Separate closed shed shall be constructed for storage of civil construction items such as cement bags etc. (d) Similarly, open yards shall be constructed with suitable fencing all around and lockable gate for storage of solar PV modules, MMS structure items, stone aggregate, sand, bricks, steel materials . (e) Area of all storage yards/sheds shall be selected based on sizes of items. Vendor shall, at the time of starting their activities at site, submit drawings/ sketches/ dimensions etc to obtain approval from BHEL/DMW. (f) Wherever applicable, suitable raised platforms / arrangements shall be provided to ensure that the items are not affected by water at the ground level during rain, storm, flood etc. (g) Storage yards/sheds shall be provided with adequate clearance (within the yard) to facilitate movement of concerned transportation vehicles/ equipments such as forklifts, hydra, trucks etc as applicable. (h) Safety of all the vendor-supplied items shall be within vendor scope. Accordingly, vendor shall ensure lock and security for these items.
7.5	**Unloading, safe storage and movement of supply items received at site:** (1) Vendor shall organize all necessary resources such as labour, machinery and tools (cranes, hydra, forklifts, transportation trucks/ trolleys, lifting accessories etc. for unloading the BHEL's as well as vendor-supplied items received at site and subsequent movement to storage yards/sheds. (2) Similar arrangements shall also be made by vendor for movement of the stored items from storage yards/sheds to the exact construction locations within the project site. (3) Vendor shall maintain proper registers/ files/ records of invoices, LRs, delivery challans, material receipt certificates etc. Also, proper records shall be maintained to keep track of material entry (for storage) and material issue (for construction). (4) All such documents shall be suitably preserved for further handing over to BHEL.

	(5) Safety of items shall be in vendor scope. Accordingly, suitable watch and ward shall be deployed round-the-clock basis.

8.0 Technical specification for supply and erection works

8.1	Vendor should do preliminary preparation of roof as required.
8.2	Vendor to submit the detailed procedure for pedestal casting to BHEL for approval.
8.3	Approved MMS-Design attached.
8.4	Vendor shall based on the Approved MMS Design to prepare fabrication drawings of MMS and general layout available, prepare detailed layout of system for each roof and submit to BHEL. In case there is an increase in MMS tonnage as compared to the typical design given by BHEL due to additional supports required as per specific site conditions, vendor to bear the cost without any cost escalation.
8.5	Supply of MMS as per Approved design.
8.6	**Erection of MMS structure** Vendor shall erect the MMS structure as per approved design. Wherever, welding is carried out, vendor shall arrange for proper grinding and cleaning of the weld surfaces, followed by application of Metal primer and Metallic aluminium paint. Pre-Galvanized parts shall be sprayed with Zinc spray after work.
8.7	**Erection of SPV modules over the MMS structure** Vendor shall mount the SPV modules supplied by BHEL over the erected MMS structure.
8.8	**Series interconnection of SPV modules to form strings** Supply of SPV modules is in BHEL scope. Vendor shall interconnect the SPV modules as follows: (a) Each module is fitted integrally with a junction box having positive and negative polarity cables (4 sq-mm). (b) Positive cable of one module shall be connected to the negative cable of adjacent module. The cables have MC4 type of connectors. One polarity cable has male type connector, while the other has female type connector. (c) This way, 20 modules shall be connected in series. Each set of connections is called as a series string. (d) After placing the purchase order on vendor, BHEL will provide layout drawings that will describe the exact way in which the series strings are formed. Vendor shall implement the interconnection as per these drawings.

8.9	**Installation of string inverters** (1) Supply of string inverters is in BHEL scope. Approximate weight of inverter 50 Kg. (2) On Workshop roof tops, the Inverter shall be mounted on MS stand that shall be attached by welding to the Roof top MMS. (3) Minimum ground clearance shall be 500mm. (4) Structure shall have canopy (as rain shade) made of GI sheet of minimum 2mm thick. (5) All galvanizing shall be minimum 80 microns and as per IS: 4759, IS: 2629, IS: 2633 (6) Vendor shall submit GA of the mounting structure along with stability calculations (STAAD.pro etc) for BHEL/DMW approval during detailed engineering. (7) All structure/pedestal items including hardware shall be in vendor scope of supply.

8.10	**Supply and installation of AC combiner boxes** (1) AC combiner boxes, ACCB for combining the 3-phase AC outputs of the string inverters at the roof-top, shall be in vendor scope of supply and installation. For ACCB details, refer SLD. (2) ACCB shall be 3-phase, 50Hz, 415VAC, 1.1kV system voltage, outdoor, with canopy, IP55, neoprene gasket for doors/ frame joints, CRCA sheets 2mm (frame)/ 1.6mm (door)/ 3mm (removable gland plate bottom side), painting seven tank process, colour RAL 7032, base frame with section 75mm min/ black painted, panel lifting hooks, Copper bus bars as per SLD, RYB colour coded heat-shrinkable sleeves for bus bars, DMW/DMC insulator supports, earth bus, accessible live parts shrouded with FRP/polycarbonate sheets, MCBs for i/c feeders, 25mm min phase to phase clearance, LED indicators for RYB at o/g, colour coded Cu-cable AC/DC wiring (1.5/2.5 mm2 as applicable) etc. For the incoming and outgoing power cables, nickel plated brass double compression glands, Copper cable lugs, SS304 plain/ spring washers shall be provided. (3) One extra feeder of 16 A rating shall be provided to meet the various auxiliary supply requirements at the roof-top such as module washing pumps, data loggers through an MCCB etc. (4) MCCB, MCB shall be L&T/C&S/Siemens/ABB/ Schneider or reputed equivalent subject to BHEL approval. (5) Indicator lamps shall be L&T/ C&S or reputed equivalent subject to BHEL approval (6) IS/IEC standards and other general features shall be as per “LT switchgear panel” section of this specification. (7) Vendor shall submit the detailed GA, Single Line diagram (SLD), Bill of materials (BOM), Quality plan (MQP) etc of ACCBs for BHEL/DMW approval during detailed engineering. (8) Spare shall be supplied as follows: (a) MCCB: 5 Nos of 100A and 3 Nos of 63 A. (b) LED indicators: 5 Nos each type (9) Vendor shall install the ACCB boxes by welding the stand supports to existing structures on Workshop roof tops. (10) Minimum ground clearance shall be 500mm. (11) All galvanizing shall be minimum 80 microns and as per IS: 4759, IS: 2629, IS: 2633 (12) Vendor shall submit GA of the mounting structure along with stability calculations for BHEL/DMW approval during detailed engineering. (13) All structure/pedestal items including hardware shall be in vendor scope of supply.

8.11	**Interconnection of SPV module strings to string inverters** (1) Vendor shall connect each series string of 20 SPV modules to the string inverter using 1Cx 4 cable, copper, XLPO, unarmoured as per TUV 2pfg 1169/08.2007. (2) Cable shall be vendor scope of supply. (3) Vendor shall also supply plug connectors of MC4 type, each set having a pair of male and female parts, to join both the cables. (4) MC4 connectors shall have rating of 1000VDC (IEC), rated current of 30A, Type approved by TUV Rheinland for product safety. (5) Make: Multicontact, Bizlink, Sunlont, Twinsel or other reputed equivalent subject to BHEL/DMW approval during detailed engineering.

	(6) Two sets of tool kits (with box enclosure) shall be supplied. This shall include crimping plier MC4, open end spanner set MC4, stripping plier MC4, socket wrench insert to tighten, socket wrench insert to secure etc.
8.12	**Ferruling for 1Cx4 cable** 1) For 1Cx4 DC solar array cable, vendor shall provide UV resistant ferrules printed with source/destination identification of cable connection. Printing details shall be submitted for BHEL/DMW approval during detailed engineering. Printing shall be of appropriate size to ensure readability. 2) Ferrules shall be provided on both the termination ends: module end, inverter end. 3) Supply of ferrule shall be in vendor scope. Make shall be reputed brand. Approval for make/ type/ colour/ dimension etc shall be obtained from BHEL/DMW prior to procurement.
8.13	**Routing of 1Cx4 cable below the SPV modules** (1) 1Cx4 cables connecting the SPV module strings to inverters shall be suitably routed below the SPV modules and along the horizontal purlin member of MMS structure. Also, the cables shall be fastened to the purlin using UV resistant cable ties that shall be in vendor scope of supply. (2) Spacing between two adjacent cable ties shall be so chosen as to ensure that there is no loose hanging of cables. (3) Cable ties, nylon polyamide 6.6 UV stabilized black, UL94 flammability rating V2, operating temperature up to 85 deg C, shall be used to arrest any possibility of movement or sagging. Make: 3M, Phoenix contact, Weidmuller, Hellermanntyton, Panduit or other reputed equivalent subject to BHEL/DMW. Width of the cable ties shall be minimum 4.5 mm. Length shall be so chosen as to ensure that the bunched cables are held firmly to the MMS structure. During detailed engineering, BHEL/DMW approval shall be obtained for the selected brand and sizes of cable tie.

8.14	**Routing of 1Cx4 cable in GI cable trays** (1) Where 1Cx4 cables run between two adjacent rows of structure and also where the cables run on the roof-floor up to string inverters, routing shall be on GI cable trays Wx Hx t = 100x 50x 2 mm, perforated type, with GI cover of minimum 2mm thick, coupler plates, GI hardware as per relevant IS standard. Suitable flexible PVC conduit shall be used wherever required for covering cable at entry into GI cable tray. (2) Vendor shall submit the make, part number, GA, BoM, datasheet etc of the cable trays for BHEL/DMW approval during detailed engineering.
8.15	**Termination of 1Cx4 (DC side), 3.5C AC cables at string inverters & ACCB boxes** (1) 1Cx4 cables of positive and negative polarities originating from SPV module strings shall be terminated at the DC input side of string inverters using MC4 connectors that are in vendor scope of supply for both ends. (2) For AC side connection at string inverters and ACCB boxes, cable as per SLD, 1.1kV, Copper, XLPE, armoured as per IS: 7098 part-1, together with nickel plated brass double compression cable glands, cable lugs, SS304 bolts/ nuts/ plain and spring washers shall be in vendor scope of supply. Termination shall be carried out using appropriate tools and torque setting as per BHEL/DMW approval.

8.16	**Supply and installation of LTPDB combiner boxes** (1) LTPDB, as per SLDs, shall be in vendor scope of supply and installation. (2) LTPDB shall be 3-phase, 50Hz, 415VAC, 1.1kV system voltage, outdoor, with canopy, cubicle design, compartmentalized (Breaker/ control box/ CTPT chamber etc), floor mounted, free standing IP55, neoprene gasket for doors/ frame joints, CRCA sheets 2mm (main frame)/ 1.6mm (door)/ 3mm (removable gland plate bottom side), painting seven tank process, colour RAL 7032, MS base channel 75x40x6 min/ black painted, panel lifting hooks, Copper bus bars as per SLD, RYB colour coded heat-shrinkable sleeves for bus bars, DMW/DMC insulator supports, Al earth bus, accessible live parts shrouded with FRP/polycarbonate sheets, MCCBs as per SLD for I/c feeders, SPDs, 25mm min phase to phase clearance, LED indicators for RYB at o/g, Unidirectional Energy meter as per DISCOM/PSPCL requirements, and a digital MFM cl:0.5 with RS485 port at o/g, colour coded Cu-cable AC/DC wiring (1.5/2.5 mm2 as applicable), panel illumination lamp, space heater, thermostat etc. For the incoming and outgoing power cables, nickel plated brass double compression glands, cable lugs, SS304 plain/ spring washers shall be provided. (3) Digital MFM shall be of 0.5 Cl accuracy (4) Unidirectional Energy meter which shall be off approved make and type as per Punjab Discom (PSPCL) along with necessary CTs,PTs. If required as per DISCOM this shall be provided per site in separate enclosure suitable for sealing by DISCOM. (5) The LTPDB shall have MCCBs for connecting to load point at DMW building according to the evacuation plan. These shall be L&T/ABB/ Schneider reputed make. (6) MCB: L&T/ C&S/ ABB/ Siemens/ Schneider or reputed equivalent subject to BHEL approval (7) Indicator lamps shall be L&T/ C&S or reputed equivalent subject to BHEL approval (8) IS/IEC standards and other general features shall be as per “LT switchgear panel” section of this specification. (9) Vendor shall submit the detailed GA, SLD, BOM, MQP etc of LTPDBs for BHEL/DMW approval during detailed engineering. (10) Spares shall be supplied as follows: (a) MCCB : 2 Nos each of 200A and 100A. 2 Nos each of 32 A and 16A. (b) LED indicators: 3 Nos each type (11) Vendor shall install the LTPDB panels near to Customer LT evacuation point. (12) Termination of output cable from LTPDB to customer evacuation point along with required terminal cable lugs, bolts and conduit etc.

8.17	**Laying and termination of cables from ACCB box to LTPDB box** (1) Cables as per SLD, 1.1kV, Copper, XLPE, armoured as per IS: 7098 part-1 shall be in vendor scope of supply and installation: for laying between ACCB to LTPDB. (2) Nickel plated brass double compression cable glands, cable lugs, SS304 bolts/ nuts/ plain and spring washers shall be in vendor scope of supply. Termination shall be carried out using appropriate tools and torque setting as per BHEL/DMW approval. (3) These cables shall be routed using the same type of GI cable trays/ accessories/ hardware used for 1Cx4 cables up to the ground level outside the buildings.
8.18	**Underground cable trenches and laying of cables from buildings to building if required.** Routing of cables from buildings to buildings is not envisaged. However, if required due to specific conditions, such power, control, communication cables routed from one building to another building through underground cable trench (direct burying) as per IS: 1255. Typical trench details/dimensions are below only for tender purpose. During detailed engineering, cable trench layouts and cross section drawings as per IS: 1255 shall be submitted for BHEL/DMW approval. (a) Total trench depth = 750 mm minimum (b) Trench width = As per number of cables/ HDPE pipes (c) Trench shall have layers one over the other as below (from bottom to top): 1. Bottom layer shall be sand of IS: 383 with 75mm minimum thick. 2. 3C power cables shall be laid over the sand layer. 3. Another layer of sand of 75 mm minimum thick. 4. Single layer of brick as protective cover 5. Layer of sand of IS:383 with 75mm minimum thick 6. All communication cables shall be laid within HDPE pipe 7. Layer of sand of IS:383 with 75mm minimum thick 8. Single layer of brick as protective cover 9. Trench shall, then, be filled with refill soil and compacted Communication cables shall be routed through HDPE pipe of PE63 grade, pressure rating PN6, appropriate nominal diameter and as per IS: 4984 (1995). It shall be ensured that a max of 60% of inner space shall be occupied by the cables. Communication cables and HDPE pipe shall be in vendor scope of supply. Vendor shall submit GTP/ make/ part number of the HDPE pipe, accessories and tools for BHEL/DMW approval during detailed engineering. Bending radii for cables shall be as per IS: 1255. At pathway/road/drain/trench crossings, cables shall be routed through GI pipe of appropriate size that shall be in vendor scope of supply and technical details / brand etc shall be submitted

	for BHEL/DMW approval. It shall be ensured that a maximum of 60% of inner space of GI pipe shall be occupied by cables. Vendor shall take utmost care in laying the cables in order to prevent damages on outer sheath and inner insulation. In case cables found to be damaged/ cut after the laying in trenches, vendor shall remove the damaged portion and join the cut pieces using appropriate cable jointing kits that shall be in vendor scope of supply.

8.19	**Laying of cables from LTPDB to Customer LT point evacuation** (1) Cables as per SLD, 1.1kV, Copper, XLPE, armoured as per IS: 7098 part-1 shall be in vendor scope of supply and installation: for laying between LTPDB and customer LT point evacuation through existing cable trench as per IS: 1255. (2) Nickel plated brass double compression cable glands, cable lugs, SS304 bolts/ nuts/ plain and spring washers for above cable terminations shall be in vendor scope of supply. Termination shall be carried out using appropriate tools and torque setting as per BHEL/DMW approval. (3) Wherever spares breakers are available at Customer LT evacuation panel, termination shall be carried. However, few sites where spare breakers not available, LT busbar extension is required from customer LT panel to solar LTPDB and cable shall be terminated.
8.20	**Laying and termination of RS485 cables** Vendor shall supply and install RS485 cable, copper, 2Px0.5, twisted pair, screened, armoured in daisy chain loops (a) from data loggers to string inverters and (b) from MFM meters of LT Panels to data loggers, (c) from weather monitoring system to data loggers. All cable accessories such as glands, lugs, ties, ferrules, tags, trays etc shall be in vendor scope of supply.
8.21	**Supply and installation of lightning arrestors for roof-top** Vendor shall supply, install and commission Copper Globe Type lightning arrestors at the roof-tops. GA/GTP of LA, GI 40x 4 down conductors and suitable mounting arrangement for LA, suitable routing arrangement for down conductors, earth electrode/ chamber provisions shall be submitted for BHEL/DMW approval during detailed engineering. All items in vendor scope of supply and installation.

8.22 Earthing for solar array MMS structures, other electrical panels, lightning arrestors

Solar array MMS structures, string inverters, data loggers, ACCB boxes, LTPDB and lightning arrestors etc shall be provided with appropriate earthing for protection against faults as guided by IEC 60364.

Earthing system shall be designed with consideration of the soil resistivity of the project site. Unless otherwise specified, earthing system shall be in accordance with IS: 3043 and IEEE 80, Indian Electricity Rules, Codes of practice and regulations existing in the location where the system is being installed. Vendor shall submit design calculations for earth grids/ system for roof-top equipments and lightning arrestors for BHEL/DMW approval during detailed engineering.

Chemical earthing electrodes of 3m minimum long, 50 mm minimum diameter, perforated GI pipe, chemical compound filled, double walled shall be installed at the ground level outside the buildings. For each electrode, earth chamber shall be constructed using brick masonry. Electrodes shall be of reputed brand such as Ashlok, Balaji Metacast Industries,JK or any other equivalent subject to BHEL/DMW approval during detailed engineering.

Earth chamber shall have features as follows:

(a) Square sized with 300mm x 300mm minimum inner opening. Exact size shall be chosen to ensure ease of maintenance operation using spanners etc. (b) Brick wall thickness all around = 115 mm minimum

(c) Depth of chamber = 500 mm minimum below FGL.

(d) Projection of chamber above FGL = 150mm minimum

(e) Top of electrode shall have minimum clearance of 100 mm below cover plate.

(f) Cover plate, cast iron of 5mm minimum thickness, square shaped to fit the opening of chamber, painted with red oxide and two coatings of black paint both sides.

(g) Cover plate shall have suitable lifting hooks and padlocking arrangement.

(h) Both the outer and inner walls of the brick wall shall be plastered and painted as per relevant clauses of "**General civil works**" of this specification.

(i) Supply and installation of all materials shall be in vendor scope.

GI flat earthing:

(a) 25x3 mm for MMS structures: (1) structure to structure, (2) interconnection of structures of all rows, (3) from top of buildings to the chemical electrodes at ground level.

(b) 50x3 mm/Equivalent cross section for string inverters, data loggers, ACCB box, lightning arrestors at roof-top

General points:

(a) All items related to earthing viz electrodes, GI flats, hardware etc in vendor scope of supply.

	(b) GI bolts, nuts, plain washers shall be used. Spring washers shall be zinc/epoxy coated. (c) Wherever applicable, welding for GI flats shall be carried out using electric arc welding. Both the flats shall be overlapped for the full width where they are in perpendicular direction in same plane. Where the connection is along same line, both flats shall be overlapped for a minimum of 50mm. L-bend with weld length of 50mm minimum shall be adopted wherever overlap length to be ensured. (d) Resistance of welded joint shall not be more than that of GI flat. (e) Welds shall be treated with red oxide for rust protection and then coated with bitumen compound for corrosion protection. (f) While laying earthing electrodes, adding/mixing of chemical compound and water around the electrode in the dug hole shall be as per instructions of OEM. Vendor shall ensure visit of OEM engineer to site at the time of installation for proper guidance/ supervision. (g) Other applicable standards: - IS: 2629: Recommended practice for hot dip galvanizing of iron and steel - IS: 2633: Method for testing uniformity of coating on zinc coated articles - IS: 6745: Methods for determination of mass of zinc coating on zinc coated iron and steel articles. - IS: 513: Cold rolled low carbon steel sheets and strips - IS: 3063: Fasteners single coil rectangular section spring washers In compliance to Rule 11 and 61 of Indian Electricity Rules, 1956 (as amended up to date), all non-current carrying metal parts shall be earthed with two separate and distinct earth continuity conductors to an efficient earth electrode.
8.23	Connectors to be provided for end terminations wherever required.

9.1 **Water washing system for SPV modules (Module cleaning system)** PROVISION OF WATER PUMP & REQUIRED PIPELINES –

Bidder must provide at least one water pump along with required pipelines on each shed structure/building on which solar system is to be set up for making the provision of water availability at the roof top for the periodic cleaning of the Solar Panels. The provision of the pipeline and tap points should be sufficient to ensure that all the Solar Panels can be covered from those points. Module cleaning to be done weekly once to get maximum output from the Solar panels as per rated capacity of Solar Power Plant during warranty period/defect liability period/period of maintenance of 05 (five) years from DOC.

1) Vendor shall supply, install and commission permanent arrangement for module washing at the roof-top taking into account site conditions.
2) Water source for cleaning at site.
3) The system shall essentially include the following minimum components:
   a) Surface pump of appropriate size/ rating with starter shall be installed at respective buildings so as to pump water to roof tops. Suitable RCC civil pedestal and Canopy with frame shall be constructed for this arrangement. Arrangement shall have necessary door/lock provision, steel sections/ steel sheets to withstand wind load etc, corrosion protection painting, fasteners etc. Vendor shall submit drawings for BHEL/DMW approval during detailed engineering.
   b) Vendor shall employ armoured electrical cables of suitable size/rating for all electrical connections. Cables with cable accessories (glands/ lugs/ termination hardware etc) shall be in vendor scope of supply and installation. Cabling to the pumps shall be from ACCB. Cables shall be laid/routed through GI cable trays. All cable terminations including the ones at ACCB panels shall be in vendor scope.
   c) UPVC pipes as per relevant IS standards, heavy duty, 6 Kg/sqcm: pump suction/ header pipes (40NB minimum), Feeder pipes (25NB minimum).
   d) UPVC elbows, Tees, bends, couplers as applicable, as per relevant IS standards, for jointing and leak-proof pressurized pipe fittings.
   e) UPVC raiser pipes with ball valves (25NB minimum, metal body, IS marked) and reducer nozzles for fitting hose pipes, at every delivery point. Every raiser pipe shall be fixed on the roof using concrete (PCC) pedestal construction.
   f) Delivery points shall be made available as per solar array layout and space provisions at roof-top. Accordingly, number of delivery points shall be provided for cleaning of the entire solar array.
   g) Air release valve fittings (metal body, IS marked) for header pipes at suitable locations.
   h) Air release valve fittings (metal body, IS marked) for feeder pipes at suitable locations.
   i) Control gate valve for header pipes; for maintenance (IS marked) at suitable locations.
   j) Control gate valve for feeder pipes; for maintenance (IS marked) at suitable locations.
   k) Non-returnable valves (NRV) shall be provided wherever applicable.
   l) Hose pipes, heavy duty 15NB minimum

	m) All necessary hardware items such as GI clamps/ screws/ bolts/ nuts/ plain washers/ spring washers etc wherever applicable.

	(4) Any other items as required to complete the technical/ operational requirements of module washing system. (5) Vendor shall design and submit the piping and instrumentation diagram (P&ID) of water washing arrangement including the physical sequence of branches, reducers, valves, pressure gauge, delivery points and location of pumps and water storage tanks for BHEL/DMW approval during detailed engineering. The diagram shall show locations of water source, pipelines, valves, delivery points etc as superimposed on the solar array layout, Bill of materials (item-wise description, type / rating, make, model number / part number, quantity) of water washing arrangement with necessary calculations of water flow / pressure / discharge etc for BHEL/DMW approval during detailed engineering. (6) All necessary labour, machinery, tools, instruments shall be in vendor scope.
9.2	**Fire fighting systems: Fire extinguishers** **FIRE EXTINGUISHERS:** The firefighting system for the proposed power plant for fire protection shall be consisting of: a) Portable fire extinguishers b) The installation of Fire Extinguishers should confirm to TAC regulations and BIS standards. Vendor shall provide fire extinguishers as follows for fighting fire electrical wiring, live machinery fires and flammable liquid/ gas as per recommendation by relevant fire safety authority and as per relevant standards IS: 2171 and IS: 10658 marked. Make shall be Safex/ Ceasefire/ Vintex/ Unicare fire safety or any other reputed equivalent subject to BHEL/DMW approval. ▪ DCP type (ABC) 9Kg designed/tested IS 15683/ IS: 13849 with safety release valve, NRV and CE approved valve. Dry powder IS 14609 with standard accessories. ▪ CO2 type Hand 9 Kg with wheel. Designed/tested IS 2878 complete with hose, screw valve, CO2 gas IS 1522, cylinder IS 7285, valve IS 3224. Tested at 250 Kgf/cm2. Quantity shall be as per vendor scope of supply (deliverables) in this specification.

9.3	**Identification marking of cables using cable tags** 1. Cable tags shall be provided at both ends of the cables: at SPV modules, string Inverters, data loggers, ACCB boxes, LTPDB panels and so on. 2. Cable tag shall be of rectangular shape. 3. Cable tag shall be of 2mm thick aluminium with number punched (embossed) on it and securely attached to the cable by not less than two turns of 20 SWG GI wire conforming to IS:280. 4. Reference shall be made to "**Cable installation methodology**" of this specification. Vendor shall submit the technical details of cable tags, ID numbering scheme for BHEL/ DMW approval during detailed engineering.
9.4	**Cable route markers** Cable route markers and joint markers for underground cables shall be provided along the route of the cables as per section "**Cable installation methodology**" of this specification.
9.5	**Electrical insulation mat** (1) Vendor shall supply electrical insulating mats as follows: (a) Reputed make as shall be approved by BHEL/ DMW (b) As per IS: 15652:2006 (c) Class B (d) Thickness 2.5 mm minimum (e) Size = 2m x 1m minimum, exact size shall be as approved by BHEL/DMW during detailed engineering. (f) Colour: to be approved by BHEL/DMW (g) Marking of IS standard on the mat (2) Test certificate shall be provided by vendor (3) Quantity shall be as per vendor scope (deliverables) list in this specification.
9.6	**Bi-Directional meter of 0.5 S class along with CTs, PTs, Outdoor enclosure as per DISCOM** A Bi directional electronic energy meter shall be supplied, installed and commissioned by the vendor at appropriate place at MRS (main receiving station) of DMW. The vendor shall take NOC/approval for the connectivity, technical feasibility and synchronization of the Solar plant with distribution network and submit to DMW through BHEL before commissioning of the plant. The Bi directional meter shall be of 0.5 S class of type and make as approved by DISCOM and shall be installed for measurement of Import and export of energy. If required by the DISCOM or CEA, Reverse power relay arrangement shall be provided at appropriate location/s.

10.0 Pre-commissioning inspections/checks/tests on AC side, coordination/liaison with state / central departments/ CEIG etc for necessary approvals/clearances for commissioning, synchronization with grid/ plant commissioning:

Bidder shall prepare required drawings for the systems being installed at DMW along with details of the existing Power system at DMW for submission to DISCOM/CEIG for obtaining preliminary approvals prior to start of works and subsequently before taking up commissioning.

10.1	**Pre-commissioning inspections / checks / tests on DC side** Vendor shall carry out following minimum pre-commissioning checks: (1) Verification of firmness of SPV module interconnections (MC4) (2) Verification of firmness of DC cable terminations at string inverters using torque wrench (for the specified torque values) (3) Verification of firmness of RS485 cable terminations (4) Verification of firmness of all earthing connections (5) Cable megger/ continuity check for all DC power cables (6) Measurement of open circuit voltage of individual strings (7) Measurement of earth resistance at individual earth pits of solar array: (a) as disconnected from earth mat grid and also, (b) as connected to earth mat grid (8) Submission of test reports for BHEL/DMW approval
10.2	**Pre-commissioning inspections/checks/tests on AC side, coordination/liaison with state / central departments/ CEIG etc for necessary approvals/clearances for commissioning, synchronization with grid/ plant commissioning:** Pre-commissioning inspections / checks / tests and coordination / liaison activities with state / central departments / DISCOM/ CEIG etc for necessary approvals / clearances for commissioning, synchronization with grid and post-commissioning operation of the plant. (Clearances shall include obtaining prior approvals for all applicable drawings/ documents etc from concerned state / central departments / DISCOM/ CEIG etc.)

A	Basic checks	
	A1	Tightness checks:
		1) Terminations of AC power cables at string inverters, data loggers, ACCB box, LTPDB panels. 2) Terminations of Control/ Instrumentation/ Data/ Communication cables wherever applicable. 3) Terminations of earthing at all electrical equipments/ panels. 4) Terminations of earth chambers of vendor scope
	A2	Electrical continuity checks

	A3	Megger (1kV) checks for all 1.1kV grade cables
	A4	AC/DC supply checks at TBs of all electrical panels/ DBs.
B	Pre-commissioning electrical tests:	
	B1	String inverters
		1) DC side open circuit voltage 2) Vendor to provide technician support to service engineer of string inverters for all other pre-commissioning tests as per OEM checklist
	B2	Earth resistance measurements for all chambers of vendor scope
		1) With electrode connected to grid 2) Without connecting electrode to grid
C	Testing agency	
		Credentials of testing agency shall be submitted to BHEL for approval prior to awarding of work.
D	Coordination and Liaison activities to be carried out by vendor:	
		1) Liaison responsibility for getting the above approvals rests with vendor. 2) Following are the areas of approval, as applicable, for the SPV-side portions including solar array and up to 1.1kV side connection point. (a) Schemes/ layouts/ calculations such as solar array layout, lighting arrestor layout, module cleaning system, cable trench layout, fire alarm system etc. (b) GTP/ datasheets/ GA drawings/ Bill of materials, MQP etc of supply items. (c) Factory test reports of supply items including BHEL-supplied items. (d) Interaction with supervising/ inspection agency such as MRT departments, Transco, CEIG, CEA etc, as applicable, for applying to them/ inviting them for supervision/ inspection at site. (e) Interaction/ coordination with customer (DMW) in the above process as and when required. (f) All necessary testing kits/ instruments shall be arranged as per the requirements of inspection agency. Basic instruments such as digital multimeter, 5kV digital megger with PI feature, earth resistance meter, clamp meters etc shall be organized at site at the time of inspection. Competent electrical technician shall also be made available at the site. (g) Subsequent to site inspection by the concerned agency, vendor shall support the upstream 1.1kV evacuation line/ contractor in following-up with them to obtain their clearance for line charging/ grid synchronization. (h) Vendor shall implement all the observations of CEIG related to SPV-side portion including solar array and up to 1.1kV connection point to metering panel at plant end.
E	Commissioning of power plant	

				1) Vendor shall be cable of extempore trouble-shooting in case of any technical problems encountered with roof-top as well as 1.1kV installations. 2) Vendor shall organize all necessary tools/ measuring instruments required to operate the various electrical equipments at the time of commissioning: Digital megger 5KV with PI feature, Earth resistance tester, Phase sequence meter, Clamp meters etc, discharge rods, PPE safety gadgets (helmets, shoes etc).	

11.0 General conditions applicable during supply, installation and commissioning phase

11.1	As already mentioned in previous clauses, vendor shall organize construction power supply on their own. Accordingly, DG sets of suitable capacity shall be deployed by the vendor for construction works.
11.2	Similarly, water required for construction works is available at site. This can be utilised for civil work.
11.3	All machinery such as cranes, hydra, JCBs, forklifts, transport trucks, trolleys etc necessary for movement and installation of materials / panels / equipment etc shall be organized by the vendor.
11.4	All necessary tools and tackles such as crimping tool (including heavy duty tools for crimping copper cables up to 50 sq-mm), screw driver set, power screw drivers, cutting pliers, nose pliers, spanner sets, adjustable spanners, hole-saw cutter set, bending tools, torque wrenches, hack saw blades, pipe wrenches, flat / round files, drilling machines, welding machines, concrete mixers, steel bar bending tools / templates/ shuttering materials for RCC works, spade, shovel, hammer etc shall be organized by the vendor.
11.5	All necessary measuring instruments such as measuring tapes, digital multimeters, vernier calipers, electrical testers, digital meggers (1kV, 2.5kV, 5kV), lamp load testers for solar array string measurements, earth resistance meters, weighing machines, water level indicators etc shall be organized by the vendor.
11.6	In case project is not completed as per BHEL scope due to reasons arising out of materials from BHEL end/vendor's end, contractor has to complete the job at later stage without any extra charges. No overrun charges shall be paid in case of extension of project schedules
11.7	Vendor shall make their own arrangements for necessary food, drinking water and accommodation for their labour and employees posted at the site. Similarly, food and drinking water required at the site, during the construction operations, shall also be in scope of vendor.

11.8	Vendor shall organize all necessary steps to meet statutory requirements such as labour license, PF, ESI etc and also ensure compliance with relevant acts such as minimum wages act, income tax act, employee insurance act etc for their labour deployed at site.
11.9	Vendor shall maintain updated labour register, with name, age, qualification, salary, attendance details etc at the site.
11.10	Vendor shall use danger boards, wherever required, to ensure safety of the persons during the work at site.
11.11	Vendor shall adhere to all necessary safety norms such as use of helmet, safety harness, goggles, hand gloves, gumboots, aprons etc. It is the ultimate responsibility of the vendor in all respect to prevent accidents at the site and safeguard their labour from accidents.
11.12	Vendor shall, at the completion of every work, clear off the debris, which resulted out of the work. In case of excavation work such as earth mat trench, cable trench etc, vendor shall finish the land neatly with necessary levelling, rolling etc.

11.13	Vendor shall carry out the work without causing inconvenience to other contract groups at the site. In case of conflicts with other groups, vendor shall ensure that the matter is resolved at once amicably so that the progress of work is not affected.
11.14	Any damages on the building, structures etc attributable to the acts of labour / employees of vendor shall be rectified and made good by the vendor at their own cost.
11.15	No child labour shall be employed for execution of the present contract.
11.16	Any miscellaneous materials, which are found essential for technical completion of the contract but not mentioned explicitly in this specification, shall be deemed to be included in the specification. Accordingly, such materials shall be included by the vendor as part of the offer.
11.17	Special instruction for earthing: In compliance with Rule 33 and 61 of Indian Electricity Rules, 1956 (as amended up to date), all non-current carrying metal parts shall be earthed with two separate and distinct earth continuity conductors to an efficient earth electrode. Accordingly, all cases such as cable support structures, cable ladders, cable trays etc as applicable shall be earthed.
11.18	BHEL/DMW shall witness routine/ acceptance/ type tests performed at manufacturer works for the items supplied by vendor. Vendor shall accordingly provide inspection call to BHEL with submission of quality assurance plan in advance. For the items bought out from dealers, test certificates, as per relevant IS / IEC standards, as issued by manufacturer shall be submitted to BHEL. However, prior approval shall be obtained from BHEL/DMW for procurement of the item from dealers.

11.19	Field Quality Plan / Quality control system Vendor shall set up a field quality control laboratory with full set up to facilitate testing of all construction materials in accordance with FQP (Field quality control plan) as approved by BHEL/DMW. Vendor shall deploy a well experienced quality control engineer to monitor all QC activities at site as per approved FQP. Specifically with reference to civil works, vendor shall submit all concrete mix designs and bituminous mix designs for BHEL/DMW approval before starting of the work. All the third party testing should be conducted in NABL approved laboratories only. Vendor shall submit the FQP for the civil construction works before starting of the works for approval of BHEL/DMW.
11.20	Any deviations shall be discussed with BHEL/DMW site engineers and implementation shall be taken up only after approval from BHEL /DMW.
11.21	Vendor shall submit periodic status report, on daily as well as weekly consolidated basis, to BHEL on the progress of the contract.
11.22	Vendor shall, as and when required by BHEL/DMW, participate in the review meetings conducted by BHEL/DMW at project site, BHEL-EDN (Bangalore), BHEL-Corporate office (New Delhi), DMW office (PATIALA) etc.
11.23	General Guidelines a) Any civil or electrical work which is not mentioned or included in this tender document but necessary for functional requirements of the plant shall be carried out by vendor.
	b) Vendor shall prepare all designs / drawings based on the specifications given in the tender and in light of relevant BIS/IS/ equivalent standard. c) Vendor shall provide type test reports and datasheet/ GTP for all equipments covered under vendor scope of supply. d) All work shall be carried out in accordance with the latest edition of the Indian Electricity Act and rules formed thereunder and as amended from time to time.
11.24	Vendor has to pay the plant electricity consumption charges, internet & telephone charges etc during the O&M period.
11.25	Vendor shall submit periodic status report, on daily as well as weekly consolidated basis, to BHEL on the progress of the contract.

12.0 Operations and Maintenance

12.1	**Date of commencement of operations and maintenance** Zero date for O&M shall be the actual date on which the power plant is commissioned with synchronization of string inverters to grid / export of power and its acceptance after "Prove out" procedure to DMW/IROAF. O&M shall be for 5 years with scope covering both the solar side up to the LT evacuation.
12.2	**O&M personnel** 1. Vendor shall deploy following minimum personnel: (a) Technical / administrative / office personnel • One experienced technical-cum-administrative in-charge having diploma in electrical/ electronic engineering and experience with overall responsibility for complete plant operations. The in-charge shall have competence to deftly handle technical and operational / crisis problems. • Two working level staff with ITI / diploma level qualifications in engineering with competence for operating electrical/ electronic/ mechanical equipment, taking measurements, data logging / maintaining registers, preparation of reports in computer. • In addition to the above, separate set of persons shall be deployed for water cleaning of SPV modules on daily basis. Number of persons shall be decided considering maximum 7 days per cleaning cycle. 2. Vendor shall provide uniforms for the O&M staff. 3. Similarly, O&M personnel shall be provided with raincoats, toolsets, earthing rods, safety gloves, safety harness, safety goggles, gumboots, helmets and all other personal protective equipment (PPE) that will be relevant to ensure human safety. 4. Names, qualification, work responsibility of personnel shall be listed on a display board at an appropriate location as suggested by the end customer. 5. Attendance registers shall be maintained for all the staff, workmen.

	6. Vendor shall ensure statutory requirements such as ESI, PF, labour license, BOCW etc as applicable for their O&M personnel posted at site. 7. BHEL/DMW shall have right to disallow any O&M employee, if found unfit to perform. BHEL instructions issued in writing shall be binding on vendor who shall replace the person. 8. O&M personnel at site shall conform to general regulations in force at site and to any special instructions from BHEL/DMW administration. 9. O&M personnel at site shall be deemed to be aware of damages and risks incidental to conditions of rooftop place & works from time to time and BHEL/DMW shall not be responsible for any injury to personnel arising there from. 10. Training to O&M personnel It is the absolute responsibility of vendor to ensure imparting of necessary training to their O&M personnel to get them acquainted with the operations of various electrical and mechanical equipment of the power plant. For this purpose, vendor shall identify the O&M personnel well in advance and involve them during installation and commissioning stages so that they become well versed with various functional aspects of the power plant. 11. Availability of O&M personnel at power plant (a) Vendor shall ensure that operating staff are present in the power plant during 6:30 AM – 6:30 PM every day. (staggered shift to cover duty time) (b) Vendor shall ensure that certain minimum operating staff are present at the power plant even on festivals, public holidays and any other unique occasions so that the plant is run under competent supervision on all days. 12. O&M personnel shall, strictly, not use any part of the power plant for their personal / residential purposes. Their presence at the plant shall, strictly, be meant only for the purpose of operation and maintenance of plant.
12.3	O&M operations – **daily basis** (1) Water cleaning of SPV modules with one cycle of cleaning of all the modules of the power plant not exceeding 7 days. In order to fulfil this requirement, vendor shall organize all necessary resources such as (a) manpower (number of persons for the cleaning work), (b) number of simultaneously-operating teams, (c) machinery/ materials/ accessories such as pressurised water pumps, hose pipes, nozzles etc. Whenever the integral module washing system of the plant is not operational due to reasons of any kind, vendor shall make alternate arrangements such as water tankers, water delivery mechanisms (pumps,

	hoses, nozzles and other fittings), operating personnel etc required to fulfil the above specified cleaning of max 7 days/cycle. (2) Logging of DC, AC, and grid parameters (current, voltage, power, energy etc) at string inverters/ LTPDB/ metering panels, equipment tripping/ breakdown, grid outage etc as per BHEL formats.

12.4	O&M activities – **monthly basis** (1) Inspection of fire extinguishers (weight, pressure indication, physical status etc) followed by refilling actions, if necessary, based on indications. Report to be submitted as per BHEL approved recording formats. (2) Earthing resistance measurements for solar array structures, various equipment and lightning arrestors: measured values shall be recorded in registers and reported to BHEL as per BHEL approved recording formats. (3) Submission of values / status of plant parameters and events for the corresponding month, as below, as per BHEL approved formats: a. Daily values of solar array at string inverters, ACCB, LTPDB panel levels b. Daily values of weather parameters (solar energy, wind speed, ambient temperature) c. Events (with date, time) of faults / tripping / breakdown of equipment d. Events (with date, time) of grid outage e. Events (with date, time) of equipment damages, accidents and thefts f. Activities of module cleaning (4) Monthly reports shall be submitted to BHEL for all the above data. (5) Energy generation / meter reading report (6) to be prepared and submitted to the concerned state/central department. Signatures from BHEL/DMW representatives shall be obtained wherever required.
12.5	O&M activities - **quarterly basis** (1) Cleaning of string inverters, ACCB, LTPDB panels etc to remove accumulated dust. (2) Monitoring and status review, followed by rectification/ calibration/ replenishment/ replacement actions as necessary and applicable for following: (a) Spare items of all electrical equipment (b) First aid box items - medicines and accessories (c) Safety gadgets (d) Tool kits and measuring instruments (e) Pumps, starters

	(3) Submission of quarterly report on above activities to BHEL.
12.6	O&M activities – **yearly basis** (1) Painting of earthing chambers if required based on conditions of rusting. (2) Checking tightness of hardware in MMS structures and tightening wherever required. (3) Checking tightness of power cable terminations in SPV modules (MC4), string inverters, ACCB, LTPDB.
12.7	O&M activities - as and when required (contextual basis) (1) Monitoring and operation of plant electrical equipment as and when required: (a) ACB and MCCB on/off operations on LT side (b) String inverter operations: review/selection of settings, monitoring the DC/AC/ event/ fault status parameters (c) Maintaining SCADA/Data logger system (d) Water pumping operations
	(2) Removal of garbage from solar array field, logging in registers with signatures of operating persons and in-charge. (3) Coordinating and liasoning, on behalf of BHEL, and obtaining renewal of statutory licenses, clearances and approvals from state departments such as electricity boards, CEA/CEIG etc. (4) Repair and replacement of vendor-supplied items, by vendor, with urgent action plans and implementation, when the items are found non-working / damaged. The same shall be reported to BHEL within 12 hours from time of observation. (5) Reporting, on an immediate basis (within max 2 hours) of functional problems / damages in BHEL-supplied items to facilitate repair / replacement by BHEL. Further, vendor shall correspond / coordinate with respective equipment vendors / service centers, on behalf of BHEL, for getting the service engineers to the site. Later, coordinating with the service engineers during their visit to site, and assisting them in the trouble shooting process until the problem is resolved. Vendor shall report to BHEL (within max 2 hours) immediately after the problem is resolved. (6) Vendor shall keep updating the spares inventory at the site every time there is consumption of spare items towards replacement. In case of shortage of spares, the same shall be reported on an urgent basis (with max 2 hours) to BHEL. (7) Coordinating with sub-station upon grid failures, line problems etc and implementing the needful steps to restore the plant to normal operation. (8) Theft incidents: immediate reporting to BHEL, filing FIRs with police stations on behalf of BHEL, coordination for site inspection by insurance companies and clearance of insurance claims, logging of events (date, time) and maintaining records. (9) Accidents: immediate reporting to BHEL, coordinating with hospitals, logging of events (data, time) and maintaining records.

13.0 Documents to be submitted for BHEL/DMW approval during detailed engineering

13.1	BHEL/DMW approval shall be obtained for the following technical documents, which shall be submitted to BHEL in phased manner based on priority sequence of activities during detailed engineering (after receipt of purchase order from BHEL).
13.2	Name of vendor / make, model number / part number, specification / sizes / dimensions / drawings / datasheets shall be submitted for all the vendor supplied items.
13.3	GA / SLD / GTP / datasheets / schemes / layouts / BOM/ design calculations etc, as applicable, shall be submitted for the following: (1) MC4 connectors (2) All cables that are in vendor scope of supply (3) ACCB, LTPDB panels (4) Cable glands, cable lugs, cable ties, GI cable trays of all types (5) Routing layout for AC and DC cables and Control cables with locations of string inverters, data loggers, ACCB (6) Underground trenches: routing layout/ trench cross sections etc. (7) Concrete foundations for string inverters, ACCB boxes (8) Steel mounting structures for string inverters, ACCB boxes: GA, BoM etc.
	(9) Lightning arrestors system: foundations, layouts, GA, BOM etc. (10) Module cleaning system: design calculations, layouts, BOM, electrical circuit diagram, water circuit diagram, pump sizing calculation etc. (11) Earth grid for solar array: design calculations, layout, BoM, cross sections etc. (12) Earth chambers: GA/BoM, layout, cross section etc. (13) Fire extinguishers: GTP/datasheets etc. (14) Any other designs/ schemes/ layouts etc as applicable as per BHEL/DMW requirements during detailed engineering.
13.4	Manufacturing Quality Plans for all the vendor supplied items
13.5	Field quality plan for the field work: civil works, electrical works
13.6	Detailed activity-time chart for project implementation
13.7	Detailed manpower deployment schedule
13.8	Installation/ O&M manuals for MC4 connectors, chemical earthing electrodes, lightning arrestors ,surface pumps, fire extinguishers etc.

[illegible]

[illegible]

[illegible]

[illegible]

[illegible]

CONTENTS

1.0	Introduction	
	1.1	Project outline of 950KWp AC solar photovoltaic power plant
2.0	BHEL scope	
3.0	Annexures to this tender.	
4.0	Vendor scope (Broad)	
5.0	Vendor scope (Deliverables)	
6.0	Instructions to vendors on bid submission	
7.0	Technical specification for design/drafting, infrastructure and logistics	
	7.1	Design and drafting of electrical drawings for DISCOM, CEIG submission
	7.2	Temporary site office for vendor's and BHEL use
	7.3	Electrical power/ water for construction, drinking water
	7.4	Construction for safe storage of vendor/BHEL supplied items
	7.5	Unloading, safe storage and movement of items received at site – obtaining Gate entry endorsements for materials and maintaining records with DMW Security
8.0	Technical specification for design, supply and erection works	
	8.1	Preliminary preparation of roof
	8.2	Concrete pedestal casting –Vendor to submit the procedure of pedestal casting to BHEL for approval.
	8.3	Design of MMS -Approved design attached.
	8.4	Preparation of revised array drawings on roofs if required and fabrication dwgs of the MMS for Annexe to be prepared by the vendor. Preparation of shadow analysis report for the roofs as per installation using reputed software such as PVSys, Google sketch and submitting to BHEL
	8.5	Supply of MMS- As per approved design
	8.6	Erection of MMS structure
	8.7	Erection of SPV modules over the MMS structure
	8.8	Series interconnection of SPV modules to form strings
	8.9	Installation of string inverters (Details about nos and type of string inverters as in Annexure 3).
	8.10	Supply and installation of AC combiner boxes (ACCBs)
	8.11	Interconnection of SPV module strings to string inverters
	8.12	Ferruling for 1Cx4 cable

	8.13	Routing of 1Cx4 cable below the SPV modules
	8.14	Routing of 1Cx4 cable in GI cable trays
	8.15	Termination of 1Cx4 (DC side), 3Cx35 (AC side) cables at string inverters & ACCB boxes
	8.16	Supply and installation of LTPDB combiner boxes
	8.17	Laying and termination of cables from ACCB box to LTPDB box
	8.18	Underground trenches and laying of cables from building to building if required or routing cables between adjacent roof tops through conduits/catwalks
	8.19	Laying of cables from each LTPDB to Customer LT points in the building and terminating through suitably rated MCB/MCCB for evacuation
	8.20	Laying and termination of RS485 cables
	8.21	Supply and installation of lightning arrestors for roof-top
	8.22	Earthing for solar array MMS structures, other electrical panels, lightning arrestors
	8.23	Connectors for end terminations.
9.0	Supply and installation of other infrastructure / support systems	
	9.1	Water washing system for SPV modules (module cleaning system)
	9.2	Firefighting systems
	9.3	Identification marking of cables using cable tags
	9.4	Cable route markers
	9.5	Electrical Insulation mat
10.0	Obtaining Preliminary NOC from DISCOM and CEIG prior to commencing works. Coordination/liaison with state / central departments/ CEIG etc for necessary approvals/clearances for commissioning, synchronization with grid/ plant commissioning.	
	10.1	Pre-commissioning inspections / checks / tests on DC side
	10.2	Pre-commissioning inspections/checks/tests on AC side, coordination/ liaison with state / central departments/ CEIG/DISCOM etc for necessary approvals/clearances for commissioning, synchronization with grid/ plant commissioning:
11.0	General conditions applicable during supply, installation and commissioning phase	
12.0	Operations and Maintenance	
	12.1	Date of commencement of operations and maintenance
	12.2	O&M personnel
	12.3	O&M operations – daily basis.
	12.4	O&M activities – monthly basis
	12.5	O&M activities - quarterly basis

	12.6	O&M activities – yearly basis
	12.7	O&M activities - as and when required (contextual basis)
13.0	Documents to be submitted for BHEL/DMW approval during detailed engineering	

1.0 Introduction

1.1 Project outline of 950 KW$_p$ (AC) solar photovoltaic power plant

(a) Bharat Heavy Electricals Limited (BHEL), Electronics Division, Bangalore is setting up 2000 kW solar photovoltaic (SPV) roof-top system at Diesel Motor Works (DMW), Patiala. The scope for this tender is only 950 KWp capacity spread across various Annexe buildings with systems of 50 Kwp, 30 KWp and 20 KWp systems with in DMW Patiala Campus. Details of proposed capacity on each Annexe roof is as per Annexure 2. The PV Array layout attached with this tender are indicative and may slightly vary based on site limitations pertaining to shadow free clear area, electrical load offtake etc which will be fine-tuned during detailed engineering of system at each location/roof prior to execution.

Broad outline of project:

Presently, the power supply to DMW, Patiala is fed from PSPCL (Punjab State Power Corporation Ltd.) through 66KV transmission line stepped down to 11KV at 66/11kV Main Receiving Station (MRS) which is fed to 07 no. Electric Service Station (ESS) in the workshop area and 03no. Electric Service Station (ESS) in township area. 11KV supply at ESS is further stepped down to 415 V-three Phase and is fed to industrial and residential loads.

The Solar Power Plant is intended to be synchronized with the 415 V- three Phase Electric Service Stations (ESS) in the workshop area. All the equipments required for generation of electrical power from Solar Power Plant, converting it to AC power and feeding into the 415 V- Three Phase Grid forms the Scope of Work except for BHEL supplied items. All the equipments required to complete the grid connection with the existing system shall form the Scope of Work. For interconnection of Electric Power generated by Solar Power Plant with the grid at 415V-three phase, multi point Solar Photo Voltaic (SPV) systems, each having a capacity of maximum up to 100 KWp, shall be provided. The surplus power shall be fed to PSPCL feeder through net metering having all controls & accessories required for satisfactory power supply system.

The Bidder shall be required to take approval/NOC from the concerned DISCOM for the connectivity, technical feasibility, and synchronization of SPV plant with distribution network and submit the same to BHEL before commissioning of SPV plant. Metering and grid connectivity of the roof top solar PV system at LTPDB level under this Tender would be the responsibility of the Bidder in accordance with the prevailing guidelines of the concerned DISCOM and / or CEA. BHEL through project owner IROAF/DMW shall facilitate the procedure for connectivity.

However, the responsibility for filing applications with DISCOM/CEA/CEIG, co-ordination, site verification and obtaining clearance for Grid connection as well as metering shall be with the bidder only.

The Scope of Work given above is only indicative. The detailed Scope of Work has been described in the Tender Document. Any supplies which have not been specifically mentioned in the Tender Document but which are necessary for the design, engineering, manufacture supply, installation, commissioning & performance or completeness of the project shall be provided by the bidder without any extra cost and within the time schedule of commissioning of the SPV plant.

The Bidder(s) is advised to visit the Site of work and acquaint himself/themselves with the details of existing roof top structures, Site condition, the availability/supply of raw materials, accessibility, site for labour camps, stores, go-downs, office, extent of lead/lift in work, availability of skilled and unskilled labour, local tax structure etc. that may be encountered in the course of execution of Work. He/they should familiarize himself/themselves fully with the conditions at Site before submitting the Bid.

(b) Address/ contact particulars of official at DMW Patiala for seeking permission to visit site which is a restricted area: Workshop Electrical Engineer, DMW, Patiala. Visit to site shall be co-ordinated by BHEL for one day after obtaining necessary visit permission from DMW tentatively by 14th / 15th July'17. Vendors to submit queries along with details before 12th July'17 to facilitate entry to DMW premises.

(c) Details of distribution of 950KWp of SPV systems on various identified roof tops is as per Annexure -2. The array sizes may be slightly revised for specific roofs during installation subject to availability and confirmation of electrical loads in the building.

(d) Other salient features like access ladders wherever required, lightning protection, water washing system for SPV modules, metering through MFM and DISCOM approved meters, fire protection equipment, earthing system, mounting arrangement for String inverters, Data logger and ACCB Panels at roof top locations, LTPDB panels inside shop floors etc.

2.0 BHEL scope

(a) Supply of SPV modules
(b) Supply of string inverters with data loggers.

3.0 Annexures to this tender:

1. PV-Module drawing and Data Sheet. (Annexure 1)
2. Tentative Capacity possible on each roof (Annexure 2)
3. Tentative Array layouts (Annexure 3)

4. Approved MMS drawings for Annexe buildings. (Annexure 4)
5. Single Line diagram (SLD) of 50 kWp, 30 Kwp, 20 Kwp SPV systems and SLDs of ACCBs and LTPDBs for various buildings (Annexure 5)
6. Key plan of buildings at site (Annexure 6)
7. Photographs of Annexe buildings for typical information (Annexure 7)

4.0 Vendor scope (broad):

(a) Receiving and unloading of BHEL supplied PV-Modules and String inverters and their storage.

(b) Supply of all BOS items (as per list of deliverables) and their receipt and storage upto installation/commissioning activities including BHEL supplied items shall be in vendor scope.

(c) For certain identified DC and AC side activities of the power plant as brought in this specification, vendor shall carry out design, engineering, drafting of drawings, obtain approval from BHEL/DMW-Patiala for the drawings, manufacture/ testing/ inspection at manufacturer's works, packing, supply, transportation, transit insurance, delivery/unloading at site. Further vendor shall carry out civil works, installation, pre-commissioning tests, Prior clearance/approval from Local power Utilities (DISCOM) / CEIG etc., for commencing works and later for plant commissioning as identified under this specification.

(d) Scope also includes operations and maintenance of all systems for a period of 5 years.

(e) Vendor shall have capability for design of systems such as cable laying/ routing/ dressing/ terminations, underground cable trenches, foundations for pedestals of Inverters and LT panels, water washing system for SPV modules, lightning arrestors, earth mat grids, earth chambers etc as envisaged under this specification.

(f) In case vendor does not have design/drafting capability as above, they shall tie up with competent design consultants. In such a case, vendor shall submit the credentials of the proposed consultants to BHEL after receiving purchase order from BHEL. Subsequent to approval by BHEL, vendor shall award the work on the consultants. All drawings/ design documents shall be originated by the consultants, endorsed by the vendor clearly stating the name of the project, names of clients (BHEL/IROAF/DMW-Patiala), drawing/document number, revision number, number of sheets etc. Details of drawings/ design documents to be submitted are brought out under various sections of this specification.

(g) All civil related works shall be tested as per BHEL/DMW-Patiala-approved FQP that will be issued during the course of project execution. All third party testing shall be carried out only at NABL accredited laboratories (or) Government laboratories.

(h) Insurance :

1) Vendor shall be required to affect Transit Insurance to the supplies under their scope, under an Insurance policy covering third party liability.
2) The transit Insurance shall cover transit of BOS (Balance of system) /Supplied goods from BOS works / BOS sub-vendor works to storage location in Patiala and further to various building sites in DMW-Factory.

3) Insurance charges, renewal premiums shall be borne by the vendor. It is the responsibility of vendor to maintain the Insurance policy in force for the entire duration of contract. In case of any loss / claim under the policy, the contractor shall immediately inform the same to BHEL and DMW and lodge the necessary claim and take all measures required for settlement of claim and protect the interest of BHEL, DMW. In case of any delay / lapse on the part of BOS vendor, the loss shall be made up by them by replacing the equipment under claim without waiting for Insurance settlement.
4) Transit insurance for BHEL supplied goods for the project up to Storage location in PATIALA and further up to various buildings is in scope of BHEL.
5) A comprehensive Storage cum Erection Cum Commissioning policy shall be taken by BHEL for insurance for entire project supplies and is not included in Vendor scope.

(i) Warranty :

The successful bidder shall provide a warranty covering the rectification of all defects in the design of equipment, material and workmanship of manufacturing of equipment for a period of 12 (Twelve) months after satisfactory commissioning. The “commissioning date” for purpose of Start of Warranty will be the date of commissioning of the last item under BOS Vendor scope.

Note: The above is only a broad outline of vendor scope for the sake of introduction. The detailed vendor scope is elaborated under various other sections of this specification.

5.0 Vendor scope (deliverables)

The table below briefly outlines the vendor scope of work. Vendor shall submit the offer (in two part bids) as per this list and quantity.

A) Deliverables for Package -(950 KW) =

#	Item Description	Approx Qty	Unit
1.	Module mounting structures –MMS for Annexe buildings may be designed by vendor suiting to roof top if alterations are found necessary during installation – PCC Civil pedestals at Annexe can be precast type of min size 350 x 350 mm with suitable height	1	Set
2.	4 sq.mm Cu, XLPE, FRLS, uv protected unarmoured DC Cable, 1.1 kV	9500	Mtrs
3.	1.1 KV, 3.5C X 10sqmm Al, XLPE, armoured FRLS cable as per IS : 7078 (for water washing system pump power supply)	840	Mtrs
	1.1 KV, 3.5C X 10 sqmm Copper XLPE, armoured FRLS cable as per IS : 7078	1000	Mtrs
4.	1.1 KV, 3.5C X 16 sqmm Copper XLPE, armoured FRLS cable as per IS : 7078	600	Mtrs
5.	1.1kV, 3.5CX25 sq.mm Copper XLPE, armoured FRLS cable as per IS : 7078	650	Mtrs
6.	1.1kV, 3.5CX50 sq.mm Copper XLPE, armoured FRLS cable as per IS : 7078	200	Mtrs
7	ACCB 1 In 1 Out	24	Nos
7	ACCB 2 In 1 Out	2	Nos
8	LTPDB with MFM and Unidirectional Meter as per DISCOM/PSPCL requirements and spare MCBs for cable termination points in customer LDB evacuation points as required	26	Nos
9	Weather proof Male & Female Snap-on (MC4 type) Connectors for 4 sq.mm	700	Set
10	Cable tray 100mm(W)X50mm(H)X2mm(T)- Perforated type GI with coupler plate, H/W and cover of 2 mm Thk	3175	Mtrs
11	Lightning arrestor Copper Globe type with installation arrangement	28	Nos
12	Chemical earthing Material: Electrodes, backfill compound etc. For LA, MMS, String inverter, ACCB, LTPDB earthing	140	Sets
13	25X3 mm GI strip for MMS and roof structure earthing	2440	Mtrs
14	50 X 3 mm GI/ GI strip of Equivalent cross section for LA , string inverter & LTPDB earthing	2170	Mtrs

15	Tool Kit & Equipment : Qty for 1 Set a) Crimping tool for MC4 type Snap on connectors - 4 no b) Screw Drivers Set – 4 No., c) Plier – 4 No, d) Spanners Set - 4 No., e) Digital Multimeter – 4 No.(1000V AC & DC, 100A range)- Make: Meco /WACO, f) Digital clamp meter- 4 No (AC & DC 100A)- Make: Meco/WACO, g) Allen keys set - 4 No. h) Earth resistance tester – 1 no. Make : WACO/equivalent i) Megger (0 – 1000 Volts) – 1 no. Make : WACO/Equivalent	2	SET
16.	RS-485 compatible 2PX0.5 sq.mm copper armoured cable	1250	Mtrs
17.	Fire Extinguishers and Safety Equipments: Qty for 1 Set a) Dry powder type Extinguisher (9kg As per IS:13849/IS:15683) - 1 nos, b) CO2 type Extinguisher (9kg as per IS:2878/IS:15683) - 1 nos, c) Shock Treatment Chart – 1 nos, d) First Aid Box - 1 nos	17	Sets
18.	Module cleaning system: As per requirement specified elsewhere in tender	1	Set
19.	Miscellaneous Supply items: a) Cable ties: As required. b) Danger plates with necessary fixtures – As required, c) Marking plates for structures, LAs, Earthing pits & cables routing tags for cable tracing – As required, d) Plant name Board - As required, e) Lug for Terminations at LAs, earth rods, LTPDB panel etc	1	Set

	(relevant make, type, size) - as required, f) MS Ladder with hand rail - As required at all roof tops where SPV systems have to be accessed. To be supplied and fixed firmly with roof and ground surface. Refer typical BHEL design. g) String inverter/ACCB/ Datalogger mounting angles with foundation and canopy h) Ferrules - as required, i)Rubber Mat 1.1KV Grade 2.5mm thk as per IS – As required per LTPDB.		
20	Spares for ACCB, LTPDB ETC –Qty as per spec.	1	Set
21	Operation and Maintenance for 5 Years of 950 KW Plant.	To be accounted over 20 Quarters (1 quarter = 1 AU)	AU

6.0 Instructions to vendors on bid submission

6.1	Offer shall be submitted in two-parts (Two part-bid). Both parts shall be in separate sealed envelopes as per instructions in tender. The individual envelopes shall be enclosed in a common bigger envelope with markings (address etc) on the envelope as per instructions provided in tender.
6.2	First-part shall be techno-commercial bid. Following details shall be furnished: 1. Technical offer with covering letter expressing acceptance to BHEL tender specification 2. Separate list clause-wise in case of deviations, if any 3. Filled-up enclosures as per BHEL formats (meant for first-part) provided in tender
6.3	Second-part shall be price bid with filled up enclosures as per BHEL formats provided in tender.
6.4	In addition to the above instructions, tender document provides detailed instructions for bid submission. Vendor shall submit the bid based on instructions in tender document.

Note: This is a no deviation specification. In case of any clarifications needed in this specification, the same needs to be communicated in writing at least five days prior to the technical bid opening date.

7.0 Technical specification for design/drafting , infrastructure and logistics

#	**BHEL specification** **Note:** Design and drafting and logistics is not a separate billing item. Charges for all these activities shall be deemed to be absorbed in the related supply and I&C items.
7.1	**Design and drafting** Vendor shall either have in-house design/drafting expertise (or) shall outsource consultancy in case of inadequacy of internal expertise. Vendor/ their consultant shall carry out electrical/ mechanical / civil design computations wherever applicable. Typical design/drafting areas are as listed below: (1) Outdoor/underground cable trench layouts/cross sections: LT/Control cables (2) Layout of lightning arrestors with area coverage / protection calculations (3) PCC precast foundation for lightning arrestor masts: design calculations (4) Water cleaning system for SPV modules with pressure/discharge/sizing calculations (5) Earth mat/Ground electrode /earth grid calculations for DC solar arrays and all AC side equipment and Lightning Arrestors at each building (6) Earth chambers: design (7) Shadow analysis report of PV array on roof tops as per site condition The above list is indicative and not exhaustive. Wherever BHEL/DMW finds it relevant and applicable, vendor shall carry out design and submit documents viz. GA drawings / datasheets / GTP / MQP/ type test reports etc for BHEL/DMW/CEIG/ approval.
7.2	**Temporary site office for vendor's use and for use by BHEL project personnel** Vendor shall make necessary office arrangements such as porta cabin with furniture, electrical points/ fittings etc on their own for use/ occupation at site during the period of project execution.

7.3	**Electrical power / water for construction/ drinking water** (a) Vendor shall organize, on their own, necessary electrical power supply such as DG sets etc required for construction activities and also for porta cabin offices meant for their use. (b) For welding work, vendor to arrange adequate power and length of cables to access all Annexe buildings. (c) For the purpose of execution of the Work, the Contractor shall be permitted to use water supply available at Site free of cost. The Contractor shall also be permitted to use existing Railway Electric Supply and Compressed Air supply for operation of small tools only for the purpose of execution of Work free of cost. However, in case of non-availability for any reason of these facilities, the Contractor shall make his own arrangement at his own cost for the same. (d) Vendor shall arrange drinking water for their staff as well as for BHEL/DMW staff.

7.4	**Construction of yards/sheds for safe storage of vendor supplied items** (a) DMW and BHEL have identified central area within the DMW works for unloading and storing PV modules and String inverters on receipt. Vendor shall, at a suitable location at site, as decided based on discussions with BHEL site engineer, construct closed sheds for safe storage of items such as ACCB boxes, LTPDB boxes, cables etc and other miscellaneous items such as tools, measuring instruments, cable glands/ lugs/ markers, safety gadgets, insulation mats, sign boards etc. The items are to be brought into the DMW campus after necessary Gate entries in DMW Security records and with Gate pass and Register which shall be carefully preserved and handed over to BHEL. (b) These sheds shall have suitable water-proof roof and side walls so to ensure that there are no pin holes or joints through which rain water entry is possible. Also, these sheds shall be designed to withstand heavy wind loads. Lockable door shall be provided to ensure safety of these items. (c) Separate closed shed shall be constructed for storage of civil construction items such as cement bags etc. (d) Similarly, open yards shall be constructed with suitable fencing all around and lockable gate for storage of solar PV modules, MMS structure items, stone aggregate, sand, bricks, steel materials . (e) Area of all storage yards/sheds shall be selected based on sizes of items. Vendor shall, at the time of starting their activities at site, submit drawings/ sketches/ dimensions etc to obtain approval from BHEL/DMW. (f) Wherever applicable, suitable raised platforms / arrangements shall be provided to ensure that the items are not affected by water at the ground level during rain, storm, flood etc. (g) Storage yards/sheds shall be provided with adequate clearance (within the yard) to facilitate movement of concerned transportation vehicles/ equipments such as forklifts, hydra, trucks etc as applicable. (h) Safety of all the vendor-supplied items shall be within vendor scope. Accordingly, vendor shall ensure lock and security for these items.
7.5	**Unloading, safe storage and movement of supply items received at site:** (1) Vendor shall organize all necessary resources such as labour, machinery and tools (cranes, hydra, forklifts, transportation trucks/ trolleys, lifting accessories etc. for unloading the BHEL's as well as vendor-supplied items received at site and subsequent movement to storage yards/sheds. (2) Similar arrangements shall also be made by vendor for movement of the stored items from storage yards/sheds to the exact construction locations within the project site. (3) Vendor shall maintain proper registers/ files/ records of invoices, LRs, delivery challans, material receipt certificates etc. Also, proper records shall be maintained to keep track of material entry (for storage) and material issue (for construction). (4) All such documents shall be suitably preserved for further handing over to BHEL. (5) Safety of items shall be in vendor scope. Accordingly, suitable watch and ward shall be deployed round-the-clock basis.

8.0 Technical specification for supply and erection works

8.1	Vendor should do preliminary preparation of roof as required.
8.2	Vendor to submit the detailed procedure for pedestal casting to BHEL for approval.
8.3	Approved MMS-Design attached.
8.4	Vendor shall based on the Approved MMS Design to prepare fabrication drawings of MMS and general layout available, prepare detailed layout of system for each roof and submit to BHEL. In case there is an increase in MMS tonnage as compared to the typical design given by BHEL due to additional supports required as per specific site conditions, vendor to bear the cost without any cost escalation.
8.5	Supply of MMS as per Approved design.
8.6	**Erection of MMS structure** Vendor shall erect the MMS structure as per approved design. Wherever, welding is carried out, vendor shall arrange for proper grinding and cleaning of the weld surfaces, followed by application of Metal primer and Metallic aluminium paint. Pre-Galvanized parts shall be sprayed with Zinc spray after work.
8.7	**Erection of SPV modules over the MMS structure** Vendor shall mount the SPV modules supplied by BHEL over the erected MMS structure.
8.8	**Series interconnection of SPV modules to form strings** Supply of SPV modules is in BHEL scope. Vendor shall interconnect the SPV modules as follows: (a) Each module is fitted integrally with a junction box having positive and negative polarity cables (4 sq-mm). (b) Positive cable of one module shall be connected to the negative cable of adjacent module. The cables have MC4 type of connectors. One polarity cable has male type connector, while the other has female type connector. (c) This way, 20 modules shall be connected in series. Each set of connections is called as a series string. After placing the purchase order on vendor, BHEL will provide layout drawings that will describe the exact way in which the series strings are formed. Vendor shall implement the interconnection as per these drawings.

8.9	**Installation of string inverters** (1) Supply of string inverters is in BHEL scope. Approximate weight of inverter 50 Kg. (2) On Annexe buildings , the Vendor shall install the inverter stands using 1:2:4 concrete pedestals of appropriate size. This shall be a two-column structure with two independent pedestals of size minimum 350x 350 x 300 (h) mm. The structure shall be made of GI ISA / cold-formed angles of minimum 3mm thick as per IS: 2062, IS: 811, IS: 808 as applicable. (3) Minimum ground clearance shall be 500mm. (4) Structure shall have canopy (as rain shade) made of GI sheet of minimum 2mm thick. (5) All galvanizing shall be minimum 80 microns and as per IS: 4759, IS: 2629, IS: 2633 (6) Vendor shall submit GA of the mounting structure during detailed engineering. All structure/pedestal items including hardware shall be in vendor scope of supply.

8.10	**Supply and installation of AC combiner boxes** (1) AC combiner boxes, ACCB for combining the 3-phase AC outputs of the string inverters at the roof-top, shall be in vendor scope of supply and installation. For ACCB details, refer SLD. (2) ACCB shall be 3-phase, 50Hz, 415VAC, 1.1kV system voltage, outdoor, with canopy, IP55, neoprene gasket for doors/ frame joints, CRCA sheets 2mm (frame)/ 1.6mm (door)/ 3mm (removable gland plate bottom side), painting seven tank process, colour RAL 7032, base frame with section 75mm min/ black painted, panel lifting hooks, Al bus bars as per SLD, RYB colour coded heat-shrinkable sleeves for bus bars, DMW/DMC insulator supports, Copper earth bus, accessible live parts shrouded with FRP/polycarbonate sheets, MCBs for i/c feeders, 25mm min phase to phase clearance, LED indicators for RYB at o/g, colour coded Cu-cable AC/DC wiring (1.5/2.5 mm2 as applicable) etc. For the incoming and outgoing power cables, nickel plated brass double compression glands, copper cable lugs, SS304 plain/ spring washers shall be provided. (3) One extra feeder of 16 A rating shall be provided to meet the various auxiliary supply requirements at the roof-top such as module washing pumps, data loggers through an MCCB etc. (4) MCCB, MCB shall be L&T/C&S/Siemens/ABB/ Schneider or reputed equivalent subject to BHEL approval. (5) Indicator lamps shall be L&T/ C&S or reputed equivalent subject to BHEL approval (6) IS/IEC standards and other general features shall be as per “LT switchgear panel” section of this specification. (7) Vendor shall submit the detailed GA, Single Line diagram (SLD), Bill of materials (BOM), Quality plan (MQP) etc of ACCBs for BHEL/DMW approval during detailed engineering. (8) Spare shall be supplied as follows: (a) MCB: 1 No of 100A, and 4 Nos each of 63 and 32 A and 2 nos. of 16 A. (b) LED indicators: 5 Nos each type (9) Vendor shall install the ACCB boxes using 1:2:4 concrete pedestals of appropriate size on Annexe buildings. The ACCB mounting arrangement shall be a two-legged stand with two independent pedestals of size minimum 200x 200 x 150 (h) mm. The structure shall be made of GI ISA / cold-formed angles of minimum 3mm thick as per IS: 2062, IS: 811, IS: 808 as applicable. (10) Minimum ground clearance shall be 500mm. (11) All galvanizing shall be minimum 80 microns and as per IS: 4759, IS: 2629, IS: 2633 (12) Vendor shall submit GA of the mounting structure along with stability calculations for BHEL/DMW approval during detailed engineering. (13) All structure/pedestal items including hardware shall be in vendor scope of supply.

8.11	**Interconnection of SPV module strings to string inverters** (1) Vendor shall connect each series string of 20 SPV modules to the string inverter using 1Cx 4 cable, copper, XLPO, unarmoured as per TUV 2pfg 1169/08.2007. (2) Cable shall be vendor scope of supply. (3) Vendor shall also supply plug connectors of MC4 type, each set having a pair of male and female parts, to join both the cables.

	(4) MC4 connectors shall have rating of 1000VDC (IEC), rated current of 30A, Type approved by TUV Rheinland for product safety. (5) Make: Multicontact, Bizlink, Sunlont, Twinsel or other reputed equivalent subject to BHEL/DMW approval during detailed engineering. (6) Sets of tool kits (with box enclosure) shall be supplied as per Deliverables list. This shall include crimping plier MC4, open end spanner set MC4, stripping plier MC4, socket wrench insert to tighten, socket wrench insert to secure etc.
8.12	**Ferruling for 1Cx4 cable** 1) For 1Cx4 DC solar array cable, vendor shall provide UV resistant ferrules printed with source/destination identification of cable connection. Printing details shall be submitted for BHEL/DMW approval during detailed engineering. Printing shall be of appropriate size to ensure readability. 2) Ferrules shall be provided on both the termination ends: module end, inverter end. 3) Supply of ferrule shall be in vendor scope. Make shall be reputed brand. Approval for make/ type/ colour/ dimension etc shall be obtained from BHEL/DMW prior to procurement.
8.13	**Routing of 1Cx4 cable below the SPV modules** (1) 1Cx4 cables connecting the SPV module strings to inverters shall be suitably routed below the SPV modules and along the horizontal purlin member of MMS structure. Also, the cables shall be fastened to the purlin using UV resistant cable ties that shall be in vendor scope of supply. (2) Spacing between two adjacent cable ties shall be so chosen as to ensure that there is no loose hanging of cables. (3) Cable ties, nylon polyamide 6.6 UV stabilized black, UL94 flammability rating V2, operating temperature up to 85 deg C, shall be used to arrest any possibility of movement or sagging. Make: 3M, Phoenix contact, Weidmuller, Hellermanntyton, Panduit or other reputed equivalent subject to BHEL/DMW. Width of the cable ties shall be minimum 4.5 mm. Length shall be so chosen as to ensure that the bunched cables are held firmly to the MMS structure. During detailed engineering, BHEL/DMW approval shall be obtained for the selected brand and sizes of cable tie.

8.14	**Routing of 1Cx4 cable in GI cable trays** (1) Where 1Cx4 cables run between two adjacent rows of structure and also where the cables run on the roof-floor up to string inverters, routing shall be on GI cable trays Wx Hx t = 100x 50x 2 mm, perforated type, with GI cover of minimum 2mm thick, coupler plates, GI hardware as per relevant IS standard. Suitable flexible PVC conduit shall be used wherever required for covering cable at entry into GI cable tray. (2) Vendor shall submit the make, part number, GA, BoM, datasheet etc of the cable trays for BHEL/DMW approval during detailed engineering.

8.15	**Termination of 1Cx4 (DC side), 4C AC cables at string inverters & ACCB boxes** (1) 1Cx4 cables of positive and negative polarities originating from SPV module strings shall be terminated at the DC input side of string inverters using MC4 connectors that are in vendor scope of supply for both ends. (2) For AC side connection at string inverters and ACCB boxes, cable as per SLD, 1.1kV, Copper, XLPE, armoured as per IS: 7098 part-1, together with nickel plated brass double compression cable glands, cable lugs, SS304 bolts/ nuts/ plain and spring washers shall be in vendor scope of supply. Termination shall be carried out using appropriate tools and torque setting as per BHEL/DMW approval.

8.16 Supply and installation of LTPDB combiner boxes

(1) LTPDB, as per SLDs, shall be in vendor scope of supply and installation.

(2) LTPDB shall be 3-phase, 50Hz, 415VAC, 1.1kV system voltage, outdoor, with canopy, cubicle design, compartmentalized (Breaker/ control box/ CTPT chamber etc), floor mounted, free standing IP55, neoprene gasket for doors/ frame joints, CRCA sheets 2mm (main frame)/ 1.6mm (door)/ 3mm (removable gland plate bottom side), painting seven tank process, colour RAL 7032, MS base channel 75x40x6 min/ black painted, panel lifting hooks, Copper bus bars as per SLD, RYB colour coded heat-shrinkable sleeves for bus bars, DMW/DMC insulator supports, copper earth bus, accessible live parts shrouded with FRP/polycarbonate sheets, MCCBs as per SLD for I/c feeders, SPDs, 25mm min phase to phase clearance, LED indicators for RYB at o/g, Unidirectional Energy meter as per DISCOM/PSPCL requirements, and a digital MFM cl:0.5 with RS485 port at o/g, colour coded Cu-cable AC/DC wiring (1.5/2.5 mm2 as applicable), panel illumination lamp, space heater, thermostat etc. For the incoming and outgoing power cables, nickel plated brass double compression glands, copper cable lugs, SS304 plain/ spring washers shall be provided.

(3) Digital MFM shall be of 0.5 Cl accuracy

(4) Unidirectional Energy meter which shall be off approved make and type as per Punjab Discom (PSPCL) along with necessary CTs,PTs. If required as per DISCOM this shall be provided per site in separate enclosure suitable for sealing by DISCOM.

(5) The LTPDB shall have 3 output MCCBs for connecting to various load points at DMW building according to the evacuation plan. These shall be L&T/ABB/ Schneider reputed make.

(6) MCB: L&T/ C&S/ ABB/ Siemens/ Schneider or reputed equivalent subject to BHEL approval

(7) Indicator lamps shall be L&T/ C&S or reputed equivalent subject to BHEL approval

(8) IS/IEC standards and other general features shall be as per “LT switchgear panel” section of this specification.

(9) Vendor shall submit the detailed GA, SLD, BOM, MQP etc of LTPDBs for BHEL/DMW approval during detailed engineering.

(10) Spares shall be supplied as follows:

(a) MCB: 2 Nos 100A, 63A and 32 A, 4 nos. of 16 A.

(b) MCCB : 1 No each of 200A and 100A. 2 Nos each of 32 A and 16A.

(c) LED indicators: 3 Nos each type

(11) Vendor shall install the LTPDB panels near to Customer LT evacuation point.

(12) Termination of output cable from LTPDB to customer evacuation point along with required terminal cable lugs, bolts and conduit etc.

8.17	**Laying and termination of cables from ACCB box to LTPDB box** (1) Cables as per SLD, 1.1kV, Copper, XLPE, armoured as per IS: 7098 part-1 shall be in vendor scope of supply and installation: for laying between ACCB to LTPDB. (2) Nickel plated brass double compression cable glands, cable lugs, SS304 bolts/ nuts/ plain and spring washers shall be in vendor scope of supply. Termination shall be carried out using appropriate tools and torque setting as per BHEL/DMW approval. (3) These cables shall be routed using the same type of GI cable trays/ accessories/ hardware used for 1Cx4 cables up to the ground level outside the buildings.

8.18 Underground cable trenches and laying of cables from buildings to building if required.

Routing of cables from buildings to buildings is not envisaged. However, if required due to specific conditions, such power, control, communication cables routed from one building to another building through underground cable trench (direct burying) as per IS: 1255.

Typical trench details/dimensions are below only for tender purpose. During detailed engineering, cable trench layouts and cross section drawings as per IS: 1255 shall be submitted for BHEL/DMW approval.

(a) Total trench depth = 750 mm minimum

(b) Trench width = As per number of cables/ HDPE pipes

(c) Trench shall have layers one over the other as below (from bottom to top):

1. Bottom layer shall be sand of IS: 383 with 75mm minimum thick.
2. 3C power cables shall be laid over the sand layer.
3. Another layer of sand of 75 mm minimum thick.
4. Single layer of brick as protective cover
5. Layer of sand of IS:383 with 75mm minimum thick
6. All communication cables shall be laid within HDPE pipe
7. Layer of sand of IS:383 with 75mm minimum thick
8. Single layer of brick as protective cover
9. Trench shall, then, be filled with refill soil and compacted

Communication cables shall be routed through HDPE pipe of PE63 grade, pressure rating PN6, appropriate nominal diameter and as per IS: 4984 (1995). It shall be ensured that a max of 60% of inner space shall be occupied by the cables. Communication cables and HDPE pipe shall be in vendor scope of supply. Vendor shall submit GTP/ make/ part number of the HDPE pipe, accessories and tools for BHEL/DMW approval during detailed engineering. Bending radii for cables shall be as per IS: 1255.

At pathway/road/drain/trench crossings, cables shall be routed through GI pipe of appropriate size that shall be in vendor scope of supply and technical details / brand etc shall be submitted for BHEL/SMS approval. It shall be ensured that a maximum of 60% of inner space of GI pipe shall be occupied by cables.

Vendor shall take utmost care in laying the cables in order to prevent damages on outer sheath and inner insulation. In case cables found to be damaged/ cut after the laying in trenches, vendor shall remove the damaged portion and join the cut pieces using appropriate cable jointing kits that shall be in vendor scope of supply.

8.19	**Laying of cables from LTPDB to Customer LT point evacuation** (1) Cables as per SLD, 1.1kV, Copper, XLPE, armoured as per IS: 7098 part-1 shall be in vendor scope of supply and installation: for laying between LTPDB and customer LT point evacuation through existing cable trench as per IS: 1255. (2) Nickel plated brass double compression cable glands, Al cable lugs, SS304 bolts/ nuts/ plain and spring washers for above cable terminations shall be in vendor scope of supply. Termination shall be carried out using appropriate tools and torque setting as per BHEL/DMW approval. (3) Wherever spares breakers are available at Customer LT evacuation panel, termination shall be carried. However, few sites where spare breakers not available, LT busbar extension is required from customer LT panel to solar LTPDB and cable shall be terminated.
8.20	**Laying and termination of RS485 cables** Vendor shall supply and install RS485 cable, copper, 2Px0.5, twisted pair, screened, armoured in daisy chain loops (a) from data loggers to string inverters and (b) from MFM meters of LT Panels to data loggers, (c) from weather monitoring system to data loggers. All cable accessories such as glands, lugs, ties, ferrules, tags, trays etc shall be in vendor scope of supply.
8.21	**Supply and installation of lightning arrestors for roof-top** Vendor shall supply, install and commission ESE type lightning arrestors at the roof-tops. GA/GTP of LA, GI 40x 4 down conductors and suitable mounting arrangement for LA, suitable routing arrangement for down conductors, earth electrode/ chamber provisions shall be submitted for BHEL/DMW approval during detailed engineering. All items in vendor scope of supply and installation. **General points:** (a) All items related to earthing viz electrodes, GI flats, hardware etc in vendor scope of supply. (b) GI bolts, nuts, plain washers shall be used. Spring washers shall be zinc/epoxy coated. (c) Wherever applicable, welding for GI flats shall be carried out using electric arc welding. Both the flats shall be overlapped for the full width where they are in perpendicular direction in same plane. Where the connection is along same line, both flats shall be overlapped for a minimum of 50mm. L-bend with weld length of 50mm minimum shall be adopted wherever overlap length to be ensured. (d) Resistance of welded joint shall not be more than that of GI flat. (e) Welds shall be treated with red oxide for rust protection and then coated with bitumen compound for corrosion protection. (f) While laying earthing electrodes, adding/mixing of chemical compound and water around the electrode in the dug hole shall be as per instructions of OEM. Vendor shall ensure visit of OEM engineer to site at the time of installation for proper guidance/ supervision. (g) Other applicable standards: - IS: 2629: Recommended practice for hot dip galvanizing of iron and steel - - IS: 2633: Method for testing uniformity of coating on zinc coated articles

	- IS: 6745: Methods for determination of mass of zinc coating on zinc coated iron and steel articles. - IS: 513: Cold rolled low carbon steel sheets and strips - IS: 3063: Fasteners single coil rectangular section spring washers In compliance to Rule 11 and 61 of Indian Electricity Rules, 1956 (as amended up to date), all non-current carrying metal parts shall be earthed with two separate and distinct earth continuity conductors to an efficient earth electrode.
8.22	Connectors to be provided for end terminations wherever required.

9.0 Supply and installation of other infrastructure / support systems

9.1	**Water washing system for SPV modules (Module cleaning system)** PROVISION OF WATER PUMP & REQUIRED PIPELINES – Bidder must provide at least one water pump along with required pipelines on each shed structure/building on which solar system is to be set up for making the provision of water availability at the roof top for the periodic cleaning of the Solar Panels. The provision of the pipeline and tap points should be sufficient to ensure that all the Solar Panels can be covered from those points. Module cleaning to be done weekly once to get maximum output from the Solar panels as per rated capacity of Solar Power Plant during warranty period/defect liability period/period of maintenance of 05 (five) years from DOC. 1) Vendor shall supply, install and commission permanent arrangement for module washing at the roof-top taking into account site conditions. 2) Water source for cleaning at site. 3) The system shall essentially include the following minimum components: a) Surface pump of appropriate size/ rating with starter shall be installed at respective buildings so as to pump water to roof tops. Suitable RCC civil pedestal and Canopy with frame shall be constructed for this arrangement. Arangement shall have necessary door/lock provision, steel sections/ steel sheets to withstand wind load etc, corrosion protection painting, fasteners etc. Vendor shall submit drawings for BHEL/DMW approval during detailed engineering. b) Vendor shall employ armoured electrical cables of suitable size/rating for all electrical connections. Cables with cable accessories (glands/ lugs/ termination hardware etc) shall be in vendor scope of supply and installation. Cabling to the pumps shall be from

ACCB. Cables shall be laid/routed through GI cable trays. All cable terminations including the ones at ACCB panels shall be in vendor scope.

c) UPVC pipes as per relevant IS standards, heavy duty, 6 Kg/sqcm: pump suction/ header pipes (40NB minimum), Feeder pipes (25NB minimum).

d) UPVC elbows, Tees, bends, couplers as applicable, as per relevant IS standards, for jointing and leak-proof pressurized pipe fittings.

e) UPVC raiser pipes with ball valves (25NB minimum, metal body, IS marked) and reducer nozzles for fitting hose pipes, at every delivery point. Every raiser pipe shall be fixed on the roof using concrete (PCC) pedestal construction.

f) Delivery points shall be made available as per solar array layout and space provisions at roof-top. Accordingly, number of delivery points shall be provided for cleaning of the entire solar array.

g) Air release valve fittings (metal body, IS marked) for header pipes at suitable locations.

h) Air release valve fittings (metal body, IS marked) for feeder pipes at suitable locations.

i) Control gate valve for header pipes; for maintenance (IS marked) at suitable locations.

j) Control gate valve for feeder pipes; for maintenance (IS marked) at suitable locations.

k) Non-returnable valves (NRV) shall be provided wherever applicable.

l) Hose pipes, heavy duty 15NB minimum

m) All necessary hardware items such as GI clamps/ screws/ bolts/ nuts/ plain washers/ spring washers etc wherever applicable.

(4) Any other items as required to complete the technical/ operational requirements of module washing system.

(5) Vendor shall design and submit the piping and instrumentation diagram (P&ID) of water washing arrangement including the physical sequence of branches, reducers, valves, pressure gauge, delivery points and location of pumps and water storage tanks for BHEL/DMW approval during detailed engineering. The diagram shall show locations of water source, pipelines, valves, delivery points etc as superimposed on the solar array layout, Bill of materials (item-wise description, type / rating, make, model number / part number, quantity) of water washing arrangement with necessary calculations of water flow / pressure / discharge etc for BHEL/DMW approval during detailed engineering.

All necessary labour, machinery, tools, instruments shall be in vendor scope.

9.2	**Fire fighting systems: Fire extinguishers and sand buckets** **FIRE EXTINGUISHERS:** The firefighting system for the proposed power plant for fire protection shall be consisting of: a) Portable fire extinguishers b) The installation of Fire Extinguishers should confirm to TAC regulations and BIS standards. Vendor shall provide fire extinguishers/ sand buckets as follows for fighting fire of oils, solvents, gases, paints, varnishes, electrical wiring, live machinery fires and flammable liquid/ gas as per recommendation by relevant fire safety authority and as per relevant standards IS: 2171 and IS: 10658 marked. Make shall be Safex/ Ceasefire/ Vintex/ Unicare fire safety or any other reputed equivalent subject to BHEL/DMW approval. ▪ DCP type (ABC) 9Kg designed/tested IS 15683/ IS: 13849 with safety release valve, NRV and CE approved valve. Dry powder IS 14609 with standard accessories. ▪ CO2 type Hand 9 Kg with wheel. Designed/tested IS 2878 complete with hose, screw valve, CO2 gas IS 1522, cylinder IS 7285, valve IS 3224. Tested at 250 Kgf/cm2. Quantity shall be as per vendor scope of supply (deliverables) in this specification.
9.3	**Identification marking of cables using cable tags** 1. Cable tags shall be provided at both ends of the cables: at SPV modules, string Inverters, data loggers, ACCB boxes, LTPDB panels and so on. 2. Cable tag shall be of rectangular shape. 3. Cable tag shall be of 2mm thick aluminium with number punched (embossed) on it and securely attached to the cable by not less than two turns of 20 SWG GI wire conforming to IS:280. 4. Reference shall be made to "**Cable installation methodology**" of this specification. Vendor shall submit the technical details of cable tags, ID numbering scheme for BHEL/ DMW approval during detailed engineering.
9.4	**Cable route markers** Cable route markers and joint markers for underground cables shall be provided along the route of the cables as per section "**Cable installation methodology**" of this specification.

9.5	**Electrical insulation mat** (1) Vendor shall supply electrical insulating mats as follows: (a) Reputed make as shall be approved by BHEL/ DMW (b) As per IS: 15652:2006 (c) Class B (d) Thickness 2.5 mm minimum (e) Size = 2m x 1m minimum, exact size shall be as approved by BHEL/DMW during detailed engineering. (f) Colour: to be approved by BHEL/DMW (g) Marking of IS standard on the mat (2) Test certificate shall be provided by vendor (3) Quantity shall be as per vendor scope (deliverables) list in this specification.

10.0 Pre-commissioning inspections/checks/tests on AC side, coordination/liaison with state / central departments/ CEIG etc for necessary approvals/clearances for commissioning, synchronization with grid/ plant commissioning:

Bidder shall prepare required drawings for the systems being installed at DMW along with details of the existing Power system at DMW for submission to DISCOM/CEIG for obtaining preliminary approvals prior to start of works and subsequently before taking up commissioning.

10.1	**Pre-commissioning inspections / checks / tests on DC side** Vendor shall carry out following minimum pre-commissioning checks: (1) Verification of firmness of SPV module interconnections (MC4) (2) Verification of firmness of DC cable terminations at string inverters using torque wrench (for the specified torque values) (3) Verification of firmness of RS485 cable terminations (4) Verification of firmness of all earthing connections (5) Cable megger/ continuity check for all DC power cables (6) Measurement of open circuit voltage of individual strings (7) Measurement of earth resistance at individual earth pits of solar array: (a) as disconnected from earth mat grid and also, (b) as connected to earth mat grid (8) Submission of test reports for BHEL/DMW approval
10.2	**Pre-commissioning inspections/checks/tests on AC side, coordination/liaison with state / central departments/ CEIG etc for necessary approvals/clearances for commissioning, synchronization with grid/ plant commissioning:** Pre-commissioning inspections / checks / tests and coordination / liaison activities with state / central departments / DISCOM/ CEIG etc for necessary approvals / clearances for commissioning, synchronization with grid and post-commissioning operation of the plant. (Clearances shall include obtaining prior approvals for all applicable drawings/ documents etc from concerned state / central departments / DISCOM/ CEIG etc.)

	A	Basic checks	
		A1	Tightness checks:
			1) Terminations of AC power cables at string inverters, data loggers, ACCB box, LTPDB panels. 2) Terminations of Control/ Instrumentation/ Data/ Communication cables wherever applicable. 3) Terminations of earthing at all electrical equipments/ panels. 4) Terminations of earth chambers of vendor scope
		A2	Electrical continuity checks
		A3	Megger (1kV) checks for all 1.1kV grade cables
		A4	AC/DC supply checks at TBs of all electrical panels/ DBs.

	B	Pre-commissioning electrical tests:	

	B1	String inverters
		1) DC side open circuit voltage 2) Vendor to provide technician support to service engineer of string inverters for all other pre-commissioning tests as per OEM checklist
	B2	Earth resistance measurements for all chambers of vendor scope
		1) With electrode connected to grid 2) Without connecting electrode to grid
C	Testing agency	
		Credentials of testing agency shall be submitted to BHEL for approval prior to awarding of work.
D	Coordination and Liaison activities to be carried out by vendor:	
		1) Liaison responsibility for getting the above approvals rests with vendor. 2) Following are the areas of approval, as applicable, for the SPV-side portions including solar array and up to 1.1kV side connection point. (a) Schemes/ layouts/ calculations such as solar array layout, lighting arrestor layout, module cleaning system, cable trench layout, fire alarm system etc. (b) GTP/ datasheets/ GA drawings/ Bill of materials, MQP etc of supply items. (c) Factory test reports of supply items including BHEL-supplied items. (d) Interaction with supervising/ inspection agency such as MRT departments, Transco, CEIG, CEA etc, as applicable, for applying to them/ inviting them for supervision/ inspection at site. (e) Interaction/ coordination with customer (DMW) in the above process as and when required. (f) All necessary testing kits/ instruments shall be arranged as per the requirements of inspection agency. Basic instruments such as digital multimeter, 5kV digital megger with PI feature, earth resistance meter, clamp meters etc shall be organized at site at the time of inspection. Competent electrical technician shall also be made available at the site. (g) Subsequent to site inspection by the concerned agency, vendor shall support the upstream 1.1kV evacuation line/ contractor in following-up with them to obtain their clearance for line charging/ grid synchronization. (h) Vendor shall implement all the observations of CEIG related to SPV-side portion including solar array and up to 1.1kV connection point to metering panel at plant end.
E	Commissioning of power plant	
		1) Vendor shall be cable of extempore trouble-shooting in case of any technical problems encountered with roof-top as well as 1.1kV installations.

				2) Vendor shall organize all necessary tools/ measuring instruments required to operate the various electrical equipments at the time of commissioning: Digital megger 1 KV with PI feature, Earth resistance tester, Phase sequence meter, Clamp meters etc, discharge rods, PPE safety gadgets (helmets, shoes etc).	

11.0 General conditions applicable during supply, installation and commissioning phase

11.1	As already mentioned in previous clauses, vendor shall organize construction power supply on their own. Accordingly, DG sets of suitable capacity shall be deployed by the vendor for construction works.
11.2	Similarly, water required for construction works is available at site. This can be utilised for civil work.
11.3	All machinery such as cranes, hydra, JCBs, forklifts, transport trucks, trolleys etc necessary for movement and installation of materials / panels / equipment etc shall be organized by the vendor.
11.4	All necessary tools and tackles such as crimping tool (including heavy duty tools for crimping copper/ aluminium cables up to 50 sq-mm), screw driver set, power screw drivers, cutting pliers, nose pliers, spanner sets, adjustable spanners, hole-saw cutter set, bending tools, torque wrenches, hack saw blades, pipe wrenches, flat / round files, drilling machines, welding machines, concrete mixers, steel bar bending tools / templates/ shuttering materials for RCC works, spade, shovel, hammer etc shall be organized by the vendor.
11.5	All necessary measuring instruments such as measuring tapes, digital multimeters, vernier calipers, electrical testers, digital meggers (1kV), lamp load testers for solar array string measurements, earth resistance meters, weighing machines, water level indicators etc shall be organized by the vendor.
11.6	In case project is not completed as per BHEL scope due to reasons arising out of materials from BHEL end/vendor's end, contractor has to complete the job at later stage without any extra charges. No overrun charges shall be paid in case of extension of project schedules
11.7	Vendor shall make their own arrangements for necessary food, drinking water and accommodation for their labour and employees posted at the site. Similarly, food and drinking water required at the site, during the construction operations, shall also be in scope of vendor.
11.8	Vendor shall organize all necessary steps to meet statutory requirements such as labour license, PF, ESI etc and also ensure compliance with relevant acts such as minimum wages act, income tax act, employee insurance act etc for their labour deployed at site.

11.9	Vendor shall maintain updated labour register, with name, age, qualification, salary, attendance details etc at the site.
11.10	Vendor shall use danger boards, wherever required, to ensure safety of the persons during the work at site.
11.11	Vendor shall adhere to all necessary safety norms such as use of helmet, safety harness, goggles, hand gloves, gumboots, aprons etc. It is the ultimate responsibility of the vendor in all respect to prevent accidents at the site and safeguard their labour from accidents.
11.12	Vendor shall, at the completion of every work, clear off the debris, which resulted out of the work. In case of excavation work such as earth mat trench, cable trench etc, vendor shall finish the land neatly with necessary levelling, rolling etc.

11.13	Vendor shall carry out the work without causing inconvenience to other contract groups at the site. In case of conflicts with other groups, vendor shall ensure that the matter is resolved at once amicably so that the progress of work is not affected.
11.14	Any damages on the building, structures etc attributable to the acts of labour / employees of vendor shall be rectified and made good by the vendor at their own cost.
11.15	No child labour shall be employed for execution of the present contract.
11.16	Any miscellaneous materials, which are found essential for technical completion of the contract but not mentioned explicitly in this specification, shall be deemed to be included in the specification. Accordingly, such materials shall be included by the vendor as part of the offer.
11.17	Special instruction for earthing: In compliance with Rule 33 and 61 of Indian Electricity Rules, 1956 (as amended up to date), all non-current carrying metal parts shall be earthed with two separate and distinct earth continuity conductors to an efficient earth electrode. Accordingly, all cases such as cable support structures, cable ladders, cable trays etc as applicable shall be earthed.
11.18	BHEL/DMW shall witness routine/ acceptance/ type tests performed at manufacturer works for the items supplied by vendor. Vendor shall accordingly provide inspection call to BHEL with submission of quality assurance plan in advance. For the items bought out from dealers, test certificates, as per relevant IS / IEC standards, as issued by manufacturer shall be submitted to BHEL. However, prior approval shall be obtained from BHEL/DMW for procurement of the item from dealers.

11.19	Field Quality Plan / Quality control system Vendor shall set up a field quality control laboratory with full set up to facilitate testing of all construction materials in accordance with FQP (Field quality control plan) as approved by BHEL/DMW. Vendor shall deploy a well experienced quality control engineer to monitor all QC activities at site as per approved FQP. Specifically with reference to civil works, vendor shall submit all concrete mix designs and bituminous mix designs for BHEL/DMW approval before starting of the work. All the third party testing should be conducted in NABL approved laboratories only. Vendor shall submit the FQP for the civil construction works before starting of the works for approval of BHEL/DMW.
11.20	Any deviations shall be discussed with BHEL/DMW site engineers and implementation shall be taken up only after approval from BHEL /DMW.
11.21	Vendor shall submit periodic status report, on daily as well as weekly consolidated basis, to BHEL on the progress of the contract.
11.22	Vendor shall, as and when required by BHEL/DMW, participate in the review meetings conducted by BHEL/DMW at project site, BHEL-EDN (Bangalore), BHEL-Corporate office (New Delhi), DMW office (PATIALA) etc.
11.23	General Guidelines a) Any civil or electrical work which is not mentioned or included in this tender document but necessary for functional requirements of the plant shall be carried out by vendor.
	b) Vendor shall prepare all designs / drawings based on the specifications given in the tender and in light of relevant BIS/IS/ equivalent standard. c) Vendor shall provide type test reports and datasheet/ GTP for all equipments covered under vendor scope of supply. d) All work shall be carried out in accordance with the latest edition of the Indian Electricity Act and rules formed thereunder and as amended from time to time.
11.24	Vendor has to pay the plant electricity consumption charges, internet & telephone charges etc during the O&M period.
11.25	Vendor shall submit periodic status report, on daily as well as weekly consolidated basis, to BHEL on the progress of the contract.

12.0 Operations and Maintenance

12.1	**Date of commencement of operations and maintenance** Zero date for O&M shall be the actual date on which the power plant is commissioned with synchronization of string inverters to grid / export of power and its acceptance after "Prove out" procedure to DMW/IROAF. O&M shall be for 5 years with scope covering both the solar side up to the LT evacuation.
12.2	**O&M personnel** 1. Vendor shall deploy following minimum personnel: (a) Technical / administrative / office personnel • One experienced technical-cum-administrative in-charge having diploma in electrical/ electronic engineering and experience with overall responsibility for complete plant operations. The in-charge shall have competence to deftly handle technical and operational / crisis problems. • Two working level staff with ITI / diploma level qualifications in engineering with competence for operating electrical/ electronic/ mechanical equipment, taking measurements, data logging / maintaining registers, preparation of reports in computer. • In addition to the above, separate set of persons shall be deployed for water cleaning of SPV modules on daily basis. Number of persons shall be decided considering maximum 10 days per cleaning cycle. 2. Vendor shall provide uniforms for the O&M staff. 3. Similarly, O&M personnel shall be provided with raincoats, toolsets, earthing rods, safety gloves, safety harness, safety goggles, gumboots, helmets and all other personal protective equipment (PPE) that will be relevant to ensure human safety. 4. Names, qualification, work responsibility of personnel shall be listed on a display board at an appropriate location as suggested by the end customer. 5. Attendance registers shall be maintained for all the staff, workmen.

	6. Vendor shall ensure statutory requirements such as ESI, PF, labour license, BOCW etc as applicable for their O&M personnel posted at site. 7. BHEL/DMW shall have right to disallow any O&M employee, if found unfit to perform. BHEL instructions issued in writing shall be binding on vendor who shall replace the person. 8. O&M personnel at site shall conform to general regulations in force at site and to any special instructions from BHEL/DMW administration. 9. O&M personnel at site shall be deemed to be aware of damages and risks incidental to conditions of rooftop place & works from time to time and BHEL/DMW shall not be responsible for any injury to personnel arising there from. 10. Training to O&M personnel It is the absolute responsibility of vendor to ensure imparting of necessary training to their O&M personnel to get them acquainted with the operations of various electrical and mechanical equipment of the power plant. For this purpose, vendor shall identify the O&M personnel well in advance and involve them during installation and commissioning stages so that they become well versed with various functional aspects of the power plant. 11. Availability of O&M personnel at power plant (a) Vendor shall ensure that operating staff are present in the power plant during 6:30 AM – 6:30 PM every day. (staggered shift to cover duty time) (b) Vendor shall ensure that certain minimum operating staff are present at the power plant even on festivals, public holidays and any other unique occasions so that the plant is run under competent supervision on all days. 12. O&M personnel shall, strictly, not use any part of the power plant for their personal / residential purposes. Their presence at the plant shall, strictly, be meant only for the purpose of operation and maintenance of plant.
12.3	O&M operations – **daily basis** (1) Water cleaning of SPV modules with one cycle of cleaning of all the modules of the power plant not exceeding 7 days. In order to fulfil this requirement, vendor shall organize all necessary resources such as (a) manpower (number of persons for the cleaning work), (b) number of simultaneously-operating teams, (c) machinery/ materials/ accessories such as pressurised water pumps, hose pipes, nozzles etc. Whenever the integral module washing system of the plant is not operational due to reasons of any kind, vendor shall make alternate arrangements such as water tankers, water delivery mechanisms (pumps,

	hoses, nozzles and other fittings), operating personnel etc required to fulfil the above specified cleaning of max 7 days/cycle. (2) Logging of DC, AC, and grid parameters (current, voltage, power, energy etc) at string inverters/ LTPDB/ metering panels, equipment tripping/ breakdown, grid outage etc as per BHEL formats.

12.4	O&M activities – **monthly basis** (1) Inspection of fire extinguishers (weight, pressure indication, physical status etc) followed by refilling actions, if necessary, based on indications. Report to be submitted as per BHEL approved recording formats. (2) Earthing resistance measurements for solar array structures, various equipment and lightning arrestors: measured values shall be recorded in registers and reported to BHEL as per BHEL approved recording formats. (3) Submission of values / status of plant parameters and events for the corresponding month, as below, as per BHEL approved formats: a. Daily values of solar array at string inverters, ACCB, LTPDB panel levels b. Daily values of weather parameters (solar energy, wind speed, ambient temperature) c. Events (with date, time) of faults / tripping / breakdown of equipment d. Events (with date, time) of grid outage e. Events (with date, time) of equipment damages, accidents and thefts f. Activities of module cleaning (4) Monthly reports shall be submitted to BHEL for all the above data. (5) Energy generation / meter reading report to be prepared and submitted to the concerned state/central department. Signatures from BHEL/DMW representatives shall be obtained wherever required.
12.5	O&M activities - **quarterly basis** (1) Cleaning of string inverters, ACCB, LTPDB panels etc to remove accumulated dust. (2) Monitoring and status review, followed by rectification/ calibration/ replenishment/ replacement actions as necessary and applicable for following: (a) Spare items of all electrical equipment (b) First aid box items - medicines and accessories (c) Safety gadgets (d) Tool kits and measuring instruments (e) Pumps, starters

	(3) Submission of quarterly report on above activities to BHEL.
12.6	O&M activities – **yearly basis** (1) Painting of earthing chambers if required based on conditions of rusting. (2) Checking tightness of hardware in MMS structures and tightening wherever required. (3) Checking tightness of power cable terminations in SPV modules (MC4), string inverters, ACCB, LTPDB.
12.7	O&M activities - as and when required (contextual basis) (1) Monitoring and operation of plant electrical equipment as and when required: (a) ACB and MCCB on/off operations on LT side (b) String inverter operations: review/selection of settings, monitoring the DC/AC/ event/ fault status parameters (c) Maintaining SCADA/Data logger system (d) Water pumping operations

	(2) Removal of garbage from solar array field, sand buckets; logging in registers with signatures of operating persons and in-charge. (3) Coordinating and liasoning, on behalf of BHEL, and obtaining renewal of statutory licenses, clearances and approvals from state departments such as electricity boards, CEA/CEIG etc. (4) Repair and replacement of vendor-supplied items, by vendor, with urgent action plans and implementation, when the items are found non-working / damaged. The same shall be reported to BHEL within 12 hours from time of observation. (5) Reporting, on an immediate basis (within max 2 hours) of functional problems / damages in BHEL-supplied items to facilitate repair / replacement by BHEL. Further, vendor shall correspond / coordinate with respective equipment vendors / service centers, on behalf of BHEL, for getting the service engineers to the site. Later, coordinating with the service engineers during their visit to site, and assisting them in the trouble shooting process until the problem is resolved. Vendor shall report to BHEL (within max 2 hours) immediately after the problem is resolved. (6) Vendor shall keep updating the spares inventory at the site every time there is consumption of spare items towards replacement. In case of shortage of spares, the same shall be reported on an urgent basis (with max 2 hours) to BHEL. (7) Coordinating with sub-station upon grid failures, line problems etc and implementing the needful steps to restore the plant to normal operation. (8) Theft incidents: immediate reporting to BHEL, filing FIRs with police stations on behalf of BHEL, coordination for site inspection by insurance companies and clearance of insurance claims, logging of events (date, time) and maintaining records. (9) Accidents: immediate reporting to BHEL, coordinating with hospitals, logging of events (data, time) and maintaining records.

13.0 Documents to be submitted for BHEL/DMW approval during detailed engineering

13.1	BHEL/DMW approval shall be obtained for the following technical documents, which shall be submitted to BHEL in phased manner based on priority sequence of activities during detailed engineering (after receipt of purchase order from BHEL).
13.2	Name of vendor / make, model number / part number, specification / sizes / dimensions / drawings / datasheets shall be submitted for all the vendor supplied items.
13.3	GA / SLD / GTP / datasheets / schemes / layouts / BOM/ design calculations etc, as applicable, shall be submitted for the following: (1) MC4 connectors (2) All cables that are in vendor scope of supply (3) ACCB, LTPDB panels (4) Cable glands, cable lugs, cable ties, GI cable trays of all types (5) Routing layout for AC and DC cables and Control cables with locations of string inverters, data loggers, ACCB (6) Underground trenches: routing layout/ trench cross sections etc. (7) Concrete foundations for string inverters, ACCB boxes (8) Steel mounting structures for string inverters, ACCB boxes: GA, BoM etc. (9) Lightning arrestors system: foundations, layouts, GA, BOM etc.
	(10) Module cleaning system: design calculations, layouts, BOM, electrical circuit diagram, water circuit diagram, pump sizing calculation etc. (11) Earth grid for solar array: design calculations, layout, BoM, cross sections etc. (12) Earth chambers: GA/BoM, layout, cross section etc. (13) Fire extinguishers: GTP/datasheets etc.

	(14) Any other designs/ schemes/ layouts etc as applicable as per BHEL/DMW requirements during detailed engineering.
13.4	Manufacturing Quality Plans for all the vendor supplied items
13.5	Field quality plan for the field work: civil works, electrical works
13.6	Detailed activity-time chart for project implementation
13.7	Detailed manpower deployment schedule
13.8	Installation/ O&M manuals for MC4 connectors, chemical earthing electrodes, lightning arrestors , surface pumps, fire extinguishers etc.

FIRST ANGLE PROJECTION

ALL DIMENSIONS ARE IN mm

DRAWING NO. 3 679 02 00414

COPYRIGHT AND CONFIDENTIAL
The information on this document is the property of Bharat Heavy Electricals Limited.
It must not be used directly or indirectly in anyway detrimental to the interest of the Company

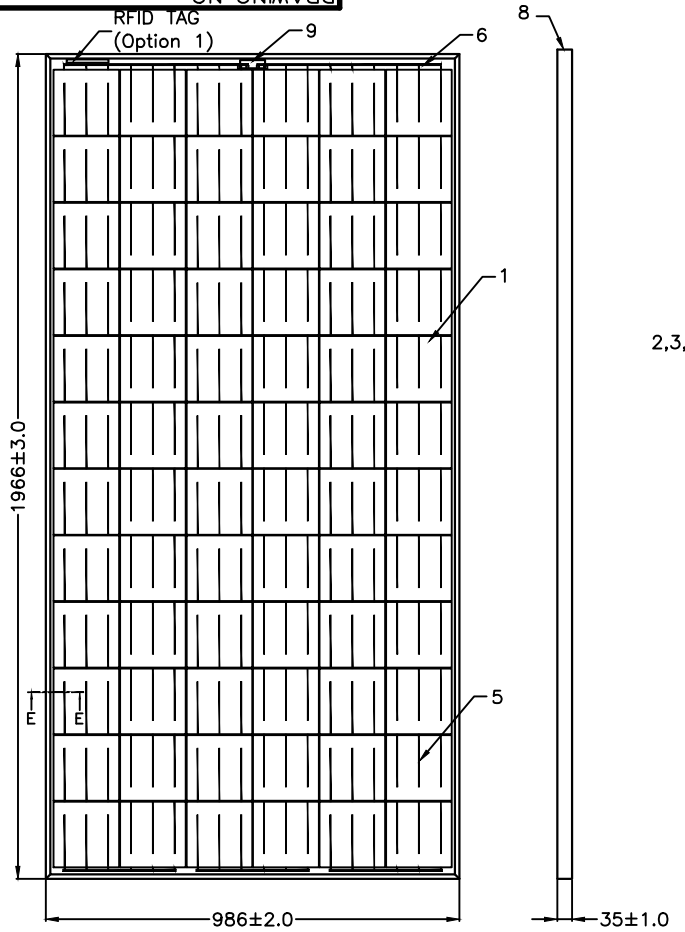

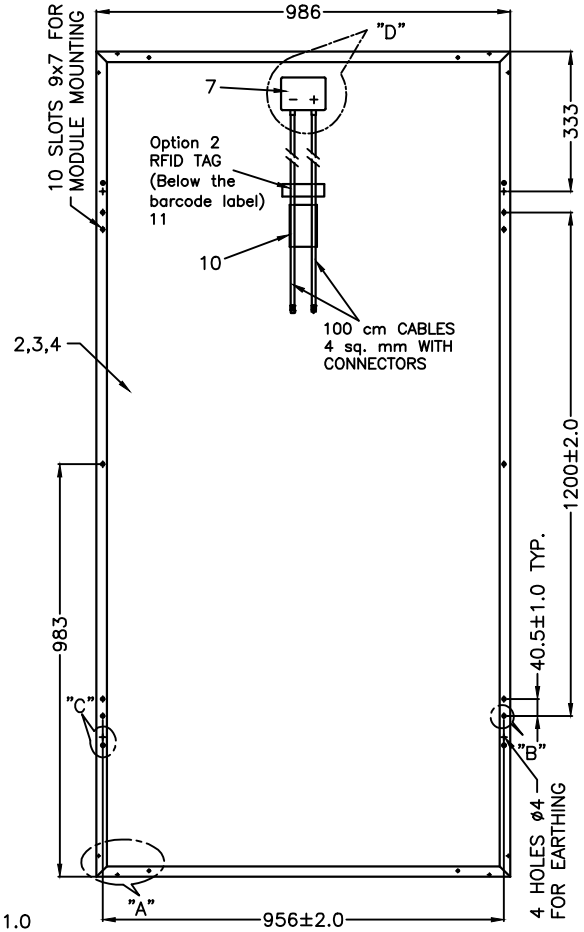

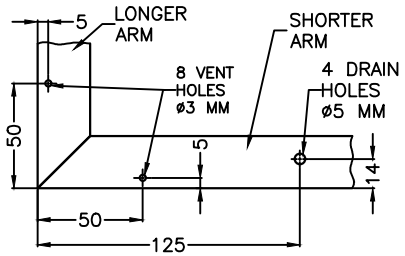

DETAIL – "A"

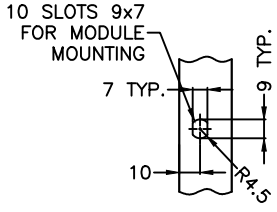

DETAIL – "B"

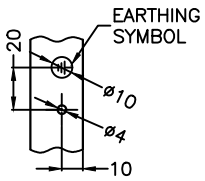

DETAIL – "C"

PART	DESCRIPTION
11	RFID TAG
10	MODULE RATING STICKER
9	PV MODULE SL. NO. STICKER
8	ANODISED ALUMINIUM EDGE FRAME
7	JUNCTION BOX WITH CABLES & CONNECTORS
6	BUS BAR
5	INTERCONNECTS
4	BACK SHEET
3	EVA SHEET
2	HIGH TRANSMISSION TEMPERED GLASS
1	72 Nos. OF 156 mm MULTI CRYSTALLINE SILICON SOLAR CELLS CONNECTED IN SERIES

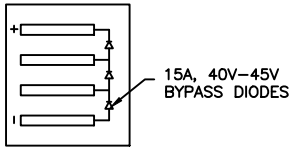

DETAIL "D"

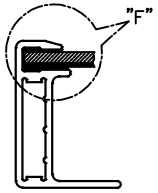

DETAIL – "E"

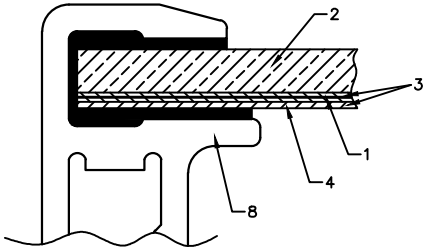

DETAIL – "F"

REV.	DATE	ALTERED / CHECKED / APPROVED

REV.	DATE	ALTERED / CHECKED / APPROVED

REV.	DATE	ALTERED / CHECKED / APPROVED
00		FIRST ISSUE

BHARAT HEAVY ELECTRICALS LIMITED.
ELECTRONICS DIVISION, BANGALORE

	NAME	SIGN.	DATE	No. OF VAR
DRN	SAN		030816	
CKD	JRS		030816	
APPD	SR		030816	

DEPT.	FOR UNSPECIFIED–TOLERANCES REFER ED 0230499	SCALE	WEIGHT(Kg)	REF. TO ASSY. DRG.	ITEM NO.	No. OF ITEM
SC&PV / CODE 439		1 : 10				

TITLE
PHOTOVOLTAIC MODULE–L24270P
156mm Multi Solar Cell (Corner Block Type)

DRAWING NO. 3 679 02 00414 REV. 00

SHEET NO. 01 NO. OF SHEETS 01

REF. DRG.NO.

SIGN & DATE

INVENTORY NO.

FORM No. A3–02

A3 SIZE

BUILDINGWISE ASSESSMENT OF SOLAR ARRAY ON ROOF TOPS AT DMW, PATIALA BASED ON SITE RE-SURVEY dt 27-04-2017

WORKSHOP ROOF INSTALLATIONS

Sl.No.	Name of WORKSHOPS identified and surveyed	Remarks/Configuration details	Length (m)	Width (m)	No. of sections	Area useable after resurvey (Sq.m)	KWp possible as per Detailed Engg	Tentative inverter configuration
1	LRS and LSS- C &H unit		28	7.5	34	7140	650	50kWX13 nos
2	SSS - C & H unit		20.5	7	9	1291.5	140	2X50kW+2X20kW
3	Bogie shop- C &H unit		20.5	7	19	2726.5	300	6X50kW
	TOTAL					**11158**	**1090**	

FLAT ROOF INSTALLATIONS

Sl.No.	Name of Flat roofed buildings and Annexe buldings identified and surveyed	Remarks	Approx Area useable (Sq.m)	Array kWp feasible by placing PV modules MMS of 5 nos, or lesser in possible shadow free areas		KWp based on approx. area worked out during survey	
4	Admin Building and IT building	Multiple AC ducting layouts, number of container rooms on the rooftop and uneven shape of the building will impact the effective area for solar PV panel installation.	4840		2650	310	5X50kW+1X25kW
5	MRS office Trees to be pruned to avoid shadow)	45 m X10 m	450	35		35	1X30kW
9	Coil shop and TMS Annex					40	2X20kW
10	HMS Annex	Split areas along the length of Annexe.				50	1X50kW
13	Dy CM(2) office and Bogie shop annex	Distributed on 3 nearby buildings				40	2X20kW
14	Dy CM(Depot) office and mech lab				540	40	2X20kW
17	Tool room annex and electronics lab					40	2X20kW
18	TTC annex and above class rooms	(13X3)X9= 360sq.m and south side roof			360	30	1X30kW
21	Workshop gate(trees to be cut to avoid shadow)	Time office (45mX8m) & garage (20mX9m)			540	30	1X30kW
22	Staff canteen (Trees to be cut to avoid shadow)	30mX35m			1050	80	1X50kW+1X30kW
25	TRS battery room	32mX18m			576	50	1X50kW
26	LMs Annex.(Northside)	50mX8m			350	30	1X20kW
27	PMS elect.lab(LMS southside)	60mX10m			600	40	2X20kW
29	CMS workshop	Flat roof			350	30	1X30kW
30	CMS workshop*(AC sheet to GI)	Sloping AC sheet to be converted to GI sheet**			530	50	1X50kW
31	NC Lathe AC plant				460	45	1X50kW
32	LRS annex. Roof-newly repaired (23mx7m)	Part of LRS system on Workshop roof			180	10	Part of LRS system
		Total					
	Total KWp possible on flat roof tops					**950**	
	Total of available estimated KWp	**Net of Workshop and Flat roofs**				**950**	
	Note:						
	1. By empolying higher rated module (greater than 310Wp), kWp of overall reqirement ie. 2000kWp shall be maintained.						
	2. Annex. Blocks of Phase-2 Buildings allowed by DMW for considering PV installation as per Civil Engg Dept opinion.However Phase-2 workshop roofs are not feasible for construction. 3. Skew of 35 to 42 degree to South is ignored to maximize mounting area.						

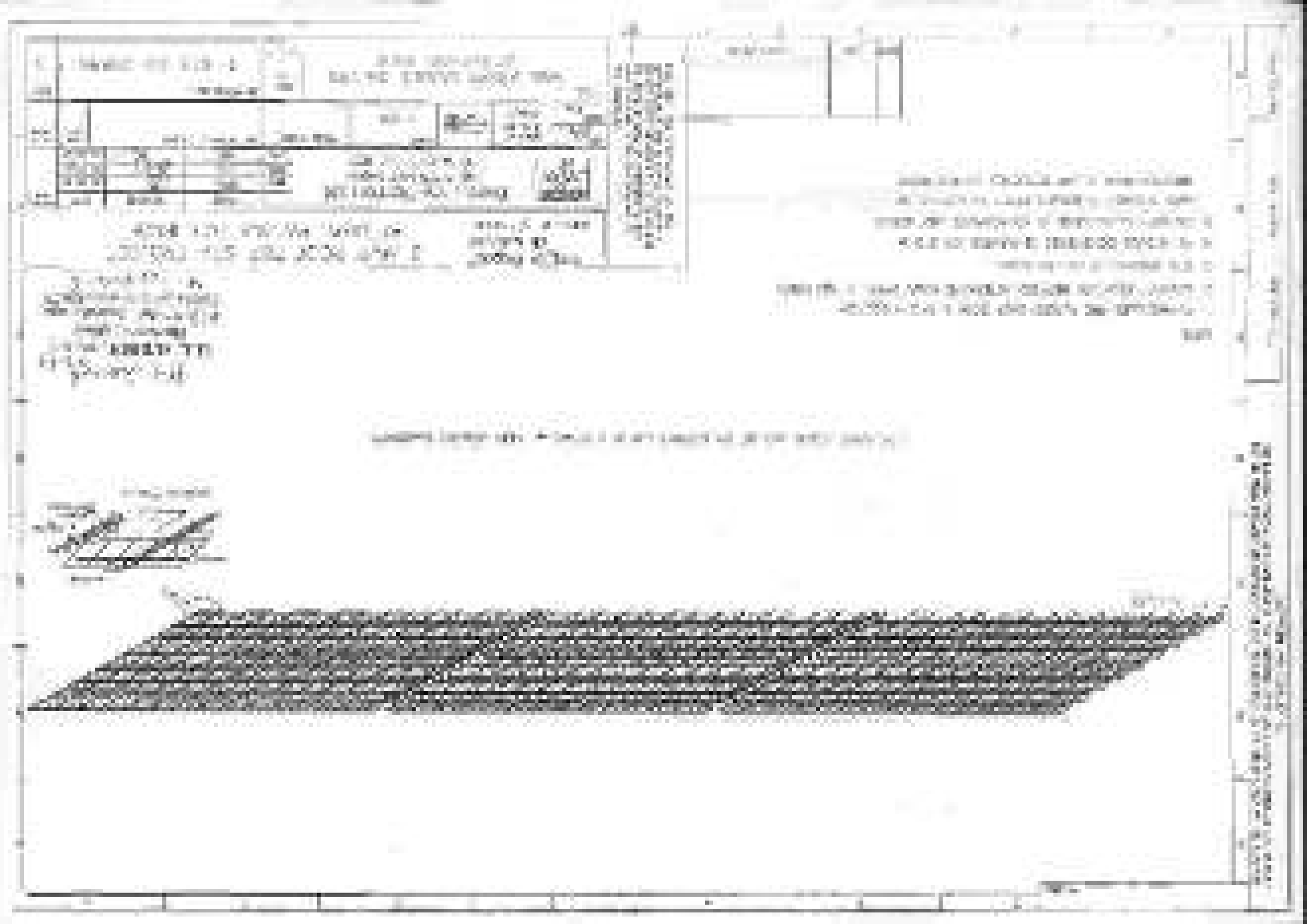

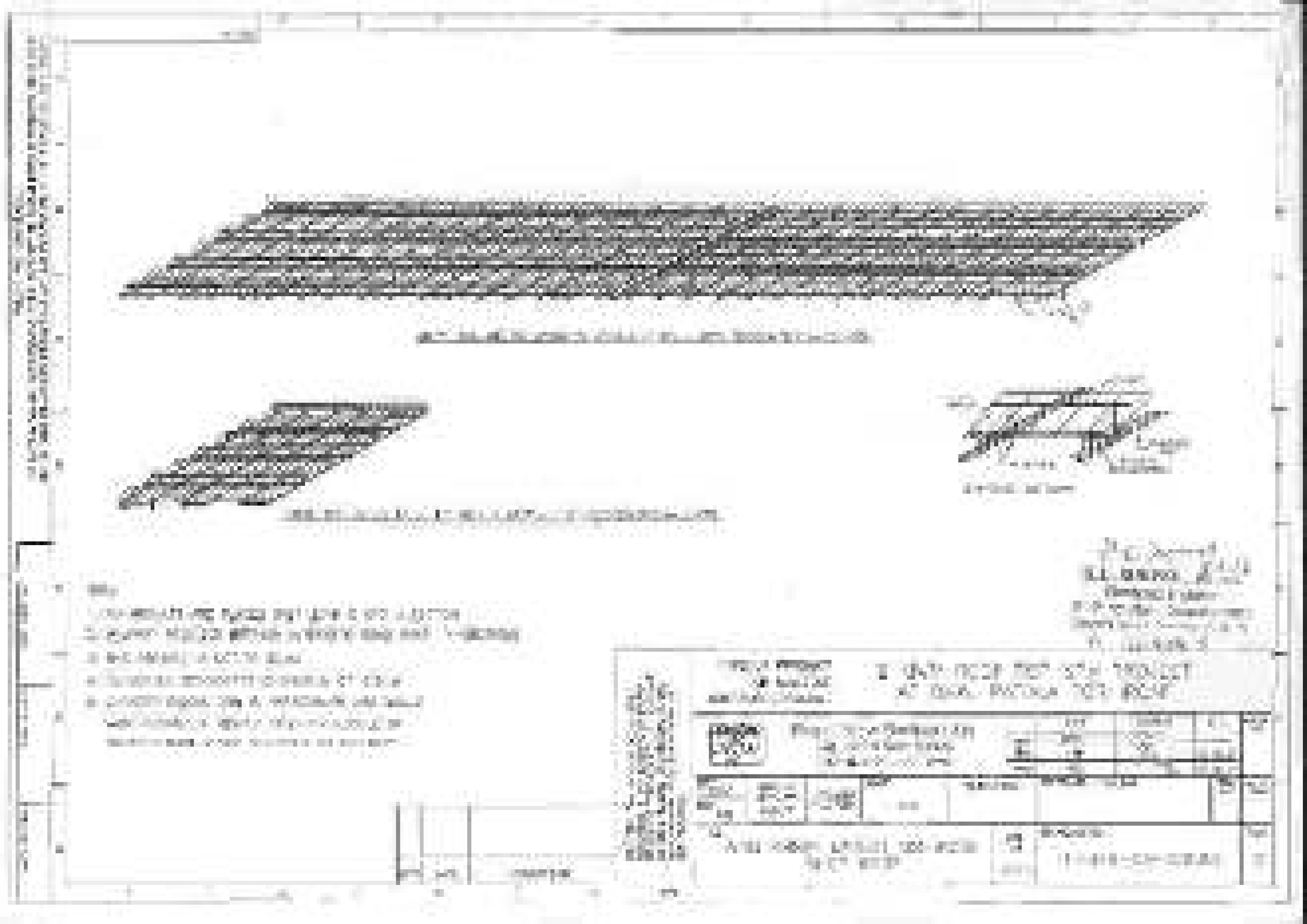

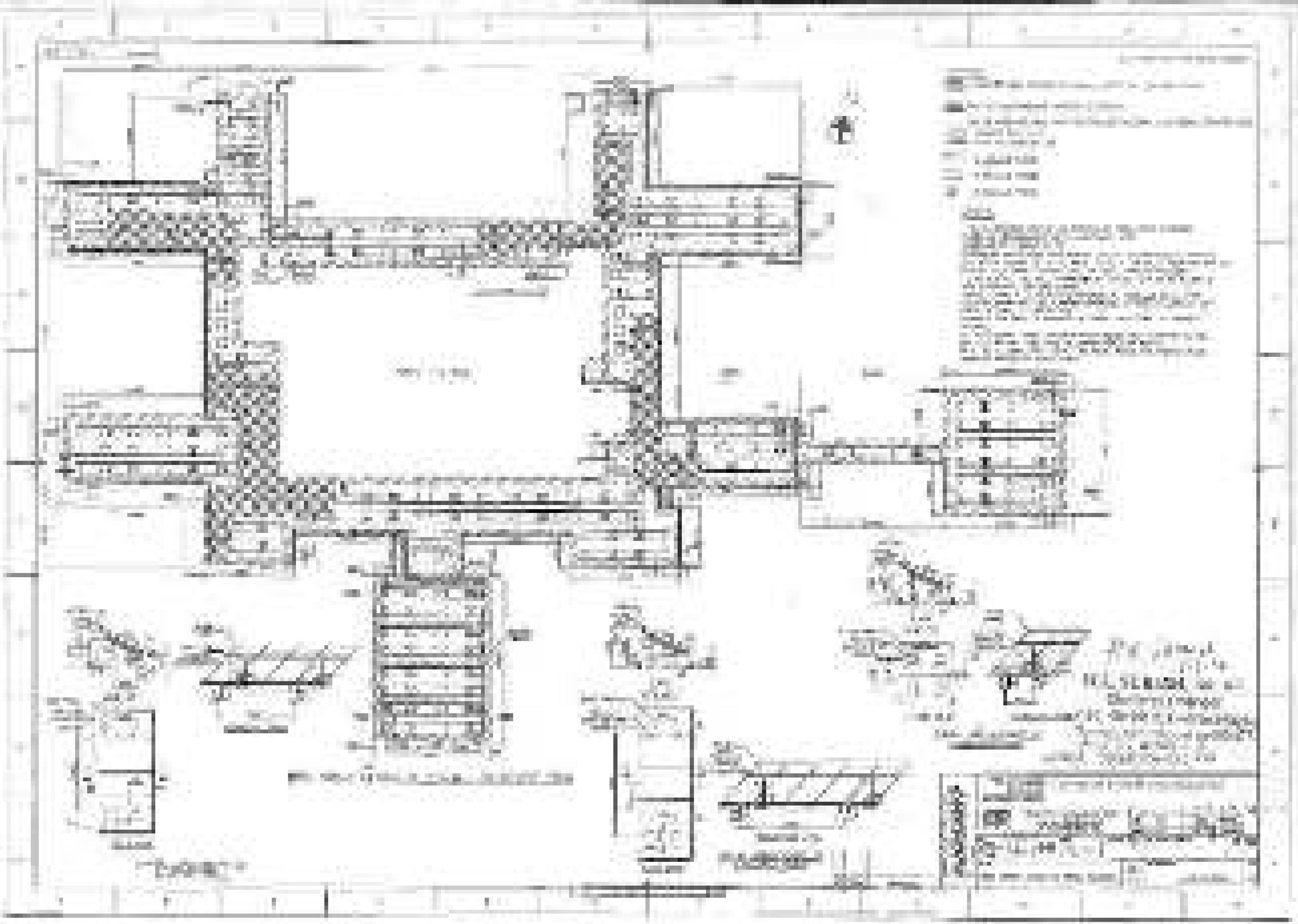

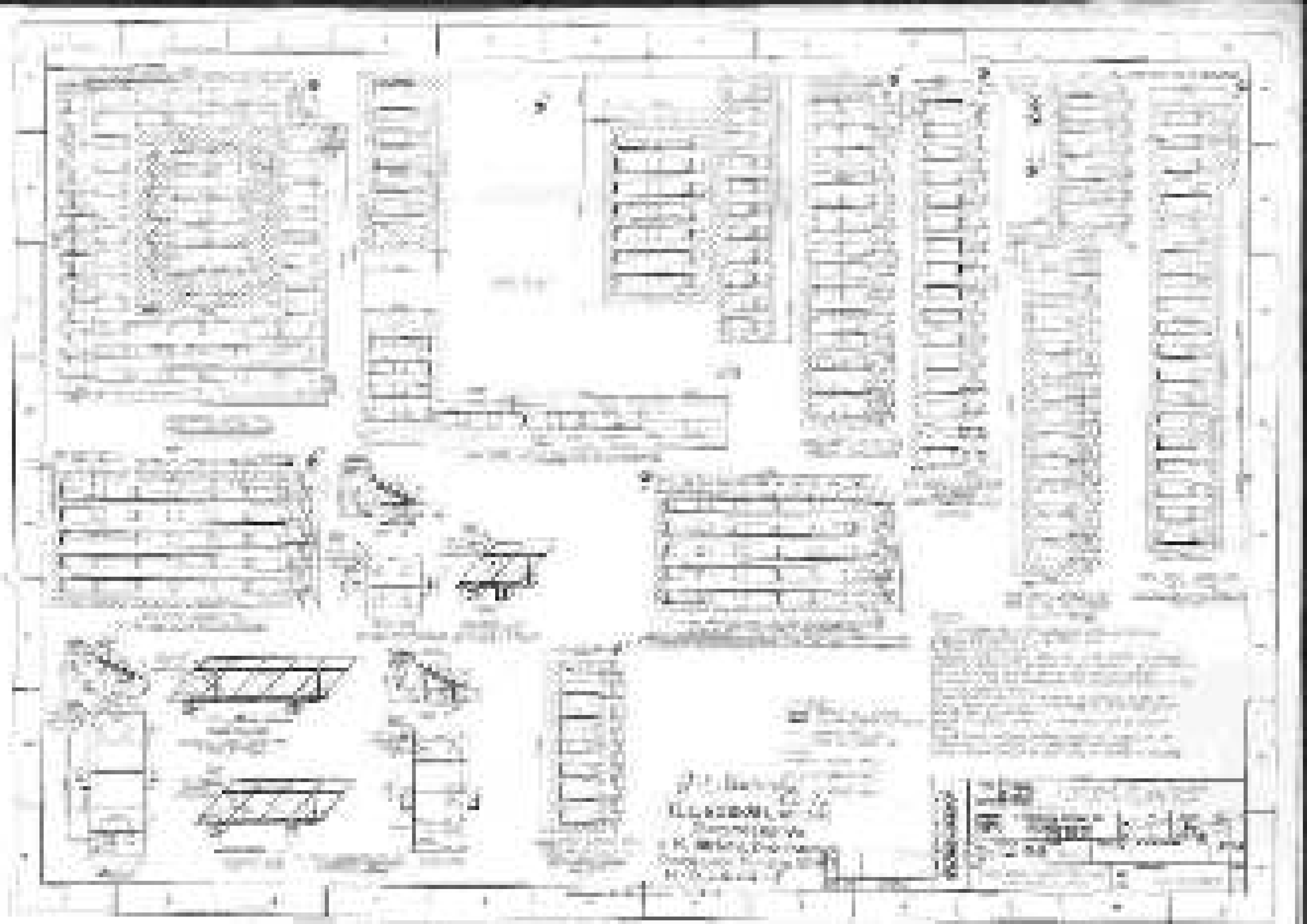

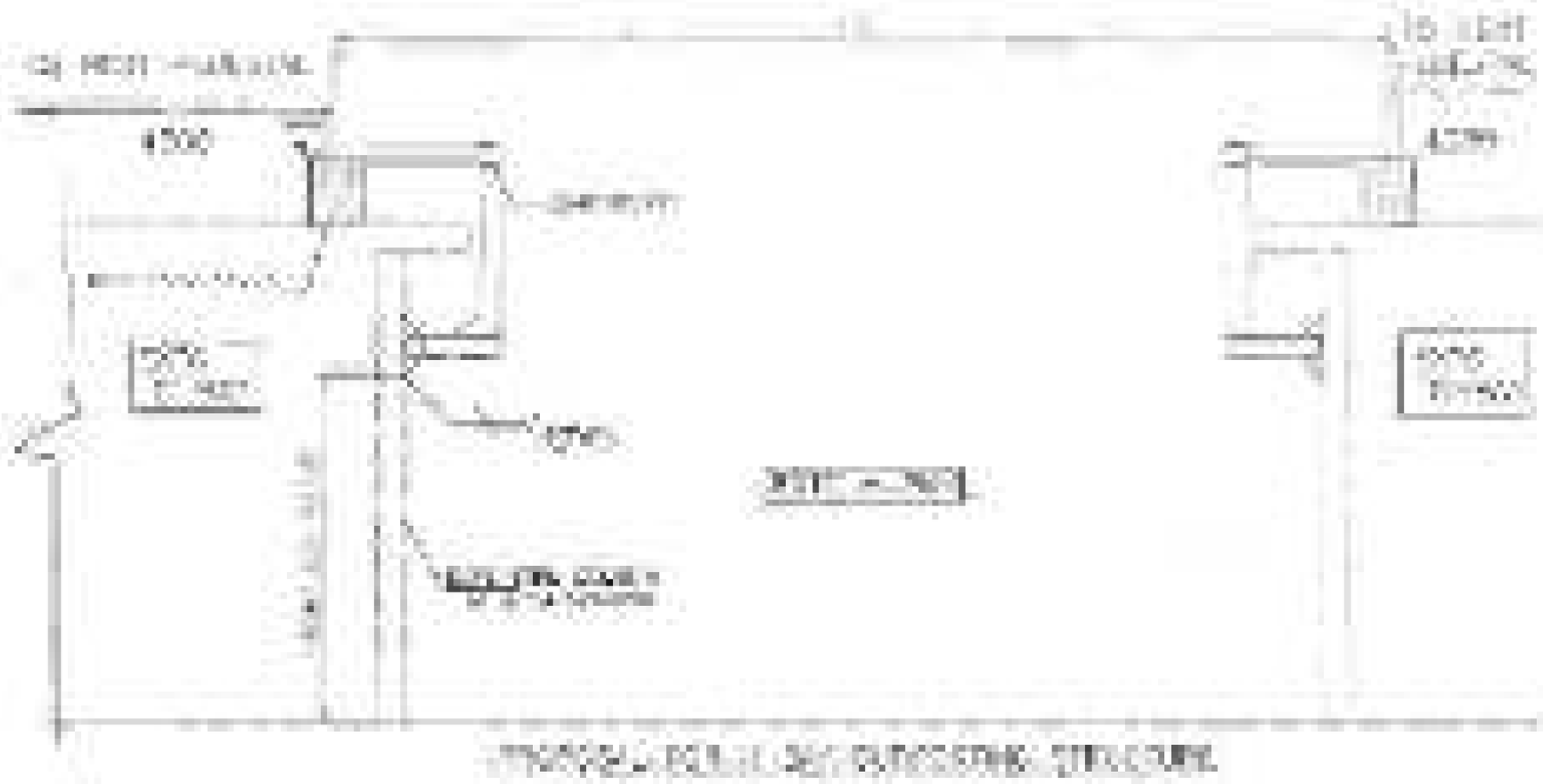

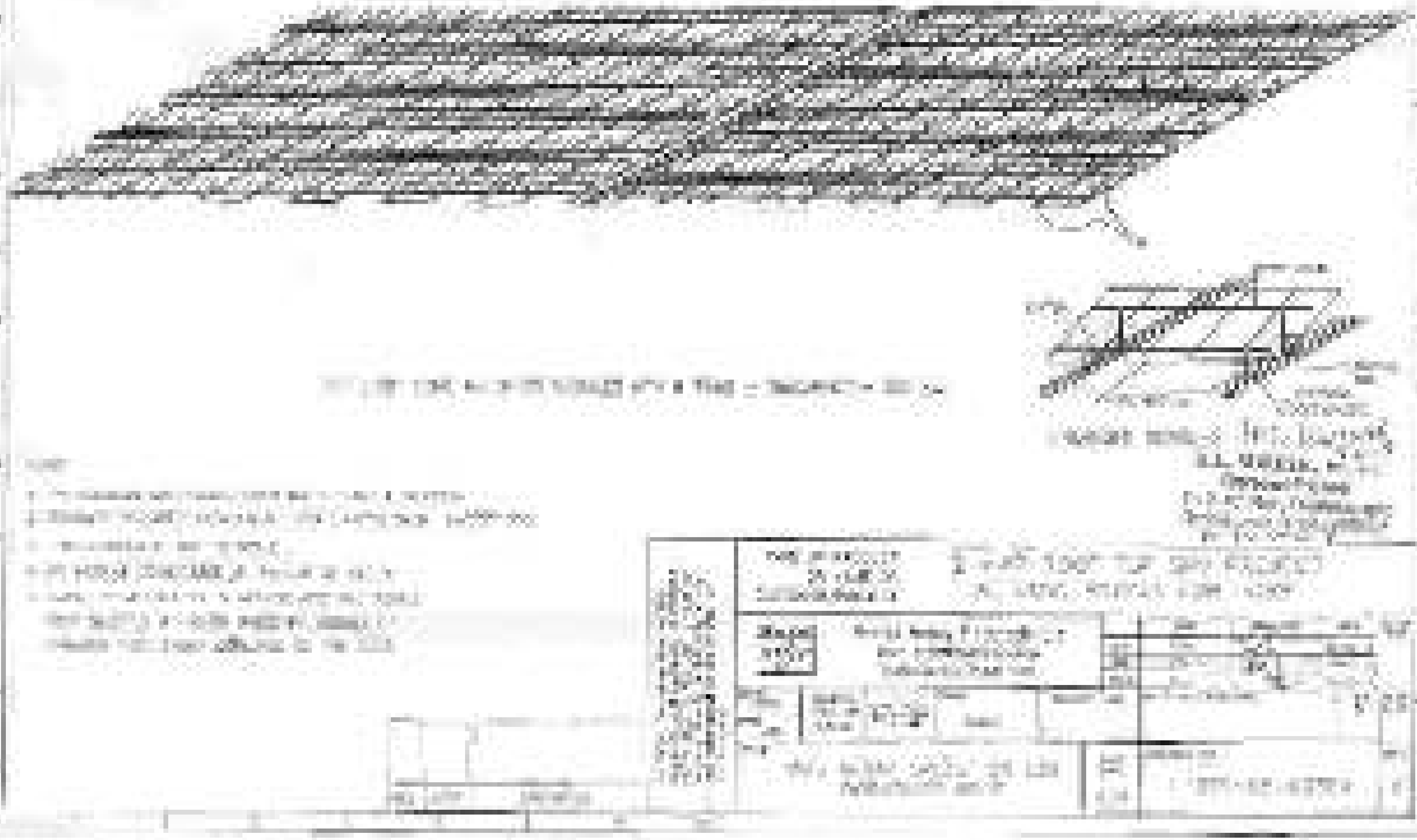

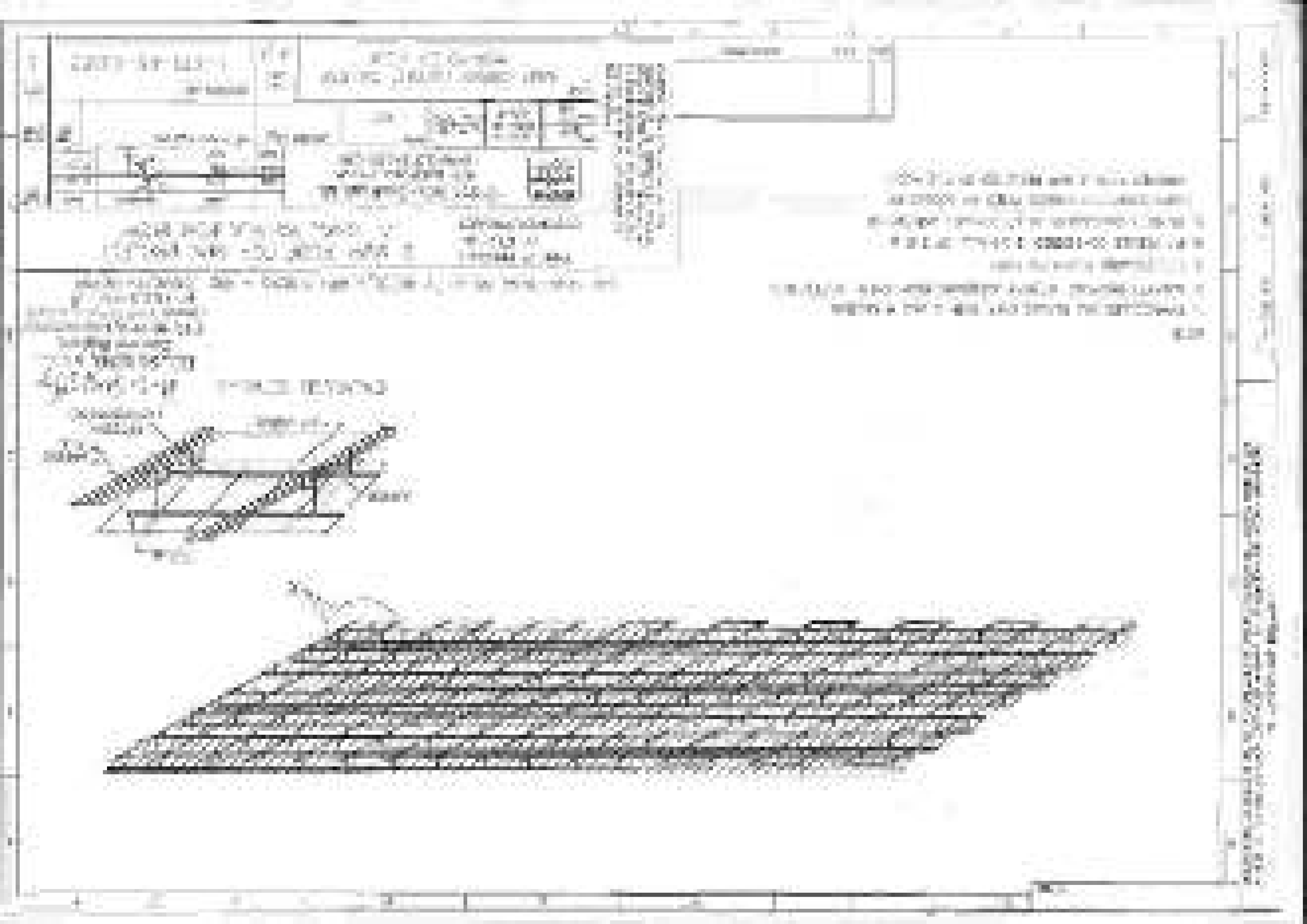

COPYRIGHT AND CONFIDENTIAL
THE INFORMATION ON THIS DOCUMENT IS THE PROPERTY OF BHARAT HEAVY ELECTRICALS LTD. IT MUST NOT BE USED DIRECTLY OR INDIRECTLY IN ANY WAY DETRIMENTAL TO THE INTEREST OF THE COMPANY.

DRG. No.

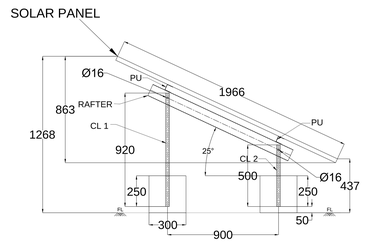

SIDE VIEW

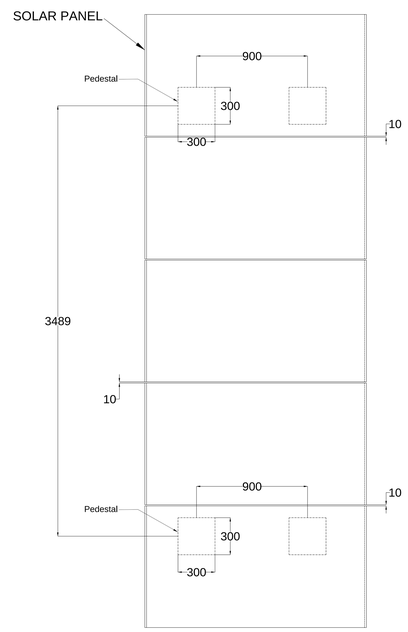

PLAN VIEW

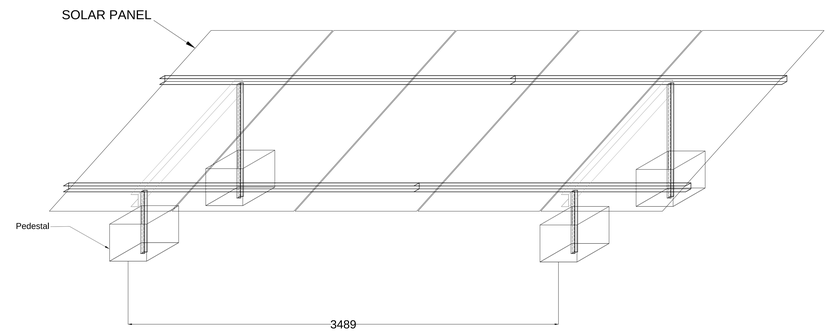

ISOMETRIC VIEW

PROJECT : 2MWp SOLAR POWER PROJECT
CUSTOMER : DMW PATIALA

REV.	DATE	ALTERED / CHECKED / APPROVED	REV.	DATE	ALTERED / CHECKED / APPROVED

	NAME	SIGN	DATE
DRAWN	NY		270417
CHECKED	PM		270417
APPROVED	MS		270417

DISTRIBUTION OF PRINTS

DEPT.	CODE
SC&PV	439

BHARAT HEAVY ELECTRICALS LIMITED.
ELECTRONICS DIVISION, BANGALORE

TITLE: GA OF MOUDLE MOUNTING STRUCTURE

No. OF SHEETS	01
SHEET No.	01
REV	00

BHEL DRG. No.

REF. DRG. No.
SIGN. & DATE
INVENTORY No.

[illegible]	[illegible]	[illegible]	[illegible]	[illegible]	[illegible]	[illegible]	[illegible]	[illegible]
[illegible]								
[illegible]								
[illegible]								

COPYRIGHT AND CONFIDENTIAL
THE INFORMATION ON THIS DOCUMENT IS THE PROPERTY OF BHARAT HEAVY ELECTRICALS LTD. IT MUST NOT BE USED DIRECTLY OR INDIRECTLY IN ANY WAY DETRIMENTAL TO THE INTEREST OF THE COMPANY.

DRG. No.

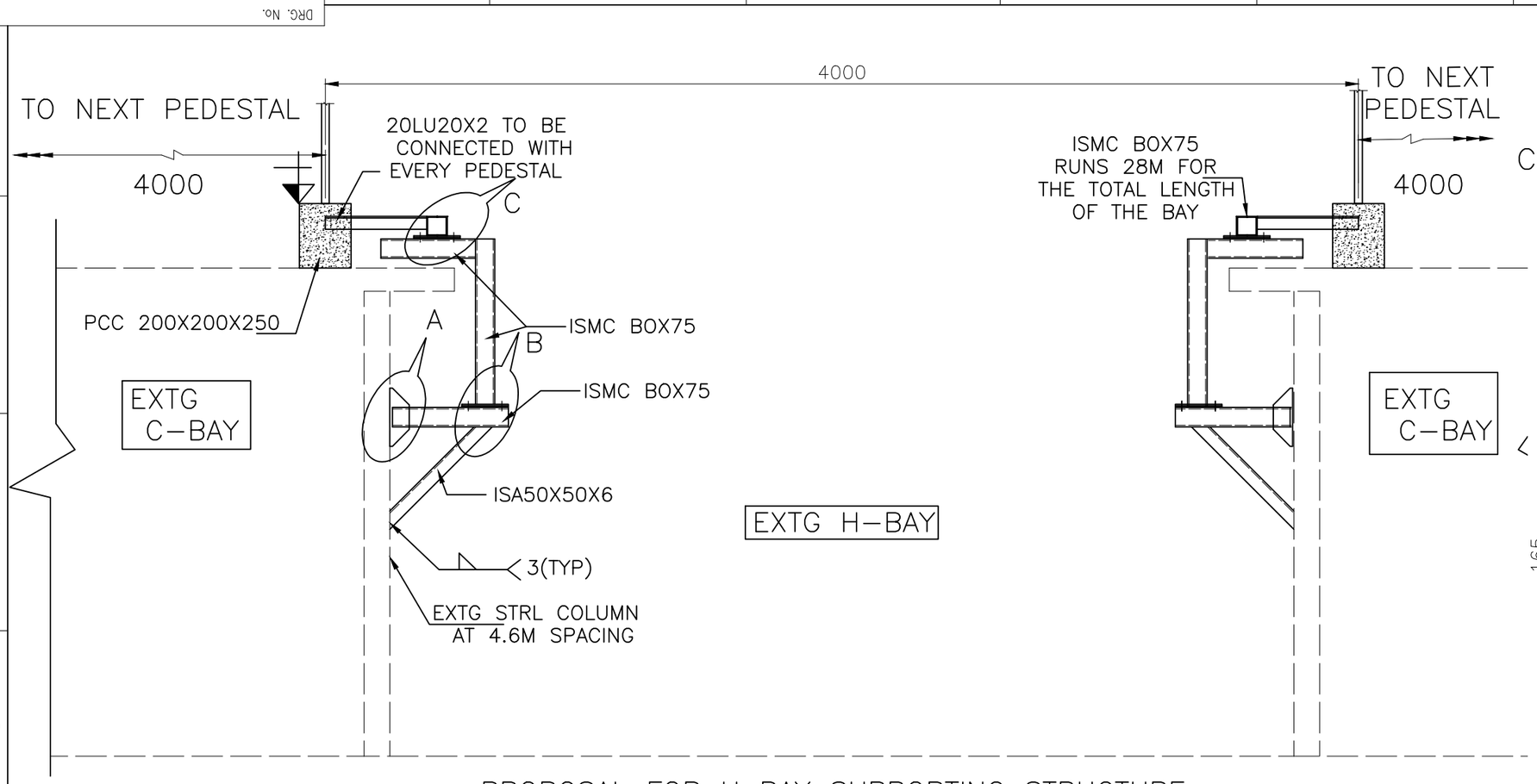

PROPOSAL FOR H BAY SUPPORTING STRUCTURE

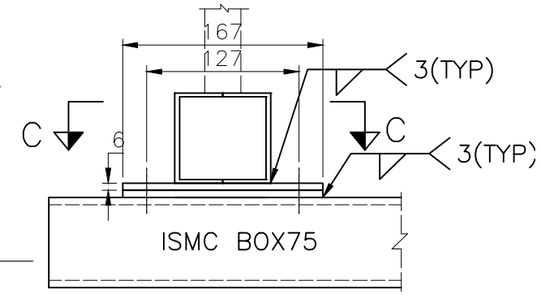

DETAIL-C

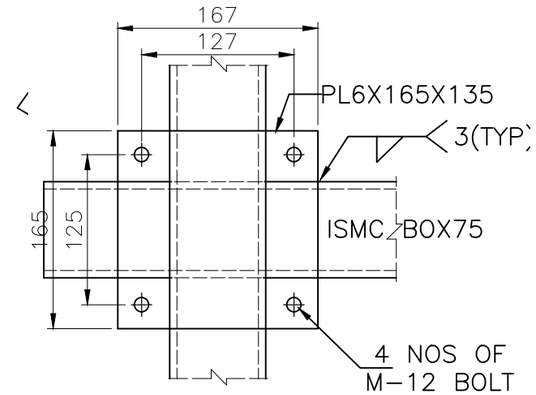

VIEW-CC

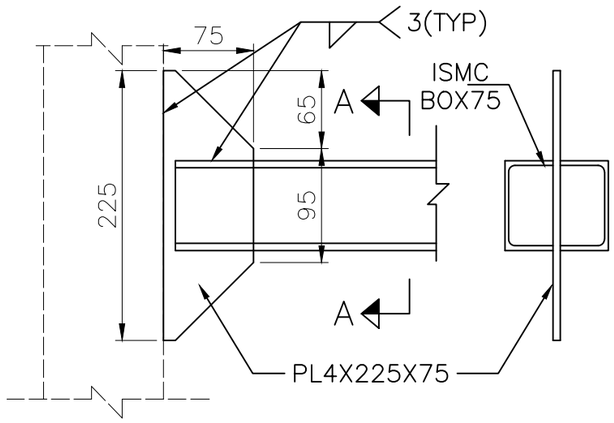

DETAIL-A

SEC-AA

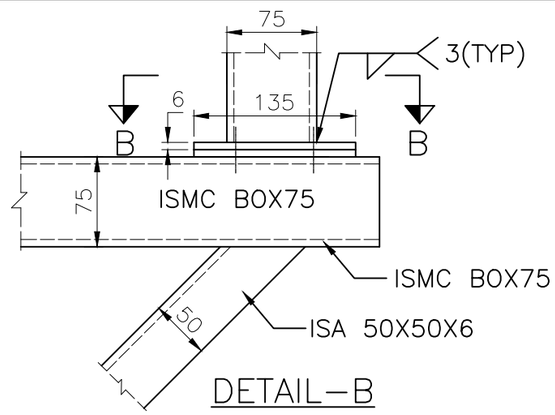

DETAIL-B

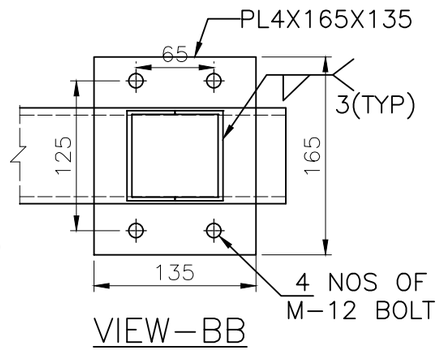

VIEW-BB

NOTES:

1. ALL THE DIMENSIONS ARE IN MM UNLESS OTHERWISE SPECIFIED.
2. DON'T SCALE THE DRAWING
3. BOM WILL BE MADE AT THE DETAILING STAGE.

PROJECT : 2 MWP ROOF TOP SPV PROJECT
CUSTOMER : AT DMW, PATIALA FOR IROAF

	NAME	SIGN	DATE
DRAWN	RPK		23-05-2017
CHECKED	PM		23-05-2017
APPROVED	MS		23-05-2017
DISTRIBUTION OF PRINTS			

DEPT.	CODE
SCPV	439

BHARAT HEAVY ELECTRICALS LIMITED.
ELECTRONICS DIVISION, BANGALORE

TITLE: CLAMPING ARRANGEMENT FOR H-TYPE ROOF MOUNTING MMS

No. OF SHEETS	01
SHEET No.	01
REV	0

DRG NO.

BHEL DRG. No. 1-679-05-00891

REF. DRG. No.

SIGN. & DATE

INVENTORY No.

COPYRIGHT AND CONFIDENTIAL
THE INFORMATION ON THIS DOCUMENT IS THE PROPERTY OF BHARAT HEAVY ELECTRICALS LTD. IT MUST NOT BE USED DIRECTLY OR INDIRECTLY IN ANY WAY DETRIMENTAL TO THE INTEREST OF THE COMPANY.

DRG. No. BH–DMW–ACCB 20

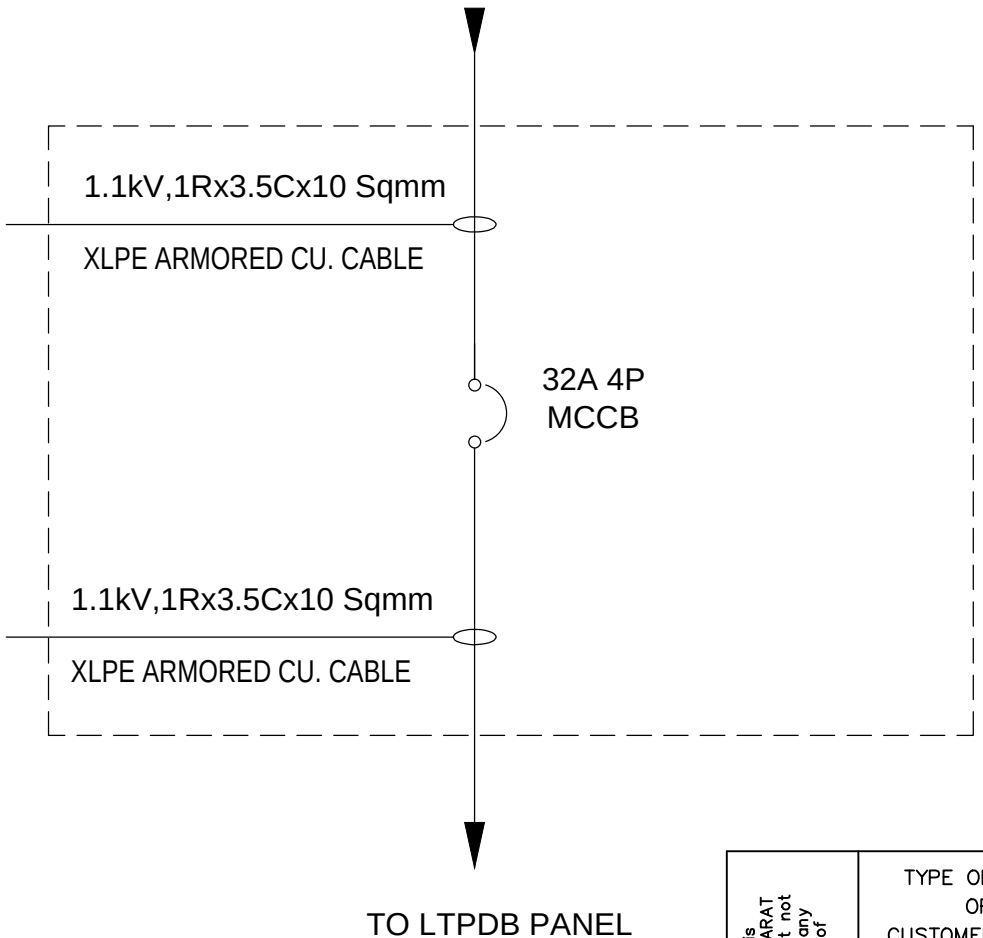

NOTE
THE FOLLOWING (NOT SHOWN IN THE SLD) ITEMS SHALL BE PROVIDED.
1. 16A/415V 4P MCCB.
2. PHASE INDICATION LAMPS.

REV	DATE	DESCRIPTION

CAUTION: The information on this document is the property of BHARAT HEAVY ELECTRICALS LTD. It must not be used directly or indirectly in any way detrimental to the interest of the company.

TYPE OF PRODUCT OR NAME OF CUSTOMER/PROJECT: 2 MWP ROOF TOP SPV PROJECT AT DMW, PATIALA FOR IROAF

Bharat Heavy Electricals Ltd
UNIT: ELECTRONICS DIVISION
BANGALORE–560 026

	NAME	SIGNATURE	DATE	NO. OF VAR
DRN	VCP		14–06–17	
CHD	PM		14–06–17	
APPD	MS		14–06–17	

DEPT	GRADE OF UNTOL. DIM		SCALE	WEIGHT (Kg)	REF TO ASSY / OLD DWG	ITEM NO	No OF ITEMS
SCPV	C/M/F		1:1				
CODE 439							

TITLE: SINGLE LINE DIAGRAM OF ACCB FOR 20KWP SPV PLANT

CARD CODE: U 01

DRAWING NO : BH–DMW–ACCB 20

REV: 0

REF. DRG. No.
SIGN. & DATE
INVENTORY No.

COPYRIGHT AND CONFIDENTIAL
THE INFORMATION ON THIS DOCUMENT IS THE PROPERTY OF BHARAT HEAVY ELECTRICALS LTD. IT MUST NOT BE USED DIRECTLY OR INDIRECTLY IN ANY WAY DETRIMENTAL TO THE INTEREST OF THE COMPANY.

DRG. No. BH–DMW–ACCB 30

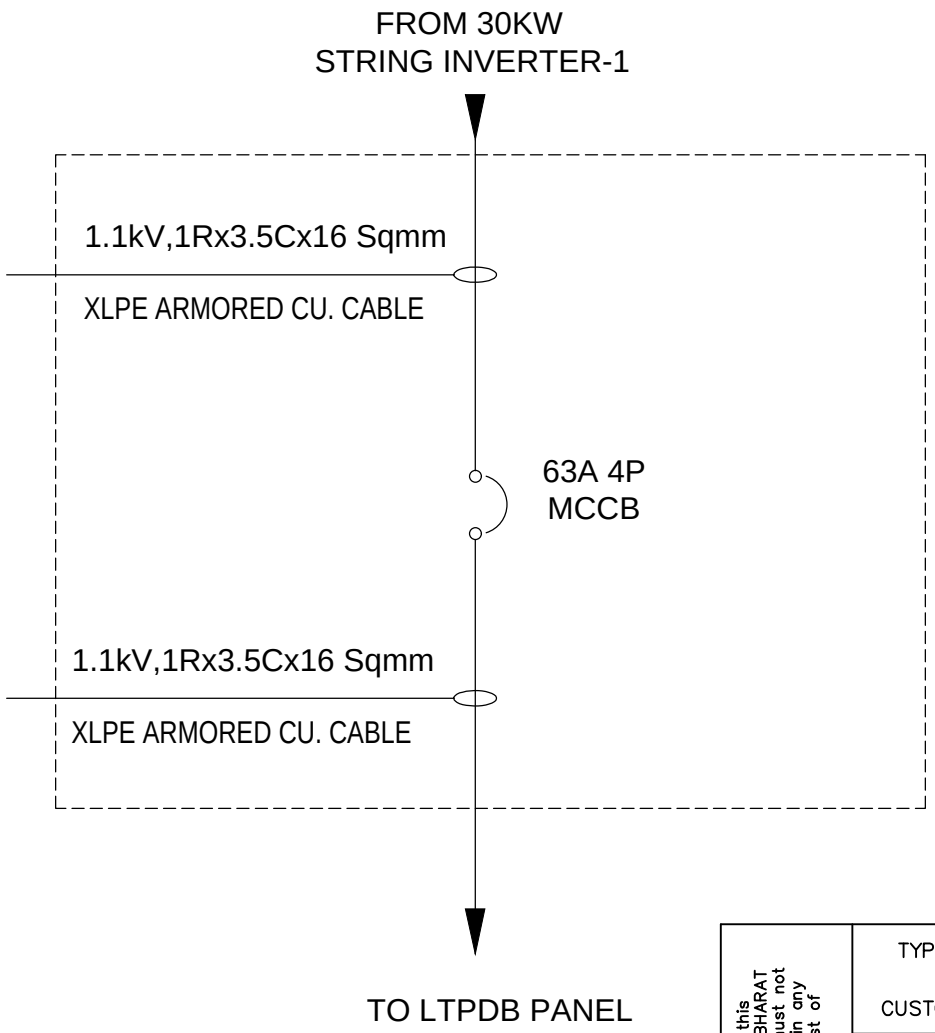

NOTE
THE FOLLOWING (NOT SHOWN IN THE SLD) ITEMS SHALL BE PROVIDED.
1. 16A/415V 4P MCCB.
2. PHASE INDICATION LAMPS.

REV	DATE	DESCRIPTION

CAUTION: The information on this document is the property of BHARAT HEAVY ELECTRICALS LTD. It must not be used directly or indirectly in any way detrimental to the interest of the company.

TYPE OF PRODUCT OR NAME OF CUSTOMER/PROJECT: 2 MWP ROOF TOP SPV PROJECT AT DMW, PATIALA FOR IROAF

Bharat Heavy Electricals Ltd
UNIT: ELECTRONICS DIVISION
BANGALORE–560 026

	NAME	SIGNATURE	DATE	NO. OF VAR
DRN	VCP		14–06–17	
CHD	PM		14–06–17	
APPD	MS		14–06–17	

DEPT	GRADE OF UNTOL. DIM		SCALE	WEIGHT (Kg)	REF TO ASSY / OLD DWG	ITEM NO	No OF ITEMS
SCPV	C/M/F		1:1				
CODE 439							

TITLE: SINGLE LINE DIAGRAM OF ACCB FOR 30KWP SPV PLANT

CARD CODE: U 01

DRAWING NO : BH–DMW–ACCB 30

REV: 0

REF. DRG. No.

SIGN. & DATE

INVENTORY No.

COPYRIGHT AND CONFIDENTIAL
THE INFORMATION ON THIS DOCUMENT IS THE PROPERTY OF BHARAT HEAVY ELECTRICALS LTD. IT MUST NOT BE USED DIRECTLY OR INDIRECTLY IN ANY WAY DETRIMENTAL TO THE INTEREST OF THE COMPANY.

DRG. No. BH-DMW-ACCB 50

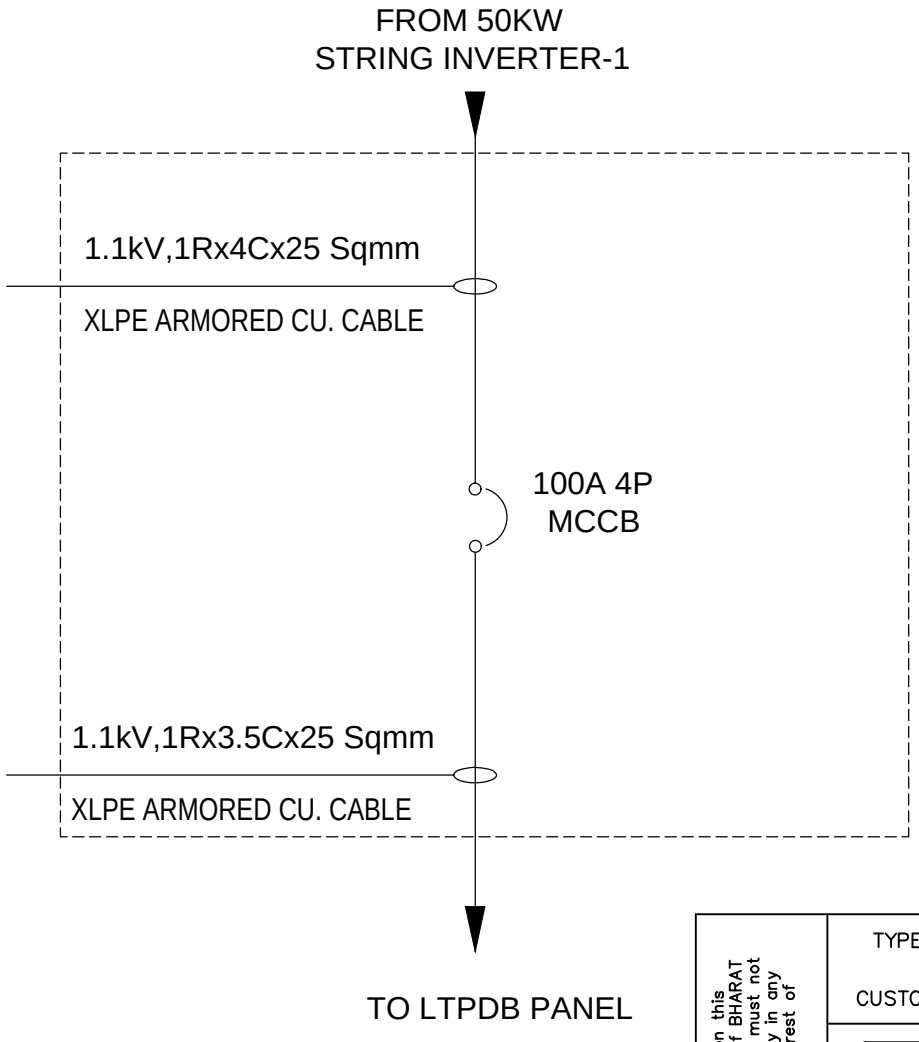

NOTE
THE FOLLOWING (NOT SHOWN IN THE SLD) ITEMS SHALL BE PROVIDED.
1. 16A/415V 4P MCCB.
2. PHASE INDICATION LAMPS.

REV	DATE	DESCRIPTION

CAUTION: The information on this document is the property of BHARAT HEAVY ELECTRICALS LTD. It must not be used directly or indirectly in any way detrimental to the interest of the company.

TYPE OF PRODUCT OR NAME OF CUSTOMER/PROJECT: 2 MWP ROOF TOP SPV PROJECT AT DMW, PATIALA FOR IROAF

Bharat Heavy Electricals Ltd
UNIT: ELECTRONICS DIVISION
BANGALORE-560 026

	NAME	SIGNATURE	DATE	NO. OF VAR
DRN	VCP		14-06-17	
CHD	PM		14-06-17	
APPD	MS		14-06-17	

DEPT	GRADE OF UNTOL. DIM		SCALE	WEIGHT (Kg)	REF TO ASSY / OLD DWG	ITEM NO	No OF ITEMS
SCPV	C/M/F		1:1				
CODE 439							

TITLE: SINGLE LINE DIAGRAM OF ACCB FOR 50KWP SPV PLANT

CARD CODE: U 01

DRAWING NO : BH-DMW-ACCB 50

REV: 0

REF. DRG. No.
SIGN. & DATE
INVENTORY No.

COPYRIGHT AND CONFIDENTIAL
THE INFORMATION ON THIS DOCUMENT IS THE PROPERTY OF BHARAT HEAVY ELECTRICALS LTD. IT MUST NOT BE USED DIRECTLY OR INDIRECTLY IN ANY WAY DETRIMENTAL TO THE INTEREST OF THE COMPANY.

DRG. No BH-DMW-ACCB 100

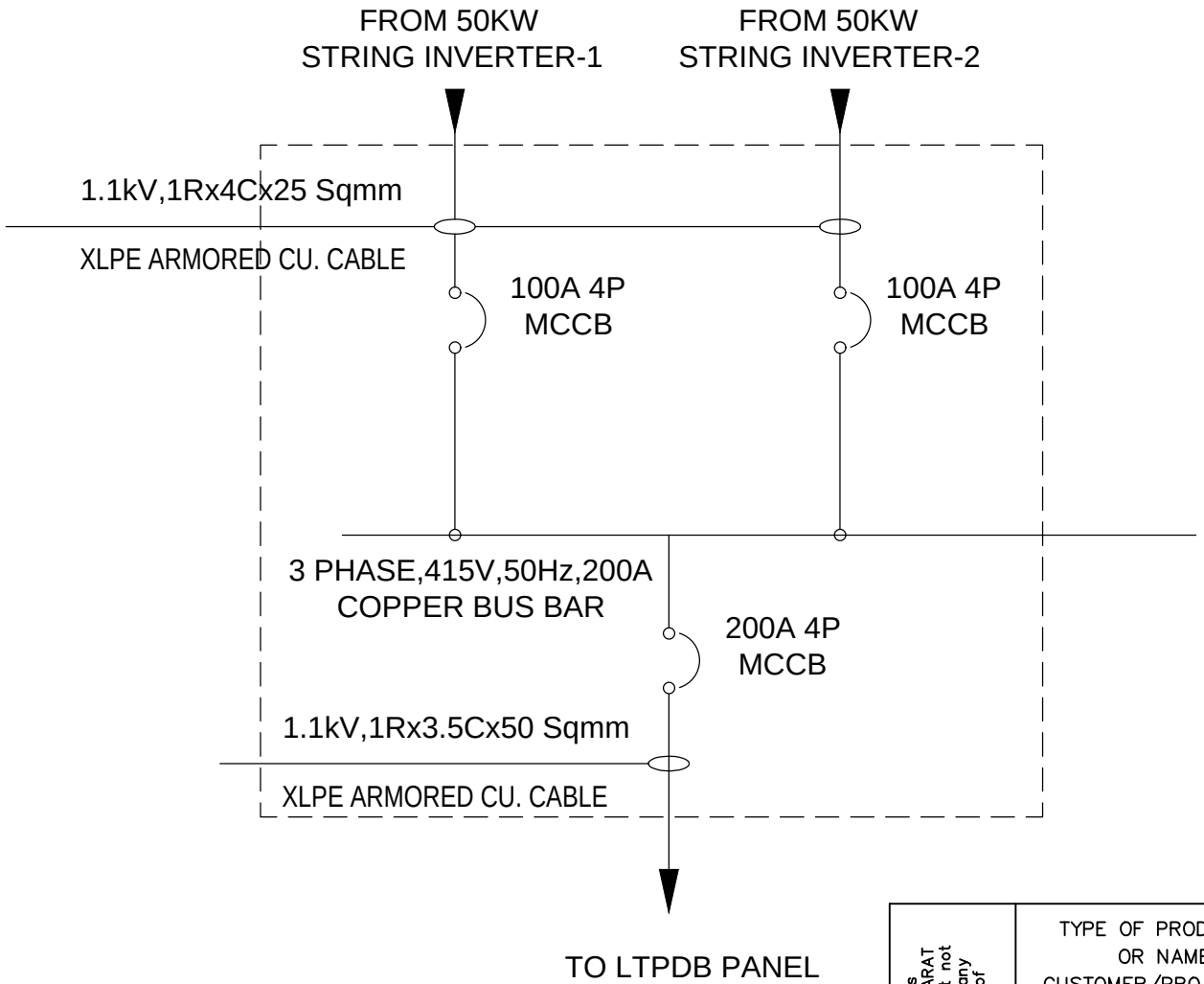

NOTE
THE FOLLOWING (NOT SHOWN IN THE SLD) ITEMS SHALL BE PROVIDED.
1. 16A/415V 4P MCCB.
2. PHASE INDICATION LAMPS.

REV	DATE	DESCRIPTION

CAUTION: The information on this document is the property of BHARAT HEAVY ELECTRICALS LTD. It must not be used directly or indirectly in any way detrimental to the interest of the company.

TYPE OF PRODUCT OR NAME OF CUSTOMER/PROJECT: 2 MWP ROOF TOP SPV PROJECT AT DMW, PATIALA FOR IROAF

Bharat Heavy Electricals Ltd
UNIT: ELECTRONICS DIVISION
BANGALORE-560 026

	NAME	SIGNATURE	DATE	NO. OF VAR
DRN	VCP		14-06-17	
CHD	PM		14-06-17	
APPD	MS		14-06-17	

DEPT	GRADE OF UNTOL. DIM		SCALE	WEIGHT (Kg)	REF TO ASSY / OLD DWG	ITEM NO	No OF ITEMS
SCPV	C/M/F		1:1				
CODE 439							

TITLE: SINGLE LINE DIAGRAM OF ACCB FOR 100KWP SPV PLANT

CARD CODE: U 01

DRAWING NO : BH-DMW-ACCB 100

REV: 0

REF. DRG. No.
SIGN. & DATE
INVENTORY No.

COPYRIGHT AND CONFIDENTIAL
THE INFORMATION ON THIS DOCUMENT IS THE PROPERTY OF BHARAT HEAVY ELECTRICALS LTD. IT MUST NOT BE USED DIRECTLY OR INDIRECTLY IN ANY WAY DETRIMENTAL TO THE INTEREST OF THE COMPANY.

DRG. No. BH-DMW-LTPDB 20

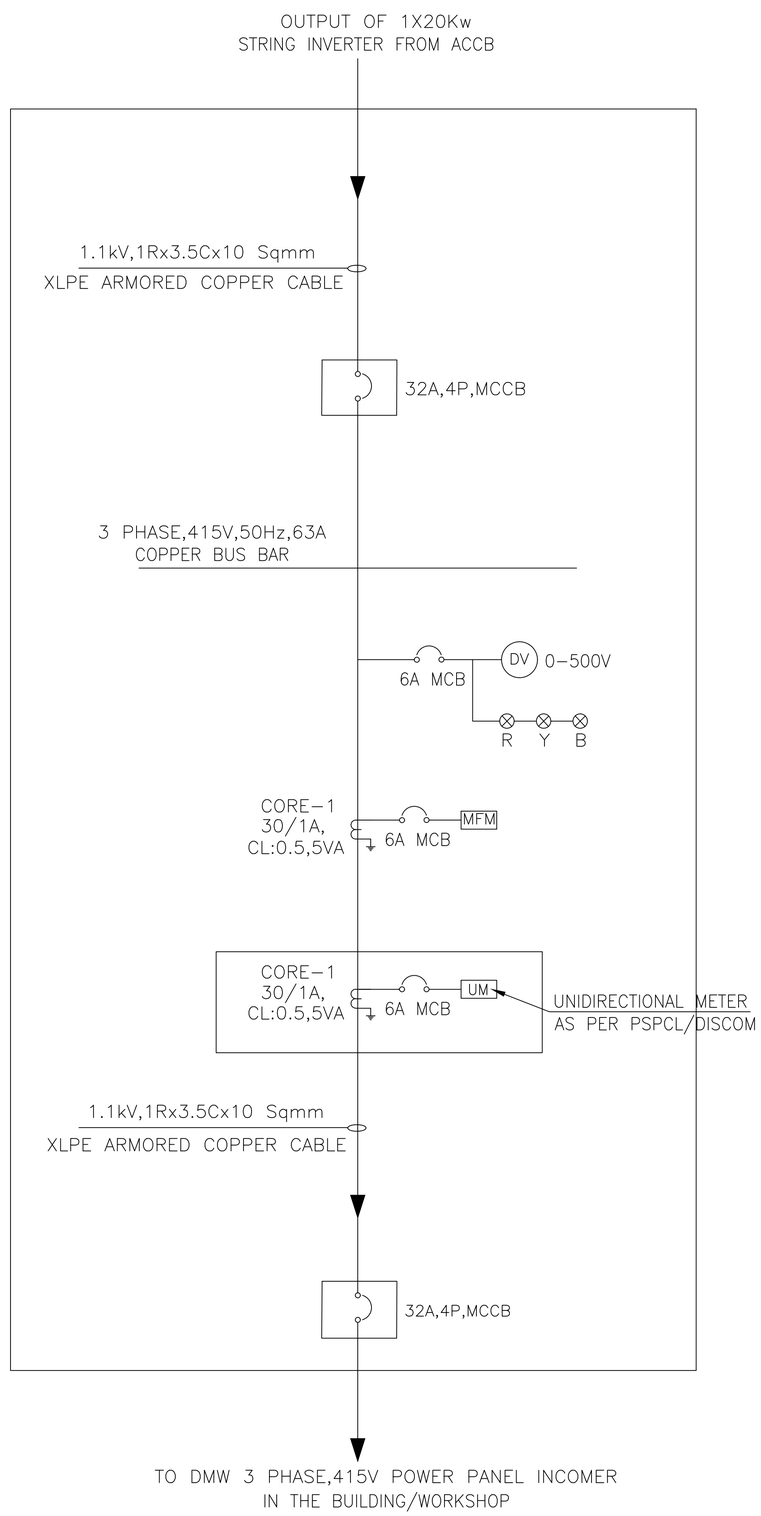

LEGEND DETAILS

SL. NO.	SYMBOL	DESCRIPTION
1		MCCB
2		CURRENT TRANSFORMER
3	MFM	MULTI FUNCTION METER
4	UM	UNIDIRECTIONAL METER AS PER DISCOM

REV	DATE	DESCRIPTION
01	03.07.17	LTPDB OUTPUT TERMINATION DETAILS REVISED.

CAUTION: The information on this document is the property of BHARAT HEAVY ELECTRICALS LTD. It must not be used directly or indirectly in any way detrimental to the interest of the company.

TYPE OF PRODUCT OR NAME OF CUSTOMER/PROJECT: 2 MWP ROOF TOP SPV PROJECT AT DMW, PATIALA FOR IROAF

Bharat Heavy Electricals Ltd
UNIT: ELECTRONICS DIVISION
BANGALORE–560 026

	NAME	SIGNATURE	DATE
DRN	VCP		14–06–17
CHD	PM		14–06–17
APPD	MS		14–06–17

NO. OF VAR

DEPT	GRADE OF UNTOL. DIM	SCALE	WEIGHT (Kg)	REF TO ASSY / OLD DWG	ITEM NO	No OF ITEMS
SCPV	C/M/F	1:1				1
CODE 439						

TITLE: SINGLE LINE DIAGRAM OF LTPDB FOR 20KWP SPV PLANT

CARD CODE: U 01

DRAWING NO : BH–DMW–LTPDB 20

REV: 0

REF. DRG. No.
SIGN. & DATE
INVENTORY No.

COPYRIGHT AND CONFIDENTIAL
THE INFORMATION ON THIS DOCUMENT IS THE PROPERTY OF BHARAT HEAVY ELECTRICALS LTD. IT MUST NOT BE USED DIRECTLY OR INDIRECTLY IN ANY WAY DETRIMENTAL TO THE INTEREST OF THE COMPANY.

DRG. No. BH-DMW-LTPDB 30

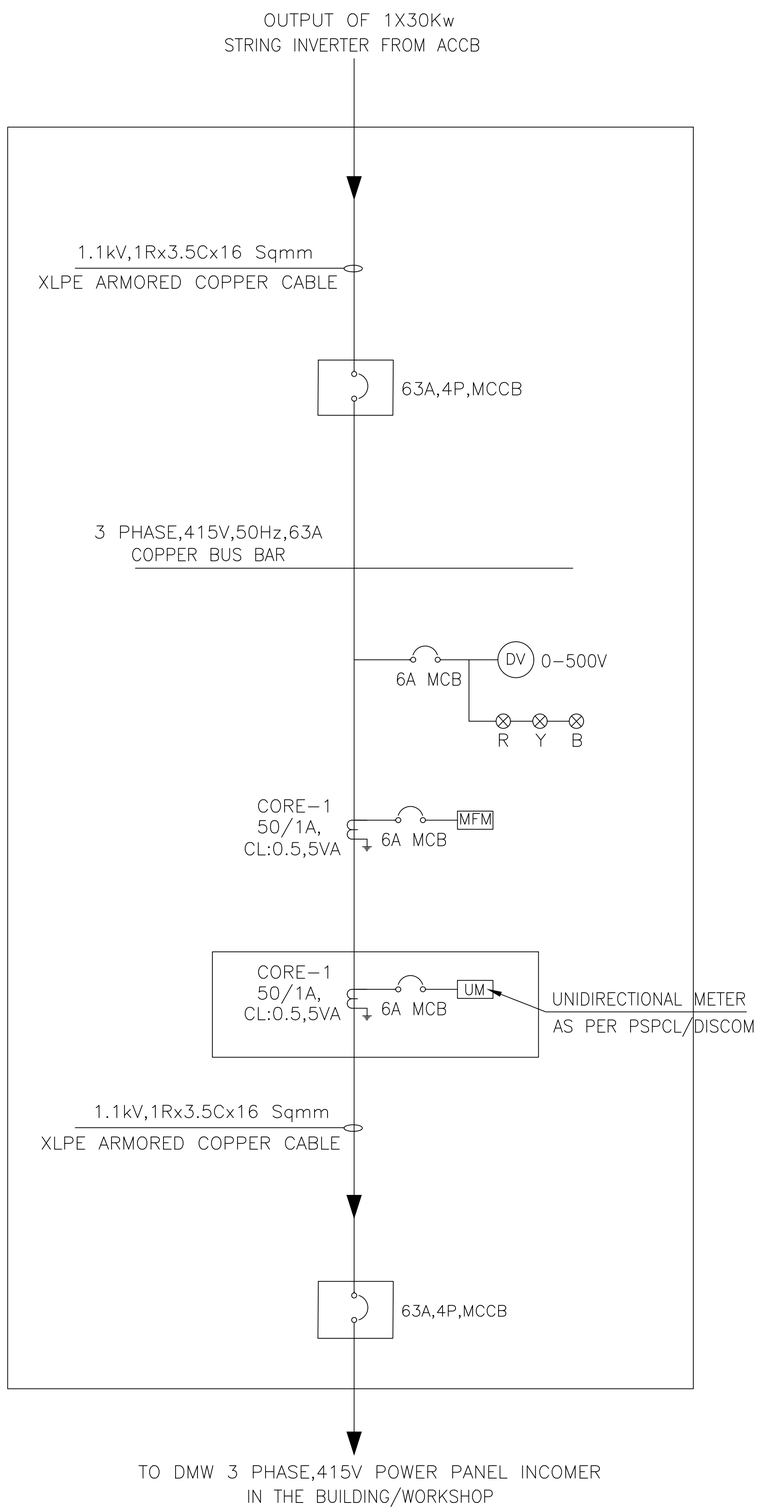

LEGEND DETAILS

SL. NO.	SYMBOL	DESCRIPTION
1		MCCB
2		CURRENT TRANSFORMER
3	MFM	MULTI FUNCTION METER
4	UM	UNIDIRECTIONAL METER AS PER DISCOM

REV	DATE	DESCRIPTION
01	03.07.17	LTPDB OUTPUT TERMINATION DETAILS REVISED.

CAUTION: The information on this document is the property of BHARAT HEAVY ELECTRICALS LTD. It must not be used directly or indirectly in any way detrimental to the interest of the company.

TYPE OF PRODUCT OR NAME OF CUSTOMER/PROJECT: 2 MWP ROOF TOP SPV PROJECT AT DMW, PATIALA FOR IROAF

Bharat Heavy Electricals Ltd
UNIT: ELECTRONICS DIVISION
BANGALORE-560 026

	NAME	SIGNATURE	DATE
DRN	VCP		14-06-17
CHD	PM		14-06-17
APPD	MS		14-06-17

NO. OF VAR

DEPT	GRADE OF UNTOL. DIM	SCALE	WEIGHT (Kg)	REF TO ASSY / OLD DWG	ITEM NO	No OF ITEMS
SCPV	C/M/F	1:1				1
CODE 439						

TITLE: SINGLE LINE DIAGRAM OF LTPDB FOR 30KWP SPV PLANT

CARD CODE: U 01

DRAWING NO : BH-DMW-LTPDB 30

REV: 01

REF. DRG. No.
SIGN. & DATE
INVENTORY No.

COPYRIGHT AND CONFIDENTIAL
THE INFORMATION ON THIS DOCUMENT IS THE PROPERTY OF BHARAT HEAVY ELECTRICALS LTD. IT MUST NOT BE USED DIRECTLY OR INDIRECTLY IN ANY WAY DETRIMENTAL TO THE INTEREST OF THE COMPANY.

DRG. No. BH-DMW-LTPDB 50

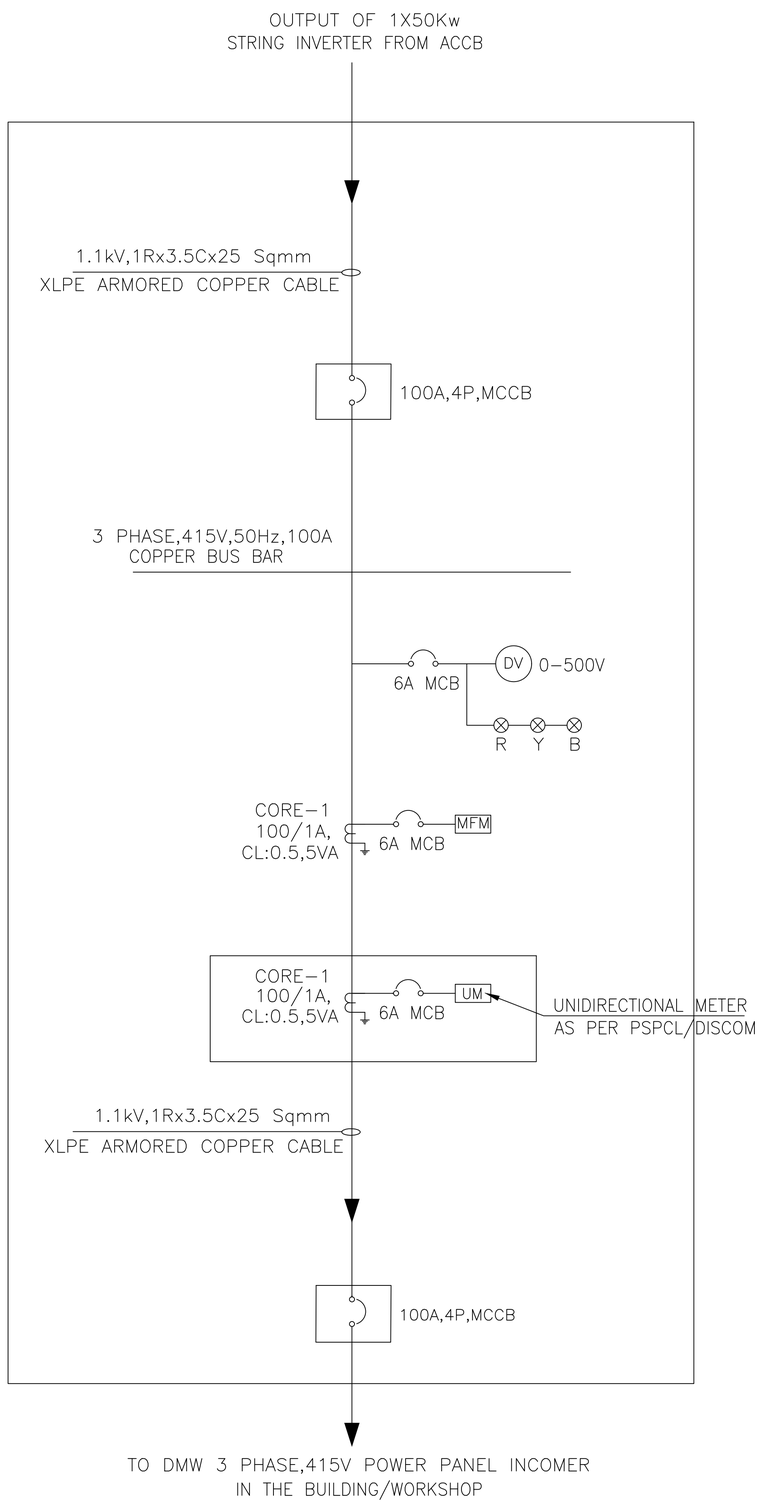

LEGEND DETAILS

SL. NO.	SYMBOL	DESCRIPTION
1		MCCB
2		CURRENT TRANSFORMER
3	MFM	MULTI FUNCTION METER
4	UM	UNIDIRECTIONAL METER AS PER DISCOM

REV	DATE	DESCRIPTION
01	03.07.17	LTPDB OUTPUT TERMINATION DETAILS REVISED.

CAUTION: The information on this document is the property of BHARAT HEAVY ELECTRICALS LTD. It must not be used directly or indirectly in any way detrimental to the interest of the company.

TYPE OF PRODUCT OR NAME OF CUSTOMER/PROJECT: 2 MWP ROOF TOP SPV PROJECT AT DMW, PATIALA FOR IROAF

Bharat Heavy Electricals Ltd
UNIT: ELECTRONICS DIVISION
BANGALORE-560 026

	NAME	SIGNATURE	DATE	NO. OF VAR
DRN	VCP		14-06-17	
CHD	PM		14-06-17	
APPD	MS		14-06-17	

DEPT	GRADE OF UNTOL. DIM		SCALE	WEIGHT (Kg)	REF TO ASSY / OLD DWG	ITEM NO	No OF ITEMS
SCPV	C/M/F		1:1				1
CODE 439							

TITLE: SINGLE LINE DIAGRAM OF LTPDB FOR 50KWP SPV PLANT

CARD CODE: U 01

DRAWING NO : BH-DMW-LTPDB 50

REV: 01

REF. DRG. No.
SIGN. & DATE
INVENTORY No.

COPYRIGHT AND CONFIDENTIAL
THE INFORMATION ON THIS DOCUMENT IS THE PROPERTY OF BHARAT HEAVY ELECTRICALS LTD. IT MUST NOT BE USED DIRECTLY OR INDIRECTLY IN ANY WAY DETRIMENTAL TO THE INTEREST OF THE COMPANY.

DRG. No. BH-DMW-LTPDB 100

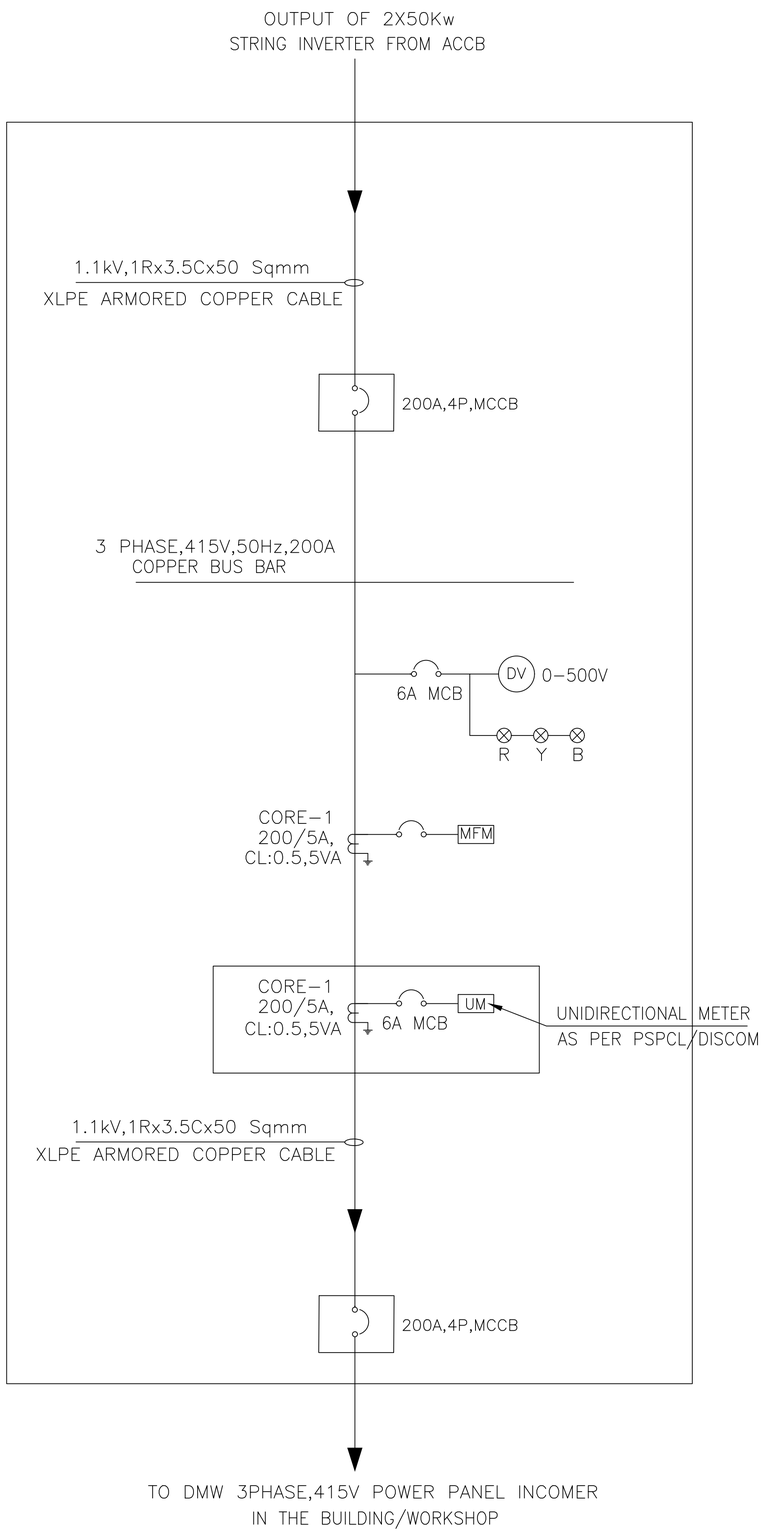

LEGEND DETAILS

SL. NO.	SYMBOL	DESCRIPTION
1		MCCB
2		CURRENT TRANSFORMER
3	MFM	MULTI FUNCTION METER
4	UM	UNIDIRECTIONAL METER AS PER DISCOM

REV	DATE	DESCRIPTION
01	03.07.17	LTPDB OUTPUT TERMINATION DETAILS REVISED.

CAUTION: The information on this document is the property of BHARAT HEAVY ELECTRICALS LTD. It must not be used directly or indirectly in any way detrimental to the interest of the company.

TYPE OF PRODUCT OR NAME OF CUSTOMER/PROJECT: 2 MWP ROOF TOP SPV PROJECT AT DMW, PATIALA FOR IROAF

Bharat Heavy Electricals Ltd
UNIT: ELECTRONICS DIVISION
BANGALORE-560 026

	NAME	SIGNATURE	DATE
DRN	VCP		14-06-17
CHD	PM		14-06-17
APPD	MS		14-06-17

NO. OF VAR

DEPT	GRADE OF UNTOL. DIM	SCALE	WEIGHT (Kg)	REF TO ASSY / OLD DWG	ITEM NO	No OF ITEMS
SCPV	C/M/F	1:1				1
CODE 439						

TITLE: SINGLE LINE DIAGRAM OF LTPDB FOR 100KWP SPV PLANT

CARD CODE: U 01

DRAWING NO : BH-DMW-LTPDB 100

REV: 01

REF. DRG. No.
SIGN. & DATE
INVENTORY No.

THE INFORMATION ON THIS DOCUMENT IS THE PROPERTY OF BHARAT HEAVY ELECTRICALS LTD. IT MUST NOT BE USED DIRECTLY OR INDIRECTLY IN ANY WAY DETRIMENTAL TO THE INTEREST OF THE COMPANY.

DRG. No. BH-DMW-SLD 20

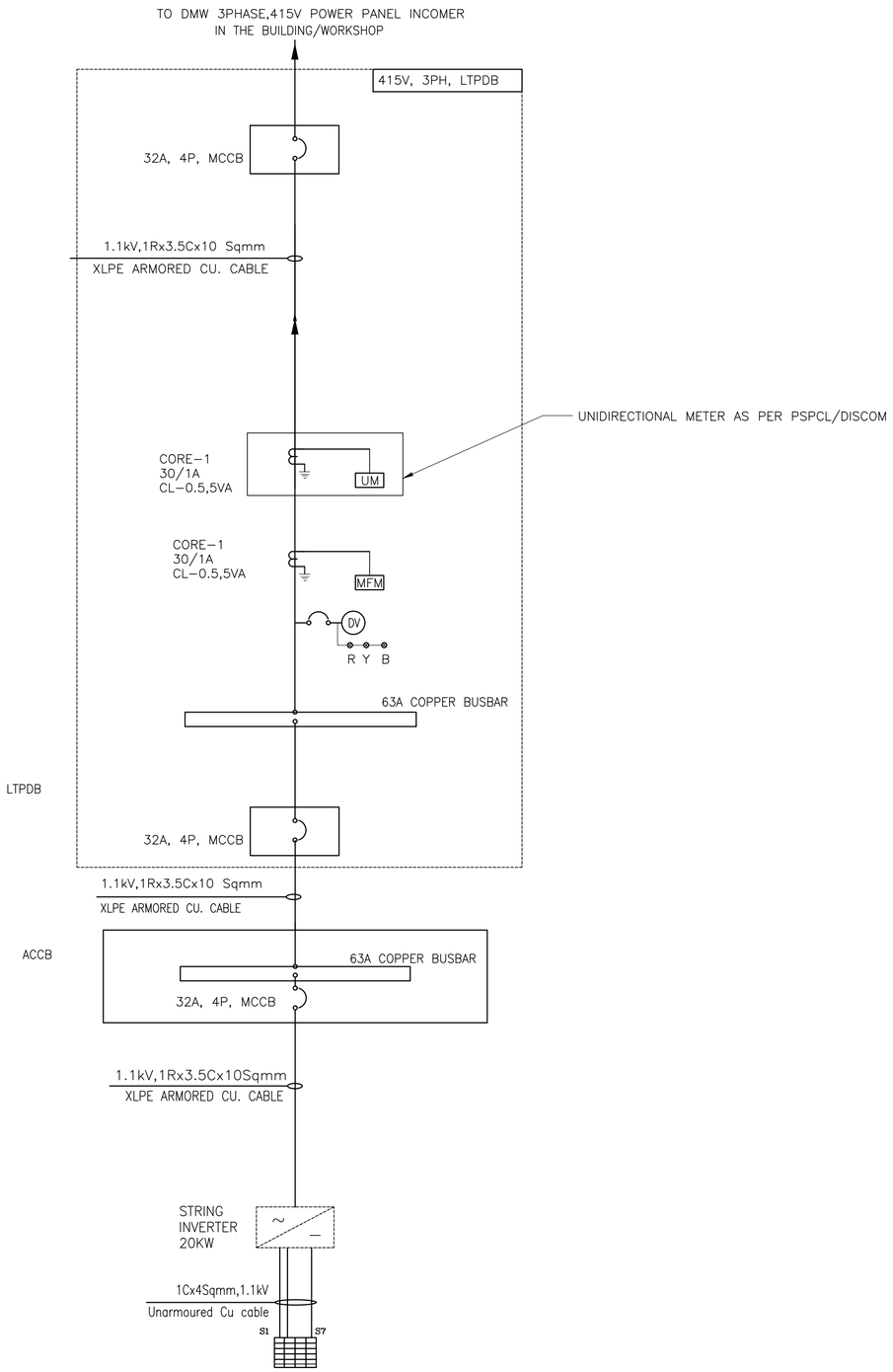

LEGEND DETAILS

SL. NO.	SYMBOL	DESCRIPTION
1	MFM	MULTI FUNCTION METER
2		CURRENT TRANSFORMER
3	~ / —	STRING INVERTER
3	UM	UNIDIRECTIONAL METER AS PER PSPCL/DISCOM

PROJECT: 2 MWP ROOF TOP SPV PROJECT AT DMW, PATIALA FOR IROAF

CUSTOMER:

BHARAT HEAVY ELECTRICALS LIMITED.
ELECTRONICS DIVISION, BANGALORE

TITLE: SINGLE LINE DIAGRAM OF 20KWP SPV PLANT

DRG. No. BH-DMW-SLD 20

REV.	DATE	ALTERED / CHECKED / APPROVED	REV.	DATE	ALTERED / CHECKED / APPROVED
			01	03.07.17	LTPDB OUTPUT TERMINATION DETAILS REVISED.

REV	00	DATE	14.06.17
VCP	PM	MS	
INITIAL / SIGN	INITIAL / SIGN	INITIAL / SIGN	
PRPD.BY	CHEKD.BY	APPRD.BY	

DEPT. 439 | CODE SC&PV

No. OF SHEETS: 01
SHEET No.: 01
REV 01

SIGN. & DATE

INVENTORY No.

THE INFORMATION ON THIS DOCUMENT IS THE PROPERTY OF BHARAT HEAVY ELECTRICALS LTD. IT MUST NOT BE USED DIRECTLY OR INDIRECTLY IN ANY WAY DETRIMENTAL TO THE INTEREST OF THE COMPANY.

DRG. No. BH-DMW-SLD 30

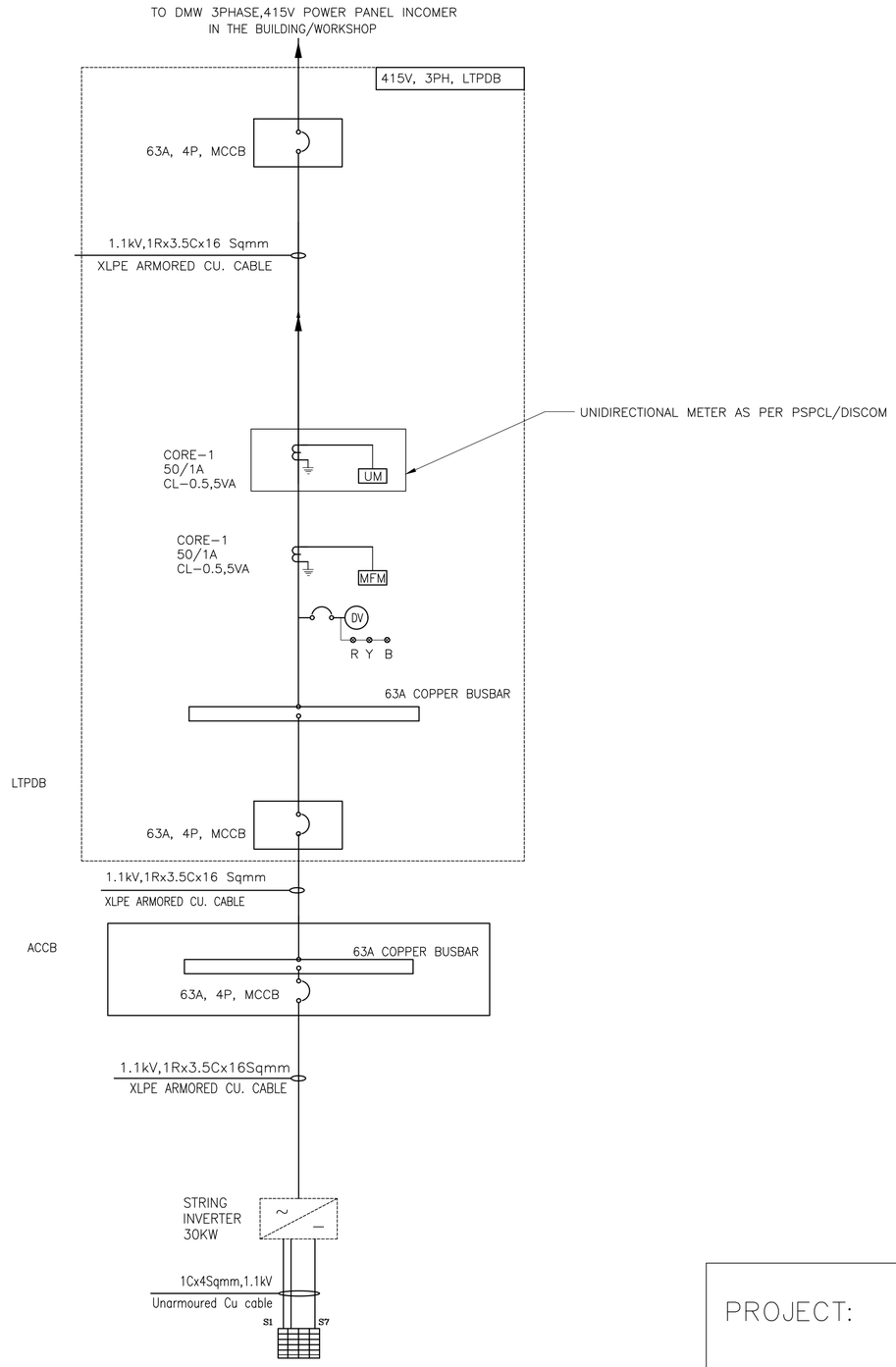

LEGEND DETAILS

SL. NO.	SYMBOL	DESCRIPTION
1	MFM	MULTI FUNCTION METER
2		CURRENT TRANSFORMER
3		STRING INVERTER
3	UM	UNIDIRECTIONAL METER AS PER PSPCL/DISCOM

PROJECT: 2 MWP ROOF TOP SPV PROJECT AT DMW, PATIALA FOR IROAF

CUSTOMER:

REV.	DATE	ALTERED / CHECKED / APPROVED	REV.	DATE	ALTERED / CHECKED / APPROVED
			01	03.07.17	LTPDB OUTPUT TERMINATION DETAILS REVISED.

REV	00	DATE	14.06.17
VCP	PM	MS	
INITIAL / SIGN	INITIAL / SIGN	INITIAL / SIGN	
PRPD.BY	CHEKD.BY	APPRD.BY	

DEPT. 439 | CODE SC&PV

BHARAT HEAVY ELECTRICALS LIMITED.
ELECTRONICS DIVISION, BANGALORE

TITLE: SINGLE LINE DIAGRAM OF 30KWP SPV PLANT

No. OF SHEETS: 01

SHEET No.: 01

DRG. No. BH-DMW-SLD 30

REV 01

SIGN. & DATE

INVENTORY No.

THE INFORMATION ON THIS DOCUMENT IS THE PROPERTY OF BHARAT HEAVY ELECTRICALS LTD. IT MUST NOT BE USED DIRECTLY OR INDIRECTLY IN ANY WAY DETRIMENTAL TO THE INTEREST OF THE COMPANY.

DRG. No. BH-DMW-SLD 50

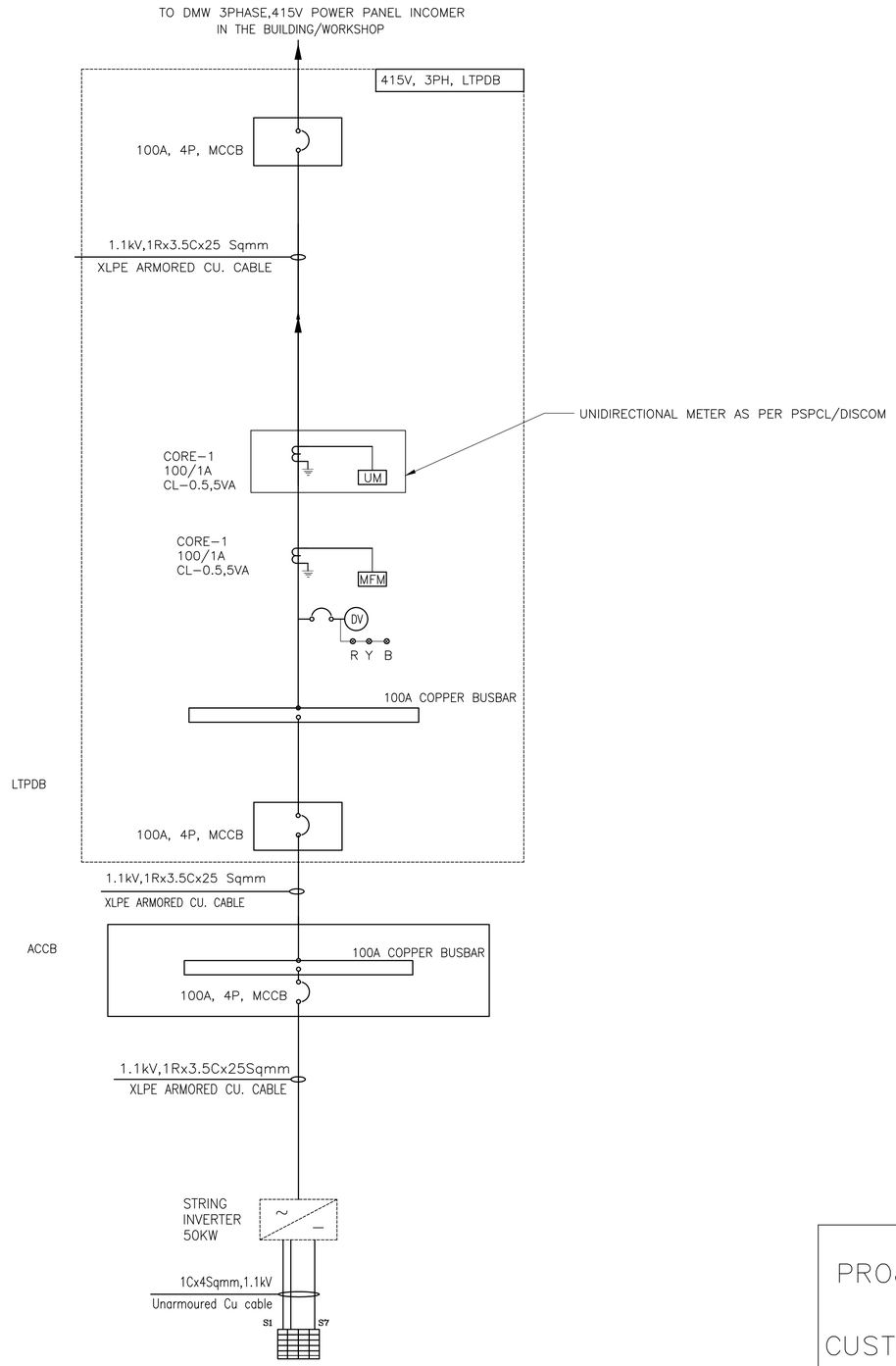

LEGEND DETAILS

SL. NO.	SYMBOL	DESCRIPTION
1	MFM	MULTI FUNCTION METER
2		CURRENT TRANSFORMER
3	~ / —	STRING INVERTER
3	UM	UNIDIRECTIONAL METER AS PER PSPCL/DISCOM

PROJECT: 2 MWP ROOF TOP SPV PROJECT AT DMW, PATIALA FOR IROAF

CUSTOMER:

REV.	DATE	ALTERED / CHECKED / APPROVED	REV.	DATE	ALTERED / CHECKED / APPROVED
			01	03.07.17	LTPDB OUTPUT TERMINATION DETAILS REVISED.

REV	00	DATE	14.06.17
VCP		PM		MS	
INITIAL	SIGN	INITIAL	SIGN	INITIAL	SIGN
PRPD.BY		CHEKD.BY		APPRD.BY	

DEPT. 439 | CODE SC&PV

BHARAT HEAVY ELECTRICALS LIMITED.
ELECTRONICS DIVISION, BANGALORE

TITLE: SINGLE LINE DIAGRAM OF 50KWP SPV PLANT

No. OF SHEETS: 01

SHEET No.: 01

DRG. No. BH-DMW-SLD 50

REV 01

SIGN. & DATE

INVENTORY No.

THE INFORMATION ON THIS DOCUMENT IS THE PROPERTY OF BHARAT HEAVY ELECTRICALS LTD. IT MUST NOT BE USED DIRECTLY OR INDIRECTLY IN ANY WAY DETRIMENTAL TO THE INTEREST OF THE COMPANY.

DRG. No. BH-DMW-SLD 100

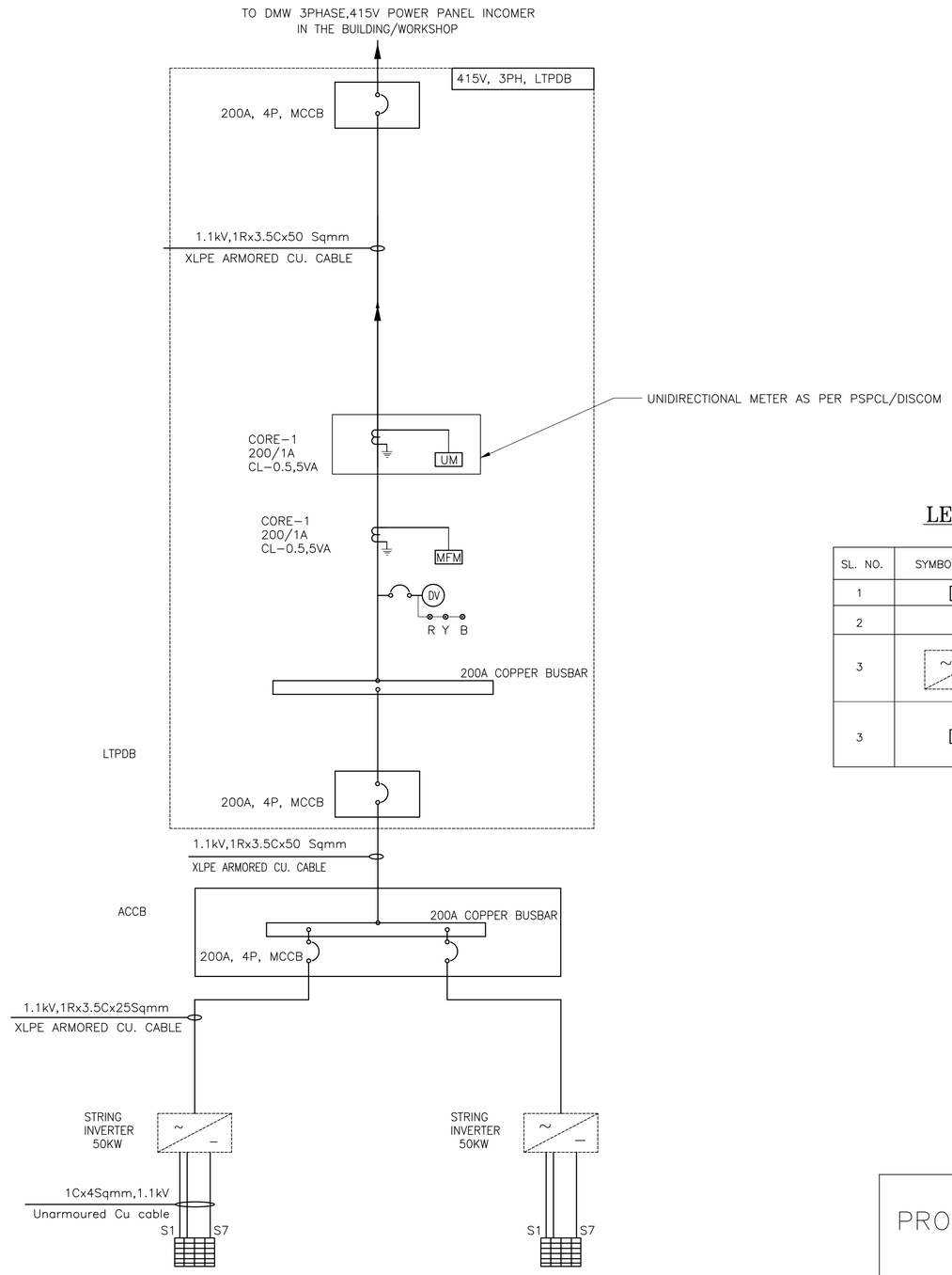

LEGEND DETAILS

SL. NO.	SYMBOL	DESCRIPTION
1	MFM	MULTI FUNCTION METER
2		CURRENT TRANSFORMER
3	~ / —	STRING INVERTER
3	UM	UNIDIRECTIONAL METER AS PER PSPCL/DISCOM

PROJECT: 2 MWP ROOF TOP SPV PROJECT AT DMW, PATIALA FOR IROAF

CUSTOMER:

REV.	DATE	ALTERED / CHECKED / APPROVED	REV.	DATE	ALTERED / CHECKED / APPROVED
			01	03.07.17	LTPDB OUTPUT TERMINATION DETAILS REVISED.

REV	00	DATE	14.06.17
VCP	PM	MS	
INITIAL / SIGN	INITIAL / SIGN	INITIAL / SIGN	
PRPD.BY	CHEKD.BY	APPRD.BY	

DEPT. 439 | CODE SC&PV

BHARAT HEAVY ELECTRICALS LIMITED.
ELECTRONICS DIVISION, BANGALORE

TITLE: SINGLE LINE DIAGRAM OF 100KWP SPV PLANT

No. OF SHEETS: 01
SHEET No.: 01

DRG. No. BH-DMW-SLD 100

REV 01

SIGN. & DATE

INVENTORY No.

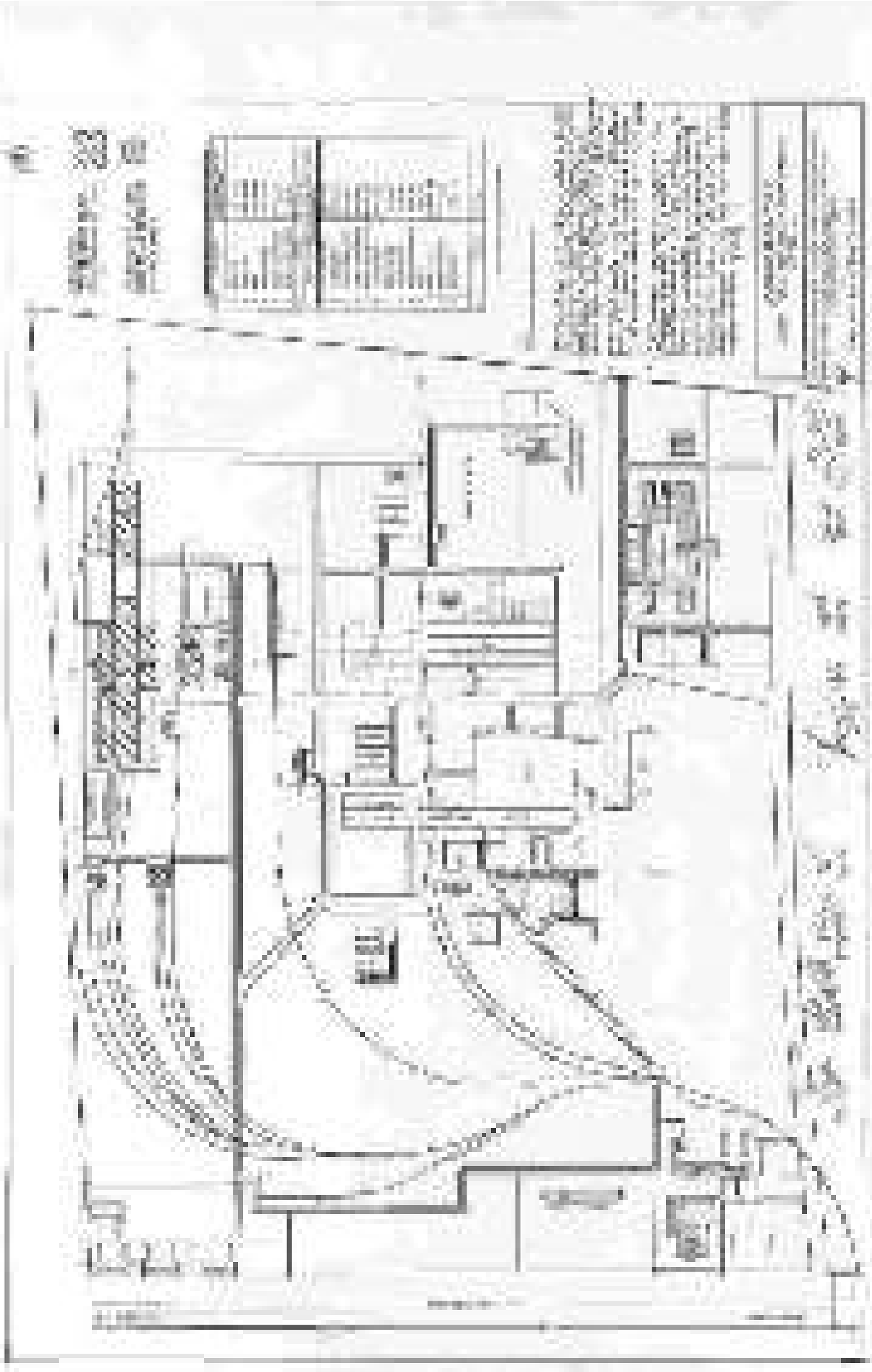

Annexure to tender No. _____

To

BHEL EDN

Bangalore

Dear Sir/Madam,

Subject : Execution of Roof top Solar Power Plant at DMW, Patiala for BHEL EDN – regarding

Carrying out of site visit for location survey for submitting offer to NIT

We hereby declare that as per the NIT technical specification clause, we have visited the DMW Patiala premises and carried out examination of the locations identified for the establishment of roof top SPV systems as detailed in the BHEL NIT No. _____ and satisfied ourselves fully regarding the input details to be considered for submitting Technical offer against the NIT.

For and On behalf of

(Sign and Company seal of Vendor)

Place :

Date: